HP ZBook 8 G2a 16 inch Mobile Workstation PC

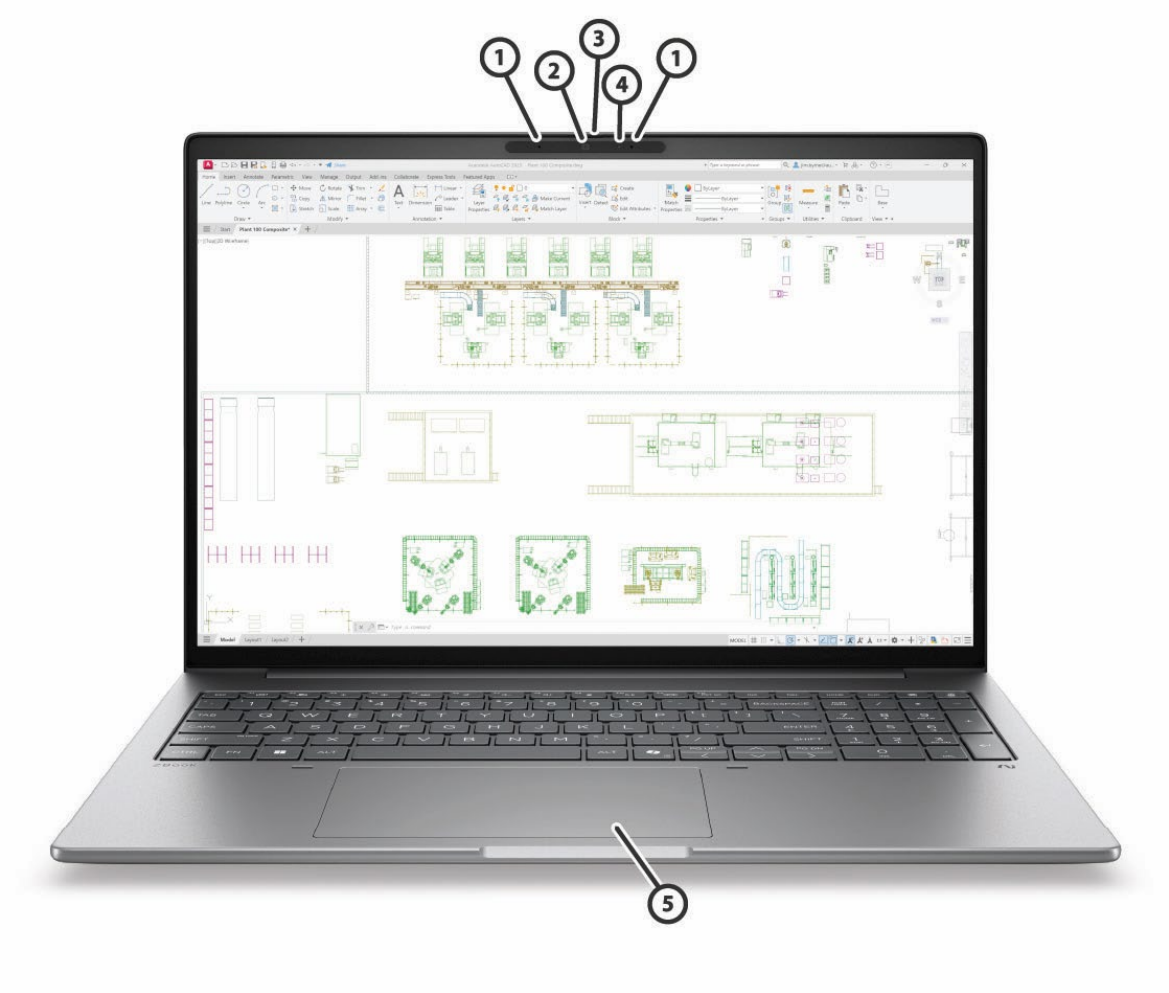

Front

1	Internal Microphone (2)	4	Webcam LED
2	Webcam	5	Touchpad
3	Camera Shutter		

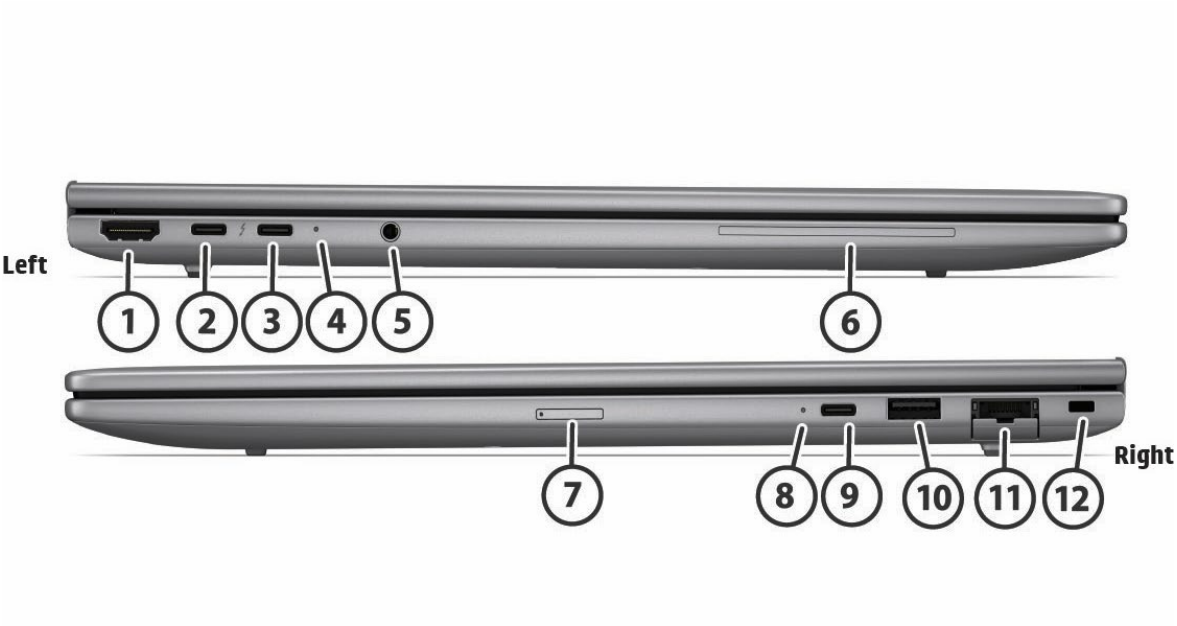

Sides

1	HDMI 2.1	7	Nano SIM card slot (optional)
2	Thunderbolt™ 4 with (USB Power Delivery, DisplayPort™ 2.1) [1]	8	Power Indicator LED
3	Thunderbolt™ 4 with (USB Power Delivery, DisplayPort™ 2.1) [1]	9	USB Type-C® 10Gbps signaling rate (USB Power Delivery, DisplayPort™ 1.4)
4	Power Indicator LED	10	USB Type-A 5Gbps signaling rate (Data only)
5	Headphone/mic combo jack	11	RJ45 Ethernet port
6	Smart Card Reader (optional)	12	Nano Security Lock slot

1. USB 20Gbps signaling rate is not available with Thunderbolt™ 4. Actual throughput may vary.

PRODUCT NAME

HP ZBook 8 G2a 16 inch Mobile Workstation PC

OPERATING SYSTEM

Preinstalled

FreeDOS

Ubuntu Linux 24.04

Windows 11 Home - HP recommends Windows 11 Pro for business [1]

Windows 11 Home Single Language - HP recommends Windows 11 Pro for business [1]

Windows 11 Pro [1]

Windows 11 Pro (Windows 11 Enterprise available with a Volume Licensing Agreement) [1]

1. Not all features are available in all editions or versions of Windows. Systems may require upgraded and/or separately purchased hardware, drivers, software or BIOS update to take full advantage of Windows functionality. Windows is automatically updated and enabled. High speed internet and Microsoft account required. ISP fees may apply and additional requirements may apply over time for updates. See http://www.windows.com

PROCESSORS

Processor	Cores	Threads	L3 Cache	Max Boost Frequency	Base Frequency	Pro	NPU
AMD Ryzen™ AI 7 PRO 450 processor [2,3,4,5]	8 cores	16	16 MB	5.10 GHz	2.00 GHz	X	50 TOPS
AMD Ryzen™ AI 5 PRO 440 processor [2,3,4,5]	6 cores	12	16 MB	4.80 GHz	2.00 GHz	X	50 TOPS
AMD Ryzen™ AI 5 PRO 435 processor [2,3,4,5]	6 cores	12	8 MB	4.80 GHz	2.00 GHz	X	50 TOPS
AMD Ryzen AI 9 HX PRO 470 processor [2,3,4,5]	12 cores	24	24 MB	5.2GHz	2.0GHz	X	55 TOPs

Processor Family

AMD Ryzen™ AI 7 PRO processor

AMD Ryzen™ AI 5 PRO processor

AMD Ryzen™ AI 5 PRO processor

AMD Ryzen AI 9 HX PRO processor

2. Multicore is designed to improve performance of certain software products. Not all customers or software applications will necessarily benefit from use of this technology. Performance and clock frequency will vary depending on application workload and your hardware and software configurations. AMD numbering, branding, naming are not a measurement of clock speed.

3. AMD Max Boost frequency performance varies depending on hardware, software and overall system configuration.

4. Features and software that require a NPU may require software purchase, subscription or enablement by a software or platform provider, and third party software may have specific configuration or compatibility requirements. Potential NPU inferencing performance varies by use, configuration, and other factors.

5. In accordance with Microsoft's support policy, HP does not support the Windows 8 or Windows 7 operating system on products configured with Intel and AMD 7th generation and forward processors or provide any Windows 8 or Windows 7 drivers on http://www.support.hp.com.

GRAPHICS

Integrated

AMD Radeon® Graphics

Discrete IC Chip

Supported protocols

Support DirectX® 12, HDCP 2.3, HDMI 2.1 (up to 4K 60Hz)

Display supported (including internal display; dock may be required) up to 4

DISPLAY

Availability may vary by country.

Actual brightness will be lower with touchscreen or HP Sure View.

Non-Touch

16.0 inch diagonal, WUXGA (1920 x 1200), LBL IPS anti-glare, 800 nits, Sure View 6 sRGB 100% eDP1.5 [6]

16.0 inch diagonal, WQUXGA (3840 x 2400), 120 Hz IPS anti-glare, micro-edge, 500 nits, HP DreamColor DCI-P3 100% eDP 1.4+PSR

16.0 inch diagonal, WUXGA (1920 x 1200), 60 Hz IPS anti-glare, 300 nits, sRGB 62.5% eDP 1.2 w/o PSR

16.0 inch diagonal, 2.5K (2560 x 1600), WLED+LBL IPS anti-glare, 400 nits, AD-100

16.0 inch diagonal, WUXGA (1920 x 1200), 60 Hz WLED+LBL IPS anti-glare, 400 nits, sRGB 100% eDP1.5

Touch

16.0 inch diagonal, WUXGA (1920 x 1200), LCD touch IPS anti-glare, 400 nits, sRGB 62.5% eDP 1.2 w/o PSR

Display Size (Diagonal)

40.6 cm (16.0")

Aspect Ratio

16:10

Screen to Body Ratio

90.41%

Max Hinge Open Angle

166°

6. HP Sure View integrated privacy screen is an optional feature that must be configured at purchase and is designed to function in landscape orientation.

DOCKING (SOLD SEPARATELY)

Docking station model name

HP Thunderbolt™ 180W G6 Dock

Total number of supported displays (incl.the notebook) display)

4

Max. resolutions supported

(4) 4K @60Hz*

(2) 4K @ 120Hz*

(3) QHD @ 120Hz*

(1) QHD @ 360Hz*

Dock Connectors

1 x HDMI 2.1, 2 x DisplayPort 1.4, 1 x Thunderbolt 4, 1 x USB-C 3.2 Gen 2 DisplayPort

Technical limitations

*Requires DisplayPort 1.4 support with Display Stream Compression (DSC).

Bluetooth required for HP Quick Connect. HP Quick Connect available on select HP notebooks.

Maximum resolution and display support is dependent on the maximum capability of the notebook.

Thunderbolt Hosts:

Maximum of (4) displays with maximum resolution of 5K@ 30Hz running Thunderbolt host.

Maximum resolution possible is dual 8K displays @ 60Hz running Thunderbolt host or running a non-Thunderbolt host in high resolution mode @30Hz

Non-Thunderbolt hosts:

The highest resolution for dual displays running a non-Thunderbolt host in multi-function mode is

(1) 5K dual cable (using both DP ports) +(1) 4K on USB-C DP port

Non-Thunderbolt hosts support (3) displays with a maximum resolution of (2) 5K single cable + (1) 4K UHD @ 60 Hz in high resolution mode. In multi-function mode the maximum resolution for (3) displays is (2) 5K single cable @ 30Hz + (1) 4K UHD @ 30Hz.

Docking station model name

HP Thunderbolt™ 100W G6 Dock

Total number of supported displays (incl.the notebook) display)

4

Max. resolutions supported

(4) 4K @60Hz*

(2) 4K @ 120Hz*

(3) QHD @ 120Hz*

(1) QHD @ 360Hz*

Dock Connectors

1 x HDMI 2.1, 2 x DisplayPort 1.4, 1 x Thunderbolt 4

Technical limitations

*Requires DisplayPort 1.4 support with Display Stream Compression (DSC).

Bluetooth required for HP Quick Connect. HP Quick Connect available on select HP notebooks.

Maximum resolution and display support is dependent on the maximum capability of the notebook.

Thunderbolt Hosts:

Maximum of (4) displays with maximum resolution of 5K@ 30Hz running Thunderbolt host.

Maximum resolution possible is dual 8K displays @ 60Hz running Thunderbolt host or running a non-Thunderbolt host in high resolution mode @30Hz

Non-Thunderbolt hosts:

The highest resolution for dual displays running a non-Thunderbolt host in multi-function mode is

(1) 5K dual cable (using both DP ports) +(1) 4K on USB-C DP port

Non-Thunderbolt hosts support (3) displays with a maximum resolution of (2) 5K single cable + (1) 4K UHD @ 60 Hz in high resolution mode. In multi-function mode the maximum resolution for (3) displays is (2) 5K single cable @ 30Hz + (1) 4K UHD @ 30Hz.

Docking station model name

HP Thunderbolt™ 280W G6 Dock

Total number of supported displays (incl.the notebook) display)

4

Max. resolutions supported

(4) 4K @60Hz*

(2) 4K @ 120Hz*

(3) QHD @ 120Hz*

(1) QHD @ 360Hz*

Dock Connectors

1 x HDMI 2.1, 2 x DisplayPort 1.4, 1 x Thunderbolt 4, 1 x USB-C 3.2 Gen 2 DisplayPort

Technical limitations

*Requires DisplayPort 1.4 support with Display Stream Compression (DSC).

Bluetooth required for HP Quick Connect. HP Quick Connect available on select HP notebooks.

Maximum resolution and display support is dependent on the maximum capability of the notebook.

Thunderbolt Hosts:

Maximum of (4) displays with maximum resolution of 5K@ 30Hz running Thunderbolt host.

Maximum resolution possible is dual 8K displays @ 60Hz running Thunderbolt host or running a non-Thunderbolt host in high resolution mode @30Hz

Non-Thunderbolt hosts:

The highest resolution for dual displays running a non-Thunderbolt host in multi-function mode is

(1) 5K dual cable (using both DP ports) +(1) 4K on USB-C DP port

Non-Thunderbolt hosts support (3) displays with a maximum resolution of (2) 5K single cable + (1) 4K UHD @ 60 Hz in high resolution mode. In multi-function mode the maximum resolution for (3) displays is (2) 5K single cable @ 30Hz + (1) 4K UHD @ 30Hz.

Docking station model name

HP USB-C™ 100W G6 Dock

Total number of supported displays (incl.the notebook) display)

3

Max. resolutions supported

(1) 4K @120hz*

(2) 4K @120hz*

(3) 4K @60hz*

Dock Connectors

1 x HDMI 2.1, 2 x DisplayPort 1.4

Technical limitations

*Requires DisplayPort 1.4 support with Display Stream Compression (DSC).

Bluetooth required for HP Quick Connect. HP Quick Connect available on select HP notebooks.

Maximum resolution and display support is dependent on the maximum capability of the notebook.

Highest resolution with dual displays is two 8K@ 30Hz host in High Resolution mode.

Three maximum displays supported are two 5K@ 30 Hz on DP ports plus one 4K UHD@ 30 Hz on HDMI in Multi-function mode.

The highest resolution for a non-Thunderbolt host in Multi-function mode is a single 5K dual cable (using both DP ports) + (1) 4K on HDMI port.

STORAGE AND DRIVES

Maximum Storage

2 TB

Storage

1 TB PCIe Gen5 NVMe™ SSD Value [7]

1 TB PCIe® Gen5x4 NVMe™ Self Encrypted OPAL2 SSD [7]

1 TB PCIe® NVMe™ SSD Value [7]

2 TB PCIe Gen5 NVMe™ SSD Value [7]

256 GB PCIe® NVMe™ Self Encrypted OPAL2 SSD Value [7]

256 GB PCIe® NVMe™ SSD Value [7]

512 GB PCIe Gen5 NVMe™ Self Encrypted OPAL2 SSD Value [7]

512 GB PCIe Gen5 NVMe™ SSD Value [7]

512 GB PCIe® NVMe™ SSD Value [7]

RAID

RAID: Unsupported

7. For storage drives, GB = 1 billion bytes. TB = 1 trillion bytes. Actual formatted capacity is less. Up to 32 GB is reserved for system recovery software.

MEMORY

Maximum Memory

64GB DDR5-5600 MT/s (2 x 32 GB) [8]

Memory

64GB DDR5-5600 MT/s (2 x 32 GB)
48GB DDR5-5600 MT/s (2 x 24GB)
32GB DDR5-5600 MT/s (2 x 16 GB)
32GB DDR5-5600 MT/s (1 x 32 GB)
24GB DDR5-5600 MT/s (1 x 24GB)
16GB DDR5-5600 MT/s (2 x 8 GB)
16GB DDR5-5600 MT/s (1 x 16 GB)

Memory Slots

2 SODIMM
System runs at 5600 MT/s
Supports Dual Channel Memory.
Memory is replaceable by customer or customer IT support.

8. Due to the non-industry standard nature of some third-party memory modules, we recommend HP branded memory to ensure compatibility. If you mix memory speeds, the system will perform at the lower memory speed.

NETWORKING /COMMUNICATIONS

Items below may be optional.

Ethernet

Realtek RTL8111EPP 1GbE Ethernet Controller

WLAN

Mediatek MT7925 Wi-Fi 7 Bluetooth® 6.0 AIM-T WW WLAN [10]

Mediatek RZ616 Wi-Fi 6E Bluetooth® 5.3 AIM-T WLAN [11,12]

WWAN

HP 5G NR Sub-6 CAT19 [13]

HP 5G NR Sub-6 CAT19 HP Go Solution [13]

LPWAN

HP RW220-GL LTE (Low Power) (CAT-1bis) [09]

NFC

NFC Mirage WNC XRAV-1

Miracast

Native Miracast Support [14]

9. LPWAN (also called Mobile Narrowband) supports HP Protect & Trace with Wolf Connect service through the subscription term, but does not support mobile broadband use.
10. Wireless access point and Internet service required and sold separately. Availability of public wireless access points limited. Wi-Fi 7 (802.11BE) functionality requires compatible Windows OS, select processor, and a Wi-Fi 7 router, sold separately. Wi-Fi 7 is backwards compatible with prior 802.11 specs. Available in countries where Wi-Fi 7 is supported. The specification for 802.11BE is a draft specification and is not final. If the final specification differs from the draft specification, it may affect the ability of the device to communicate with other 802.11BE devices.
11. Wi-Fi 6E requires a Wi-Fi 6E router, sold separately, to function in the 6GHz band. Availability of public wireless access points limited. Wi-Fi 6E is backwards compatible with prior 802.11 specs. Available in countries where Wi-Fi 6E is supported.

12. Wi-Fi 6E is designed to support gigabit data rate when transferring files between two devices connected to the same router. Requires a wireless router, sold separately, that supports 80MHz and higher channels.
13. 5G module is optional and must be configured at the factory. Module designed for 5G NR NSA (non-standalone) networks as carriers deploy Evolved-Universal Terrestrial Radio Access New Radio Dual Connectivity (ENDC) with both 100Mhz of 5G NR and LTE channel bandwidth, using 256QAM 4x4 as defined by 3GPP. Module requires activation and separately purchased service contract. Check with service provider for coverage and availability in your area. Data connection, upload and download speeds will vary due to network, location, environment, network conditions, and other factors. Backwards compatible to 4G LTE and 3G HSPA technologies. 5G module planned to be available in select platforms and select countries, where carrier supported.
14. Miracast is a wireless technology your PC can use to project your screen to TVs, projectors, and streaming.

AUDIO/MULTIMEDIA

Privacy panel is only available on select models.

Audio

Audio by Poly Studio

2 Integrated stereo speakers

Discrete Amplifiers

2 Integrated dual array microphone

Speaker Power

1W / 8 ohm per speaker

Camera

5MP HDR camera

5MP HDR camera with Image Signal Processing (ISP) and AI Presence Detection, IR camera

Sensors

Ambient Light Sensor

Color Sensor with Ambient Light Sensing

Fingerprint Sensor

Hall Effect Sensor

HP Sure Platform

HP Tamper Lock

Thermal Sensor

KEYBOARDS/POINTING DEVICES/BUTTONS & FUNCTION KEYS

Keyboard

HP Premium Keyboard, spill-resistant, backlit, DuraKeys keyboard.

HP Premium Keyboard, spill-resistant, Privacy, Backlit, DuraKeys keyboard.

Pointing Device

Clickpad

Microsoft Precision Touchpad Default Gestures Support

Multi-touch gesture support

Function Keys[15]

ESC - System information

F1 - Display Switching

F2 - Blank or Privacy

F3 - Brightness Down

F4 - Brightness Up

F5 - Blank or Keyboard Backlight

F6 - Audio Mute

F7 - Volume Down

F8 - Volume Up

F9 - Mic Mute

F10 - Play and Pause

F11 - myHP

F12 - Print Screen

Power Button (with LED)

Insert

Delete

Home

End

Page up

Page down

Microsoft Copilot

Hidden Function Keys

Fn+R - Break, Fn+S - Sys Rq, Fn+C - Scroll Lock

15. Copilot+ in Windows requires Windows 11. Some features require an NPU. Timing of feature delivery and availability varies by market and device. Requires Microsoft account to log in. Where Microsoft in Windows is not available, the Copilot key will lead to the Bing search engine. See aka.ms/copilotpluspcs.

SOFTWARE AND SECURITY

Application Software

Buy Microsoft Office (Sold Separately) [16]

Edge Customization

HP Connection Optimizer

HP Hotkey Support

HP Notifications

HP PC Hardware Diagnostics UEFI

HP PC Hardware Diagnostics Windows

HP Privacy Settings

HP Services Scan [17]

HP Support Assistant [18]

HSA Fusion for Commercial

HSA Telemetry for Commercial

HP app [19]

Poly Camera Pro

Poly Studio Desktop [20]

Manageability Features

HP Client Catalog (download) [21]

HP Client Management Script Library (download) [22]

HP Cloud Recovery [23]

HP Connect for Microsoft Endpoint Manager [24]

HP Driver Packs (download) [25]

HP Image Assistant (download) [26]

HP Manageability Integration Kit (download) [27]

HP Patch Assistant (download) [28]

HP Power Manager with Battery Health Manager (download) [29]

Optional Security Features

HP Wolf Pro Security Edition

Enterprise Security Edition

Security Features

Secured-Core PC Enable [30]

Windows Hello Enhanced Sign-In Security (ESS)

HP Wolf Security for Business which includes: [31]

HP Sure Admin [32]

HP Sure Click [33]

HP Sure Recover [34]

HP Sure Run [35]

HP Sure Sense [36]

HP Sure Start [37]

HP Tamper Lock [38]

Security- TPM

Model

Model: Nuvoton NPCT760HAEYX

Firmware Version

Firmware Version: 7.2.4.1

TCG

TCG TPM 2.0

FIPS 140-3 Compliant

FIPS 140-3 Compliant: Yes

Model

Model: STMicro ST33KTPM2X32DKG9

Firmware Version

Firmware Version: 9.257

TCG

TCG TPM 2.0

FIPS 140-3 Compliant

FIPS 140-3 Compliant: Yes

BIOS

Absolute Persistence Module [39]

Audio Permenant Disable

HP BIOS Update via Network

HP BIOSphere [40]

HP DriveLock & Automatic DriveLock

HP Fingerprint Sensor

HP Secure Erase [41]

HP Wake on WLAN

HP Tamper Lock

HP Wake on WLAN

Smartcard Reader

Model number

Alcorlink IC, CR, AK9563E66-GAF-GR, QFN28

FIPS 140-2 Compliant

FIPS 201 Compliant:

IPv6 Support

Yes

FirstNet Certified

Yes

Does the BIOS implement the ISO/IEC 19678:2015 (formerly NIST 800-147) guidelines?

Yes

UEFI version

2.9

Class

3

16. Microsoft 365 sold separately and requires Internet access for activation.
17. HP Services Scan automatically collects the telemetry necessary upon initial boot of the product to deliver device-level configuration data and health insights and is available preinstalled on select products, thru HP Factory Configuration Services; or it can be downloaded. For more information about how to enable HP Smart Support or for download, please visit http://www.hp.com/smart-support.
18. HP Support Assistant is available on Windows. For more information, please visit http://www.support.hp.com/help/hp-support-assistant.
19. MyHP requires Windows 10 or higher OS.
20. Poly Studio Desktop requires a Windows OS.
21. HP Client Catalog not preinstalled, however available for download at (https://www.hp.com/us-en/solutions/client-management-solutions.html).
22. HP Client Management Script Library (https://www.hp.com/us-en/solutions/client-management-solutions.html#tab=manageability-tools).
23. HP Cloud Recovery is available for Z by HP, HP Elite and Pro desktops and laptops PCs with Intel® or AMD processors and requires an open, network connection. Note: You must back up important files, data, photos, videos, etc. before use to avoid loss of data. Detail, please refer to: https://support.hp.com/us-en/document/c05115630.
24. HP Connect for Microsoft Endpoint Manager is available from the Azure Market Place for HP Pro, Elite, Z and Point-of-Sale PCs managed with Microsoft Endpoint Manager. Subscription to Microsoft Endpoint Manager required and sold separately. Network connection required.
25. HP Driver Packs not preinstalled, however available for download at http://www.hp.com/go/clientmanagement.
26. HP Image Assistant not preinstalled, however available for download at (https://ftp.ext.hp.com/pub/caps-softpaq/cmit/HPIA.html)
27. HP Manageability Integration Kit can be downloaded from http://www.hp.com/go/clientmanagement.
28. HP Patch Assistant available on select HP PCs with the HP Manageability Kit that are managed through Microsoft System Center Configuration Manager. HP Manageability Integration Kit can be downloaded from http://www8.hp.com/us/en/ads/clientmanagement/overview.html.
29. HP Power Manager with Battery Health can be downloaded by entering your system information here: https://support.hp.com/in-en/document/ish_4449597-3519507-16.

30. Secured-Core PC Enable requires an Intel® vPro®, AMD Ryzen™ Pro processor or Qualcomm® processor with SD850 or higher and requires 8 GB or more system memory. Secured-core PC is enabled from the factory.
31. HP Wolf Security for Business requires Windows 10 or 11 Pro or higher, includes various HP security features and is available on HP Pro, Elite, RPOS and Workstation products. See product details for included security features.
32. HP Sure Admin requires HP G8 or newer platforms, Windows 10 or higher, HP BIOS, HP Manageability Kit or KMS Service from http://www.hp.com/go/clientmanagement and HP Sure Admin Local Access Authenticator
33. HP Sure Click requires Windows 10 Pro or higher or Enterprise. See https://bit.ly/2PrLT6A_SureClick for complete details.
34. HP Sure Recover is available on select HP PCs and requires Windows 10 or 11 and an open network connection. You must back up important files, data, photos, videos, etc. before using HP Sure Recover to avoid loss of data. HP Sure Recover Gen6 with Embedded Reimaging is an optional feature on select HP PCs which requires Windows 10 or 11 must be configured at purchase. You must back up important files, data, photos, videos, etc. before use to avoid loss of data.
35. HP Sure Run is available on select HP PCs and requires Windows 10 and higher.
36. HP Sure Sense is available on select HP PCs with Windows 10 Pro, Windows 10 Enterprise, Windows 11 Pro, or Windows 11 Enterprise OS.
37. HP Sure Start is available on select HP PCs and requires Windows 10 and higher
38. HP Tamper Lock can be Enabled/disabled by customers or IT administrator with administrator authority.
39. Absolute Persistence firmware module is shipped turned off and can only be activated with the purchase a license subscription and full activation of the software agent. License subscriptions can be purchased for terms ranging multiple years. Service is limited, check with Absolute for availability outside the U.S. Certain conditions apply. For full details visit: https://www.absolute.com/about/legal/agreements/absolute/.
40. HP BIOSphere features may vary depending on the platform and configuration.
41. HP Secure Erase implements the methods outlined in the National Institute of Standards and Technology Special.

POWER

Power supply availability may vary by country.

Battery is internal and replaceable by customer. Serviceable by warranty.

100W adapter is recommended for best performance and fastest charging.

Power Supply

HP 140W Slim USB-C AC power adapter

100W Wall Mount GaN USB-C AC power adapter

65W Wall Mount GaN USB-C AC power adapter

65W Standard USB Type-C® GaN AC power adapter

Battery

HP Long Life 3 cell, 68Wh Polymer

HP Long Life 8 cell, 77Wh Polymer

Battery Recharge Time

Supports battery HP Fast Charge: approximately 50% in 30 minutes [42]

Power Cord

3-wired plug- 1.0m

Battery life

Up to 12 hours and 30.0 minutes with 68Wh battery (AMD R7 Pro, UMA graphic, brightness set to 250nits on a WUXGA 400 nits, LCD display, (2 x 8 GB) DDR5 memory, 256GB SSD) [43]

Battery Weight

TBD

42. Recharges your battery up to 50% within 30 minutes when the system is off or in standby mode. Power adapter minimum of 65 watts required for battery capacities 56Whr or less. Power adapter minimum of 100 watts required for battery capacities greater than 56Whr and less than 83Whr. Power adapter minimum of 120 watts required for battery capacities greater than 83Whr and less than 100Whr. After charging has reached 50% capacity, charging will return to normal. Charging time may vary +/-10% due to System tolerance.

43. Mobile Mark 30 battery life will vary depending on various factors including product model, configuration, loaded applications, features, use, wireless functionality, and power management settings. The maximum capacity of the battery will naturally decrease with time and usage. See http://www.bapco.com for additional details.

WEIGHT & DIMENSIONS

Weight will vary by configuration. Does not include power adapter.

Front height measurement is near the front edge where the mechanical chassis taper begins. Back height measurement is near the rear edge where the mechanical chassis taper ends.

Product Weight

Starting at 1.760 kg (3.88 lb) with 68.00 Wh battery

Weight will vary by configuration. Does not include power adapter.

Product Dimensions (w x d x h) [44]

Width: 359.00 mm (14.134 in)

Depth: 250.00 mm (9.843 in)

Height: 18.95mm (0.74 in)

Pallet Dimensions (w x d x h)

Product packaging size varies based on options chosen. Please contact your HP representative for your packaging size details. For detailed packaging information, access the HP Commercial Notebooks Packaging Guide.

44. Typical dimension. Actual dimension may vary +/- 0.5mm. Height may vary based on configuration. Maximum Height does not include Rubber feet.

PORTS/SLOTS

Left side

2 x Thunderbolt™ 4 with (USB Power Delivery, DisplayPort™ 2.1) [45]

1 x HDMI 2.1

(Support up to 4k60Hz)

1 x 3.5mm headphone/mic combo jack

1 x Smart Card Reader (optional)

Right side

1 x USB Type-C® 10Gbps signaling rate (USB Power Delivery, DisplayPort™ 1.4)

1 x USB Type-A 5Gbps signaling rate (Data only)

1 x RJ45 Ethernet port

1 x Nano SIM card slot (optional)

1 x Nano Security Lock slot

45. USB 20Gbps signaling rate is not available with Thunderbolt™ 4. Actual throughput may vary.

ENVIRONMENTAL DATA

<table>
<tr><td rowspan="3">Environmental Data</td><td>Eco-Label Certifications & Declarations</td><td>This product has received or is in the process of being certified to the following approvals and may be labeled with one or more of these marks:
IT ECO declaration
US ENERGY STAR®
US Federal Energy Management Program (FEMP)
EPEAT® Gold registered in the United States. See http://www.epeat.net for registration status in your country.
TCO Certified
China Energy Conservation Program (CECP)
China State Environmental Protection Administration (SEPA)
Taiwan Green Mark
Korea Eco-label
Japan PC Green label*</td></tr>
<tr><td>Sustainable Impact Specifications</td><td>Product Carbon Footprint
At least 30% ocean bound plastic in the Speaker enclosure[1]
At least 30% post-consumer recycled plastic[2]
At least 65% recycled metal[3]
External Power Supply 90% Efficiency
Low Halogen[4]
100% of HP paper-based packaging is from recycled or certified sustainable sources[5]
Bulk packaging available</td></tr>
<tr><td>System Configuration

Energy Consumption (in accordance with US ENERGY STAR® test method)</td><td>The configuration used for the Energy Consumption and Declared Noise Emissions data for the Notebook model is based on a “Typically Configured Notebook”.<table><tr><th>115VAC, 60Hz</th><th>230VAC, 50Hz</th><th>100VAC, 50Hz</th></tr><tr><td>5.52 W</td><td>5.42 W</td><td>5.03 W</td></tr><tr><td>0.79 W</td><td>0.83 W</td><td>0.80 W</td></tr><tr><td>0.79 W</td><td>0.83 W</td><td>0.80 W</td></tr><tr><td>0.39 W</td><td>0.38 W</td><td>0.33 W</td></tr></table></td></tr>
</table>

		Note: Energy efficiency data listed is for an ENERGY STAR® compliant product if offered within the model family. HP computers marked with the ENERGY STAR® Logo are compliant with the applicable U.S. Environmental Protection Agency (EPA) ENERGY STAR® specifications for computers. If a model family does not offer ENERGY STAR® compliant configurations, then energy efficiency data listed is for a typically configured PC featuring a hard disk drive, a high efficiency power supply, and a Microsoft Windows® operating system.		
	Heat Dissipation*	**115VAC, 60Hz**	**230VAC, 50Hz**	**100VAC, 50Hz**
	Normal Operation (Short idle)	19 BTU/hr	19 BTU/hr	17 BTU/hr
	Normal Operation (Long idle)	3 BTU/hr	3 BTU/hr	3 BTU/hr
	Sleep	3 BTU/hr	3 BTU/hr	3 BTU/hr
	Off	1 BTU/hr	1 BTU/hr	1 BTU/hr
		*NOTE: Heat dissipation is calculated based on the measured watts, assuming the service level is attained for one hour.		
	Declared Noise Emissions (in accordance with ISO 7779 and ISO 9296)	**Sound Power (L_{WAd}, bels)**	**Sound Pressure (L_{pAm}, decibels)**	
	Typically Configured – Idle	2.6	14.4	
	Fixed Disk – Random writes	4.2	32.0	
	Active mode – Sequential reads	4.2	31.9	
	Longevity and Upgrading	This product can be upgraded, possibly extending its useful life by several years. Upgradeable features and/or components contained in the Spare parts are available throughout the warranty period and or for up to "5" years after the end of production.		

	Additional Information	• This product is in compliance with the Restrictions of Hazardous Substances (RoHS) directive - 2011/65/EC. • This HP product is designed to comply with the Waste Electrical and Electronic Equipment (WEEE) Directive – 2002/96/EC. • This product is in compliance with California Proposition 65 (State of California; Safe Drinking Water and Toxic Enforcement Act of 1986). • This product is in compliance with the IEEE 1680 (EPEAT) standard at the Gold level, see http://www.epeat.net • Plastics parts weighing over 25 grams used in the product are marked per ISO11469 and ISO1043. • This product is 95.9% recycle-able when properly disposed of at end of life.		
	Packaging Materials	**External:**	PAPER/Corrugated	280 g
			PAPER/Molded Pulp	200 g
			PAPER/Paper	32 g
		The plastic packaging material contains at least 0% recycled content.		
		The corrugated paper packaging materials contains at least 60.48% recycled content.		
	RoHS Compliance	HP Inc. complies fully with materials regulations. We were among the first companies to extend the restrictions in the European Union (EU) Restriction of Hazardous Substances (RoHS) Directive to our products worldwide through the HP GSE. HP has contributed to the development of related legislation in Europe, as well as China, India, and Vietnam. We believe the RoHS directive and similar laws play an important role in promoting industry-wide elimination of substances of concern. We have supported the inclusion of additional substances—including PVC, BFRs, and certain phthalates—in future RoHS legislation that pertains to electrical and electronics products. We met our voluntary objective to achieve worldwide compliance with the new EU RoHS requirements for virtually all relevant products by July 2013, and we will continue to extend the scope of the commitment to include further restricted substances as regulations continue to evolve. To obtain a copy of the HP RoHS Compliance Statement, see HP RoHS position statement.		

	Material Usage	This product does not contain any of the following substances in excess of regulatory limits (refer to the HP General Specification for the Environment at https://h20195.www2.hp.com/v2/GetDocument.aspx?docname=c05998906): • Asbestos • Certain Azo Colorants • Certain Brominated Flame Retardants – may not be used as flame retardants in plastics • Cadmium • Chlorinated Hydrocarbons • Chlorinated Paraffins • Bis(2-Ethylhexyl) phthalate (DEHP) • Benzyl butyl phthalate (BBP) • Dibutyl phthalate (DBP) • Diisobutyl phthalate (DIBP) • Formaldehyde • Halogenated Diphenyl Methanes • Lead carbonates and sulfates • Lead and Lead compounds • Mercuric Oxide Batteries • Nickel – finishes must not be used on the external surface designed to be frequently handled or carried by the user. • Ozone Depleting Substances • Polybrominated Biphenyls (PBBs) • Polybrominated Biphenyl Ethers (PBBEs) • Polybrominated Biphenyl Oxides (PBBOs) • Polychlorinated Biphenyl (PCB) • Polychlorinated Terphenyls (PCT) • Polyvinyl Chloride (PVC) – except for wires and cables, and certain retail packaging has been voluntarily removed from most applications. • Radioactive Substances • Tributyl Tin (TBT), Triphenyl Tin (TPT), Tributyl Tin Oxide (TBTO)

	Packaging Usage	HP follows these guidelines to decrease the environmental impact of product packaging: • Eliminate the use of heavy metals such as lead, chromium, mercury and cadmium in packaging materials. • Eliminate the use of ozone-depleting substances (ODS) in packaging materials. • Design packaging materials for ease of disassembly. • Maximize the use of post-consumer recycled content materials in packaging materials. • Use readily recyclable packaging materials such as paper and corrugated materials. • Reduce size and weight of packages to improve transportation fuel efficiency. • Plastic packaging materials are marked according to ISO 11469 and DIN 6120 standards.
	End-of-life Management and Recycling	HP offers end-of-life HP product return and recycling programs in many geographic areas. To recycle your product, please go to: https://h20195.www2.hp.com/V2/GetDocument.aspx?docname=c05403198 or contact your nearest HP sales office. Products returned to HP will be recycled, recovered or disposed of in a responsible manner. The EU WEEE directive (2002/95/EC) requires manufacturers to provide treatment information for each product type for use by treatment facilities. This information (product disassembly instructions) is posted on the Hewlett Packard web site at: HP Product Disassembly Instruction Website. These instructions may be used by recyclers and other WEEE treatment facilities as well as HP OEM customers who integrate and re-sell HP equipment.

	HP, Inc. Corporate Environmental Information	For more information about HP's commitment to the environment:
		• Sustainable Impact Report
		  ○ https://h20195.www2.hp.com/v2/GetDocument.aspx?docname=c06040843
		• Eco-label certifications
		  ○ https://www.hp.com/us-en/sustainable-impact/document-reports.html#filters_documents_reports-=document_type-type_energy_star,type_epeat,type_tcoISO
		• ISO 14001 certificates
		  ○ https://h20195.www2.hp.com/v2/GetDocument.aspx?docname=c04777932

	Footnotes	1. Percentage of ocean-bound plastic contained in each component varies by product. Ocean Bound plastic is expressed as a percentage of the total weight plastic. Ocean Bound plastic is based on the definition set by the UL2809 standard. 2. Recycled plastic is expressed as a percentage of the total weight plastic. Post-consumer recycled is based on the definition set in the EPEAT standard for computers, IEEE 1680.1-2018 standard. 3. Recycled metal is expressed as a percentage of the total weight of the metal according to ISO 14021 definitions for metal parts over 25 grams. 4. External power supplies, WWAN modules, power cords, cables and peripherals excluded. Service parts obtained after purchase may not be Low Halogen. 5. HP paper and fiber-based packaging for PCs, displays, home and office print, and supplies is reported by suppliers as recycled or certified, with a minimum of 97% by volume verified by HP. Packaging is the box that comes with the product and all paper-based materials inside the box. Packaging for personal systems accessories and spare parts is not included. Plastic cushions are made from >90% recycled plastic.

SERVICE AND SUPPORT

1-year warranty and 90 day software limited warranty options depending on country. Batteries have a default one year limited warranty. On-site service and extended coverage is also available. HP Care Pack Services are optional extended service contracts that go beyond the standard limited warranties. To choose the right level of service for your HP product, use the HP Care Pack Services Lookup Tool at: http://www.hp.com/go/cpc [46]

46. HP Care Packs are sold separately. Service levels and response times for HP Care Packs may vary depending on your geographic location. Service starts on date of hardware purchase. Restrictions and limitations apply. For details, visit http://www.hp.com/go/cpc. HP services are governed by the applicable HP terms and conditions of service provided or indicated to Customer at the time of purchase. Customer may have additional statutory rights according to applicable local laws, and such rights are not in any way affected by the HP terms and conditions of service or the HP Limited Warranty provided with your HP Product.

SYSTEM UNIT

Stand - Alone Power Requirements (AC Power)	
Nominal Operating Voltage	20.0 V
Average Operating Power	
Max Operating Power	UMA < 100 W Discrete < 140 W
Temperature	
Operating	Operating: 0° to 35° C (32° to 95° F) System performance may be reduced above 32°C (89.6°F)
Non - operating	Non-operating: -20° to 60° C (-4° to 140° F) System performance may be reduced above 32°C (89.6°F)
Relative Humidity	
Operating	Operating: 10% to 90% (non-condensing)
Non - operating	Non-operating: 5% to 95%, 38.7° C (101.6° F) maximum wet bulb temperature
Shock	
Operating	Operating: 40 G, 2 ms, half-sine
Non - operating	Non-operating: 240 G, 2 ms, half-sine
Random Vibration	
Operating	Operating: 1.043 grms
Non - operating	Non-operating: 3.500 grms
Altitude (unpressurized)	
Operating	Operating: 3,048 m (10,000 ft)
Non - operating	Non-Operating: 12,192 m (40,000 ft)
Industry Standard Certifications	
Regulatory Model Number	HSN-I63C-4
CSA/UL 62368-1	Yes
ENERGY STAR®	Yes [1]
FCC/ICES/CISPR/VCCI	Yes
CE MARKING	Yes
GS Mark	Yes. Related commodity should comply with ISO 9241 Standards.
China CCC/SRRC/CEL	Yes

Taiwan BSMI/NCC	Yes
Korea KCC/KC/KES	Yes
Ukraine NSoC/TEC	Yes
EAEU Compliance	Yes
Saudi Arabian Compliance	Yes
TCO	Yes
EPEAT Gold	Yes [2]
Low Blue Light	Yes
WW RoHS	Yes
CECP	No
Medical EMC: IEC 60601-1-2:2014 EN60601-1-2: 2015	Yes
SEPA	No
MIL - STD Testing	MIL-STD 810H [3]

1. Configurations that are ENERGY STAR® qualified are identified as ENERGY STAR on HP websites and on http://www.energystar.gov
2. Based on US EPEAT® registration according to IEEE 1680.1-2018 EPEAT®. EPEAT® status varies by country. Visit http://www.epeat.net for more information.
3. MIL STD testing is not intended to demonstrate fitness for U.S. Department of Defense contract requirements or for military use. Test results are not a guarantee of future performance under these test conditions. Accidental damage requires an optional HP Accidental Damage Protection Care Pack.

DISPLAYS

Actual brightness will be lower with touchscreen or HP Sure View.

Availability may vary by country

16.0 inch diagonal, WUXGA (1920 x 1200), LBL IPS anti-glare, 800 nits, Sure View 6 sRGB 100% eDP1.5	**Active Area**	344.680 x 215.420 mm (typ)
	Dimensions (W x H)	349.980 x 224.820 mm (max)
	Weight	310 g (max)
	Diagonal Size	16.0 inch
	Surface Treatment	Anti-Glare
	Touch Enabled	No
	Contrast Ratio	1500:1 (typ)
	Refresh Rate	60 Hz
	Brightness	800 nits (typ)
	Pixel Resolution	RGB
	Pixel Resolution - Format	1920x1200 (WUXGA)
	Aspect Ratio	16.10
	Backlight	WLED
	Color Gamut Coverage	sRGB 100%
	Color Depth	8
	Viewing Angle	UWVA 89/89/89/89
	Low Blue Light	Yes
	Power Consumption	EBL@150nits:1.80 W (Max)
16.0 inch diagonal, WQUXGA (3840 x 2400), 120 Hz IPS anti-glare, micro-edge, 500 nits, HP DreamColor DCI-P3 100% eDP 1.4+PSR	**Active Area**	344.680 x 215.420 (typ)
	Dimensions (W x H)	349.980 x 225.420 (max)
	Weight	300 g (max)
	Diagonal Size	16.0 inch
	Surface Treatment	Anti-Glare
	Touch Enabled	No
	Contrast Ratio	1200:1 (typ)
	Refresh Rate	120 (typ)
	Brightness	500 nits (typ)
	Pixel Resolution	RGB

	Pixel Resolution - Format	3840x2400 (WQUXGA)
	Aspect Ratio	16.10
	Backlight	WLED
	Color Gamut Coverage	DCI-P3 100%
	Color Depth	8
	Viewing Angle	UWVA 89/89/89/89
	Low Blue Light	No
	Power Consumption	4.98 (max)/ 5.84 (max)
16.0 inch diagonal, WUXGA (1920 x 1200), 60 Hz IPS anti-glare, 300 nits, sRGB 62.5% eDP 1.2 w/o PSR	**Active Area**	344.678 x 215.424 mm (typ)
	Dimensions (W x H)	350.680 x 226.070 mm (max)
	Weight	390 g (max)
	Diagonal Size	16.0 inch
	Surface Treatment	Anti-Glare
	Touch Enabled	No
	Contrast Ratio	1000:1 (typ)
	Refresh Rate	60 Hz
	Brightness	300 nits (typ)
	Pixel Resolution	RGB
	Pixel Resolution - Format	1920x1200 (WUXGA)
	Aspect Ratio	16.10
	Backlight	WLED
	Color Gamut Coverage	sRGB 62.5%
	Color Depth	8
	Viewing Angle	UWVA 89/89/89/89
	Low Blue Light	No
	Power Consumption	2.7 (max) / 3.4 (max)
16.0 inch diagonal, 2.5K (2560 x 1600), WLED+LBL IPS anti-glare, 400 nits, AD-100	**Active Area**	344.678 x 215.424 mm (typ)
	Dimensions (W x H)	349.980 x 224.820 mm (max)
	Weight	280 g (max)
	Diagonal Size	16.0 inch
	Surface Treatment	Anti-Glare

	Touch Enabled	No
	Contrast Ratio	2000:1 (typ)
	Refresh Rate	120 Hz
	Brightness	400 nits (typ)
	Pixel Resolution	RGB
	Pixel Resolution - Format	2560x1600 (2.5K)
	Aspect Ratio	16.10
	Backlight	WLED
	Color Gamut Coverage	Adobe RGB 100% + DCI-P3 100%
	Color Depth	8
	Viewing Angle	UWVA 89/89/89/89
	Low Blue Light	Yes
	Power Consumption	2.5 (max)/ 3.0 (max)
16.0 inch diagonal, WUXGA (1920 x 1200), LCD touch IPS anti-glare, 400 nits, sRGB 62.5% eDP 1.2 w/o PSR	**Active Area**	344.680 x 215.420 mm (typ)
	Dimensions (W x H)	350.680 x 226.070 mm (max)
	Weight	400 g (max)
	Diagonal Size	16.0 inch
	Surface Treatment	Anti-Glare
	Touch Enabled	Yes
	Contrast Ratio	1000:1 (typ)
	Refresh Rate	40~60Hz
	Brightness	400 nits (typ)
	Pixel Resolution	RGB
	Pixel Resolution - Format	1920x1200 (WUXGA)
	Aspect Ratio	16:10
	Backlight	WLED
	Color Gamut Coverage	sRGB 62.5%
	Color Depth	8
	Viewing Angle	UWVA 89/89/89/89
	Low Blue Light	No
	Power Consumption	5.664W Max

16.0 inch diagonal, WUXGA (1920 x 1200), 60 Hz WLED+LBL IPS anti-glare, 400 nits, sRGB 100% eDP1.5	**Active Area**	344.678 x 215.424 mm (typ)
	Dimensions (W x H)	349.980 x 224.820 mm (max)
	Weight	380 g (max)
	Diagonal Size	16.0 inch
	Surface Treatment	Anti-Glare
	Touch Enabled	No
	Contrast Ratio	1500:1 (typ)
	Refresh Rate	60 Hz
	Brightness	400 nits (typ)
	Pixel Resolution	RGB
	Pixel Resolution - Format	1920x1200 (WUXGA)
	Aspect Ratio	16.10
	Backlight	WLED
	Color Gamut Coverage	sRGB 100%
	Color Depth	8
	Viewing Angle	UWVA 89/89/89/89
	Low Blue Light	Yes
	Power Consumption	EBL@200nits:2.40 W (Max)

STORAGE

1 TB PCIe Gen5 NVMe™ Value 2280 Solid State Drive [1]	**Form Factor**	M.2 2280
	Capacity	1 TB
	NAND Type	Value
	Weight	10 g
	Interface	PCIe Gen5 NVMe
	Sequential Read	9500 MB/s ±20%
	Sequential Write	7000 MB/s ±20%
	Logical Blocks	2000409264
	Features	Pyrite 2.0; TRIM; L1.2
		Not all features are available in all versions
1 TB PCIe® NVMe™ 2280 Self Encrypted OPAL2 Solid State Drive [1]	**Form Factor**	M.2 2280
	Capacity	1 TB
	NAND Type	Performance
	Weight	10 g
	Interface	PCIe Gen5x4 NVMe
	Sequential Read	13000 MB/s ±20%
	Sequential Write	9000 MB/s ±20%
	Logical Blocks	2000409264
	Features	TCG Opal 2.0; TRIM; L1.2
		Not all features are available in all versions
1 TB PCIe® NVMe™ Value 2280 Solid State Drive [1]	**Form Factor**	M.2 2280
	Capacity	1TB
	NAND Type	Value
	Weight	10 g
	Interface	PCIe NVMe
	Sequential Read	3500 MB/s ±20%
	Sequential Write	2700 MB/s ±20%
	Logical Blocks	2000409264
	Features	Pyrite 2.0; TRIM; L1.2
		Not all features are available in all versions

2 TB PCIe Gen5 NVMe™ Value 2280 Solid State Drive [1]	**Form Factor**	M.2 2280
	Capacity	2 TB
	NAND Type	Value
	Weight	10g
	Interface	PCIe Gen5 NVMe
	Sequential Read	10000 MB/s ±20%
	Sequential Write	8000 MB/s ±20%
	Logical Blocks	4000797360
	Features	Pyrite 2.0; TRIM; L1.2 Not all features are available in all versions
256 GB PCIe® NVMe™ Value 2280 Self Encrypted OPAL2 Solid State Drive [1]	**Form Factor**	M.2 2280
	Capacity	256 GB
	NAND Type	Value
	Weight	10g
	Interface	PCIe NVMe
	Sequential Read	3100 MB/s ±20%
	Sequential Write	1200 MB/s ±20%
	Logical Blocks	500118192
	Features	TCG Opal 2.0; TRIM; L1.2 Not all features are available in all versions
256 GB PCIe® NVMe™ Value 2280 Solid State Drive [1]	**Form Factor**	M.2 2280
	Capacity	256GB
	NAND Type	Value
	Weight	10 g
	Interface	PCIe NVMe
	Sequential Read	3100 MB/s ±20%
	Sequential Write	1200 MB/s ±20%
	Logical Blocks	500118192
	Features	Pyrite 2.0; TRIM; L1.2 Not all features are available in all versions

512 GB PCIe Gen5 NVMe™ Value 2280 Self Encrypted OPAL2 Solid State Drive [1]	**Form Factor**	M.2 2280
	Capacity	512 GB
	NAND Type	Value
	Weight	10 g
	Interface	PCIe Gen5 NVMe
	Sequential Read	9000 MB/s ±20%
	Sequential Write	6000 MB/s ±20%
	Logical Blocks	1000215216
	Features	TCG Opal 2.0; TRIM; L1.2
		Not all features are available in all versions
512 GB PCIe Gen5 NVMe™ Value 2280 Solid State Drive [1]	**Form Factor**	M.2 2280
	Capacity	512 GB
	NAND Type	Value
	Weight	10g
	Interface	PCIe Gen5 NVMe
	Sequential Read	9000 MB/s ±20%
	Sequential Write	6000 MB/s ±20%
	Logical Blocks	1000215216
	Features	Pyrite 2.0; TRIM; L1.2
		Not all features are available in all versions
512 GB PCIe® NVMe™ Value 2280 Solid State Drive [1]	**Form Factor**	M.2 2280
	Capacity	512GB
	NAND Type	Value
	Weight	10g
	Interface	PCIe NVMe
	Sequential Read	3500 MB/s ±20%
	Sequential Write	1600 MB/s ±20%
	Logical Blocks	1000215216
	Features	Pyrite 2.0; TRIM; L1.2
		Not all features are available in all versions

1. For storage drives, GB = 1 billion bytes. TB = 1 trillion bytes. Actual formatted capacity is less. Up to 32 GB is reserved for system recovery software.

NETWORKING / COMMUNICATION

Mediatek MT7925 Wi-Fi 7 Bluetooth® 6.0 AIM-T WW WLAN [1,2]	**Wireless LAN Standards**	IEEE 802.11a IEEE 802.11ac IEEE 802.11ax IEEE 802.11b IEEE 802.11be IEEE 802.11d IEEE 802.11e IEEE 802.11g IEEE 802.11h IEEE 802.11i IEEE 802.11j IEEE 802.11k IEEE 802.11mc IEEE 802.11n IEEE 802.11r IEEE 802.11v IEEE 802.11w
	Interoperability	Wi-Fi certified
	Frequency Band	802.11b/g/n/ax/be 2.402 - 2.482 GHz 802.11a/n/ac/ax/be 4.9 - 4.95 GHz (Japan) 5.15 - 5.25 GHz 5.25 - 5.35 GHz 5.47 - 5.725 GHz 5.825 - 5.850 GHz 5.955 - 6.415 GHz 6.435 - 6.515 GHz 6.535 - 6.875 GHz 6.895 - 7.115 GH
	Data Rates	802.11b: 1, 2, 5.5, 11 Mbps 802.11g: 6, 9, 12, 18, 24, 36, 48, 54 Mbps 802.11a: 6, 9, 12, 18, 24, 36, 48, 54 Mbps 802.11n: max 300Mbps 802.11ac : 1733Mbps 802.11ax : max 2.4Gbps 802.11be : max 2.8Gbps (160MHz)
	Modulation	Direct Sequence Spread Spectrum OFDM, BPSK, QPSK, CCK, 16-QAM, 64-QAM, 256-QAM, 1024QAM, 4096QAM

Security	IEEE and WiFi compliant 64 / 128 bit WEP encryption for a/b/g mode only AES-CCMP: 128 bit in hardware 802.1x authentication WPA, WPA2: 802.1x. WPA-PSK, WPA2-PSK, TKIP, and AES. WPA2 certification WPA3 certification IEEE 802.11i WAPI
Network Architecture	Ad-hoc (Peer to Peer)
Models	Infrastructure (Access Point Required)
Roaming	IEEE 802.11 compliant roaming between access points
Output Power	802.11b, 1Mbps : +17dBm minimum 802.11g, 6Mpbs : +16dBm minimum 802.11a, 6Mbps : +17dBm minimum 802.11n, MCS7(HT20) : +14dBm minimum 802.11n, MCS7(HT40) : +13.5dBm minimu 802.11ac MCS9(VHT20) : 13.5dBm minimum 802.11ac MCS9(VHT40) : +13.5dBm minimum 802.11ac MCS9(VHT80) : +12.5dBm minimum 802.11ac MCS9(VHT160) : +10.5dBm minimum 802.11ax MCS11(HE20)(6GHz) : +11.5dBm minimum 802.11ax MCS11(HE40)(6GHz) : +7.5dBm minimum 802.11ax MCS11(HE80)(6GHz) : +7.5dBm minimum 802.11ax MCS11(HE160)(6GHz) : +7.5dBm minimum 802.11be MCS13(EHT20)(6GHz) : +11.5dBm 802.11be MCS13(EHT40)(6GHz) : +7.5dBm 802.11be MCS13(EHT80)(6GHz) : +7.5dBm 802.11be MCS13(EHT160)(6GHz) : +6.5dBm
Power Consumption	Transmit mode 2.7 W Receive mode 1.8 W Idle mode (PSP) 180 mW (WLAN Associated)

	Idle mode 50 mW (WLAN unassociated)
	Connected Standby 10mW
	Radio disabled 8 mW
Power Management	ACPI and PCI Express compliant power management
	802.11 compliant power saving mode
Receiver Sensitivity	802.11b, 1Mbps : -93.5dBm maximum
	802.11b, 11Mbps : -85dBm maximum
	802.11a/g, 6Mbps : -90.5dBm maximum
	802.11a/g, 54Mbps : -72.5dBm maximum
	802.11n, MCS0(HT20) : -90dBm maximum
	802.11n, MCS7(HT20) : -71.5dBm maximum
	802.11n, MCS0(HT40) : -88.5dBm maximum
	802.11n, MCS7(HT40) : -68.5dBm maximum
	802.11ac, MCS9(VHT20) : -88.5dBm maximum
	802.11ac, MCS9(VHT40) : -65.5dBm maximum
	802.11ac, MCS9(VHT80) : -60.5dBm maximum
	802.11ac, MCS9(VHT160) : -58.5dBm maximum
	802.11ax, MCS11(HE20)(6GHz) : -59.5dBm maximum
	802.11ax, MCS11(HE40)(6GHz) : -56.5dBm maximum
	802.11ax, MCS11(HE80)(6GHz) : -53.5dBm maximum
	802.11ax, MCS11(HE160)(6GHz) : -51.5dBm maximum
	802.11be, MCS13(EHT20)(6GHz) : -55.5dBm maximum
	802.11be, MCS13(EHT40)(6GHz) : -53.5dBm maximum
	802.11be, MCS13(EHT80)(6GHz) : -51.5dBm maximum
	802.11be, MCS13(EHT160)(6GHz) : -48.5dBm maximum
Antenna Type	High efficiency antenna with spatial diversity, mounted in the display enclosure
	Two embedded dual band 2.4/5 GHz antennas are provided to the card to support WLAN MIMO communications and Bluetooth communications
Form Factor	PCI-Express M.2 MiniCard
Dimensions	Type 2230 : 2.3 x 22.0 x 30.0 mm

Weight	Type 2230 : 2.8g
Operating Voltage	3.3v +/- 9%
	Integrated Bluetooth® specifications
Bluetooth® Specification	4.0/4.1/4.2/5.0/5.1/5.2/5.3/5.4/6.0 Compliant
Frequency Band	2402 to 2480 MHz
Number of Available	Legacy : 0~79 (1 MHz/CH)
Channels	BLE : 0~39 (2 MHz/CH)
Data Rates and Throughput	Legacy : 3 Mbps data rate; throughput up to 2.17 Mbps Bluetooth® Low Energy : 1 Mbps data rate; throughput up to 0.2 Mbps Legacy : Synchronous Connection Oriented links up to 3, 64 kbps, voice channels Legacy : Asynchronous Connection Less links 2178.1 kbps/177.1 kbps asymmetric (3-DH5) or 864 kbps symmetric (3-EV5)
Transmit Power	The Bluetooth component shall operate as a Class I Bluetooth device with a maximum transmit power of +15.5 dBm for BR and +13dBm for EDR.
Power Consumption	Peak (Tx): 330 mW Peak (Rx): 230 mW Selective Suspend: 17 mW
Bluetooth® Software	1. Microsoft Windows Bluetooth Software
Supported Link Topology	2. Linux/Chrome OS Bluetooth Software.
Power Management	ACPI and PCI Express compliant power management 802.11 compliant power saving mode
Certifications	FCC (47 CFR) Part 15C, Section 15.247 & 15.249 ETS 300 328, ETS 300 826 Low Voltage Directive IEC950 UL, CSA, and CE Mark
Bluetooth® Profiles	BT4.1-ESR 5/6/7 Compliance
Supported	LE Link Layer Ping

		LE Dual Mode LE Link Layer LE Low Duty Cycle Directed Advertising LE L2CAP Connection Oriented Channels Train Nudging & Interlaced Scan BT4.2 ESR08 Compliance LE Secure Connection- Basic/Full LE Privacy 1.2 –Link Layer Privacy LE Privacy 1.2 –Extended Scanner Filter Policies LE Data Packet Length Extension FAX Profile (FAX) Basic Imaging Profile (BIP)2 Headset Profile (HSP) Hands Free Profile (HFP) Advanced Audio Distribution Profile (A2DP) BT5.2 ESR9/10 Compliance LE Advertisement Extensions Channel Selection Algo Limited High Duty Cycle Non-Connectable Advertising 2Mbps LE LE Long Range BT5.3 Host to Controller Encryption Key Control Enahancements Compliance to the latest Errata Sectipn 12.3 of BT 5.3 specification BT5.4 BT6.0
Mediatek RZ616 Wi-Fi 6E Bluetooth® 5.3 AIM-T WLAN [2,3,4]	**Wireless LAN Standards**	IEEE 802.11a IEEE 802.11ac IEEE 802.11ax IEEE 802.11b

	IEEE 802.11d
	IEEE 802.11e
	IEEE 802.11g
	IEEE 802.11h
	IEEE 802.11i
	IEEE 802.11j
	IEEE 802.11k
	IEEE 802.11mc
	IEEE 802.11n
	IEEE 802.11r
	IEEE 802.11v
	IEEE 802.11w
Interoperability	Wi-Fi certified
Frequency Band	802.11b/g/n/ax
	2.402 - 2.482 GHz
	802.11a/n/ac/ax
	5.15 - 5.25 GHz
	5.25 - 5.35 GHz
	5.47 - 5.725 GHz
	5.825 - 5.850 GHz
	5.925 - 7.125 GHz
Data Rates	802.11b: 1, 2, 5.5, 11 Mbps
	802.11g: 6, 9, 12, 18, 24, 36, 48, 54 Mbps
	802.11a: 6, 9, 12, 18, 24, 36, 48, 54 Mbps
	802.11n: MCS 0 ~ MCS 15, (20MHz, and 40MHz)
	802.11ac : MCS0 ~ MCS9, (20MHz, 40MHz, ,80MHz & 160MHz)
	802.11ax : MCS0 ~ MCS11, (20MHz, 40MHz, ,80MHz & 160MHz)
Modulation	Direct Sequence Spread Spectrum
	OFDM, BPSK, QPSK, CCK, 16-QAM, 64-QAM, 256-QAM, 1024QAM
Security	IEEE and WiFi certified 64 / 128 bit WEP encryption for a/b/g mode only

	AES-CCMP: 128 bit in hardware
	802.1x authentication
	WPA, WPA2: 802.1x. WPA-PSK, WPA2-PSK, TKIP, and AES.
	WPA2 certification
	WPA3 (personal) certification
	IEEE 802.11i
	WAPI
Network Architecture	Ad-hoc (Peer to Peer)
Models	Infrastructure (Access Point Required)
Roaming	IEEE 802.11 compliant roaming between access points
Output Power	2.4GHz (MIMO, typical):
	802.11b : +18dBm
	802.11g : +16.5dBm
	802.11n/ac/ax (HT20/VHT20/HE20) : +16dBm
	802.11n/ac/ax (HT40/VHT40/HE40) : +12.5dBm
	5GHz (MIMO, typical):
	802.11a : +13dBm
	802.11n/ac/ax (HT20/VHT20/HE20) : +13.5dBm
	802.11n/ac/ax (HT40/VHT40/HE40) : +12.5dBm
	802.11ac/ax (VHT80/HE80) : +11.5dBm
	802.11ax HE160 : +11.5dBm
	6GHz LPI mode (MIMO, typical)::
	802.11a : 0dBm
	802.11ax HE20 : +1dBm
	802.11ax HE40 : +4dBm
	802.11ax HE80 : +7dBm
	802.11ax HE160 : +7.5dBm
Power Consumption	Transmit mode : 2.5 W
	Receive mode : 2.0 W
	Idle mode (PSP) : 180 mW (WLAN Associated)
	Idle mode: 50 mW (WLAN unassociated)
	Connected Standby/Modern Standby : 10 mW

	Radio disabled : 8 mW
Power Management	ACPI and PCI Express® compliant power management
	802.11 compliant power saving mode
Receiver Sensitivity	2.4GHz (SISO):
	802.11b, 11Mbps : -82dBm maximum
	802.11g, 54Mbps : -71dBm maximum
	802.11n, MCS7 : -64dBm maximum
	802.11ac, MCS9 : -52dBm maximum
	802.11ax, MCS11(HT40): -49dBm maximum
	5GHz (SISO):
	802.11a, 54Mbps : -71dBm maximum
	802.11n, MCS07 : -64dBm maximum
	802.11ac, MCS9 : -52dBm maximum
	802.11ax, MCS11(HE80/HE160): -46dBm maximum
	6GHz (SISO):
	802.11a, 54Mbps : -71dBm maximum
	802.11n, MCS7 : -64dBm maximum
	802.11ac, MCS9 : -52dBm maximum
	802.11ax, MCS11(HE160): -46dBm maximum
Antenna Type	High efficiency antenna with spatial diversity, mounted in the display enclosure
	Two embedded dual band 2.4/5/6 GHz antennas are provided to the card to support WLAN MIMO communications and Bluetooth communications
Form Factor	PCI Express® M.2 MiniCard
Dimensions	30.00 x 22.00 x 2.30 mm (1.18 x 0.87 x 0.09 inch)
Weight	Type 2230 : 2.8g (0.099 oz)
Operating Voltage	3.3 v +/- 9 %
	Integrated Bluetooth® specifications
Bluetooth® Specification	4.0/4.1/4.2/5.0/5.1/5.2/5.3 Compliant
Frequency Band	2402 to 2480 MHz
Number of Available Channels	Legacy : 0~79 (1 MHz/CH)
	BLE : 0~39 (2 MHz/CH)

Data Rates and Throughput	Legacy : 3 Mbps data rate; throughput up to 2.17 Mbps Bluetooth® Low Energy : 1 Mbps data rate; throughput up to 0.2 Mbps Legacy : Synchronous Connection Oriented links up to 3, 64 kbps, voice channels Legacy : Asynchronous Connection Less links 2178.1 kbps/177.1 kbps asymmetric (3-DH5) or 864 kbps symmetric (3-EV5)
Transmit Power	The Bluetooth component shall operate as a Class 1.5 Bluetooth device with a maximum transmit power of + 14 dBm and 10 dBm for BR and EDR, respectively.
Power Consumption	Peak (Tx): 330 mW Peak (Rx): 230 mW Selective Suspend: 17 mW
Bluetooth® Software	Microsoft Windows Bluetooth® Software
Supported Link Topology	
Power Management	Microsoft Windows ACPI, and USB Bus Support
Certifications	FCC (47 CFR) Part 15C/E, Section 15.247, 15.249, 15.407 ETSI 300 328, ETSI 301 893, ETSI 303 687
Bluetooth® Profiles Supported	BT4.1-ESR 5/6/7 Compliance LE Link Layer Ping LE Dual Mode LE Link Layer LE Low Duty Cycle Directed Advertising LE L2CAP Connection Oriented Channels Train Nudging & Interlaced Scan BT4.2 ESR08 Compliance LE Secure Connection- Basic/Full LE Privacy 1.2 –Link Layer Privacy LE Privacy 1.2 –Extended Scanner Filter Policies LE Data Packet Length Extension FAX Profile (FAX) Basic Imaging Profile (BIP)2

		Headset Profile (HSP) Hands Free Profile (HFP) Advanced Audio Distribution Profile (A2DP) BT5.2 ESR9/10 Compliance LE Advertisement Extensions Channel Selection Algo Limited High Duty Cycle Non-Connectable Advertising 2Mbps LE LE Long Range Windows BT profiles support BT5.3 Periodic Advertisement interval Encryption key size control enhancements
HP 5G NR Sub-6 CAT19[5]	**Technology Operating Bands**	WCDMA/HSPA+ operating bands: Band 01: 1920 to 1980 MHz (UL), 2110 to 2170 MHz (DL) Band 02: 1850 to 1910 MHz (UL), 1930 to 1990 MHz (DL) Band 04: 1710 to 1755 MHz (UL), 2110 to 2155 MHz (DL) Band 05: 824 to 849 MHz (UL), 869 to 894 MHz (DL) Band 08: 880 to 915 MHz (UL), 925 to 960 MHz (DL) LTE FDD/TDD operating bands: Band 01: 1920 to 1980 MHz (UL), 2110 to 2170 MHz (DL) Band 02: 1850 to 1910 MHz (UL), 1930 to 1990 MHz (DL) Band 03: 1710 to 1785 MHz (UL), 1805 to 1880 MHz (DL) Band 04: 1710 to 1755 MHz (UL), 2110 to 2155 MHz (DL) Band 05: 824 to 849 MHz (UL), 869 to 894 MHz (DL) Band 07: 2500 to 2570 MHz (UL), 2620 to 2690 MHz (DL) Band 08: 880 to 915 MHz (UL), 925 to 960 MHz (DL) Band 12: 699 to 716 MHz (UL), 729 to 746 MHz (DL) Band 13: 777 to 787 MHz (UL), 746 to 756 MHz (DL) Band 14: 788 to 798 MHz (UL), 758 to 768 MHz (DL)

Band 17: 704 to 716 MHz (UL), 734 to 746 MHz (DL)
Band 18: 815 to 830 MHz (UL), 860 to 875 MHz (DL)
Band 19: 830 to 845 MHz (UL), 875 to 890 MHz (DL)
Band 20: 832 to 862 MHz (UL), 791 to 821 MHz (DL)
Band 25: 1850 to 1915 MHz (UL), 1930 to 1995 MHz (DL)
Band 26: 814 to 849 MHz (UL), 859 to 894 MHz (DL)
Band 28: 703 to 748 MHz (UL), 758 to 803 MHz (DL)
Band 29: 717 to 728 MHz (DL)
Band 30: 2305 to 2315 MHz (UL) 2350 to 2360 MHz (DL)
Band 32: 1452 to 1496 MHz (DL)
Band 34: 2010 to 2025 MHz (UL/DL)
Band 38: 2570 to 2620 MHz (UL/DL)
Band 39: 1880 to 1920 MHz (UL/DL)
Band 40: 2300 to 2400 MHz (UL/DL)
Band 41: 2496 to 2690 MHz (UL/DL)
Band 42: 3400 to 3600 MHz (UL/DL)
Band 43: 3400 to 3800 MHz (UL/DL)
Band 46: 5150 to 5925 MHz (DL)
Band 48: 3550 to 3700 MHz (UL/DL)
Band 66: 1710 to 1800 MHz (UL), 2110 to 2200 MHz (DL)
Band 71: 663 to 698 MHz (UL), 617 to 652 MHz (DL)

5GNR Sub 6GHZ:
n1: 1920 to 1980 MHz (UL), 2110 to 2170 MHz (DL)
n2: 1850 to 1910 MHz (UL), 1930 to 1990 MHz (DL)
n3: 1710 to 1785 MHz (UL), 1805 to 1880 MHz (DL)
n5: 824 to 849 MHz (UL), 869 to 894 MHz (DL)
n7: 2500 to 2570 MHz (UL), 2620 to 2690 MHz (DL)
n8: 880 to 915 MHz (UL), 925 to 960 MHz (DL)
n12: 699 to 716 MHz (UL), 729 to 746 MHz (DL)
n14: 788 to 798 MHz (UL), 758 to 768 MHz (DL)
n20: 832 to 862 MHz (UL), 791 to 821 MHz (DL)
n25: 1850 to 1915 MHz (UL), 1930 to 1995 MHz (DL)

	n26: 814 to 849 MHz (UL), 859 to 894 MHz (DL)
	n28: 703 to 748 MHz (UL), 758 to 803 MHz (DL)
	n30: 2305 to 2315 MHz (UL) 2350 to 2360 MHz (DL)
	n38: 2570 to 2620 MHz (UL/DL)
	n40: 2300 to 2400 MHz (UL/DL)
	n41: 2496 to 2690 MHz (UL/DL)
	n48: 3550 to 3700 MHZ (UL/DL)
	n66: 1710 to 1800 MHz (UL), 2110 to 2200 MHz (DL)
	n71: 663 to 698 MHz (UL), 617 to 652 MHz (DL)
	n77: 3300 to 4200 MHz (UL/DL)
	n78: 3300 to 3800 MHz (UL/DL)
	n79: 4400 to 5000 MHz (UL/DL)
Wireless Protocol Standards	NR Sub6G rel15
	200MHz 2 DLCA, 256 QAM
	200MHz 2 ULCA, 256 QAM
	15KHz/30KHz SCS for FDD/TDD
	LTE Rel15
	100MHz 5 DLCA, 256 QAM
	40MHz 2 ULCA, 256 QAM
	UMTS Rel8
GPS	GPS only support L1 C/A
GPS Bands	GPS: L1 (1575.42MHz)
	GLONASS: L1 (1602MHz)
	BeidouB1(1561.098MHz)
	Galileo E1 (1575.42)
	QZSS (1575.42 MHz)
Maximum Data Rates	Sub-6 SA Peak
	DL 4.67Gbps/UL 1.25Gbps
	Sub-6 NSA Peak
	DL 3.74Gbps/UL 835Mbps
	LTE Peak
	DL 1.6Gbps (CAT19)/UL 211Mbps (CAT18)
	UMTS/HSPA+

		DL DC-HSPA+: 42 Mbps (CAT24)/UL 11.5 Mbps (CAT7)
	Maximum Output Power	NR : 23 dBm in all band except (n30 = 22dBm & n48=21dBm & n77=25dBm & n41/n77/n78 = 26dBm) LTE: 23 dBm in all band except (B30 = 22dBm & B48=21dBm & B41=26dBm) UMTS: 23.5 dBm
	Maximum Power Consumption	5G Sub 6: 3,500 mA (peak); 1,674 mA (average)
	Form Factor	M.2, 3052-S3 Key B
	Weight	8.7 g (0.307 oz)
	Dimensions (Length x Width x Thickness)	52.00 x 30.00 x 2.30 mm (2.05 x 1.18 x 0.09 inch)
	Embedded eSIM	Support
HP 5G NR Sub-6 CAT19 HP Go Solution[5]	**Technology Operating Bands**	WCDMA/HSPA+ operating bands: Band 01: 1920 to 1980 MHz (UL), 2110 to 2170 MHz (DL) Band 02: 1850 to 1910 MHz (UL), 1930 to 1990 MHz (DL) Band 04: 1710 to 1755 MHz (UL), 2110 to 2155 MHz (DL) Band 05: 824 to 849 MHz (UL), 869 to 894 MHz (DL) Band 08: 880 to 915 MHz (UL), 925 to 960 MHz (DL) LTE FDD/TDD operating bands: Band 01: 1920 to 1980 MHz (UL), 2110 to 2170 MHz (DL) Band 02: 1850 to 1910 MHz (UL), 1930 to 1990 MHz (DL) Band 03: 1710 to 1785 MHz (UL), 1805 to 1880 MHz (DL) Band 04: 1710 to 1755 MHz (UL), 2110 to 2155 MHz (DL) Band 05: 824 to 849 MHz (UL), 869 to 894 MHz (DL) Band 07: 2500 to 2570 MHz (UL), 2620 to 2690 MHz (DL) Band 08: 880 to 915 MHz (UL), 925 to 960 MHz (DL) Band 12: 699 to 716 MHz (UL), 729 to 746 MHz (DL)

Band 13: 777 to 787 MHz (UL), 746 to 756 MHz (DL)
Band 14: 788 to 798 MHz (UL), 758 to 768 MHz (DL)
Band 17: 704 to 716 MHz (UL), 734 to 746 MHz (DL)
Band 18: 815 to 830 MHz (UL), 860 to 875 MHz (DL)
Band 19: 830 to 845 MHz (UL), 875 to 890 MHz (DL)
Band 20: 832 to 862 MHz (UL), 791 to 821 MHz (DL)
Band 25: 1850 to 1915 MHz (UL), 1930 to 1995 MHz (DL)
Band 26: 814 to 849 MHz (UL), 859 to 894 MHz (DL)
Band 28: 703 to 748 MHz (UL), 758 to 803 MHz (DL)
Band 29: 717 to 728 MHz (DL)
Band 30: 2305 to 2315 MHz (UL) 2350 to 2360 MHz (DL)
Band 32: 1452 to 1496 MHz (DL)
Band 34: 2010 to 2025 MHz (UL/DL)
Band 38: 2570 to 2620 MHz (UL/DL)
Band 39: 1880 to 1920 MHz (UL/DL)
Band 40: 2300 to 2400 MHz (UL/DL)
Band 41: 2496 to 2690 MHz (UL/DL)
Band 42: 3400 to 3600 MHz (UL/DL)
Band 43: 3400 to 3800 MHz (UL/DL)
Band 46: 5150 to 5925 MHz (DL)
Band 48: 3550 to 3700 MHz (UL/DL)
Band 66: 1710 to 1800 MHz (UL), 2110 to 2200 MHz (DL)
Band 71: 663 to 698 MHz (UL), 617 to 652 MHz (DL)

5GNR Sub 6GHZ:
n1: 1920 to 1980 MHz (UL), 2110 to 2170 MHz (DL)
n2: 1850 to 1910 MHz (UL), 1930 to 1990 MHz (DL)
n3: 1710 to 1785 MHz (UL), 1805 to 1880 MHz (DL)
n5: 824 to 849 MHz (UL), 869 to 894 MHz (DL)
n7: 2500 to 2570 MHz (UL), 2620 to 2690 MHz (DL)
n8: 880 to 915 MHz (UL), 925 to 960 MHz (DL)
n12: 699 to 716 MHz (UL), 729 to 746 MHz (DL)
n14: 788 to 798 MHz (UL), 758 to 768 MHz (DL)

	n20: 832 to 862 MHz (UL), 791 to 821 MHz (DL)
	n25: 1850 to 1915 MHz (UL), 1930 to 1995 MHz (DL)
	n26: 814 to 849 MHz (UL), 859 to 894 MHz (DL)
	n28: 703 to 748 MHz (UL), 758 to 803 MHz (DL)
	n30: 2305 to 2315 MHz (UL) 2350 to 2360 MHz (DL)
	n38: 2570 to 2620 MHz (UL/DL)
	n40: 2300 to 2400 MHz (UL/DL)
	n41: 2496 to 2690 MHz (UL/DL)
	n48: 3550 to 3700 MHZ (UL/DL)
	n66: 1710 to 1800 MHz (UL), 2110 to 2200 MHz (DL)
	n71: 663 to 698 MHz (UL), 617 to 652 MHz (DL)
	n77: 3300 to 4200 MHz (UL/DL)
	n78: 3300 to 3800 MHz (UL/DL)
	n79: 4400 to 5000 MHz (UL/DL)
Wireless Protocol Standards	NR Sub6G rel15
	200MHz 2 DLCA, 256 QAM
	200MHz 2 ULCA, 256 QAM
	15KHz/30KHz SCS for FDD/TDD
	LTE Rel15
	100MHz 5 DLCA, 256 QAM
	40MHz 2 ULCA, 256 QAM
	UMTS Rel8
GPS	GPS only support L1 C/A
GPS Bands	GPS: L1 (1575.42MHz)
	GLONASS: L1 (1602MHz)
	BeidouB1(1561.098MHz)
	Galileo E1 (1575.42)
	QZSS (1575.42 MHz)
Maximum Data Rates	GPS: L1 (1575.42MHz)
	GLONASS: L1 (1602MHz)
	BeidouB1(1561.098MHz)
	Galileo E1 (1575.42)
	QZSS (1575.42 MHz)

	Maximum Output Power	NR : 23 dBm in all band except (n30 = 22dBm & n48=21dBm & n77=25dBm & n41/n77/n78 = 26dBm) LTE: 23 dBm in all band except (B30 = 22dBm & B48=21dBm & B41=26dBm) UMTS: 23.5 dBm
	Maximum Power Consumption	5G Sub 6: 3,500 mA (peak); 1,674 mA (average)
	Form Factor	M.2 3052-S3 Key B
	Weight	8.7 g (0.307 oz)
	Dimensions (Length x Width x Thickness)	52.00 x 30.00 x 2.30 mm (2.05 x 1.18 x 0.09 inch)
	Embedded eSIM	Support
NFC Mirage WNC XRAV-1	**Dimensions (L x W x H)**	17.00 x 10.00 x 2.00 mm (0.67 x 0.39 x 0.08 inch)
	Chipset	NPC300
	System Interface	I2C
	NFC RF Standards	ISO/IEC 14443 A ISO/IEC 14443 B ISO/IEC 15693 ISO/IEC 18092 ECMA-340 NFCIP-1 Target and Initiator ECMA-320 NFCIP-2
	NFC Forum Support	Type 1, Type 2, Type 3 / Type 4, NFCIP-1 / NFCIP-2
	Reader Mode (PCD-VCD)	ISO/IEC 14443 A ISO/IEC 14443 B ISO/IEC 15693

	MIFARE 1K
	MIFARE 4K
	MIFARE DESFire
	FeliCa
	Jewel and Topaz
Card Emulation Mode (PICC-VICC)	ISO/IEC 14443 A
	ISO/IEC 14443 B and B'
	MIFARE
	FeliCa
Frequency	13.56 MHz
NFC Modes Supported	Reader/Writer,
	Peer-to-Peer
Raw RF Data Rates	106 kbps,
	212 kbps,
	424 kbps,
	848 kbps
Operating Temperature	0°C to 70°C (32°F to 158°F)
Storage Temperature	-20°C to 125°C (-4°F to 257°F)
Humidity	Operating: 10 - 90%
	Non-Operating: 5 - 95%
Supply Operating Voltage	4.35 to 5.25 Volts
I/O Voltage	1.8V or 3.3V
Power Consumption	Booster enable, VBAT= 3.3V, VCC_BOOST = 5V
Mode	Power Consumption, Typical
Polling	7.3 mA
Detected Test Tag Type 1	Total 283.8 mA
	Net Module 236.8 mA
Detected Test Tag Type 2	Total 288.8 mA
	Net Module 241.8 mA
Detected Test Tag Type 3	Total 287.7 mA
	Net Module 240.7 mA
Detected Test Tag Type 4	Total 282.3 mA
	Net Module 235.3 mA

	Antenna	Antenna connector, 0.5mm pitch, 7 connector FPC. Antenna matching is external to module.
Realtek RTL8111EPP 1GbE Ethernet Controller	**Connector**	RJ-45
	System Interface	PCI™ (Intel proprietary) + SMBus + USB2
	Data Rates Supported	10 Mbit/s operation (10BASE-T; IEEE 802.3i; IEEE 802.3 clauses 13-14) 100 Mbit/s operation (100BASE-TX; IEEE 802.3u; IEEE 802.3 clauses 21-30) 1000 Mbit/s operation (1000BASE-T; IEEE 802.3ab; IEEE 802.3 clauses 40) Auto-Negotiation (Automatic Speed Selection) Full Duplex Operation at all Speeds Half Duplex operation at 10 & 100 Mbit/s
	IEEE Compliance	IEEE 802.1p QoS (Quality of Service) Support IEEE 802.1q VLAN support IEEE 802.3x Flow Control (IEEE 802.3 clauses 31-32; configurable) IEEE 802.3az EEE (Energy Efficient Ethernet) IEEE802.3 compatible Media Access Controller (MAC)
	Performance	TCP/IP/UDP Checksum Offload (configurable) Protocol Offload (ARP & NS) Large send v1&v2 offload and Giant send offload Jumbo Frame 9K Receiving Side Scaling
	Power Consumption	Cable Disconnection: 25 mW 100Mbps Full Run: 450 mW 1000Mbps Full Run: 1000 mW WoL Enable(S3/S4/S5): 50 mW WoL Disable(S3/S4/S5): 25 mW
	Power Management	ACPI compliant - multiple power modes Situation-sensitive features reduce power consumption

		Advanced link down power saving for reducing link down power consumption
	Management Interface	Auto MDI/MDIX Crossover cable detection
	IT Manageability	Wake-on-LAN from modern standby or sleep state (Magic Packet and Microsoft Wake-Up Frame) Wake-on-LAN from off (Magic Packet only) PXE 2.1 Remote Boot Statistics Gathering (SNMP MIB II, Ethernet-like MIB, Ethernet MIB (802.3x, clause 30))
	Security & Manageability	Support DASH 1.1 compliant/Software KVM ASF 2.0
HP RW220-GL LTE (Low Power) (CAT-1bis)	**Technology/Operating bands**	FDD LTE: 2100 (Band 1), 1800 (Band 3), 850 (Band 5), 900 (Band 8), 700 (Band 12), 850 (Band 18), 850 (Band 19), 800 (Band 20), 850 (Band 26), 700 (Band 28) WIFI Scan : 802.11b
	Wireless Protocol Standards	3GPP TS 51.010-1 V12.9.0: Mobile Station (MS) conformance specification; Part 1: Conformance specification 3GPP TS 36.521-1 V13.3.0: User Equipment (UE) conformance specification; Radio transmission and reception; Part 1: Conformance testing 3GPP TS 21.111 V10.0.0: USIM and IC card requirements 3GPP TS 51.011 V4.15.0: Specification of the Subscriber Identity Module -Mobile Equipment (SIM-ME) interface 3GPP TS 31.102 V10.11.0: Characteristics of the Universal Subscriber Identity Module (USIM) application 3GPP TS 31.111 V10.16.0: Universal Subscriber Identity Module (USIM) Application Toolkit (USAT) 3GPP TS 36.124 V13.2.0: Electro Magnetic Compatibility (EMC) requirements for mobile terminals and ancillary equipment

	3GPP TS 27.007 V10.0.8: AT command set for User Equipment (UE) 3GPP TS 27.005 V10.0.1: Use of Data Terminal Equipment - Data Circuit terminating Equipment (DTE DCE) interface for Short Message Service (SMS) and Cell Broadcast Service (CBS)
GPS	GPS, Galileo, BeiDou, QZSS, AGPS-MS-B
GPS Bands	GPS L1:1575.42Mhz±1.023Mhz, BDS B1:1561.098Mhz±2.046Mhz Galileo E1:1575.42Mhz±1.023Mhz QZSS L1:1575.42Mhz±1.023Mhz
Maximum Data Rates	LTE FDD: 10.00 Mbps (Download), 5.00 Mbps (Upload)
Maximum Output Power	B1/3: 23 +/-2dBm B5/8/12/18/19/20/26/28: 24 +1.7/-2dBm
Maximum Power Consumption	290.945 mA(peak), 8.035 mA(average)
Form Factor	M.2 2242-S3 Key B
Weight	3.9 g (0.138 oz)
Dimensions (Length x Width x Thickness)	42.00 x 22.00 x 2.30 mm (1.65 x 0.87 x 0.09 inch)
Embedded eSIM	Support

1. Wi-Fi 7 requires a Wi-Fi 7 router, sold separately, to function in the 6GHz band. Availability of public wireless access points limited. Wi-Fi 7 is backwards compatible with prior 802.11 specs. And available in countries where Wi-Fi 7 is supported. Wi-Fi 7 is designed to support gigabit data rate when transferring files between two devices connected to the same router. Requires a wireless router, sold separately, that supports 80MHz and higher channels.
2. Receiver sensitivity is measured at a packet error rate of 8% for 802.11b (CKK modulation) and a packet error rate of 10% for 802.11a/g (OFDM modulation).
3. Wi-Fi 6E requires a Wi-Fi 6E router, sold separately to function in the 6GHz band. Availability of public wireless access points limited. Wi-Fi 6E is backwards compatible with prior 802.11 specs. And available in countries where Wi-Fi 6E is supported.
4. Wi-Fi 6E is designed to support gigabit data rate when transferring files between two devices connected to the same router. Requires a wireless router, sold separately.

5. 5G module is optional and must be configured at the factory. Module designed for 5G NR NSA (non-standalone) networks as carriers deploy Evolved-Universal Terrestrial Radio Access New Radio Dual Connectivity (ENDC) with both 100Mhz of 5G NR and LTE channel bandwidth, using 256QAM 4x4 as defined by 3GPP. Module requires activation and separately purchased service contract. Check with service provider for coverage and availability in your area. Data connection, upload and download speeds will vary due to network, location, environment, network conditions, and other factors. Backwards compatible to 4G LTE and 3G HSPA technologies. 5G module planned to be available in select platforms and select countries, where carrier supported.

POWER

Power supply availability may vary by country.

100W Wall Mount Gallium Nitride USB-C AC power adapter	Weight (DC Cable Included)	106 g ± 10 g
	Input	100 Vac ~ 240 Vac
	Input Efficiency	USB-C 90.00 % min at 115 Vac/ 230 Vac @ 20.00 V/ 5.00 A
	Input frequency range	47 Hz ~ 63 Hz
	Input AC current	Max 1.60 A at 90 Vac input
	Output	
	Output power	20.00 V / 100.00 W
	DC output	+ 20.00 V
	Hold - up time	5 ms at 115 Vac input
	Output Over Current Protection	5.40 A (max)
	AC Inlet Type	Fixed 2 Prong
	DC Cable Connector	USB Type-C
	DC Cable Material	Halogen Free
	Connector	
	Connector	Fixed 2 Prong
	DC Plug	USB Type-C
	Environmental Design	
	Operating temperature	0°C to 35°C (32°F to 95°F)
	Non - operating(storage) temperature	-20°C to 85°C (-4°F to 185°F)
	Altitude	0 m to 5000 m (0 ft to 16404.2 ft)
	Humidity	20 % to 95 %
	Storage Humidity	10 % to 95 %
	EMI and Safety Certifications	Worldwide safety standards - IEC60950-1 and IEC62368-1: 2018, EN62368-1:2014+A11, UL62368-1 Agency approvals - C-UL-US, TUV/GS, TUV/PSE, EN55032 Class B, FCC Class B, CISPR32 Class B, CCC and CECP, CU(EAC), EAEU, KCC(Safety+EMC) and K-MEPS, NOM-001 and 029 NYCE,

		NRcan, NRCS, ISC, SEC, PSB, Argentina S-mark, Australia GEMS and RCM, BIS, BSMI, UAE, UKCA DoC
100W Wall Mount Gallium Nitride USB-C AC power adapter	Weight (DC Cable Included)	250 g ± 10 g
	Input	100 Vac ~ 240 Vac
	Input Efficiency	USB-C 90.00 % min at 115 Vac/ 230 Vac @ 20.00 V/ 5.00 A
	Input frequency range	47 Hz ~ 63 Hz
	Input AC current	Max 1.60 A at 90 Vac input
	Output	
	Output power	20.00 V / 100.00 W
	DC output	+ 20.00 V
	Hold - up time	5 ms at 115 Vac input
	Output Over Current Protection	5.40 A (max)
	AC Inlet Type	Foldable for 2 prong
	DC Cable Connector	USB Type-C
	DC Cable Material	Halogen Free
	Connector	
	Connector	Foldable for 2 prong
	DC Plug	USB Type-C
	Environmental Design	
	Operating temperature	0°C to 35°C (32°F to 95°F)
	Non - operating(storage) temperature	-20°C to 85°C (-4°F to 185°F)
	Altitude	0 m to 5000 m (0 ft to 16404.2 ft)
	Humidity	20 % to 95 %
	Storage Humidity	10 % to 95 %
	EMI and Safety Certifications	Worldwide safety standards - IEC60950-1 and IEC62368-1: 2018, EN62368-1:2014+A11, UL62368-1 Agency approvals - C-UL-US, TUV/GS, TUV/PSE, EN55032 Class B, FCC Class B, CISPR32 Class B, CCC and CECP, CU(EAC), EAEU, KCC(Safety+EMC) and K-MEPS, NOM-001 and 029 NYCE,

		NRcan, NRCS, ISC, SEC, PSB, Argentina S-mark, Australia GEMS and RCM, BIS, BSMI, UAE, UKCA DoC
65W Standard USB Type-C® GaN AC power	Weight (DC Cable Included)	185 g ± 10 g
	Input	100 Vac ~ 240 Vac
	Input Efficiency	USB-C 89.00 % min at 115 Vac/ 230 Vac @ 20.00 V/ 3.25 A
	Input frequency range	47 Hz ~ 63 Hz
	Input AC current	Max 1.60 A at 90 Vac input
	Output	
	Output power	20.00 V / 65.00 W
	DC output	+ 20.00 V
	Hold - up time	5 ms at 115 Vac input
	Output Over Current Protection	5.40 A (max)
	AC Inlet Type	C6
	DC Cable Connector	USB Type-C
	DC Cable Material	Low Halogen
	Connector	
	Connector	C6
	DC Plug	USB Type-C
	Environmental Design	
	Operating temperature	0°C to 35°C (32°F to 95°F)
	Non - operating(storage) temperature	-20°C to 85°C (-4°F to 185°F)
	Altitude	0 m to 5000 m (0 ft to 16404.2 ft)
	Humidity	20 % to 95 %
	Storage Humidity	10 % to 95 %
	EMI and Safety Certifications	Worldwide safety standards - IEC60950-1 and IEC62368-1: 2018, EN62368-1:2014+A11, UL62368-1 Agency approvals - C-UL-US, TUV/GS, TUV/PSE, EN55032 Class B, FCC Class B, CISPR32 Class B, CCC and CECP, CU(EAC), EAEU, KCC(Safety+EMC) and K-MEPS, NOM-001 and 029 NYCE,

		NRcan, NRCS, ISC, SEC, PSB, Argentina S-mark, Australia GEMS and RCM, BIS, BSMI, UAE, UKCA DoC
65W Wall Mount Gallium Nitride USB-C AC power adapter	Weight (DC Cable Included)	185 g ± 10 g
	Input	100 Vac ~ 240 Vac
	Input Efficiency	USB-C 89.00 % min at 115 Vac/ 230 Vac @ 20.00 V/ 3.25 A
	Input frequency range	47 Hz ~ 63 Hz
	Input AC current	Max 1.60 A at 90 Vac input
	Output	
	Output power	20.00 V / 65.00 W
	DC output	+ 20.00 V
	Hold - up time	5 ms at 115 Vac input
	Output Over Current Protection	5.40 A (max)
	AC Inlet Type	Foldable for 2 prong
	DC Cable Connector	USB Type-C
	DC Cable Material	Halogen Free
	Connector	
	Connector	Foldable for 2 prong
	DC Plug	USB Type-C
	Environmental Design	
	Operating temperature	0°C to 35°C (32°F to 95°F)
	Non - operating(storage) temperature	-20°C to 85°C (-4°F to 185°F)
	Altitude	0 m to 5000 m (0 ft to 16404.2 ft)
	Humidity	20 % to 95 %
	Storage Humidity	10 % to 95 %
	EMI and Safety Certifications	Worldwide safety standards - IEC60950-1 and IEC62368-1: 2018, EN62368-1:2014+A11, UL62368-1 Agency approvals - C-UL-US, TUV/GS, TUV/PSE, EN55032 Class B, FCC Class B, CISPR32 Class B, CCC and CECP, CU(EAC), EAEU, KCC(Safety+EMC) and K-MEPS, NOM-001 and 029 NYCE,

		NRcan, NRCS, ISC, SEC, PSB, Argentina S-mark, Australia GEMS and RCM, BIS, BSMI, UAE, UKCA DoC
65W Wall Mount Gallium Nitride USB-C AC power adapter	Weight (DC Cable Included)	185 g ± 10 g
	Input	100 Vac ~ 240 Vac
	Input Efficiency	USB-C 89.00 % min at 115 Vac/ 230 Vac @ 20.00 V/ 3.25 A
	Input frequency range	47 Hz ~ 63 Hz
	Input AC current	Max 1.60 A at 90 Vac input
	Output	
	Output power	20.00 V / 65.00 W
	DC output	+ 20.00 V
	Hold - up time	5 ms at 115 Vac input
	Output Over Current Protection	5.50 A (max)
	AC Inlet Type	Fixed 2 Prong
	DC Cable Connector	USB Type-C
	DC Cable Material	Halogen Free
	Connector	
	Connector	Fixed 2 Prong
	DC Plug	USB Type-C
	Environmental Design	
	Operating temperature	0°C to 35°C (32°F to 95°F)
	Non - operating(storage) temperature	-20°C to 85°C (-4°F to 185°F)
	Altitude	0 m to 5000 m (0 ft to 16404.2 ft)
	Humidity	20 % to 95 %
	Storage Humidity	10 % to 95 %
	EMI and Safety Certifications	Worldwide safety standards - IEC60950-1 and IEC62368-1: 2018, EN62368-1:2014+A11, UL62368-1 Agency approvals - C-UL-US, TUV/GS, TUV/PSE, EN55032 Class B, FCC Class B, CISPR32 Class B, CCC and CECP, CU(EAC), EAEU, KCC(Safety+EMC) and K-MEPS, NOM-001 and 029 NYCE,

		NRcan, NRCS, ISC, SEC, PSB, Argentina S-mark, Australia GEMS and RCM, BIS, BSMI, UAE, UKCA DoC
HP 140W Slim USB-C AC power adapter	Weight (DC Cable Included)	420 g ± 10 g
	Input	100 Vac ~ 240 Vac
	Input Efficiency	USB-C 90.00 % min at 115 Vac/ 230 Vac @ 28.00 V/ 5.00 A
	Input frequency range	47 Hz ~ 63 Hz
	Input AC current	Max 2.50 A at 90 Vac input
	Output	
	Output power	28.00 V / 140.00 W
	DC output	+ 28.00 V
	Hold - up time	5 ms at 115 Vac input
	Output Over Current Protection	5.40 A (max)
	AC Inlet Type	C6
	DC Cable Connector	USB Type-C
	DC Cable Material	Low Halogen
	Connector	
	Connector	C6
	DC Plug	USB Type-C
	Environmental Design	
	Operating temperature	0°C to 35°C (32°F to 95°F)
	Non - operating(storage) temperature	-20°C to 85°C (-4°F to 185°F)
	Altitude	0 m to 5000 m (0 ft to 16404.2 ft)
	Humidity	20 % to 95 %
	Storage Humidity	10 % to 95 %
	EMI and Safety Certifications	Worldwide safety standards - IEC60950-1 and IEC62368-1: 2018, EN62368-1:2014+A11, UL62368-1 Agency approvals - C-UL-US, TUV/GS, TUV/PSE, EN55032 Class B, FCC Class B, CISPR32 Class B, CCC and CECP, CU(EAC), EAEU, KCC(Safety+EMC) and K-MEPS, NOM-001 and 029 NYCE,

NRcan, NRCS, ISC, SEC, PSB, Argentina S-mark, Australia GEMS and RCM, BIS, BSMI, UAE, UKCA DoC

Battery

Battery is internal and replaceable by customer. Serviceable by warranty.

MC 68Wh Long Life Polymer Fast charge 3 cell Battery	Weight	251 g ± 10 g (1.55 lb)
	Cells / Type	3 cell Lithium-Ion Polymer /
	Energy	
	Voltage	11.67 V
	Amp - hour capacity	5.830 Ah
	Watt - hour capacity	68Wh.0.00 Wh
	Temperature	
	Operating (Charging)	0°C to 45°C (32°F to 113°F)
	Operating (Discharging)	-10°C to 65°C (14°F to 149°F)
	Optional Travel Battery Available	No
MW 77Whr Long Life Polymer Fast charge 8 cell Battery	Weight	292 g ± 10 g (1.64 lb)
	Cells / Type	8 cell Lithium-Ion Polymer / 406553
	Energy	
	Voltage	15.44 V
	Amp - hour capacity	4.988 Ah
	Watt - hour capacity	77Wh.0.00 Wh
	Temperature	
	Operating (Charging)	0°C to 45°C (32°F to 113°F)
	Operating (Discharging)	-10°C to 65°C (14°F to 149°F)
	Optional Travel Battery Available	No

AUDIO

Privacy panel is only available on select models.

Codec	Realtec ALC3315-CG
Audio I/O Ports	3.5mm Headset: CTIA only; Headphone-out
Internal Speaker Amplifier	TI TAS2783A 23-V Soundwire Mono Smart Amplifier
Multi-streaming Capable	Playback multi-streaming can be enabled in the audio control panel to allow independent audio streams to be sent to/from the front jacks or integrated speaker.
Sampling	DAC: Supports resolutions from 16-bit to 24-bit;48.0 kHz to 48.0 kHz ADC: Supports resolutions from 16-bit to 24-bit;44.1 kHz to 48.0 kHz
Internal Speaker	Yes

FINGERPRINT READER

Sensor vendor	SYNAPTICS
Sensor type	Capacitive
DPI resolution	363 DPI
Scan area	104 x 86 pixels
False Rejection Rate	< 3%
False Acceptance Rate	< 0.001%
Mobile Voltage Operation	2.7 V ~ 3.6 V
Operating Temperature	5°C ~ 60°C (41°F ~ 140°F)
Current Consumption Image	100 mA max
Low Latency Wait For Finger	260 uA
Capture Rate	50 frames/sec
ESD Resistance	IEC 61000-4-2 4B (+15KV)
Detection Matrix	363 dpi / 7.4 x 6.0 mm sensor area

Sensor vendor	ELAN
Sensor type	Capacitive
DPI resolution	363 DPI
Scan area	56 x 56 pixels
False Rejection Rate	< 3%
False Acceptance Rate	< 0.001%
Mobile Voltage Operation	2.8 V ~ 3.6 V
Operating Temperature	-20°C ~ 80°C (-4°F ~ 176°F)
Current Consumption Image	100 mA max
Low Latency Wait For Finger	300 uA
Capture Rate	50 frames/sec
ESD Resistance	IEC 61000-4-2 4B (+15KV)
Detection Matrix	363 dpi / 4.0 x 4.0 mm sensor area

OPTIONS

Container Name	Description	Part Number
Adapters	HP 240W Thunderbolt 4 Cable	BR1W8AA
	HP HDMI to VGA Adapter	H4F02AA,H4F02UT
	HP USB 3.0 to Gigabit RJ45 Adapter G2	4Z7Z7AA,4Z7Z7UT
	HP USB-C to DisplayPort Adapter G2	8Y8Y1AA
	HP USB-C to HDMI 2.0 Adapter	1WC36AA,1WC36UT
	HP USB-C to RJ45 Adapter G2	4Z527AA,4Z527UT
	HP USB-C to USB 3.0 Adapter	N2Z63AA,N2Z63UT
	HP USB-C to VGA Adapter	N9K76AA,N9K76UT
Audio - Earbuds	Poly Voyager Free 60+ Carbon Black Earbuds	7Y8G4AA
	Poly Voyager Free 60+ Carbon Black Earbuds	7Y8H0AA
Audio - Headset	HP USB G2 Stereo Headset	428K6AA,428K6UT
	Poly Blackwire 3210 Monaural USB-C Headset	8X214AA
	Poly Blackwire 3215 Monaural USB-C Headset	8X227AA
	Poly Blackwire 3220 Stereo USB-C Headset	8X228AA
	Poly Blackwire 3225 Stereo USB-C Headset	8X229AA
	Poly Blackwire 3310 Monaural USB-C Headset	8X215AA
	Poly Blackwire 3310 Monaural USB-C Headset	8X216AA
	Poly Blackwire 3315 Monaural USB-C Headset	8X217AA
	Poly Blackwire 3315 Monaural USB-C Headset	8X218AA
	Poly Blackwire 3320 Stereo USB-C Headset	8X219AA
	Poly Blackwire 3320 Stereo USB-C Headset	8X220AA
	Poly Blackwire 3325 Stereo USB-C Headset	8X221AA
	Poly Blackwire 3325 Stereo USB-C Headset	8X222AA
	Poly Blackwire 5210 Monaural USB-C Headset	8X230AA
	Poly Blackwire 5220 Stereo USB-C Headset	8X231AA
	Poly Blackwire 8225 Stereo USB-C Headset	8X223AA
	Poly Blackwire 8225 Stereo USB-C Headset	8X225AA
	Poly EncorePro 320 Binaural Headset	77T26AA
	Poly EncorePro 510 Monaural Headset	783Q2AA
	Poly EncorePro 510 Monoaural Headset	783Q1AA

Poly EncorePro 520 Binaural Headset	783P6AA
Poly EncorePro 520 Binaural Headset	783P7AA
Poly EncorePro 530 Discreet Headset	783P2AA
Poly EncorePro 530 Headset	783P3AA
Poly EncorePro 540 Convertible Headset	783P0AA
Poly EncorePro 540 Convertible Headset	783P1AA
Poly EncorePro 720 Binaural Headset	8R707AA
Poly EncorePro HW710 Single Ear Headset	8R708AA
Poly EncorePro Monoaural 310 Headset	77T43AA
Poly EncorePro Monoaural 515 with USB-A Headset	783R0AA
Poly EncorePro Monoaural 515 with USB-A Headset	783R1AA
Poly EncorePro Stereo 525 with USB-A Headset	783R2AA
Poly EncorePro USB-A Monoaural 715 Headset	783N5AA
Poly EncorePro USB-A Stereo 525 Headset	783R3AA
Poly EncorePro USB-A Stereo 725 Headset	783M6AA
Poly EncorePro USB-C Monoaural 310 Headset	760Q8AA
Poly Savi 7310 DECT 1880-1900 MHz Single Ear Headset	8D3G3AA
Poly Savi 7310 Monaural DECT 1880-1900 MHz Headset	8L561AA
Poly Savi 7310 Monaural DECT 1880-1900 MHz Headset	8L575AA
Poly Savi 7310 Monaural DECT 1920-1930 MHz Headset	7S430AA
Poly Savi 7310 Monaural DECT 1920-1930 MHz Headset	8L570AA
Poly Savi 7310 Monaural DECT 1920-1930 MHz Headset	8L585AA
Poly Savi 7310-M DECT 1880-1900 MHz Single Ear Headset	8D3K7AA
Poly Savi 7310-M DECT 1920-1930 MHz Single Ear Headset	7S439AA
Poly Savi 7320 Stereo DECT 1880-1900 MHz Headset	8D3F7AA
Poly Savi 7320 Stereo DECT 1880-1900 MHz Headset	8L545AA
Poly Savi 7320 Stereo DECT 1880-1900 MHz Headset	8L553AA
Poly Savi 7320 Stereo DECT 1893-1906 MHz Headset	8D3F8AA
Poly Savi 7320 Stereo DECT 1893-1906 MHz Headset	8L546AA
Poly Savi 7320 Stereo DECT 1893-1906 MHz Headset	8L555AA
Poly Savi 7320 Stereo DECT 1910-1920 MHz Headset	8D3G0AA
Poly Savi 7320 Stereo DECT 1920-1930 MHz Headset	7S429AA
Poly Savi 7320 Stereo DECT 1920-1930 MHz Headset	8L549AA

Poly Savi 7320 Stereo DECT 1920-1930 MHz Headset	8L559AA
Poly Savi 7320-M Stereo DECT 1880-1900 MHz Headset	8D3J6AA
Poly Savi 7320-M Stereo DECT 1893-1906 MHz Headset	8D3K2AA
Poly Savi 7320-M Stereo DECT 1910-1920 MHz Headset	8D3K0AA
Poly Savi 7320-M Stereo DECT 1920-1930 MHz Headset	7S435AA
Poly Savi 8210 DECT 1880-1900 MHz USB-A Headset	8D3E9AA
Poly Savi 8210 DECT 1880-1900 MHz USB-A Headset	8D3F1AA
Poly Savi 8210 DECT 1920-1930 MHz USB-A Headset	77T29AA
Poly Savi 8210 DECT 1920-1930 MHz USB-A Headset	77T31AA
Poly Savi 8220 DECT 1880-1900 MHz USB-A Headset	8D3F2AA
Poly Savi 8220 DECT 1880-1900 MHz USB-A Headset	8D3F5AA
Poly Savi 8220 DECT 1920-1930 MHz USB-A Headset	77T33AA
Poly Savi 8220 DECT 1920-1930 MHz USB-A Headset	77Y82AA
Poly Savi 8220 Stereo DECT 1880-1900 MHz Top	8Y9C4AA
Poly Savi 8245 DECT 1880-1900 MHz Headset	8D3H2AA
Poly Savi 8245 DECT 1880-1900 MHz USB-A Headset	8D3F4AA
Poly Savi 8410 Monaural DECT 1880-1900 MHz Headset	8L5A7AA
Poly Savi 8410 Monaural DECT 1880-1900 MHz Headset	8L5A9AA
Poly Savi 8410 Monaural DECT 1920-1930 MHz Headset	8L7E6AA
Poly Savi 8410 Monaural DECT 1920-1930 MHz Headset	8L7E9AA
Poly Savi 8420 Stereo DECT 1880-1900 MHz Headset	8L5B2AA
Poly Savi 8420 Stereo DECT 1880-1900 MHz Headset	8L5B3AA
Poly Savi 8420 Stereo DECT 1920-1930 MHz Headset	8L7F2AA
Poly Savi 8420 Stereo DECT 1920-1930 MHz Headset	8L7F5AA
Poly Savi 8445 DECT 1880-1900 MHz Convertible Headset	8L5B4AA
Poly Savi 8445 DECT 1880-1900 MHz Convertible Headset	8L5B6AA
Poly Savi 8445 DECT 1920-1930 MHz Convertible Headset	8L7F1AA
Poly Savi 8445 DECT 1920-1930 MHz Convertible Headset	8L7F8AA
Poly Voyager 4310 Headset	77Y93AA
Poly Voyager 4310 Monaural Headset	77Y92AA
Poly Voyager 4310 USB-A Headset	76U48AA
Poly Voyager 4310 USB-A Headset	77Y91AA
Poly Voyager 4310 USB-C Headset	77Y94AA

	Poly Voyager 4310 USB-C Headset	77Y95AA
	Poly Voyager 4310 USB-C Headset	77Y96AA
	Poly Voyager 4310-M USB-C Headset	77Y97AA
	Poly Voyager 4320 Headset	77Z00AA
	Poly Voyager 4320 Stereo USB-A Headset	77Y99AA
	Poly Voyager 4320 USB-A Headset	76U49AA
	Poly Voyager 4320 USB-A Headset	77Y98AA
	Poly Voyager 4320 USB-C Headset	76U50AA
	Poly Voyager 4320 USB-C Headset	77Z30AA
	Poly Voyager 4320 USB-C Headset	77Z31AA
	Poly Voyager 4320-M Headset	77Z32AA
	Poly Voyager Focus 2 USB-C-C Headset	9T9J3AA
	Poly Voyager Focus 2 USB-C-C Headset	9T9J5AA
	Poly Voyager Focus 2 USB-C-C Headset	9T9J6AA
	Poly Voyager Legend 50 Headset UC	AT9M9AA,AT9M9UT
	Poly Voyager Legend 50-M Headset UC	AJ8V4AA,AJ8V4UT
	Poly Voyager Surround 80 USB-C Headset	8G7T9AA
	Poly Voyager Surround 80 USB-C Headset	8G7U0AA
	Poly Voyager Surround 85 USB-C Headset	8G7T7AA
	Poly Voyager Surround 85 USB-C Headset	8G7T8AA
Audio - Speaker phone	Poly Sync 10 Speakerphone	77P34AA
	Poly Sync 20 Speakerphone USB-C/A Adapter	B95VJUT
	Poly Sync 20+ Speakerphone	B95VKAA
	Poly Sync 20+M Speakerphone USB-C/A Adapter	B95VLAA
	Poly Sync 20-M Speakerphone USB-C/A Adapter	B95VMUT
	Poly Sync 40 Speakerphone	77P35AA
	Poly Sync 40+ USB-A USB-C Speakerphone	77P36AA
	Poly Sync 40+ USB-A USB-C Speakerphone	772C5AA
	Poly Sync 60 Speakerphone	772C2AA
	Poly Sync 60 Speakerphone	77P41AA
	Poly Sync USB-A USB-C 10 Speakerphone	772C3AA
	Poly Sync USB-A USB-C 40 Speakerphone	772C4AA
Camera	HP 625 Webcam	6Y7L1AA

	HP Streaming 965 Webcam	695J5AA
	HP USB-A 325 Webcam	53X27AA,53X27UT
Cases	HP Campus Core 16 blue Laptop Backpack	B9RB4AA
	HP Campus Core 16 green Laptop Backpack	B9RB5AA
	HP Convertible Laptop Stand	9C2H2AA
	HP Everyday 16 odyssey gray Laptop Backpack	A08KLAA,A08KLUT
	HP Everyday 16 odyssey gray Laptop Bag	A08KKAA
	HP Everyday 16 odyssey gray Laptop Briefcase	A08KHAA,A08KHUT
	HP Renew Business 17.3 Laptop Backpack	3E2U5AA,3E2U5UT
	HP Renew Business 17.3 Laptop Bag	3E2U6AA,3E2U6UT
	HP Renew Executive 16 Laptop Backpack	6B8Y1AA,6B8Y1UT
	HP Renew Executive 16 Laptop Bag	6B8Y2AA
	HP Travel Plus 22 Liter 16 Laptop Bag	A2CE1AA
	HP Travel Plus 30 Liter 17 Laptop Backpack	A2CE0AA
Commodity	HP USB DVD-Writer External ODD	F2B56AA,F2B56UT,Y3T76AA
	HP 14-inch Widescreen Laptop Privacy Filter	BH0M6AA
	HP Combination Nano Cable Lock	63B28AA,63B28UT
	HP Essential Combination Nano Cable Lock	63B31AA,63B31UT
	HP Nano Keyed Cable Lock	1AJ39AA,1AJ39UT
	HP Nano Master Keyed Cable Lock	1AJ40AA,1AJ40UT
	HP SureKey Standard/Nano/Wedge Cable Lock	6UW42AA,6UW42UT
Docking	HP Thunderbolt™ 100W G6 Dock	9X472AA,9X472UT
	HP Thunderbolt™ 180W G6 Dock	9X481AA,9X481UT
	HP Thunderbolt™ 280W G6 Dock	AW5L5AA,AW5M5UT
	HP USB-C™ 100W G6 Dock	9X3V1AA,9X3V1UT
Hub	HP Portable USB-C Hub	B8SU8AA,B8SU8UT
	HP USB-C to USB-A Hub	Z6A00AA,Z6A00UT
Keyboard	HP 125 G2 Wired Keyboard	AY2Y7AA
	HP 125 Wired Keyboard	266C9AA,266C9UT
	HP 225 Wireless Keyboard	805T1AA,805T1UT
	HP 320K G2 Wired Keyboard	9SR37UT
	HP 320K USB Wired Keyboard	9SR37AA,9SR37UT
	HP 355 Compact Multi-Device Keyboard	692S9AA,692S9UT

	HP 405 Backlit Wired Keyboard	7N7C1AA,7N7C1UT
	HP 435 Programmable Wireless Keypad	7N7C3AA
	HP 475 Dual-Mode Wireless Keyboard	7N7B9AA,7N7B9UT
	HP 485 Comfort Wired Keyboard	8T6M2AA
	HP 495K Multi-Device Keyboard	BD5F5AA,BD5F5UT
	HP 585K Multi-Device Keyboard with Palm Rest	BD5F7AA
	HP 685 Comfort Dual-Mode Keyboard	8T6L9AA,8T6L9UT
	HP 725 Multi-Device Rechargeable Wireless Keyboard	9T5B2AA
	HP 965 black Ergonomic Wireless Keyboard	7E756AA
	HP 975 Dual-Mode USB+Bluetooth Wireless Keyboard	3Z726AA,3Z726UT
Keyboard & Mouse Combo	HP 225 Wired Mouse and Keyboard Combo	286J4AA,286J4UT
	HP 225 Wired Mouse and Keyboard Combo	AX2Y7AA
	HP 225 Wired Mouse and Keyboard Combo Cashmere White	AW5S6AA
	HP 235 Wireless Mouse and Keyboard Combo	1Y4D0AA,1Y4D0UT
	HP 685 Comfort Dual-Mode Keyboard and Mouse Combo	8T6L7AA,8T6L7UT
	HP 725 Multi-Device Rechargeable Wireless Keyboard and Mouse Combo	9T5B0AA,9T5B0UT
	HP Multi-Device Dual-Mode Mouse and Keyboard Combo 495C	BE1Q0UT
	HP Multi-Device Dual-Mode Mouse and Keyboard Combo 495C White	BE1M6AA
	HP Multi-Device Dual-Mode Mouse and Keyboard Combo with Palm Rest 585C	BD5F3AA
	HP Wired Desktop 320MK Mouse and Keyboard	9SR36AA,9SR36UT
	HP Wired Desktop 320MK Mouse and Keyboard	9SR36UT
Monitor	HP Series 7 Pro 27 4K Conferencing Monitor	8K135AA
	HP Series 7 Pro 27 4K Thunderbolt 4 Monitor	8J9G2AA
	HP Series 7 Pro 27 QHD Thunderbolt 4 Monitor	8J9E6AA,8J9E6UT
	HP Series 7 Pro 31.5 4K Thunderbolt 4 Docking Monitor	B7JM6AA
	HP Series 7 Pro 31.5 4K Thunderbolt 4 Monitor	8Y2K9AA
	HP Series 7 Pro 34 WQHD Conferencing Monitor	8K157AA,8K157UT
	HP Series 7 Pro 37.5 WQHD+ Thunderbolt 4 Monitor	8K167AA
Mouse	HP 105 Black Wired Mouse	822M9AA,822M9UT
	HP 105 Mouse Pad	8X595AA

	HP 125 Wired Mouse	265A9AA,265A9UT
	HP 128 Laser Wired Mouse	265D9AA,265D9UT
	HP 205 Desk Mat	8X597AA
	HP 235 Slim Wireless Mouse	4E407AA,4E407UT
	HP 245 Black Bluetooth Mouse	81S67AA,81S67UT
	HP 255 Dual Wireless Mouse	8R3U1AA,8R3U1UT
	HP 285 Silent Wireless Mouse	6G4E6AA
	HP 320M Wired Mouse	9VA80AA,9VA80UT
	HP 405 Quiet Black Wireless Mouse	AZ7B3AA
	HP 425 Programmable Wireless Mouse	7M1D5AA
	HP 435 Multi-Device Wireless Mouse	3B4Q5AA,3B4Q5UT
	HP 515 Ultra-Fast Rechargeable Wireless Mouse	9C2F7AA
	HP 685 Comfort Dual-Mode Mouse	8T6M0AA,8T6M0UT
	HP 695 Qi-Charging Wireless Mouse	8F1Y4AA
	HP 705 Rechargeable Wireless Mouse	AZ7B1AA
	HP 715 Rechargeable Multi-Device Bluetooth Mouse	6E6F0AA,6E6F0UT
	HP 925 Ergonomic Vertical Wireless Mouse	6H1A5AA
	HP Tilt Ergonomic Mouse 725M	BH0Z5AA
	HP Travel USB Mouse	G1K28AA
	HP Ultra-Fast Scroll Wireless Mouse 785M	B8YX4AA
Power	HP 110W USB-C Laptop Charger	8B3Y2AA,8B3Y2UT
	HP 140W USB-C Laptop Charger	B7NK0AA

CHANGELOG

Date of change	Version History		Description of change
April 6, 2026	V1 to V2	Added	Environmental Data Section
April 20, 2026	V2 to V3	Added	IEEE 802.11w to Wireless LAN Standards in Mediatek MT7925
18 May, 2026	V3 to V4	Updated	Storage and Drives Section

© Copyright 2026 HP Development Company, L.P. The information contained herein is subject to change without notice. The only warranties for HP products and services are set forth in the express warranty statements accompanying such products and services. Nothing herein should be construed as constituting an additional warranty. HP shall not be liable for technical or editorial errors or omissions contained herein.

Intel, Core, Thunderbolt and Intel vPro are trademarks or registered trademarks of Intel Corporation or its subsidiaries in the United States and other countries. DisplayPort™ and the DisplayPort™ logo are trademarks owned by the Video Electronics Standards Association (VESA®) in the United States and other countries. USB Type-C® and USB-C® are trademarks of USB Implementers Forum. ENERGY STAR is a registered trademark of the U.S. Environmental Protection Agency. Microsoft and Windows are either registered trademarks or trademarks of Microsoft Corporation in the United States and/or other countries.