TC530E/TC530R
Regulatory Guide

Regulatory Information

This device is approved under Zebra Technologies Corporation.

This guide applies to the following model numbers:

- TC530E
- TC530R

All Zebra devices are designed to be compliant with the rules and regulations in the locations they are sold and will be labeled as required.

Local language translation / (BG) Превод на местен език / (CZ) Překlad do místního jazyka / (DE) Übersetzung in die Landessprache / (EL) Μετάφραση τοπικής γλώσσας / (ES) Traducción de idiomas locales / (ET) Kohaliku keele tõlge / (FI) Paikallinen käännös / (FR) Traduction en langue locale / (HR) Prijevod na lokalni jezik / (HU) Helyi nyelvű fordítás / (IT) Traduzione in lingua locale / (JA) 現地語翻訳 / (LT) Vietinės kalbos vertimas / (LV) Tulkojums vietējā valodā / (NL) Vertaling in lokale taal / (PL) Tłumaczenie na język lokalny / (PT) Tradução do idioma local / (RO) Traducere în limba locală / (RU) Перевод на местный язык / (SK) Preklad do miestneho jazyka / (SL) Prevajanje v lokalni jezik / (SR) Превод на локални језик / (SV) Översättning av lokalt språk / (TR) Yerel dil çevirisi / (ZH-CN) 当地语言翻译 / (ZH-TW) 當地語言翻譯 / zebra.com/support

Any changes or modifications to Zebra equipment not expressly approved by Zebra could void the user's authority to operate the equipment.

Declared maximum operating temperature: 50°C

For use only with Zebra approved and UL Listed mobile devices, Zebra approved, and UL Listed/Recognized battery packs.

CAUTION: Only use Zebra approved and NRTL-certified accessories, battery packs, and battery chargers.
Do NOT attempt to charge damp/wet mobile computers, printers or batteries. All components must be dry before connecting to an external power source.

Bluetooth® Wireless Technology

This is an approved Bluetooth® product. For more information on the Bluetooth SIG listing, please visit bluetooth.com.

不在中国之外销售服务和使用

Regulatory Markings

Regulatory markings subject to certification are applied to the device signifying the radio(s) is/are approved for use. Refer to the Declaration of Conformity (DoC) for details of other country markings. The DOC is available at: zebra.com/doc.

The regulatory marks specific to this device (including FCC and ISED) are available on the screen of the device by following these instructions:

Go to **Settings** > **Regulatory**.

ZEBRA and the stylized Zebra head are trademarks of Zebra Technologies Corp., registered in many jurisdictions worldwide. All other trademarks are the property of their respective owners. © 2025 Zebra Technologies Corp. and/or its affiliates. All rights reserved. | zebra.com

Health and Safety Recommendations

Ergonomic Recommendations

In order to avoid or minimize the potential risk of ergonomic injury, always follow good ergonomic workplace practices. Consult with your local Health and Safety Manager to ensure that you are adhering to your company's safety programs to prevent employee injury.

Vehicle Installation

RF signals may affect improperly installed or inadequately shielded electronic systems in motor vehicles (including safety systems). Check with the manufacturer or its representative regarding your vehicle. Ensure the equipment is installed to avoid driver distractions. You should also consult the manufacturer about any equipment that has been added to your vehicle.

Position the device within easy reach. User should be able to access the device without removing their eyes from the road.

IMPORTANT: Before installing or using, check national and local laws regarding distracted driving.

Safety on the Road

Give your full attention to driving. Obey the laws and regulations on the use of wireless devices in the areas where you drive.

The wireless industry reminds you to use your device / phone safely when driving.

Restricted Use Locations

Remember to observe restrictions and obey all signs and instructions on the use of electronic devices in restricted use locations.

Safety in Hospitals and Aircraft

Wireless devices transmit radio frequency energy that may affect medical electrical equipment and aircraft's operation. Wireless devices should be switched off wherever you are requested to do so in hospitals, clinics, healthcare facilities or by airline staff. These requests are designed to prevent possible interference with sensitive equipments.

Medical Devices

It is recommended that a minimum separation distance of 20 cm (8 inches) be maintained between a wireless device and a medical devices such as pacemakers, defibrillator, or other implantable devices to avoid potential interference with the medical device. Pacemaker users should keep the device at the opposite side of the pacemaker or turn OFF the device if suspected of interference.

Please consult your physician or the manufacturer of the medical device to determine if the operation of your wireless product may interfere with the medical device.

RF Exposure Guidelines

Safety Information

Reducing RF Exposure – Use Properly

Only operate the device in accordance with the instructions supplied.

The device complies with internationally recognized standards covering human exposure to electromagnetic fields. For information on international human exposure to electromagnetic fields, refer to the Zebra Declaration of Conformity (DoC) at zebra.com/doc.

Use only Zebra tested and approved headset, belt-clips, holsters, and similar accessories to ensure RF exposure compliance. If applicable, follow the instructions for use as detailed in the accessory guide.

The use of third-party belt clips, holsters, and similar accessories may not comply with RF exposure compliance requirements and should be avoided.

For further information on the safety of RF energy from wireless devices, refer to RF exposure and assessment standards section at zebra.com/responsibility.

Optical Devices

Laser

Class 2 laser scanners use a low power, visible light diode. As with any very bright light source such as the sun, the user should avoid staring directly into the light beam. Momentary exposure to a Class 2 laser is not known to be harmful.

CAUTION: Use of controls, adjustments, or the performance of procedures other than those specified in the supplied product documentation may result in hazardous laser light exposure.

SE5500	Wavelength: 500-570 nm
	Maximum output: 1 mW
	Pulse duration: 4 ms
	Beam divergence: 18 °
	Repetition rate: 16.7 ms

Scanner Labeling

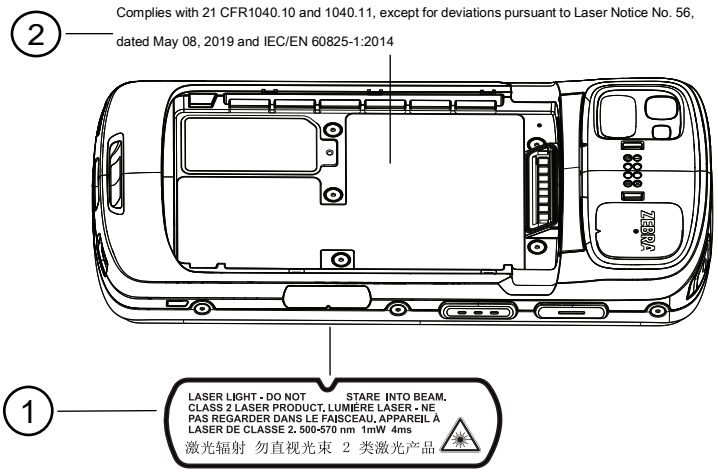

Labels read:

1. Laser Light - Do not stare into the beam. Class 2 Laser product. 500-570mm,1mW, 4 ms.
2. Complies with 21 CFR1040.10 and 1040.11, except for deviations pursuant to Laser Notice No. 56, dated May 08, 2019 and IEC/EN 60825-1:2014.

LED Devices

Classified as “EXEMPT RISK GROUP” according to IEC 62471:2006 and EN62471:2008.

- Pulse Duration of 17.7 ms for SE4720.
- Pulse Duration of CW for SE5500.

Power Supply

WARNING ELECTRICAL SHOCK: Use only a Zebra approved, Certified ITE SELV power supply with appropriate electrical ratings. Use of alternative power supply will invalidate any approvals given to this unit and may be dangerous.

Batteries and Power Packs

This information applies to Zebra-approved batteries and power packs containing batteries.

Battery Information

CAUTION: Risk of explosion if battery is replaced by an incorrect type. Dispose of batteries according to instructions.

Use only Zebra approved batteries. Accessories which have battery charging capability are approved for use with the following battery models:

- Model BT-000442 (3.85 VDC, 4680 mAh)
- Model BT-000442B (3.85 VDC, 4680 mAh)

- Model BT-000442A (3.85 VDC, 7000 mAh)
- Model BT-000442C (3.85 VDC, 4680 mAh)

Zebra approved rechargeable battery packs are designed and constructed to the highest standards within the industry.

However, there are limitations as to how long a battery can operate or be stored before needing replacement. Many factors affect the actual life cycle of a battery pack such as heat, cold, harsh environmental conditions, and severe drops.

When batteries are stored over six months, some irreversible deterioration in overall battery quality may occur. Store batteries at half charge in a dry, cool place, removed from the equipment to prevent loss of capacity, rusting of metallic parts, and electrolyte leakage. When storing batteries for one year or longer, the charge level should be verified at least once a year and charged to half charge.

Replace the battery when a significant loss of run time is detected.

- Standard warranty period for all Zebra batteries is one year, regardless if the battery was purchased separately or included as part of the host device. For more information on Zebra batteries, please visit: zebra.com/batterydocumentation and select the Battery Best Practices link.

Battery Safety Guidelines



IMPORTANT – SAFETY INSTRUCTIONS – SAVE THESE INSTRUCTIONS

WARNING – When using this product basic safety precautions should always be followed, including the following:

- The area in which the units are charged should be clear of debris and combustible materials or chemicals. Particular care should be taken where the device is charged in a non-commercial environment.
- Read all the instructions before using the product.
- Follow battery usage, storage, and charging guidelines found in the user's guide.
- Improper battery use may result in a fire, explosion, or other hazard.
- Batteries subjected to extremely low air pressure may result in an explosion or the leakage of flammable liquid or gas.
- To charge the mobile device battery, the battery and charger temperatures must be between 0°C and 40°C (32°F and 104°F).
- Do not use incompatible batteries and chargers. Use of an incompatible battery or charger may present a risk of fire, explosion, leakage, or other hazard. If you have any questions about the compatibility of a battery or a charger, contact Zebra support.
- Do not disassemble or open, crush, bend or deform, puncture, or shred. Damaged or modified batteries may exhibit unpredictable behavior resulting in fire, explosion, or risk of injury.
- Severe impact from dropping any battery-operated device on a hard surface could cause the battery to overheat.
- Do not short circuit a battery or allow metallic or conductive objects to contact the battery terminals.
- Do not modify, disassemble, or remanufacture, attempt to insert foreign objects into the battery, immerse or expose to water, rain, snow or other liquids, or expose to fire, explosion, or other hazard.
- Do not leave or store the equipment in or near areas that might get very hot, such as in a parked vehicle or near a radiator or other heat source. Do not place battery into a microwave oven or dryer.

- To reduce the risk of injury, close supervision is necessary when used near children.
- Please follow local regulations to promptly dispose of used re-chargeable batteries.
- Do not dispose of batteries in fire. Exposure to temperatures over 100°C (212°F) may cause explosion.
- Seek medical advice immediately if a battery has been swallowed.
- In the event of a battery leak, do not allow the liquid to come in contact with the skin or eyes. If contact has been made, wash the affected area with large amounts of water and seek medical advice.
- If you suspect damage to your equipment or battery, contact Zebra support to arrange for inspection.

CE Marking and European Economic Area (EEA)

Statement of Compliance

Zebra hereby declares that this radio equipment is in compliance with Directives 2014/53/EU and 2011/65/EU.

Any radio operation limitations within EEA countries are identified in Appendix A of EU Declaration of Conformity. The full text of the EU Declaration of Conformity is available at: zebra.com/doc.

EU Importer: Zebra Technologies B.V
Address: Mercurius 12, 8448 GX Heerenveen, Netherlands

Waste Electrical and Electronic Equipment (WEEE)

For EU and UK Customers: For products at the end of their life, please refer to recycling/disposal advice at: zebra.com/weee.

United States and Canada Regulatory

Radio Frequency Interference Notices

This device complies with Part 15 of the FCC Rules. Operation is subject to the following two conditions: (1) this device may not cause harmful interference, and (2) this device must accept any interference received including interference that may cause undesired operation.

NOTE: This equipment has been tested and found to comply with the limits for a Class B digital device, pursuant to Part 15 of the FCC rules.These limits are designed to provide reasonable protection against harmful interference in a residential installation. This equipment generates, uses and can radiate radio frequency energy and, if not installed and used in accordance with the instructions, may cause harmful interference to radio communications. However, there is no guarantee that interference will not occur in a particular installation. If this equipment does cause harmful interference to radio or television reception, which can be determined by turning the equipment off and on, the user is encouraged to try to correct the interference by one or more of the following measures:

- Reorient or relocate the receiving antenna.
- Increase the separation between the equipment and receiver.
- Connect the equipment into an outlet on a circuit different from that to which the receiver is connected.
- Consult the dealer or an experienced radio/TV technician for help.
- Operation of transmitters in the 5.925-7.125 GHz band is prohibited for control of or communications with unmanned aircraft systems.

Radio Frequency Interference Requirements – Canada

Innovation, Science and Economic Development Canada ICES-003 Compliance Label: CAN ICES-003 (B)/NMB-003(B)

This device complies with Innovation, Science and Economic Development Canada’s licence-exempt RSSs. Operation is subject to the following two conditions: (1) This device may not cause interference; and (2) This device must accept any interference, including interference that may cause undesired operation of the device.

L’émetteur/récepteur exempt de licence contenu dans le présent appareil est conforme aux CNR d’Innovation, Sciences et Développement économique Canada applicables aux appareils radio exempts de licence. L’exploitation est autorisée aux deux conditions suivantes : (1) l'appareil ne doit pas produire de brouillage, et (2) l'utilisateur de l'appareil doit accepter tout brouillage radio électrique subi même si le brouillage est susceptible d'en compromettre le fonctionnement.

This device is restricted to indoor use when operating in the 5150 to 5350 MHz frequency range.

Lorsqu'il fonctionne dans la plage de fréquences 5150- 5350 MHz, cet appareil doit être utilisé exclusivement en extérieur.

Devices shall not be used for control of or communications with unmanned aircraft systems.

Les dispositifs ne doivent pas être utilisés pour commander des systèmes d’aéronef sans pilote ni pour communiquer avec de tels systèmes.

RF Exposure Requirements - FCC and ISED

The FCC has granted an Equipment Authorization for this device with all reported SAR levels evaluated in compliance with the FCC RF emission guidelines. SAR information on this device is on file with the FCC and can be found under the Display Grant section of fcc.gov/oet/ea/fccid.

To ensure compliance with FCC/ISED RF exposure requirement, the user shall keep the front of the RFID Device transmitting antenna at least 1.5 cm away from any nearby persons.

Pour assurer la conformité avec l'exigence d'exposition aux radiofréquences USED, l'utilisateur doit garder l'avant de l'antenne d'émission du dispositif RFID à au moins 1.5 cm de toute personne à proximité.

To satisfy RF exposure requirements, this device must be hand-held only and, where applicable use only with Zebra tested and approved accessories.

Pour être conforme à la réglementation relative à l'exposition RF, cet appareil doit être uniquement porté au poignet ou à la cheville et, lorsque cela est applicable, utilisé uniquement avec des accessoires testés et approuvés par Zebra.

Hotspot Mode

To satisfy RF exposure requirements in hotspot mode, this device must operate with a minimum separation distance of 1.0 cm or more from a user's body and nearby persons.

Pour satisfaire aux exigences d'exposition RF en mode hotspot, cet appareil doit fonctionner avec une distance de séparation minimale de 1,0 cm ou plus du corps de l'utilisateur et des personnes à proximité.

This equipment complies with RF Exposure limits established for an uncontrolled environment (General Population). This equipment should be installed and operated in such a way that a separation distance of greater than 1 centimeter is maintained between the transmitter's radiating structure(s) and the body of the user or nearby persons.

Cet équipement est conforme aux limites d'exposition aux RF établies pour un environnement non contrôlé (population générale). Cet équipement doit être installé et utilisé de manière à maintenir une distance de séparation supérieure à 1 centimètre entre la (les) structure (s) rayonnante (s) de l'émetteur et le corps de l'utilisateur ou des personnes à proximité.

Co-located Statement

To comply with FCC RF exposure compliance requirement, the antenna used for this transmitter must not be co-located (within 20 cm) or operating in conjunction with any other transmitter/antenna except those already approved in this filling.

Hotspot ISED Notice

When operating in hotspot mode, this device is restricted to indoor use when operating in the 5150 - 5350 MHz frequency range.

En mode de connexion partagée (hotspot), l'utilisation de cet appareil doit se faire exclusivement en extérieur lorsqu'il fonctionne dans la plage de fréquences 5 150 - 5 350 MHz.

This device is marked HAC showing compliance with the applicable requirements of FCC Part 68 and ISED CS-03-Part 5.

日本 (Japan)



このデバイスと一緒に販売されている充電式バッテリーには、回収、処理、リサイクルできる貴重な金属やその他の素材が含まれています。充電式バッテリー パックを安全に廃棄する方法については、最寄りのリサイクル センターにお問い合わせください。

Brazil

Este equipamento não tem direito à proteção contra interferência prejudicial e não pode causar interferência em sistemas devidamente autorizados. Este produto está homologado pela Anatel de acordo com os procedimentos regulamentados para avaliação da conformidade de produtos para telecomunicações e atende aos requisitos técnicos aplicáveis, incluindo os limites da medida da exposição humana referente a campos elétricos, magnéticos e eletromagné ttos de radiofrequência.

中国 (China)

通过访问以下网址可下载当地语言支持的产品说明书 zebra.com/support

如果配套使用外部电源适配器，请确保其已通过 CCC 认证

（一） 符合“微功率短距离无线电发射设备目录和技术要求”的具体条款和使用场景，采用的天线类型和性能，控制、调整及开关等使用方法；

（二）不得擅自改变使用场景或使用条件、扩大发射频率范围、加大发射功率（包括额　外加装射频功率放大器），不得擅自更改发射天线；

（三）不得对其他合法的无线电台（站）产生有害干扰，也不得提出免受有害干扰保护；

（四）应当承受辐射射频能量的工业、科学及医疗（ISM）应用设备的干扰或其他合法的无线电台（站）干扰；

（五）如对其他合法的无线电台（站）产生有害干扰时，应立即停止使用，并采取措施消除干扰后方可继续使用；

（六）在航空器内和依据法律法规、国家有关规定、标准划设的射电天文台、气象雷达站、卫星地球站（含测控、测距、接收、导航站）等军民用无线电台（站）、机场等的电磁环境保护区域内使用微功率设备，应当遵守电磁环境保护及相关行业主管部门的规定；

（七）禁止在以机场跑道中心点为圆心、半径 5000 米的区域内使用各类模型遥控器；

（八）有关支持的工作环境条件，请参阅本指南的最高工作温度以及电池信息和电源信息部分。



产品中有害物质的名称及含量

部件名称 (Parts)	有害物质					
	铅 (Pb)	汞 (Hg)	镉 (Cd)	六价铬 (Cr(VI))	多溴联苯 (PBB)	多溴二苯醚 (PBDE)
金属部件	X	O	O	O	O	O
电路模块	X	O	O	O	O	O
塑料和聚合物部件	O	O	O	O	O	O
光学和光学组件	O	O	O	O	O	O
电池	X	O	O	O	O	O

本表格依据 SJ/T 11364 的规定编制。

O: 表示该有害物质在该部件所有均质材料中的含量均在 GB/T 26572 规定的限量要求以下。

X: 表示该有害物质至少在该部件的某一均质材料中的含量超出 GB/T 26572 规定的限量要求。(企业可在此处，根据实际情况对上表中打 “x” 的技术原因进行进一步说明。

Hong Kong

5.15 - 5.35 GHz band is restricted to indoor use.

France

Cet appareil a été testé et déclaré conforme aux limites applicables d'exposition aux radiofréquences (RF).

Le débit d'absorption spécifique (DAS) local quantifie l'exposition de l'utilisateur aux ondes électromagnétiques de l'équipement concerné.

Les valeurs SAR les plus élevées sont disponibles sur la déclaration de conformité (DoC) disponible sur: www.zebra.com/doc

México

La operación de este equipo está sujeta a las siguientes dos condiciones: (1) es posible que este equipo o dispositivo no cause interferencia perjudicial y (2) este equipo o dispositivo debe aceptar cualquier interferencia, incluyendo la que pueda causar su operación no deseada.

한국 (South Korea)

전자파흡수율

본 제품의 전자파흡수율은 과학기술정보통신부의 「전자파 인체보호기준」을 만족합니다 . 본 제품은 국립전파연구원의「전자파흡수율 측정기준」에 따라 최대 출력 조건에서 머리에 근접하여 시험되었으며 , 최대 전자파흡수율 측정값은 다음과 같습니다 .

모델명 : TC530E

전자파흡수율 (SAR : Specified Absorption Rate) 은 휴대전화를 사용할 때 인체에 흡수될 수 있는 전자파의 양으로 우리나라는 국제권고기준인 2 W/kg 보다 엄격한 1.6 W/kg 기준을 적용하고 있습니다 .



본 기기는 인체로부터 10 mm 이격하여 사용하는 것을 권장합니다 .

그러나 일상생활에서는 최대출력보다 현저히 낮은 출력 상태에서 통신이 이루어지므로 전자파흡수율은 위 시험 결과보다 매우 낮습니다 .

전자파흡율에 대한 자세한 정보는 국립전파연구원 (rra.go.kr) 또는 제조사 홈페이지에서 확인할 수 있습니다 .

臺灣 (Taiwan)

低功率電波輻射性電機管理辦法

取得審驗證明之低功率射頻器材，非經核准，公司、商號或使用者均不得擅自變更頻率、加大功率或變更原設計之特性及功能。

低功率射頻器材之使用不得影響飛航安全及干擾合法通信；經發現有干擾現象時，應立即停用，並改善至無干擾時方得繼續使用。

前述合法通信，指依電信管理法規定作業之無線電通信。低功率射頻器材須忍受合法通信或工業、科學及醫療用電波輻射性電機設備之干擾。

應避免影響附近雷達系統之操作

公司資訊

台灣斑馬科技股份有限公司 / 台北市信義區松高路 9 號 13 樓



行政院環保署 (EPA) 要求乾電池製造或進口商，需依廢棄物清理法第 15 條之規定，於販售、贈送或促銷的電池上標示回收標誌。請聯絡合格的台灣回收廠商，以正確棄置電池。

限用物質含有情況標示聲明書

設備名稱 移動式電腦			型號（型式）TC530E/TC530R			
單元 Unit	限用物質及其化學符號 Restricted substances and its chemical symbols					
	鉛 (Pb)	汞 (Hg)	鎘 (Cd)	六價鉻 (Cr+6)	多溴聯苯 (PBB)	多溴二苯醚 (PBDE)
印刷電路板及電子組件	−	O	O	O	O	O
金屬零件	−	O	O	O	O	O
電纜及電纜組件	O	O	O	O	O	O
塑料和聚合物零件	O	O	O	O	O	O
光學與光學元件	O	O	O	O	O	O

備考 1. 〝超出 0.1 wt %〞及〝超出 0.01 wt %〞係指限用物質之百分比含量超出百分比含量基準值。

備考 2. 〝O〞係指該項限用物質之百分比含量未超出百分比含量基準值。

備考 3. 〝−〞係指該項限用物質為排除項目。

Note 1: “Exceeding 0.1 wt%” and “exceeding 0.01 wt%” indicate that the percentage content of the restricted substance exceeds the reference percentage value of presence condition.
Note 2: “O” indicates that the percentage content of the restricted substance does not exceed the percentage of reference value of presence.
Note 3: The “ − ” indicates that the restricted substance corresponds to the exemption.

TÜRK WEEE Uyumluluk Beyanı

EEE Yönetmeliğine Uygundur.

ประเทศไทย

เครื่ องวิ ทยุ คมนาคมนี้ มี อั ตราการดู ดกลื นพลั งงานจำ เพาะ (Specific Absorption Rate – SAR) อั นเนื่ องมาจากเครื่ องวิ ทยุ คมนาคมเท่ ากั บ

- TC530E 1.18 w/kg

ซึ่งสอดคล้องตามมาตรฐานความปลอดภัยต่อสุขภาพของมนุษย์จากการใช้เครื่องวิทยุคมนาคมที่คณะกรรมการกิจการโทรคมนาคมแห่ งชาติ ประกาศกำ หนด

United Kingdom

Statement of Compliance

Zebra hereby declares that this radio equipment is in compliance with the Radio Equipment Regulations 2017 and the Restriction of the Use of Certain Hazardous Substances in Electrical and Electronic Equipment Regulations 2012.

Any radio operation limitations within UK are identified in Appendix A of UK Declaration of Conformity.

The full text of the UK Declaration of Conformity is available at: zebra.com/doc.

UK Importer: Zebra Technologies Europe Limited

Address:

Dukes Meadow, Millboard Rd, Bourne End, Buckinghamshire, SL8 5XF

Warranty

For the complete Zebra hardware product warranty statement, go to: zebra.com\warranty.

Service Information

Before you use the unit, it must be configured to operate in your facility's network and run your applications.

If you have a problem running your unit or using your equipment, contact your facility's Technical or System Support. If there is a problem with the equipment, they will contact Zebra support at zebra.com/support.

For the latest version of the guide go to: zebra.com\support.

Software Support

Zebra wants to ensure that customers have the latest entitled software at the time of device purchase in order to keep the device operating at peak performance levels. To confirm that your Zebra device has the latest entitled software available at the time of purchase, go to zebra.com/support.

Check for the latest software from **Support > Products**, or search for the device and select **Support > Software Downloads**.

If your device does not have the latest entitled software as of your device purchase date, email Zebra at entitlementservices@zebra.com and ensure you include the following essential device information:

- Model number
- Serial number
- Proof of purchase
- Title of the software download you are requesting.

If it is determined by Zebra that your device is entitled to the latest version of software, as of the date you purchased your device, you will receive an email containing a link directing you to a Zebra website to download the appropriate software.

Product Support Information

- For information on using this product, see the user guide at zebra.com/support.
- To find quick answers to known product behaviors, access our knowledge articles at supportcommunity.zebra.com/s/knowledge-base.
- Ask your questions in our Support community at supportcommunity.zebra.com.
- Download product manuals, drivers, software, and view how-to videos at zebra.com/support.
- To request a repair for your product, go to zebra.com/repair.

Patent Information

To view Zebra patents, go to ip.zebra.com.