Maintenance and Service Guide

HP Envy 17.3 inch Laptop PC
Model numbers: 17-da0xxx

SUMMARY

This guide provides maintenance information about such topics as spare parts, removal and replacement of parts, security, and backing up.

Legal information

© Copyright 2024 HP Development Company, L.P.

Bluetooth is a trademark owned by its proprietor and used by HP Inc. under license. Intel, Core, Thunderbolt and the Thunderbolt logo are trademarks of Intel Corporation or its subsidiaries in the U.S. and/or other countries. Copilot and Windows are either registered trademarks or trademarks of Microsoft Corporation in the United States and/or other countries. NVIDIA and GeForce RTX are trademarks and/or registered trademarks of NVIDIA Corporation in the U.S. and other countries. USB Gen4, USB Type-C, and USB-C are registered trademarks of USB Implementers Forum. DisplayPort™ and the DisplayPort™ logo are trademarks owned by the Video Electronics Standards Association (VESA®) in the United States and other countries. Miracast and Wi-Fi are registered trademarks of Wi-Fi Alliance.

The information contained herein is subject to change without notice. The only warranties for HP products and services are set forth in the express warranty statements accompanying such products and services. Nothing herein should be construed as constituting an additional warranty. HP shall not be liable for technical or editorial errors or omissions contained herein.

First Edition: March 2024

Document Part Number: N75072-001

Product notice

This guide describes features that are common to most models. Some features may not be available on your computer.

Not all features are available in all editions or versions of Windows. Systems may require upgraded and/or separately purchased hardware, drivers, software or BIOS update to take full advantage of Windows functionality. Windows is automatically updated, which is always enabled. High-speed internet and Microsoft account required. ISP fees may apply and additional requirements may apply over time for updates. See http://www.windows.com. **If your product ships with Windows in S Mode:** Windows in S Mode works exclusively with apps from the Microsoft Store within Windows. Certain default settings, features, and apps cannot be changed. Some accessories and apps that are compatible with Windows may not work (including some antivirus, PDF writers, driver utilities, and accessibility apps), and performance may vary, even if you switch out of S Mode. If you switch to Windows, you cannot switch back to S Mode. Learn more at Windows.com/SmodeFAQ.

To access the latest user guides, go to http://www.hp.com/support, and follow the instructions to find your product. Then select **Manuals**.

Software terms

By installing, copying, downloading, or otherwise using any software product preinstalled on this computer, you agree to be bound by the terms of the HP End User License Agreement (EULA). If you do not accept these license terms, your sole remedy is to return the entire unused product (hardware and software) within 14 days for a full refund subject to the refund policy of your seller.

For any further information or to request a full refund of the price of the computer, please contact your seller.

Safety warning notice

Reduce the possibility of heat-related injuries or of overheating the computer by following the practices described.

⚠ **WARNING!** To reduce the possibility of heat-related injuries or of overheating the computer, do not place the computer directly on your lap or obstruct the computer air vents. Use the computer only on a hard, flat surface. Do not allow another hard surface, such as an adjoining optional printer, or a soft surface, such as pillows or rugs or clothing, to block airflow. Also, do not allow the AC adapter to come into contact with the skin or a soft surface, such as pillows or rugs or clothing, during operation. The computer and the AC adapter provided by HP comply with the user-accessible surface temperature limits defined by applicable safety standards.

Table of contents

1 Product description 1

2 Getting to know your computer 5

Right side 5

Left side 5

Display 7

Low blue light mode (select products only) 7

IMAX Enhanced Mode (select products only) 7

Wake-on-voice (select products only) 7

Keyboard area 9

Touchpad settings and components 9

Touchpad settings 9

Adjusting touchpad settings 9

Turning on the touchpad 9

Touchpad components 9

Lights 10

Special keys 11

Bottom 12

Labels 13

3 Illustrated parts catalog 16

Computer major components 16

Display assembly subcomponents 18

Miscellaneous parts 19

4 Removal and replacement procedures preliminary requirements 20

Tools required 20

Service considerations 20

Plastic parts 20

Cables and connectors 20

Drive handling 20

Electrostatic discharge information 21

Generating static electricity 21

Preventing electrostatic damage to equipment 22

Personal grounding methods and equipment 22

Grounding the work area 23

Recommended materials and equipment 23

Cleaning your computer 24

Enabling HP Easy Clean (select products only) 24

Removing dirt and debris from your computer 24

Cleaning your computer with a disinfectant 25

Caring for wood veneer (select products only) 26
Packaging and transporting guidelines 26
Accessing support information 27
5 Removal and replacement procedures for authorized service provider parts 29
Component replacement procedures 29
Preparation for disassembly 29
Bottom cover 29
Battery 31
Solid-state drive 32
Memory modules 34
WLAN module 36
Fans 38
Speakers 39
Touchpad 40
USB/audio board 41
Heat sink 42
System board 44
IR board 47
Display assembly 47
Top cover with keyboard 56
6 Using Setup Utility (BIOS) 58
Starting Setup Utility (BIOS) 58
Updating Setup Utility (BIOS) 58
Determining the BIOS version 58
Preparing for a BIOS update 59
Downloading a BIOS update 59
Installing a BIOS update 59
7 Using HP PC Hardware Diagnostics 61
Using HP PC Hardware Diagnostics Windows (select products only) 61
Using an HP PC Hardware Diagnostics Windows hardware failure ID code 61
Accessing HP PC Hardware Diagnostics Windows 61
Accessing HP PC Hardware Diagnostics Windows from HP Support Assistant 61
Accessing HP PC Hardware Diagnostics Windows from the Start menu (select products only) 62
Downloading HP PC Hardware Diagnostics Windows 62
Downloading the latest HP PC Hardware Diagnostics Windows version from HP 62
Downloading the HP PC Hardware Diagnostics Windows from the Microsoft Store 62
Downloading HP Hardware Diagnostics Windows by product name or number (select products only) 62
Installing HP PC Hardware Diagnostics Windows 63
Using HP PC Hardware Diagnostics UEFI 63
Using an HP PC Hardware Diagnostics UEFI hardware failure ID code 63
Starting HP PC Hardware Diagnostics UEFI 63
Starting HP PC Hardware Diagnostics UEFI through HP Hotkey Support software (select products only) 64
Downloading HP PC Hardware Diagnostics UEFI to a USB flash drive 64

Downloading the latest HP PC Hardware Diagnostics UEFI version ... 65
Downloading HP PC Hardware Diagnostics UEFI by product name or number (select products only) ... 65
Using Remote HP PC Hardware Diagnostics UEFI settings (select products only) ... 65
Downloading Remote HP PC Hardware Diagnostics UEFI ... 65
Downloading the latest Remote HP PC Hardware Diagnostics UEFI version ... 65
Downloading Remote HP PC Hardware Diagnostics UEFI by product name or number ... 65
Customizing Remote HP PC Hardware Diagnostics UEFI settings ... 66
8 Backing up, restoring, and recovering ... 67
Backing up information and creating recovery media ... 67
Using Windows tools for backing up ... 67
Using the HP Cloud Recovery Download Tool to create recovery media (select products only) ... 67
Restoring and recovering your system ... 67
Creating a system restore ... 68
Restoring and recovery methods ... 68
Recovering using HP Recovery media ... 68
Changing the computer boot order ... 69
Using HP Sure Recover (select products only) ... 69
9 Specifications ... 70
Computer specifications ... 70
Display specifications ... 71
Solid-state drive specifications ... 71
10 Power cord set requirements ... 73
Requirements for all countries ... 73
Requirements for specific countries and regions ... 73
11 Recycling ... 76
Index ... 77

1 Product description

This table provides detailed product information.

Table 1-1 Product components and their descriptions

Category	Description
Product Name	**HP Envy 17.3 inch Laptop PC**
	Model number: 17-da0xxx
	CTO model: 17t-da000
Processor	Intel® Core® Ultra7 155U processor (turbo up to 4.8 GHz, 12 MB cache, 10 cores, 15 W)
	Intel Core Ultra7 155H processor (turbo up to 4.8 GHz, 24 MB cache, 16 cores, 28 W)
	Intel Core Ultra5 125H processor (turbo up to 4.5 GHz, 18 MB cache, 14 cores, 28 W)
Graphics controller	**Integrated graphics**
	Intel Graphics (155U processor)
	Intel Arc Graphics (155H/125H processor)
	Discrete graphics
	NVIDIA® GeForce RTX® 3050 Graphics Controller
	Supports HD decode, DX12, and HDMI
Display	**43.9 cm (17.3 in)** Full high-definition (FHD) (1920 × 1080), light-emitting diode (LED), antiglare, ultrawide viewing angle (UWVA), 100% sRGB, embedded DisplayPort (eDP) 1.2 without panel self-refresh, 300 nits
	Flicker free
	Microsoft HDR streaming capable
Memory	Two memory slots supporting up to 32 GB of RAM (not accessible or upgradeable)
	SODIMM, DDR5-5600, 1.1v, dual channel support
	Supports the following configurations:
	• 32 GB
	• 16 GB
Primary storage	**Solid-state drives, PCIe, NVMe, M2.2280**
	2 TB, PCIe-4 × 4, three layer cell (TLC)
	1 TB
	512 GB
Audio	Dual speakers
	Supports Far Field Cortana
	Poly Studio

Table 1-1 Product components and their descriptions (continued)

Category	Description
	Supports DTS: X Ultra
	HP Audio Boost 2.0
	Supports XiaoWei
Video	HP Wide Vision 5 MP camera - indicator LED, USB 2.0, infrared (IR) LED, 5 MP BSI sensor, f2.0, 88° wide field-of-view (WFOV)
	Dual-array, digital microphone with appropriate beam forming software, echo cancellation, noise suppression
Wireless	**Wireless Local Area Network (WLAN)**
	• Intel AX211 Wi-Fi® 6E Bluetooth® 5.3 WLAN
	• Intel Wi-Fi 7 BE200 + Bluetooth 5.4 WLAN, non-vPro
	Support for Miracast®
	Supports Modern Standby (connected)
	Wi-Fi BIOS SAR
	Bluetooth LE Audio
	Bluetooth Audio Offload
	Dynamic Antenna Gain
	WLAN Time Average SAR
Ports	Audio-out (headphone)/audio-in (microphone) combo jack
	HDMI v2.1 output up to 4K @ 60 Hz
	USB 3.2 Gen 2 Type-A ports (2 right side, 1 left side), supporting: - HP Sleep & Charge (left side)
	USB 3.2 Gen 2 Type-C port, left side, supporting: - DisplayPort 2.1 - HDMI 2.1 out up to 4 K (60 Hz) with HDCP 2.3 - Power delivery - Data transfer - HP Sleep & Charge
	USB 4 Type-C® Gen4® Thunderbolt™ 4 port, left side, supports: - DisplayPort 2.1 - HDMI 2.1 out up to 4 K (60 Hz) with HDCP 2.3 - Power delivery - Data transfer - HP Sleep & Charge
Keyboard/pointing devices	**Backlit keyboard with image sensor and numeric keypad**

Table 1-1 Product components and their descriptions (continued)

Category	Description
	Touch requirements
	Clickpad with image sensor
	Multitouch gestures enabled
	Precision touchpad
	Modern trackpad gestures
	Taps enabled as default
Power requirements	**Battery**
	6 cell, 83 Whr
	Long life
	Fast charge
	HP USB-C® AC adapter
	65 W
	100 W
	Power cord
	C5, premium, 1.0 m (3.3 ft)
Security	Microphone mute
	Camera privacy cover
	Trusted Platform Module (TPM) 2.0, firmware
	TPM 2.0, discrete
Sensors	Accelerometer
	IR thermal sensor
Operating system	Windows® 11 Pro
	Windows 11 Pro High End
	Windows 11 Pro High End China
	Windows 11 Pro China
	Windows 11 Pro Value
	Windows 11 Pro Value China
	Windows 11 Pro Entry
	Windows 11 Pro Entry China
	Windows 11 Home 64 Desktop AIO Chinese Market CPPP
	Windows 11 Home in S Mode for Developed Markets (ML)
	Windows 11 Home in S Mode for Emerging Markets (EM/SL)
	Windows 11 Home in S Mode for China Market
	Windows 11 Home in S Mode for APAC Markets

Table 1-1 Product components and their descriptions (continued)

Category	Description
	Windows 11 Home in S Mode for Africa Markets
	Windows 11 Home in S Mode for Indonesia Market
	Windows 11 Home in S Mode for India Market
	Windows 11 Home for Developed Market (ML)
	Windows 11 Home for Developed Market (ML)
	Windows 11 Home for Emerging Market (EM/SL)
	Windows 11 Home for China Market
	Windows 11 Home for India Market
	Windows 11 Home for Indonesia Market
	Windows 11 Home for APAC Market
	Windows 11 Home for Africa PPP Market
Serviceability	AC adapter

2 Getting to know your computer

Your computer features top-rated components. This chapter provides details about your components, where they are located, and how they work.

Right side

Identify the components on the right side of the computer.

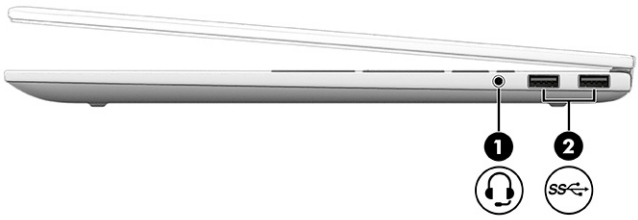

Table 2-1 **Right-side components and their descriptions**

		Component	Description
(1)		Audio-out (headphone)/Audio-in (microphone) combo jack	Connects optional powered stereo speakers, headphones, earbuds, a headset, or a television audio cable. Also connects an optional headset microphone. This jack does not support optional standalone microphones. WARNING! To reduce the risk of personal injury, adjust the volume before putting on headphones, earbuds, or a headset. For additional safety information, see the *Regulatory, Safety, and Environmental Notices*. To access this guide: ■ Select the **Search** icon in the taskbar, type `HP Documentation` in the search box, and then select **HP Documentation**. NOTE: When a device is connected to the jack, the computer speakers are disabled.
(2)	SS	USB 10 Gbps ports (2)	Connect a USB device, provides high-speed data transfer, and (for select products) charges small devices (such as a smartphone) when the computer is on or in Sleep mode. NOTE: Use a standard USB Type-A charging cable or cable adapter (purchased separately) when charging a small external device.

Left side

Identify the components on the left side of the computer.

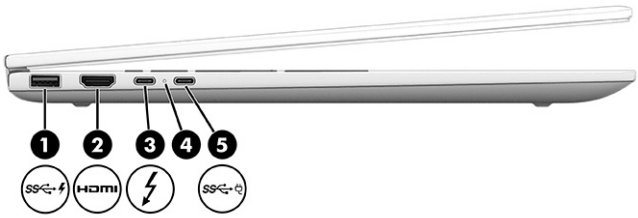

Table 2-2 Left-side components and their descriptions

		Component	Description
(1)	SS	USB 10 Gbps port with HP Sleep and Charge	Connects a USB device, provides high-speed data transfer, and charges small devices (such as a smartphone), even when the computer is off. NOTE: Use a standard USB Type-A charging cable or cable adapter (purchased separately) when charging a small external device.
(2)	HDMI	HDMI port	Connects an optional video or audio device, such as a high-definition television, any compatible digital or audio component, or a high-speed High-Definition Multimedia Interface (HDMI) device.
(3)		USB Type-C® power connector and 10 Gbps Thunderbolt™ port with HP Sleep and Charge and DisplayPort™ output	Connects an AC adapter that has a USB Type-C connector, supplying power to the computer and, if needed, charging the computer battery. – and – Connects a USB device, provides high-speed data transfer, and charges small devices (such as a smartphone), even when the computer is off. NOTE: Use a standard USB Type-C charging cable or cable adapter (purchased separately) when charging a small external device. – and – Connects a display device that has a USB Type-C connector, providing DisplayPort output.
(4)		AC adapter and battery light	• White: The AC adapter is connected and the battery is fully charged. • Blinking amber: The AC adapter is disconnected and the battery has reached a low battery level. • Amber: The AC adapter is connected and the battery is charging. • Off: The battery is not charging.

Table 2-2 **Left-side components and their descriptions (continued)**

	Component	Description
(5)	USB Type-C power connector and 10 Gbps port with HP Sleep and Charge and DisplayPort output	Connects an AC adapter that has a USB Type-C connector, supplying power to the computer and, if needed, charging the computer battery. – and – Connects a USB device, provides high-speed data transfer, and charges small devices (such as a smartphone), even when the computer is off. NOTE: Use a standard USB Type-C charging cable or cable adapter (purchased separately) when charging a small external device. – and – Connects a display device that has a USB Type-C connector, providing DisplayPort output.

Display

The computer display can include essential components such as speakers, antennas, cameras, and microphones.

Low blue light mode (select products only)

Your computer display is shipped from the factory in low blue light mode for improved eye comfort and safety. Also, blue light mode automatically adjusts blue light emissions when you are using the computer at night or for reading.

⚠ WARNING! To reduce the risk of serious injury, read the *Safety & Comfort Guide*. It describes proper workstation setup and proper posture, health, and work habits for computer users. The *Safety & Comfort Guide* also provides important electrical and mechanical safety information. The *Safety & Comfort Guide* is available on the web at http://www.hp.com/ergo.

IMAX Enhanced Mode (select products only)

Select computer models are configured with IMAX Enhanced Mode, a solution built into the hardware and software to enhance the IMAX audio and video experience.

To access the latest setup documentation, go to http://www.hp.com/support, type `IMAX` in the **Search our knowledge library** search box, and then select **HP Consumer Notebook PCs - Enabling the IMAX features**.

Wake-on-voice (select products only)

Use the wake-on-voice feature to bring the computer out of the Sleep state quickly.

To access the wake-on-voice settings, follow these steps:

1. Select the **Search** icon in the taskbar, type `XiaoWei` in the search box, and then select **XiaoWei**.
2. When the tool opens, scan the QR code with your mobile device, which takes you to the settings page, where you can select your wake-on-voice features.

3. Follow the on-screen instructions.

NOTE: Allow the XiaoWei app to continue running on the computer.

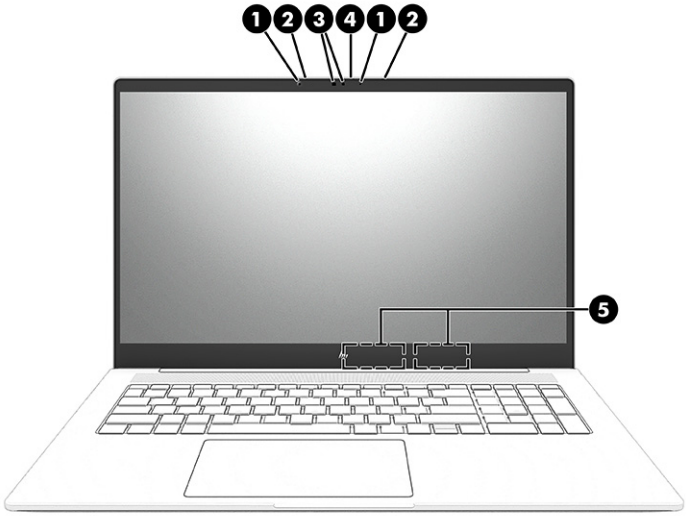

Table 2-3 Display components and their descriptions

	Component	Description
(1)	Camera lights (2)	On: One or more cameras are in use.
(2)	Internal microphones (2)	Record sound.
(3)	Cameras (2)	Allow you to video chat, record video, and record still images. Some cameras also allow a facial recognition logon to Windows, instead of a password logon. NOTE: Camera functions vary depending on the camera hardware and software installed on your product.
(4)	Camera privacy cover	By default, the camera lens is uncovered, but you can slide the camera privacy cover to block the camera's view. To use the camera, slide the camera privacy cover in the opposite direction to reveal the lens. NOTE: If you have both front-facing and rear-facing cameras, when one camera lens is revealed and ready to use, the other is concealed.
(5)	WLAN antennas (2)*	Send and receive wireless signals to communicate with wireless local area networks (WLANs).

*The antennas are not visible from the outside of the computer. For optimal transmission, keep the areas immediately around the antennas free from obstructions.

For wireless regulatory notices, see the section of the *Regulatory, Safety, and Environmental Notices* that applies to your country or region.

To access this guide:

- Select the **Search** icon in the taskbar, type `HP Documentation` in the search box, and then select **HP Documentation**.

Keyboard area

Keyboards can vary by language.

NOTE: The keyboard area, including the function keys and (select products only) power key, is disabled in stand, tent, and tablet modes. To enable the keyboard, including the power key, change to the clamshell mode.

Touchpad settings and components

Learn the touchpad settings and components.

Touchpad settings

Learn how to adjust touchpad settings.

Adjusting touchpad settings

Use these steps to adjust touchpad settings and gestures.

1. Select the **Search** icon in the taskbar, type `touchpad settings` in the search box, and then press enter.
2. Choose a setting.

Turning on the touchpad

Follow these steps to turn on the touchpad.

1. Select the **Search** icon in the taskbar, type `touchpad settings` in the search box, and then press enter.
2. Using an external mouse, click the **touchpad** button.

   If you are not using an external mouse, press the Tab key repeatedly until the pointer rests on the **touchpad** button. Then press the spacebar to select the button.

Touchpad components

Identify the touchpad components.

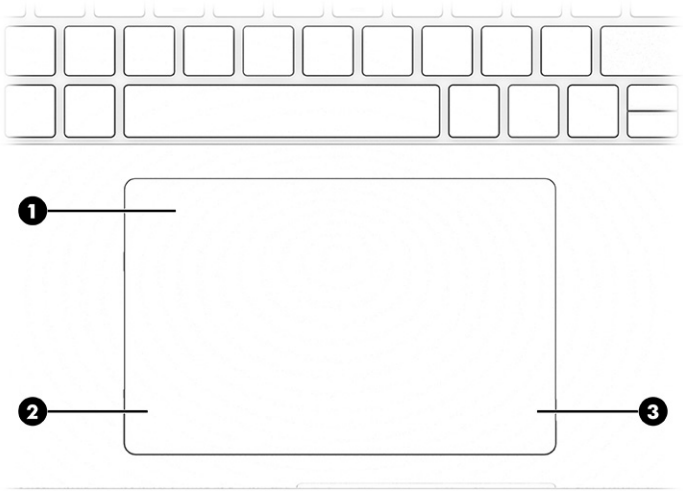

Table 2-4 Touchpad components and their descriptions

	Component	Description
(1)	Touchpad zone	Reads your finger gestures to move the pointer or activate items on the screen.
(2)	Left control zone	Textured area that allows you to perform additional gestures.
(3)	Right control zone	Textured area that allows you to perform additional gestures.

Lights

Identify the lights on the computer.

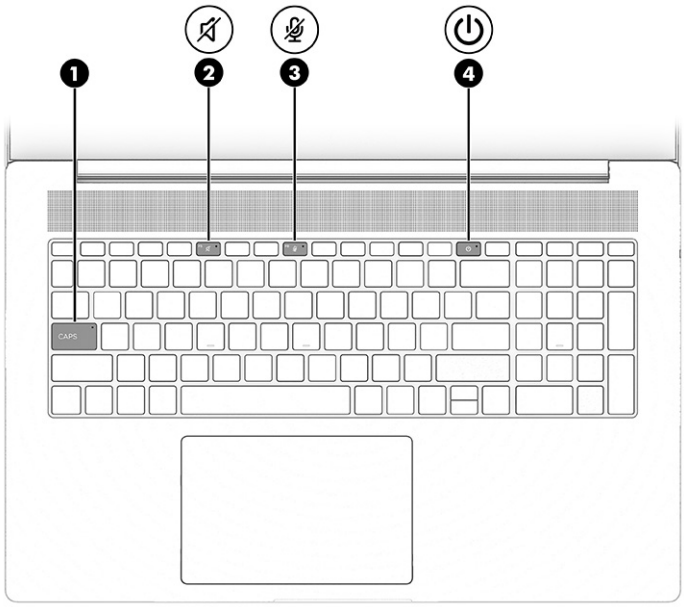

Table 2-5 Lights and their descriptions

		Component	Description
(1)		Caps lock light	On: Caps lock is on, which switches the key input to all capital letters.
(2)		Mute light	• On: Computer sound is off. • Off: Computer sound is on.
(3)		Microphone mute light	• On: Microphone is off. • Off: Microphone is on.
(4)		Power light	• On: The computer is on. • Blinking (select products only): The computer is in the Sleep state, a power-saving state. The computer shuts off power to the display and other unnecessary components. • Off: Depending on your computer model, the computer is off, in Hibernation, or in Sleep. Hibernation is the power-saving state that uses the least amount of power.

Special keys

Identify the special keys.

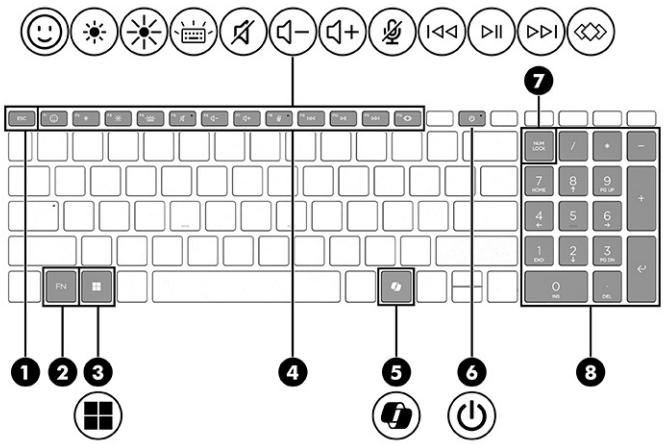

Table 2-6 Special keys and their descriptions

		Component	Description
(1)		esc key	Displays system information when pressed in combination with the fn key.
(2)		fn key	Executes specific functions when pressed in combination with another key.
(3)		Windows key	Opens the Start menu. NOTE: Pressing the Windows key again will close the Start menu.
(4)		Action keys	Execute frequently used system functions as defined by the icon symbols on f1 through f12 function keys.

Table 2-6 Special keys and their descriptions (continued)

		Component	Description
(5)		Windows Copilot® key	Opens Windows Copilot (select products only).
(6)		Power button	• When the computer is off, press the button briefly to turn on the computer. • When the computer is on, press the button briefly to initiate Sleep. • When the computer is in the Sleep state, press the button briefly to exit Sleep (select products only). • When the computer is in Hibernation, press the button briefly to exit Hibernation. IMPORTANT: Pressing and holding down the power button results in the loss of unsaved information. If the computer has stopped responding and shutdown procedures are ineffective, press and hold the power button down for at least 10 seconds to turn off the computer. To learn more about your power and sleep settings: ▪ Right-click the **Power** icon , and then select **Power and sleep settings**.
(7)		num lock key	Alternates between the navigational and numeric functions on the integrated numeric keypad.
(8)		Integrated numeric keypad	A separate keypad to the right of the alphabet keyboard. When num lock is pressed, the keypad can be used like an external numeric keypad. NOTE: If the keypad function is active when the computer is turned off, that function is reinstated when the computer is turned back on.

Bottom

Identify the bottom components.

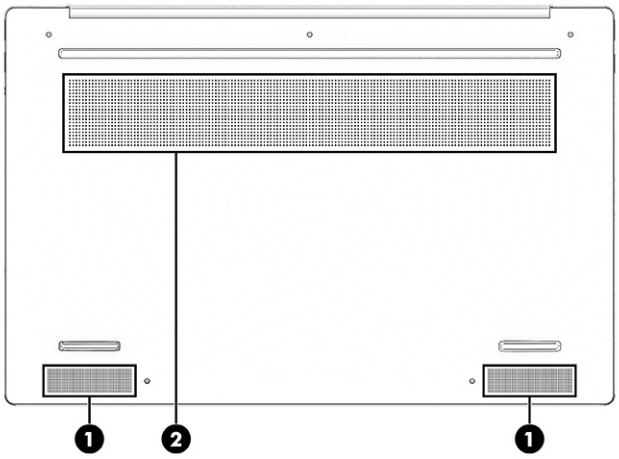

Table 2-7 Bottom components and their descriptions

	Component	Description
(1)	Speakers (2)	Produce sound.
(2)	Vent	Enables airflow to cool internal components. NOTE: The computer fan starts up automatically to cool internal components and prevent overheating. It is normal for the internal fan to cycle on and off during routine operation.

Labels

The labels affixed to the computer provide information that you might need when you troubleshoot system problems or travel internationally with the computer. Labels can be in paper form or imprinted on the product.

IMPORTANT: Check the following locations for the labels described in this section: the bottom of the computer, inside the battery bay, under the service door, on the back of the display, or on the bottom of a tablet kickstand.

- Service label—Provides important information to identify your computer. When contacting support, you might be asked for the serial number, the product number, or the model number. Locate this information before you contact support.

  Your service label will resemble one of the following examples. Refer to the illustration that most closely matches the service label on your computer.



Table 2-8 Service label components

	Component
(1)	Serial number
(2)	Product ID
(3)	HP product name and model number

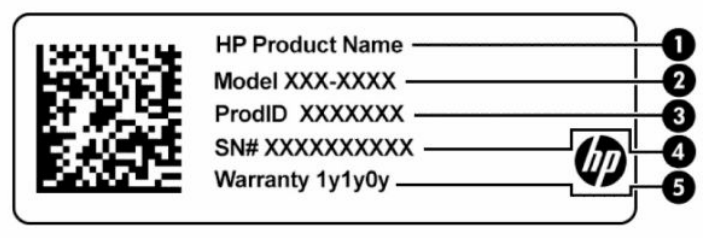

Table 2-9 Service label components

	Component
(1)	HP product name
(2)	Model number
(3)	Product ID
(4)	Serial number
(5)	Warranty period

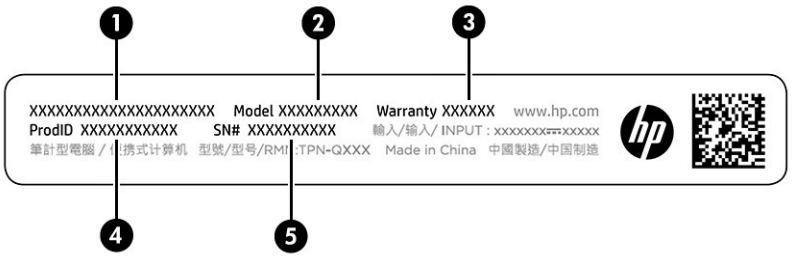

Table 2-10 Service label components

	Component
(1)	HP product name
(2)	Model number
(3)	Warranty period
(4)	Product ID
(5)	Serial number

- Regulatory labels—Provide regulatory information about the computer.

- Wireless certification labels—Provide information about optional wireless devices and the approval markings for the countries or regions in which the devices have been approved for use.

3 Illustrated parts catalog

Use this chapter to determine the spare parts that are available for the computer.

Computer major components

To identify the computer major components, use this illustration and table.

NOTE: HP continually improves and changes product parts. For complete and current information about supported parts for your computer, go to http://partsurfer.hp.com, select your country or region, and then follow the on-screen instructions.

NOTE: Details about your computer, including model, serial number, product key, and length of warranty, are on the service tag at the bottom of your computer.

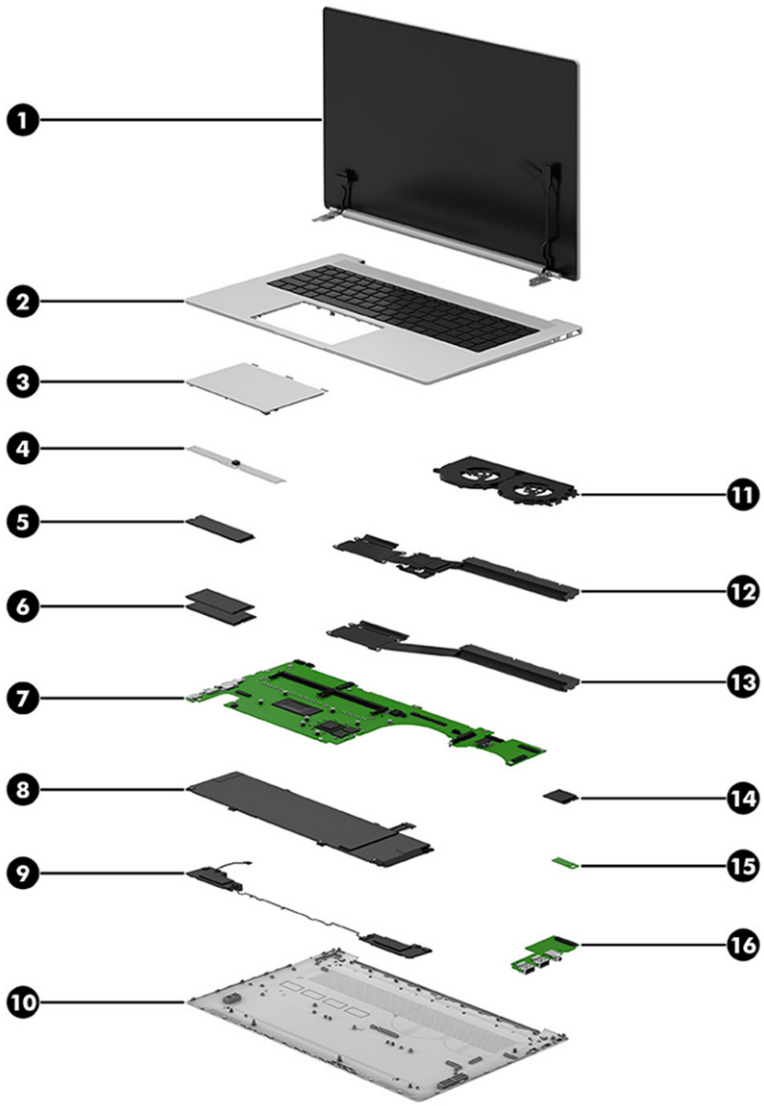

Table 3-1 Computer major component descriptions and part numbers

Item	Component	Spare part number
(1)	**Display assembly** NOTE: Display spare parts are available only as subcomponents. For spare part information, see Display assembly subcomponents on page 18.	
(2)	**Top cover with keyboard** NOTE: For a detailed list of country codes, see Top cover with keyboard on page 56.	N87243-xx1
(3)	**Touchpad** NOTE: The touchpad cable is available as spare part number N87222-001.	N87233-001
(4)	**Touchpad bracket**	not available as a spare part
(5)	**Solid-state drive** (M.2 2280) NOTE: The solid-state drive thermal pad is available as spare part number N91032-001.	
	2 TB, PCIe 4 × 4, TLC	M52027-005
	1 TB, PCIe 4 × 4	N45474-005
	512 GB, PCIe-4 × 4	N45476-005
(6)	**Memory module** (DDR5-5600) NOTE: Memory module thermal pads are available as spare part number P00827-001.	
	16 GB	N38627-005
	8 GB	N37792-005
(7)	**System board** NOTE: The system board connector protective tape kit is available as spare part number N91674-001.	
	Intel Core Ultra7 155U processor, discrete graphics memory	N87240-601
	Intel Core Ultra7 155U processor, UMA graphics memory	N87238-601
	Intel Core Ultra5 125U processor, UMA graphics memory	N87239-601
(8)	**Battery** (6 cell, 83 Whr)	N98708-001
(9)	**Speakers**	N87232-001
(10)	**Bottom cover**	N87218-001
(11)	**Fans**	
	Models with UMA graphics	N87224-001
	Models with discrete graphics	N87225-001
	Heat sink NOTE: The heat sink thermal pad is available using spare part number N87234-001.	
(12)	Models with discrete graphics	N87227-001
(13)	Models with UMA graphics	N87226-001
(14)	**WLAN module**	

Table 3-1 Computer major component descriptions and part numbers (continued)

Item	Component	Spare part number
	Intel Wi-Fi 7 BE200 + Bluetooth 5.4 WLAN, non-vPro	N39883-005
	Intel AX211 Wi-Fi 6E Bluetooth 5.3 WLAN	M53366-005
(15)	**IR board** NOTE: The IR board cable is available as spare part number N87220-001.	N87230-001
(16)	**USB/audio board** NOTE: The USB/audio board cable is available as spare part number N87219-001.	N87229-001

Display assembly subcomponents

To identify the display assembly subcomponents, use this illustration and table.

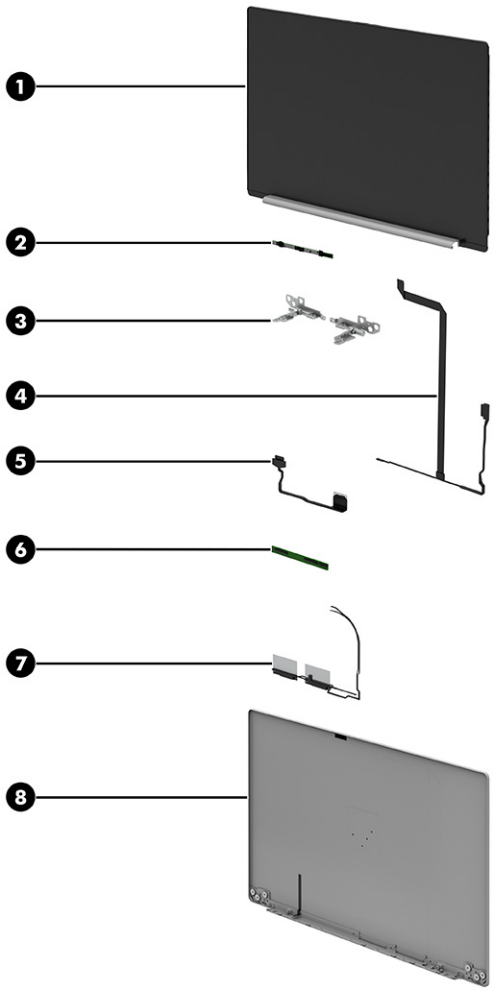

Table 3-2 Display component descriptions and part numbers

Item	Component	Spare part number
(1)	**Display panel** (touch screen) NOTE: Display panel adhesive is available as spare part number N87241-001.	N87242-001
(2)	**Camera module** (includes microphone rubber)	N87236-001
(3)	**Display hinges** (includes left and right hinges and display panel stretchable tape)	N87228-001
(4)	**Camera/touch control board cable**	N87223-001
(5)	**Display cable**	N87221-001
(6)	**Touch control board**	N87231-001
(7)	**Wireless antenna kit** (includes antenna cables and transceivers)	N87216-001
(8)	**Display back cover** (includes antennas and preinstalled display panel tape)	N87217-001
	Display panel adhesive strips (not illustrated)	N87241-001

Miscellaneous parts

To identify the miscellaneous parts, use this table.

Table 3-3 Miscellaneous part descriptions and part numbers

Component	Spare part number
65 W USB-C AC adapter (nPFC)	M54350-001
100 W USB-C AC adapter	N57045-001
USB External DVD±RW drive	747080-001
HP 430 Multidevice Wireless Mouse	M61225-001
HP Z3700 Dual Wireless Mouse, silver	N33387-001
Display panel adhesive kit (includes left and right adhesive strips)	N87241-001
Screw Kit	N87235-001
Misc Parts Kit (includes IR camera thermal pad and touch screen conductive EMC tape)	N92035-001
Duckhead power adapter (for use in Japan)	L33157-001
Power cord (C5, 1.0 m [3.3 ft], premium, straight)	
For use in Denmark	L22322-001
For use in Europe	L22321-001
For use in Israel	L22323-001
For use in Japan	L22330-001
For use in North America	L22319-001
For use in South Africa	L22325-001
For use in Switzerland	L22324-001
For use in the United Kingdom	L22320-001

4 Removal and replacement procedures preliminary requirements

Use this information to properly prepare to disassemble and reassemble the computer.

Tools required

You need the following tools to complete the removal and replacement procedures:

- Suction cup
- Tweezers
- Nonconductive, nonmarking pry tool
- Magnetic Phillips P1 screwdriver

Service considerations

The following sections include some of the considerations that you must keep in mind during disassembly and assembly procedures.

NOTE: As you remove each subassembly from the computer, place the subassembly (and all accompanying screws) away from the work area to prevent damage.

Plastic parts

Using excessive force during disassembly and reassembly can damage plastic parts.

Cables and connectors

Handle cables with extreme care to avoid damage.

IMPORTANT: When servicing the computer, be sure that cables are placed in their proper locations during the reassembly process. Improper cable placement can damage the computer.

Apply only the tension required to unseat or seat the cables during removal and insertion. Handle cables by the connector whenever possible. In all cases, avoid bending, twisting, or tearing cables. Be sure that cables are routed so that they cannot be caught or snagged as you remove or replace parts. Handle flex cables with extreme care; these cables tear easily.

Drive handling

Note the following guidelines when handling drives.

IMPORTANT: Drives are fragile components. Handle them with care. To prevent damage to the computer, damage to a drive, or loss of information, observe these precautions:

- Before removing or inserting a hard drive, shut down the computer. If you are unsure whether the computer is off or in Hibernation, turn the computer on, and then shut it down through the operating system.
- Before handling a drive, be sure that you are discharged of static electricity. While handling a drive, avoid touching the connector.
- Before removing an optical drive, be sure that a disc is not in the drive, and be sure that the optical drive tray is closed.
- Handle drives on surfaces covered with at least 2.54 cm (1 inch) of shock-proof foam.
- Avoid dropping drives from any height onto any surface.
- After removing a hard drive or an optical drive, place it in a static-proof bag.
- Avoid exposing an internal hard drive to products that have magnetic fields, such as monitors or speakers.
- Avoid exposing a drive to temperature extremes or liquids.
- If a drive must be mailed, place the drive in a bubble pack mailer or other suitable form of protective packaging, and label the package “FRAGILE.”

Electrostatic discharge information

A sudden discharge of static electricity from your finger or other conductor can destroy static-sensitive devices or microcircuitry. Often the spark is neither felt nor heard, but damage occurs. An electronic device exposed to electrostatic discharge (ESD) might not appear to be affected at all and can work perfectly throughout a normal cycle. The device might function normally for a while, but it has been degraded in the internal layers, reducing its life expectancy.

Networks built into many integrated circuits provide some protection, but in many cases, the discharge contains enough power to alter device parameters or melt silicon junctions.

IMPORTANT: To prevent damage to the device when you remove or install internal components, observe these precautions:

- Keep components in their electrostatic-safe containers until you are ready to install them.
- Before touching an electronic component, discharge static electricity by using the guidelines described in Personal grounding methods and equipment on page 22.
- Avoid touching pins, leads, and circuitry. Handle electronic components as little as possible.
- If you remove a component, place it in an electrostatic-safe container.

Generating static electricity

Follow these static electricity guidelines:

- Different activities generate different amounts of static electricity.
- Static electricity increases as humidity decreases.

Table 4-1 Static electricity occurrence based on activity and humidity

	Relative humidity		
Event	**55%**	**40%**	**10%**
Walking across carpet	7,500 V	15,000 V	35,000 V
Walking across vinyl floor	3,000 V	5,000 V	12,000 V
Motions of bench worker	400 V	800 V	6,000 V
Removing dual in-line packages (DIPs) from plastic tube	400 V	700 V	2,000 V
Removing DIPs from vinyl tray	2,000 V	4,000 V	11,500 V
Removing DIPs from polystyrene foam	3,500 V	5,000 V	14,500 V
Removing bubble pack from PCB (printed circuit board)	7,000 V	20,000 V	26,500 V
Packing PCBs in foam-lined box	5,000 V	11,000 V	21,000 V

NOTE: Multiple electric components can be packaged together in plastic tubes, trays, or polystyrene foam.

As little as 700 V of static electricity can degrade a product.

Preventing electrostatic damage to equipment

Many electronic components are sensitive to ESD. Circuitry design and structure determine the degree of sensitivity.

The following packaging and grounding precautions are necessary to prevent static electricity damage to electronic components:

- To avoid hand contact, transport products in static-safe containers such as tubes, bags, or boxes.
- Protect all electrostatic parts and assemblies with conductive or approved containers or packaging.
- Keep electrostatic-sensitive parts in their containers until they arrive at static-free stations.
- Place items on a grounded surface before removing them from their container.
- Always be properly grounded when touching a sensitive component or assembly.
- Avoid contact with pins, leads, or circuitry.
- Place reusable electrostatic-sensitive parts from assemblies in protective packaging or conductive foam.

Personal grounding methods and equipment

Using certain equipment can prevent static electricity damage to electronic components.

- **Wrist straps** are flexible straps with a maximum of 1 MΩ ±10% resistance in the ground cords. To provide proper ground, a strap must be worn snug against bare skin. The ground cord must be connected and fit snugly into the banana plug connector on the grounding mat or workstation.

- You can use **heel straps, toe straps, and boot straps** at standing workstations. These straps are compatible with most types of shoes or boots. On conductive floors or dissipative floor mats, use them on both feet with a maximum of 1 MΩ ±10% resistance between the operator and ground.

Table 4-2 **Static shielding protection levels**

Static shielding protection levels	
Method	**Voltage**
Antistatic plastic	1,500
Carbon-loaded plastic	7,500
Metallized laminate	15,000

Grounding the work area

To prevent static damage at the work area, follow these precautions:

- Cover the work surface with approved static-dissipative material.
- Use a wrist strap connected to a properly grounded work surface and use properly grounded tools and equipment.
- Use static-dissipative mats, foot straps, or air ionizers to give added protection.
- Handle electrostatic sensitive components, parts, and assemblies by the case or PCB laminate. Handle them only at static-free work areas.
- Turn off power and input signals before inserting and removing connectors or test equipment.
- Use fixtures made of static-safe materials when fixtures must directly contact dissipative surfaces.
- Keep the work area free of nonconductive materials, such as ordinary plastic assembly aids and polystyrene foam.
- Use conductive field service tools, such as cutters, screwdrivers, and vacuums.
- Avoid contact with pins, leads, or circuitry.

Recommended materials and equipment

HP recommends certain materials and equipment to prevent static electricity:

- Antistatic tape
- Antistatic smocks, aprons, or sleeve protectors
- Conductive bins and other assembly or soldering aids
- Conductive foam
- Conductive tabletop workstations with ground cord of 1 MΩ ±10% resistance
- Static-dissipative table or floor mats with hard tie to ground
- Field service kits
- Static awareness labels

- Wrist straps and footwear straps providing 1 MΩ ±10% resistance
- Material handling packages
- Conductive plastic bags
- Conductive plastic tubes
- Conductive tote boxes
- Opaque shielding bags
- Transparent metallized shielding bags
- Transparent shielding tubes

Cleaning your computer

Cleaning your computer regularly removes dirt and debris so that your device continues to operate at its best. Use the following information to safely clean the external surfaces of your computer.

Enabling HP Easy Clean (select products only)

HP Easy Clean helps you to avoid accidental input while you clean the computer surfaces. This software disables devices such as the keyboard, touch screen, and touchpad for a preset amount of time so that you can clean all computer surfaces.

1. Start HP Easy Clean in one of the following ways:
   - Select the **Start** menu, and then select **HP Easy Clean**.
   - Select the **HP Easy Clean** icon in the taskbar.
   - Select **Start**, and then select the **HP Easy Clean** tile.
2. Now that your device is disabled for a short period, see Removing dirt and debris from your computer on page 24 for the recommended steps to clean the high-touch, external surfaces on your computer. After you remove the dirt and debris, you can also clean the surfaces with a disinfectant. See Cleaning your computer with a disinfectant on page 25 for guidelines to help prevent the spread of harmful bacteria and viruses.

Removing dirt and debris from your computer

Here are the recommended steps to clean dirt and debris from your computer.

For computers with wood veneer, see Caring for wood veneer (select products only) on page 26.

1. Wear disposable gloves made of latex (or nitrile gloves, if you are latex-sensitive) when cleaning the surfaces.
2. Turn off your device and unplug the power cord and other connected external devices. Remove any installed batteries from items such as wireless keyboards.

⚠ CAUTION: To prevent electric shock or damage to components, never clean a product while it is turned on or plugged in.

3. Moisten a microfiber cloth with water. The cloth should be moist, but not dripping wet.

IMPORTANT: To avoid damaging the surface, avoid abrasive cloths, towels, and paper towels.

4. Wipe the exterior of the product gently with the moistened cloth.

IMPORTANT: Keep liquids away from the product. Avoid getting moisture in any openings. If liquid makes its way inside your HP product, it can cause damage to the product. Do not spray liquids directly on the product. Do not use aerosol sprays, solvents, abrasives, or cleaners containing hydrogen peroxide or bleach that might damage the finish.

5. Start with the display (if applicable). Wipe carefully in one direction, and move from the top of the display to the bottom. Finish with any flexible cables, like power cord, keyboard cable, and USB cables.

6. Be sure that surfaces have completely air-dried before turning the device on after cleaning.

7. Discard the gloves after each cleaning. Clean your hands immediately after you remove the gloves.

See Cleaning your computer with a disinfectant on page 25 for recommended steps to clean the high-touch, external surfaces on your computer to help prevent the spread of harmful bacteria and viruses.

Cleaning your computer with a disinfectant

The World Health Organization (WHO) recommends cleaning surfaces, followed by disinfection, as a best practice for preventing the spread of viral respiratory illnesses and harmful bacteria.

After cleaning the external surfaces of your computer using the steps in Removing dirt and debris from your computer on page 24, Caring for wood veneer (select products only) on page 26, or both, you might also choose to clean the surfaces with a disinfectant. A disinfectant that is within HP's cleaning guidelines is an alcohol solution consisting of 70% isopropyl alcohol and 30% water. This solution is also known as rubbing alcohol and is sold in most stores.

Follow these steps when disinfecting high-touch, external surfaces on your computer:

1. Wear disposable gloves made of latex (or nitrile gloves, if you are latex-sensitive) when cleaning the surfaces.

2. Turn off your device and unplug the power cord and other connected external devices. Remove any installed batteries from items such as wireless keyboards.

CAUTION: To prevent electric shock or damage to components, never clean a product while it is turned on or plugged in.

3. Moisten a microfiber cloth with a mixture of 70% isopropyl alcohol and 30% water. The cloth should be moist, but not dripping wet.

CAUTION: Do not use any of the following chemicals or any solutions that contain them, including spray-based surface cleaners: bleach, peroxides (including hydrogen peroxide), acetone, ammonia, ethyl alcohol, methylene chloride, or any petroleum-based materials, such as gasoline, paint thinner, benzene, or toluene.

IMPORTANT: To avoid damaging the surface, avoid abrasive cloths, towels, and paper towels.

4. Wipe the exterior of the product gently with the moistened cloth.

IMPORTANT: Keep liquids away from the product. Avoid getting moisture in any openings. If liquid makes its way inside your HP product, it can cause damage to the product. Do not spray liquids directly on the product. Do not use aerosol sprays, solvents, abrasives, or cleaners containing hydrogen peroxide or bleach that might damage the finish.

5. Start with the display (if applicable). Wipe carefully in one direction, and move from the top of the display to the bottom. Finish with any flexible cables, like power cord, keyboard cable, and USB cables.

6. Be sure that surfaces have completely air-dried before turning the device on after cleaning.

7. Discard the gloves after each cleaning. Clean your hands immediately after you remove the gloves.

Caring for wood veneer (select products only)

Your product might feature high-quality wood veneer. As with all natural wood products, proper care is important for best results over the life of the product. Because of the nature of natural wood, you might see unique variations in the grain pattern or subtle variations in color, which are normal.

- Clean the wood with a dry, static-free microfiber cloth or chamois.
- Avoid cleaning products containing substances such as ammonia, methylene chloride, acetone, turpentine, or other petroleum-based solvents.
- Do not expose the wood to sun or moisture for long periods of time.
- If the wood becomes wet, dry it by dabbing with an absorbent, lint-free cloth.
- Avoid contact with any substance that might dye or discolor the wood.
- Avoid contact with sharp objects or rough surfaces that might scratch the wood.

See Removing dirt and debris from your computer on page 24 for the recommended steps to clean the high-touch, external surfaces on your computer. After you remove the dirt and debris, you can also clean the surfaces with a disinfectant. See Cleaning your computer with a disinfectant on page 25 for sanitizing guidelines to help prevent the spread of harmful bacteria and viruses.

Packaging and transporting guidelines

Follow these grounding guidelines when packaging and transporting equipment:

- To avoid hand contact, transport products in static-safe tubes, bags, or boxes.
- Protect ESD-sensitive parts and assemblies with conductive or approved containers or packaging.
- Keep ESD-sensitive parts in their containers until the parts arrive at static-free workstations.
- Place items on a grounded surface before removing items from their containers.
- Always be properly grounded when touching a component or assembly.
- Store reusable ESD-sensitive parts from assemblies in protective packaging or nonconductive foam.

- Use transporters and conveyors made of antistatic belts and roller bushings. Be sure that mechanized equipment used for moving materials is wired to ground and that proper materials are selected to avoid static charging. When grounding is not possible, use an ionizer to dissipate electric charges.

Accessing support information

To find the HP support that you need, use this information.

Table 4-3 Support information locations

Service consideration	Path to access information
Records of reported failure incidents stored on the computer	**Windows®:** Preoperating system failures are logged in the BIOS Event Log. To view the BIOS Event Log: 1. Press the power button. 2. Immediately and repeatedly press esc when the power button light turns white. NOTE: If you do not press esc at the appropriate time, you must restart the computer and again repeatedly press esc when the power button light turns white to access the utility. 3. Press f10 to enter the BIOS setup. 4. (On commercial products) Under the **Main** tab, select **BIOS event log**, and then select **View BIOS Event Log**. - or - (On consumer products) Under the **Main** tab, select **System Log**. Post-operating system failures are logged in the Event Viewer. 1. Turn on the computer and allow the operating system to open. 2. Select the search icon in the taskbar. 3. Type `Event Viewer`, and then press enter. 4. Select the log from the left panel. Details display in the right panel. **Chrome™:** 1. Go to support.google.com/chrome. 2. Search `collect Chrome device logs`.
Technical bulletins	To locate technical bulletins: 1. Go to www.hp.com. 2. Place the cursor over **Problem solving** to display more options. 3. Select **Support & Troubleshooting**. 4. Type the serial number, product number, or product name to go to the product support page. 5. Select **Advisories** to view technical bulletins.

Table 4-3 Support information locations (continued)

Service consideration	Path to access information
Repair professionals	To locate repair professionals: 1. Go to www.hp.com. 2. Place the cursor over **Support resources** to display more options. 3. Select **Authorized service providers**.
Component and diagnosis information, failure detection, and required action	To locate diagnosis information and actions: 1. Go to http://www.hp.com/go/techcenter/pcdiags. 2. Select **Get Support**. 3. Near the bottom of the window, select **Notebook PCs**, and then select your location.

5 Removal and replacement procedures for authorized service provider parts

This chapter provides removal and replacement procedures for authorized service provider parts.

IMPORTANT: Only an authorized service provider should access the components described in this chapter. Accessing these parts can damage the computer or void the warranty.

NOTE: Details about your computer, including model, serial number, product key, and length of warranty, are on the service tag at the bottom of your computer.

Component replacement procedures

To remove and replace computer components, use the procedures described in this section.

NOTE: HP continually improves and changes product parts. For complete and current information about supported parts for your computer, go to https://partsurfer.hp.com/partsurfer/, select your country or region, and then follow the on-screen instructions.

Make special note of each screw size and location during removal and replacement.

Preparation for disassembly

To remove and replace computer components, use these procedures:

For initial safety procedures, see Removal and replacement procedures preliminary requirements on page 20.

1. Turn off the computer. If you are unsure whether the computer is off or in Hibernation, turn the computer on, and then shut it down through the operating system.
2. Disconnect the power from the computer by unplugging the power cord from the computer.
3. Disconnect all external devices from the computer.

Bottom cover

To remove the bottom cover, use this procedure and illustration.

Table 5-1 Bottom cover description and part number

Description	Spare part number
Bottom cover	N87218-001

Before removing the bottom cover, prepare the computer for disassembly (see Preparation for disassembly on page 29).

Remove the bottom cover:

1. Remove the three Phillips M2.5 × 9.0 screws **(1)** and the two Phillips M2.0 × 5.0 screws **(2)** that secure the bottom cover to the computer.

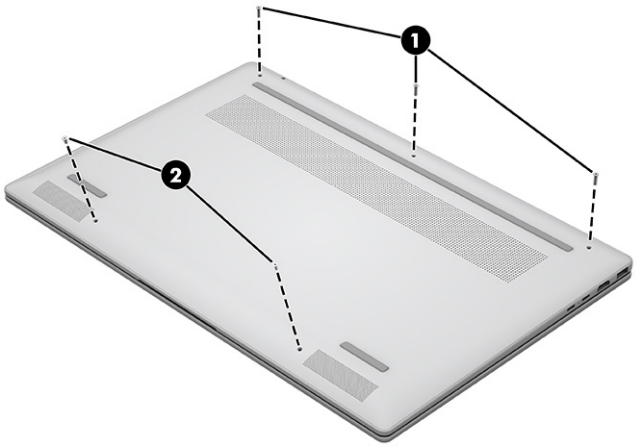

2. Lift up the top edge of the bottom cover **(1)** between the hinges to release it.
3. Remove the bottom cover **(2)**.

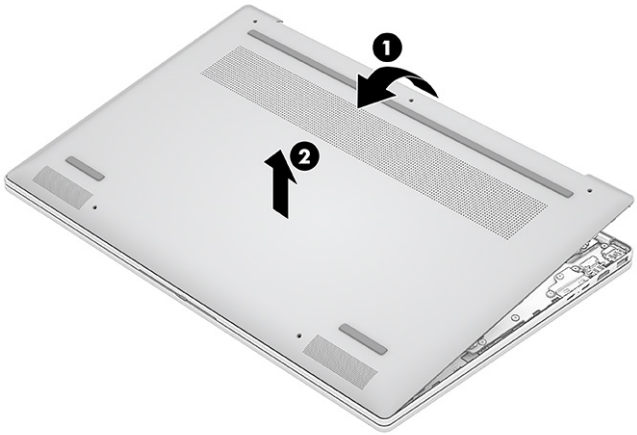

If the bottom cover is difficult to remove, open the computer and press on the top cover on both sides of the touchpad **(1)** to help release the bottom cover **(2)**.

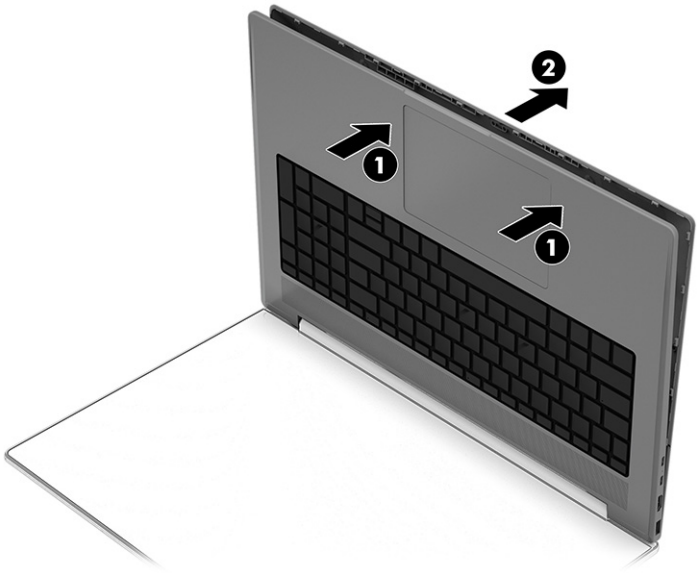

To replace the bottom cover, reverse the removal procedures.

Battery

To remove the battery, use this procedure and illustration.

Table 5-2 **Battery description and part number**

Description	Spare part number
Battery (6 cell, 83 Whr)	N98708-001

⚠ **WARNING!** To avoid personal injury and damage to the product:

- Do *not* puncture, twist, or crack the battery.
- Do *not* cause an external puncture or rupture to the battery. Punctures and ruptures can cause a short inside the battery, which can result in battery thermal runaway.
- Do *not* handle or touch the battery enclosure with sharp objects such as tweezers or pliers, which might puncture the battery.
- Do *not* compress or squeeze the battery case with tools or heavy objects stacked on top of the case. These actions can apply undue force on the battery.
- Do *not* touch the connectors with any metallic surface or object, such as metal tools, screws, or coins, which can cause shorting across the connectors.

Before removing the battery, follow these steps:

1. Prepare the computer for disassembly (see Preparation for disassembly on page 29).
2. Remove the bottom cover (see Bottom cover on page 29).

⚠ **WARNING!** To reduce potential safety issues, use only the user-replaceable battery provided with the computer, a replacement battery provided by HP, or a compatible battery purchased from HP.

IMPORTANT: Removing a battery that is the sole power source for the computer can cause loss of information. To prevent loss of information, save your work or shut down the computer through Windows before you remove the battery.

Remove the battery:

1. Disconnect the battery cable **(1)** from the system board.
2. Remove the seven Phillips M2.0 × 4.5 screws **(2)** that secure the battery to the computer.
3. Remove the battery **(3)**.

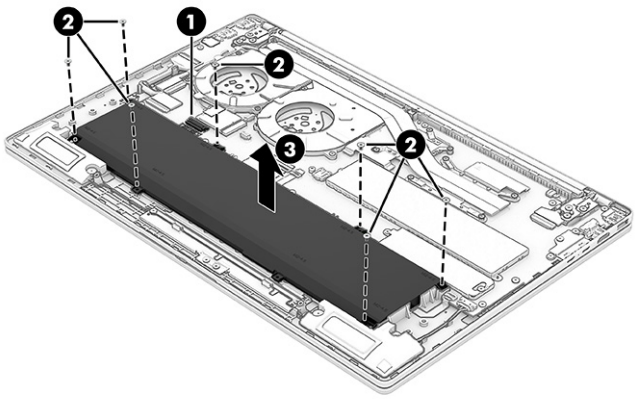

4. When installing a new battery, be sure to install the foam pad in the location shown in the following illustration, aligned with the bottom of the battery, 60 mm from the left side.



To install the battery, reverse the removal procedures.

NOTE: When replacing the battery, be sure to completely reassemble the computer and plug in the AC adapter before turning the computer on.

Solid-state drive

To remove the solid-state drive, use this procedure and illustration.

Table 5-3 Solid-state drive descriptions and part numbers

Description	Spare part number
2 TB, PCIe 4 × 4, TLC	M52027-005
1 TB, PCIe 4 × 4	N45474-005

Table 5-3 Solid-state drive descriptions and part numbers (continued)

Description	Spare part number
512 GB, PCIe-4 × 4	N45476-005
Solid-state drive thermal pad	N91032-001

Before removing the solid-state drive, follow these steps:

1. Prepare the computer for disassembly (see Preparation for disassembly on page 29).
2. Remove the bottom cover (see Bottom cover on page 29).
3. Disconnect the battery cable from the system board (see Battery on page 31).

Remove the solid-state drive:

1. Remove the two Phillips M2.0 × 3.0 screws **(1)** that secure the drive and bracket, and then remove the bracket **(2)**.
2. Pull the drive **(3)** away out of the socket to remove it.

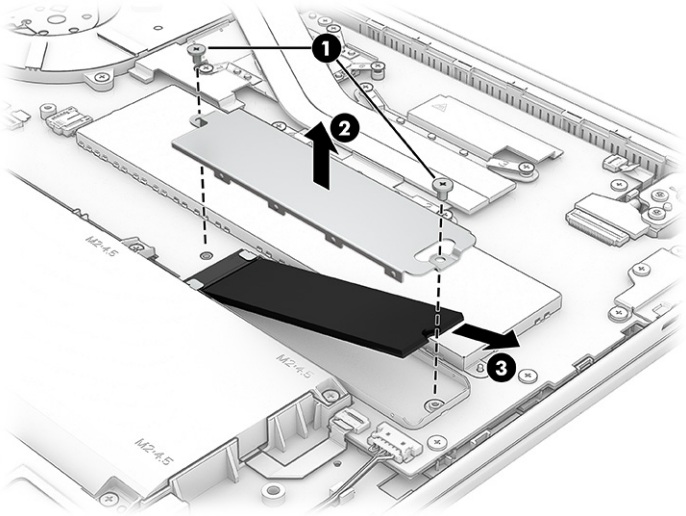

To install the solid-state drive, reverse the removal procedures.

When installing a solid-state drive, be sure the thermal pad is installed inside of the top bracket

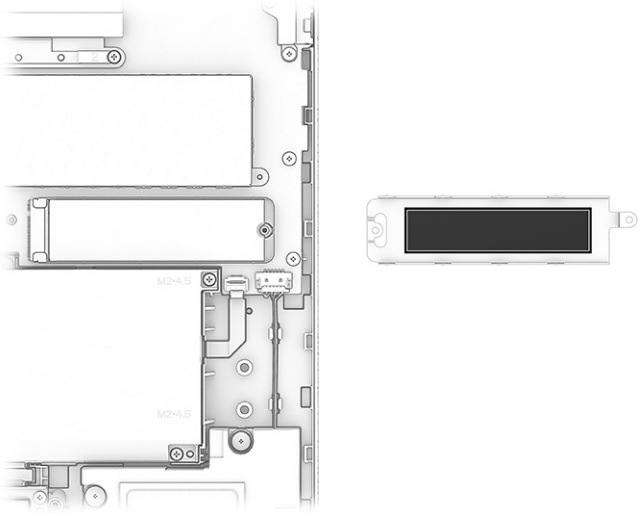

NOTE: Solid-state drives are designed with a notch to prevent incorrect insertion.

Memory modules

To remove the memory modules, use this procedure and illustration.

Table 5-4 Memory module descriptions and part numbers

Description	Spare part number
Memory module, 16 GB (DDR5-5600)	N38627-005
Memory module, 8 GB (DDR5-5600)	N37792-005
Memory module thermal pads	P00827-001

Before removing the memory, follow these steps:

1. Prepare the computer for disassembly (see Preparation for disassembly on page 29).
2. Remove the bottom cover (see Bottom cover on page 29).
3. Disconnect the battery cable from the system board (see Battery on page 31).

If you are replacing a memory module, remove the existing memory module:

1. Use a tool to release the cover from the system board. The cover is held in place by clips.

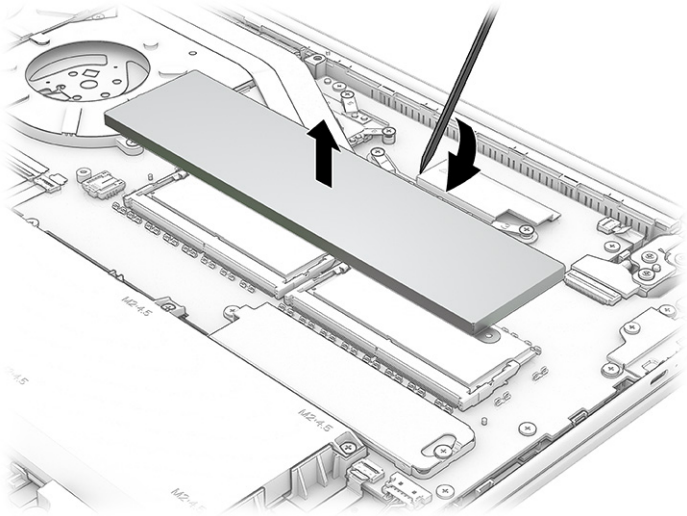

2. Spread the two retention clips outward **(1)** until the memory module tilts up at a 45° angle, and then remove the module **(2)**. Use the same procedure to remove all memory modules.

IMPORTANT: To prevent damage to the memory module, hold the memory module by the edges only. Do not touch the components on the memory module.

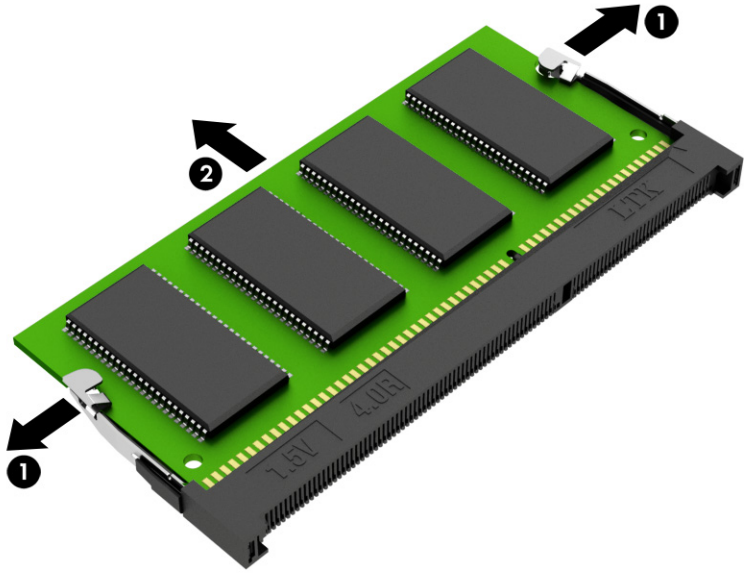

To protect a memory module after removal, place it in an electrostatic-safe container.

To install a memory module:

1. Be sure that thermal pads are installed on the system board underneath the memory modules.

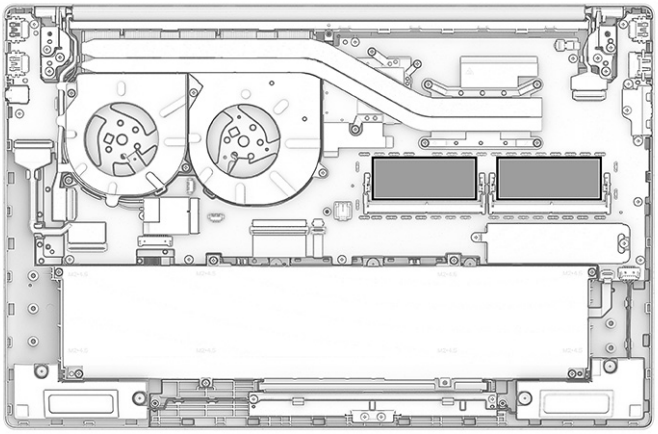

2. Align the notched edge of the module with the tab in the slot **(1)**, and then press the module into the slot at an angle until it is seated **(2)**.
3. Press down on the module until the side retention clips snap into place **(3)**.

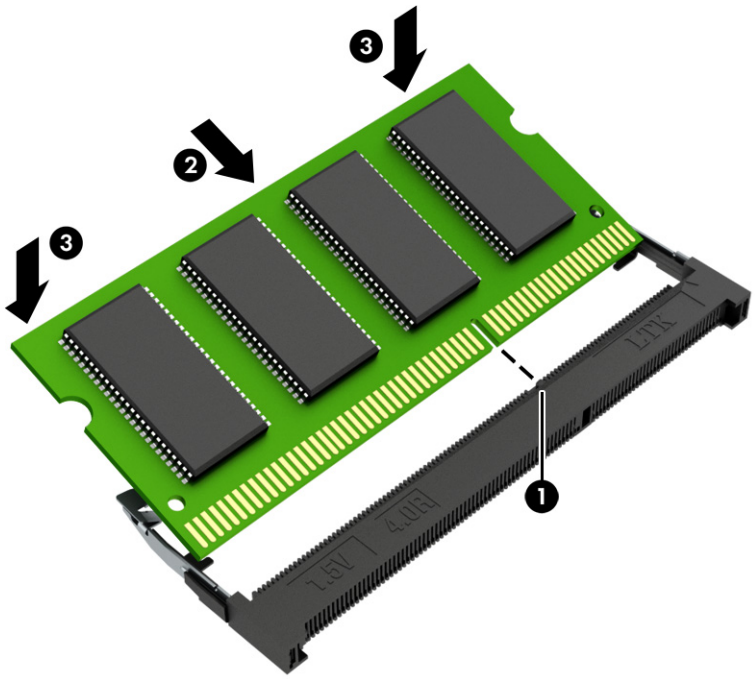

WLAN module

To remove the WLAN module, use this procedure and illustration.

Table 5-5 WLAN module descriptions and part numbers

Description	Spare part number
Intel Wi-Fi 7 BE200 + Bluetooth 5.4 WLAN, non-vPro	N39883-005

Table 5-5 WLAN module descriptions and part numbers (continued)

Description	Spare part number
Intel AX211 Wi-Fi 6E Bluetooth 5.3 WLAN	M53366-005
WLAN antenna plastic protector	N10779-001

IMPORTANT: To prevent an unresponsive system, replace the wireless module only with a wireless module authorized for use in the computer by the governmental agency that regulates wireless devices in your country or region. If you replace the module and then receive a warning message, remove the module to restore device functionality, and then contact technical support.

Before removing the WLAN module, follow these steps:

1. Prepare the computer for disassembly (see Preparation for disassembly on page 29).
2. Remove the bottom cover (see Bottom cover on page 29).
3. Disconnect the battery cable from the system board (see Battery on page 31).

Remove the WLAN module:

1. Remove the plastic piece **(1)** that protects the antenna connectors.
2. Carefully disconnect the two antenna cables **(2)** from the module.
3. Remove the Phillips M2.0 × 3.0 screw **(3)**, and then pull the module out of the socket **(4)**.

NOTE: The #1 white WLAN antenna cable connects to the WLAN module #1 Main terminal. The #2 black WLAN antenna cable connects to the WLAN module #1 Aux terminal.

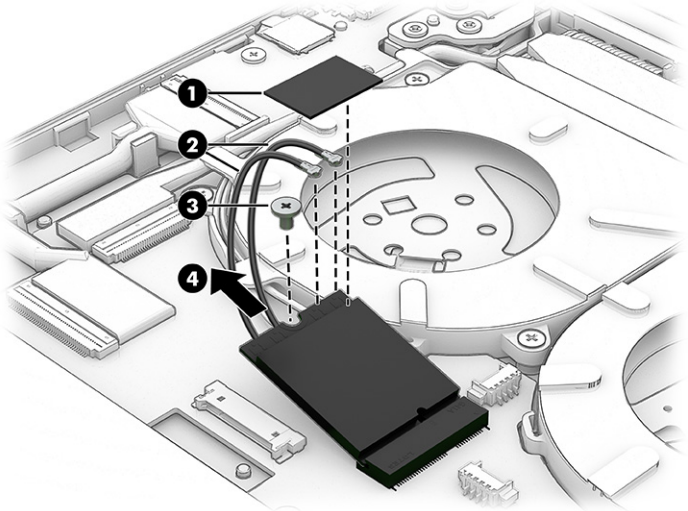

4. If the WLAN antenna is not connected to the terminal on the WLAN module, install a protective sleeve on the antenna connector, as shown in the following illustration.

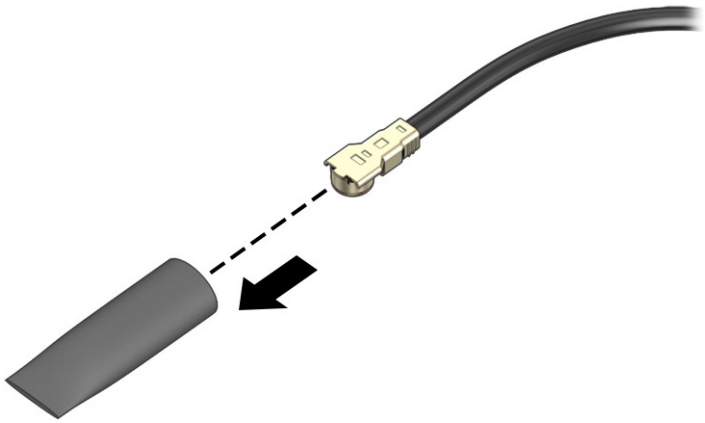

To install the WLAN module, reverse this procedure.

Fans

To remove the fans, use this procedure and illustration.

Table 5-6 Fan descriptions and part numbers

Description	Spare part number
Fan for use in models with UMA graphics	N87224-001
Fans for use in models with discrete graphics	N87225-001

Before removing the fans, follow these steps:

1. Prepare the computer for disassembly (see Preparation for disassembly on page 29).
2. Remove the bottom cover (see Bottom cover on page 29).
3. Disconnect the battery cable from the system board (see Battery on page 31).

Remove the fans:

1. Disconnect the fan cables **(1)** from the system board.
2. Remove the five Phillips M2.0 × 3.0 screws **(2)** that secure the fans to the computer.

3. Remove the fans **(3)** from the computer.

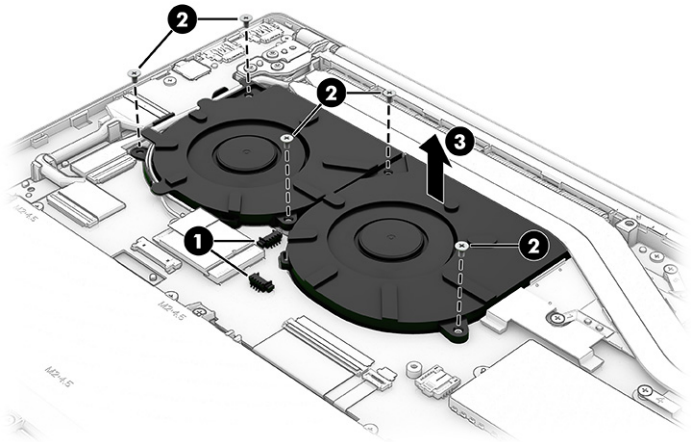

To install the fans, reverse this procedure.

Speakers

To remove the speakers, use this procedure and illustration.

Table 5-7 Speaker description and part number

Description	Spare part number
Speaker Kit	N87232-001

Before removing the speakers, follow these steps:

1. Prepare the computer for disassembly (see Preparation for disassembly on page 29).
2. Remove the bottom cover (see Bottom cover on page 29).
3. Disconnect the battery cable from the system board (see Battery on page 31).

Remove the speakers:

1. Disconnect the speaker cables **(1)** from the system board.
2. Remove the two Phillips M2.0 × 2.0 screws **(2)** that secure each speaker to the computer.
3. Lift the speakers **(3)** out of the computer.

NOTE: When removing the speakers, make note of the location of the four rubber isolators in the screw holes. The absence of or damage to these isolators can result in degraded speaker performance.

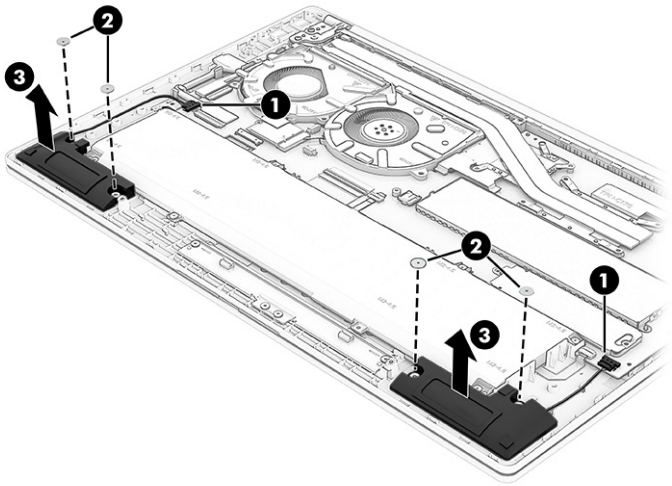

To install the speakers, reverse this procedure.

Touchpad

To remove the touchpad, use this procedure and illustration.

Table 5-8 Touchpad description and part number

Description	Spare part number
Touchpad	N87233-001
Touchpad cable	N87222-001

Before removing the touchpad, follow these steps:

1. Prepare the computer for disassembly (see Preparation for disassembly on page 29).
2. Remove the bottom cover (see Bottom cover on page 29).
3. Remove the battery (see Battery on page 31).

Remove the touchpad:

1. Remove the four Phillips M2.0 × 2.5 screws **(1)** that secure the touchpad bracket to the computer, and then remove the bracket **(2)**.

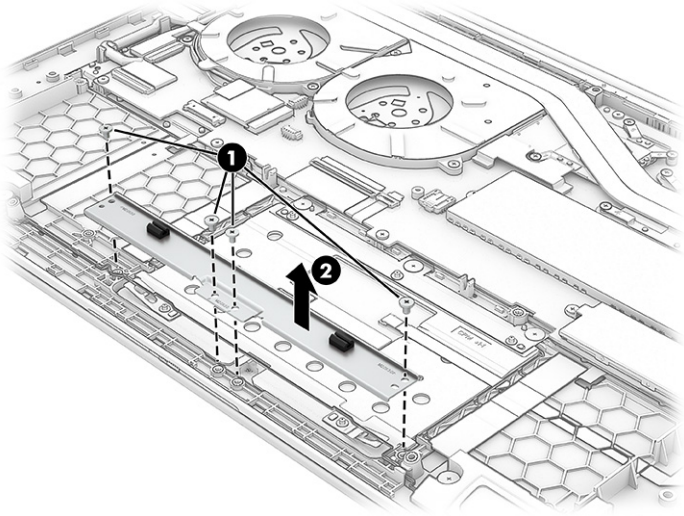

2. Remove the tape **(1)** from the connector on the touchpad.
3. Disconnect the cable from the touchpad ZIF connector **(2)**.
4. Peel the thin conductive tape **(3)** off the touchpad.
5. Remove the three broadhead Phillips M2.0 × 2.0 screws **(4)** that secure the touchpad to the computer.
6. Lift the bottom of the touchpad **(5)** upward, and then pull the touchpad **(6)** away from the system board and out of the computer.

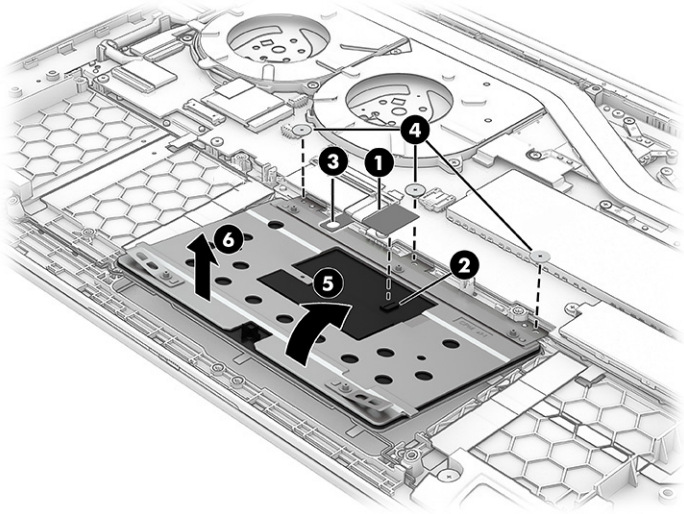

To install the touchpad, reverse this procedure.

USB/audio board

To remove the USB/audio board, use this procedure and illustration.

Table 5-9 USB/audio board description and part number

Description	Spare part number
USB/audio board	N87229-001
USB/audio board cable	N87219-001

Before removing the USB/audio board, follow these steps:

1. Prepare the computer for disassembly (see Preparation for disassembly on page 29).
2. Remove the bottom cover (see Bottom cover on page 29).
3. Disconnect the battery cable from the system board (see Battery on page 31).

Remove the USB/audio board:

1. Remove the protective tape **(1)** from the connector on the USB/audio board.
2. Disconnect the cable from the ZIF connector **(2)** on the board.
3. Remove the two Phillips M2.0 × 3.0 screws **(3)** from the board.
4. Remove the board **(4)** from the computer.

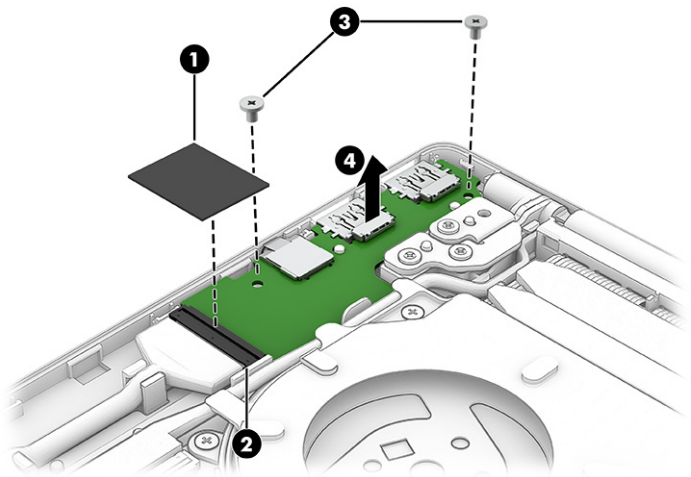

To install the USB/audio board, reverse this procedure.

Heat sink

To remove the heat sink, use this procedure and illustration.

Table 5-10 Heat sink description and part number

Description	Spare part number
Heat sink for use in models with UMA graphics	N87226-001
Heat sink for use in models with discrete graphics	N87227-001
Heat sink thermal pad	N87234-001

NOTE: You do not have to remove the heat sink before you remove the system board.

Before removing the heat sink, follow these steps:

1. Prepare the computer for disassembly (see Preparation for disassembly on page 29).
2. Remove the bottom cover (see Bottom cover on page 29).
3. Remove the battery (see Battery on page 31).

Remove the heat sink:

1. **UMA models**: In the order indicated on the heat sink, remove the four Phillips M2.0 × 3.0 screws **(1)** that secure the heat sink to the computer, and then remove the heat sink **(2)**.

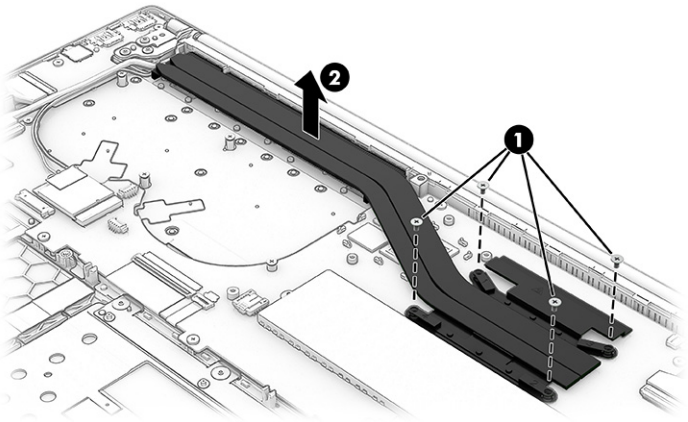

2. **Discrete models**: In the order indicated on the heat sink, remove the seven Phillips M2.0 × 3.0 screws **(1)** that secure the heat sink to the computer, and then remove the heat sink **(2)**.

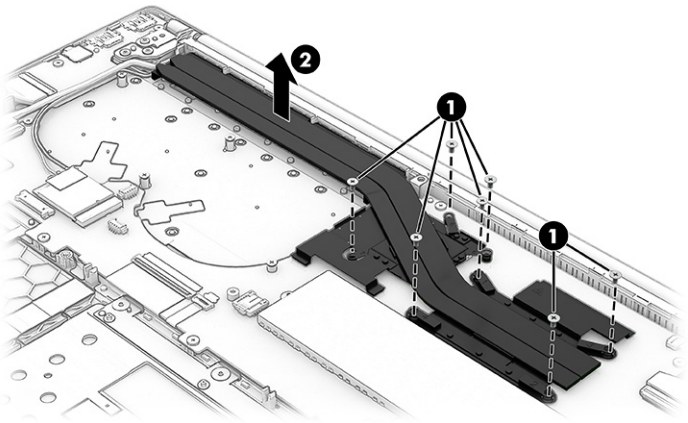

3. Thoroughly clean the thermal material from the surfaces of the heat sink and the system board components each time the heat sink is removed. Replacement thermal material is included with the heat sink spare part kit and is also available using spare part number N87234-001. The following illustration shows the replacement thermal material location.

   Thermal paste **(1)** and thermal pads **(2)** are used on the heat sink as shown in the following illustrations.

Models with UMA graphics

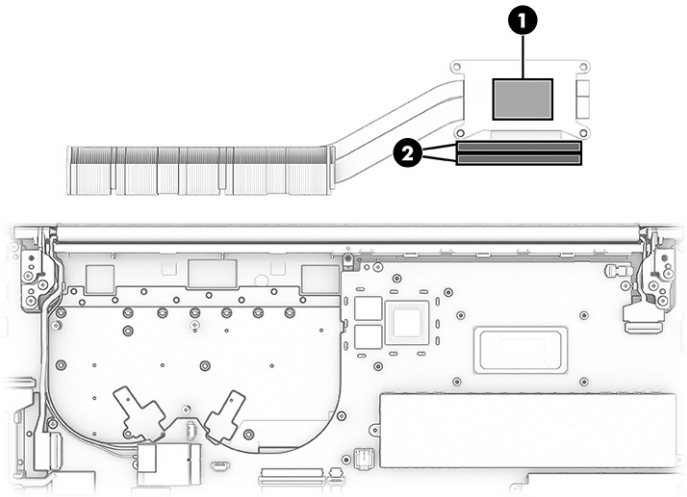

Models with discrete graphics

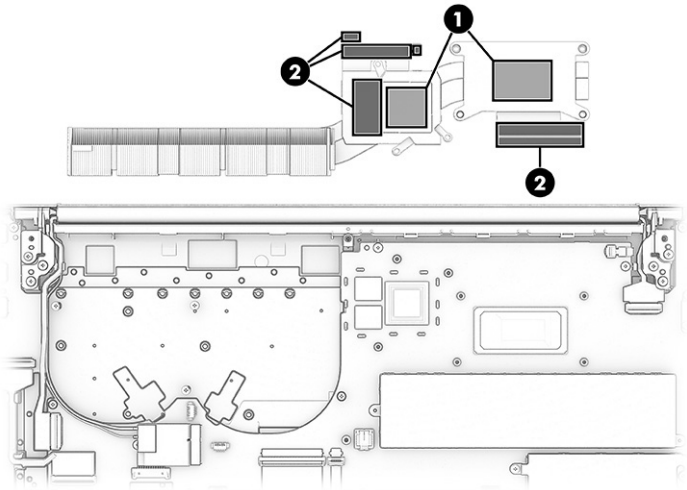

To install the heat sink, reverse this procedure.

System board

To remove the system board, use these procedures and illustrations.

Table 5-11 **System board descriptions and part numbers**

Description	Spare part number
Intel Core Ultra7 155U processor, discrete graphics memory	N87240-601
Intel Core Ultra7 155U processor, UMA graphics memory	N87238-601
Intel Core Ultra5 125U processor, UMA graphics memory	N87239-601
System board connector protective tape kit	N91674-001

Before removing the system board, follow these steps:

1. Prepare the computer for disassembly (see Preparation for disassembly on page 29).
2. Remove the bottom cover (see Bottom cover on page 29).
3. Remove the battery (see Battery on page 31).
4. Remove the solid-state drive (see Solid-state drive on page 32).
5. Remove the memory modules (see Memory modules on page 34).
6. Remove the WLAN module (see WLAN module on page 36).

NOTE: You do not have to remove the heat sink before you remove the system board.

Remove the system board:

1. Disconnect the following cables from the system board:
   - IR board cable (ZIF) **(1)**
   - Display cable (ZIF) **(2)**
   - Speaker cable **(3)**
   - Touchpad cable (ZIF) **(4)**
   - Backlight cable (ZIF) **(5)**
   - Keyboard cable (ZIF) **(6)**
   - Antenna cables from the WLAN module **(7)**
   - USB/audio board cable **(8)**
   - Speaker cable **(9)**
   - Camera cable (ZIF) **(10)**

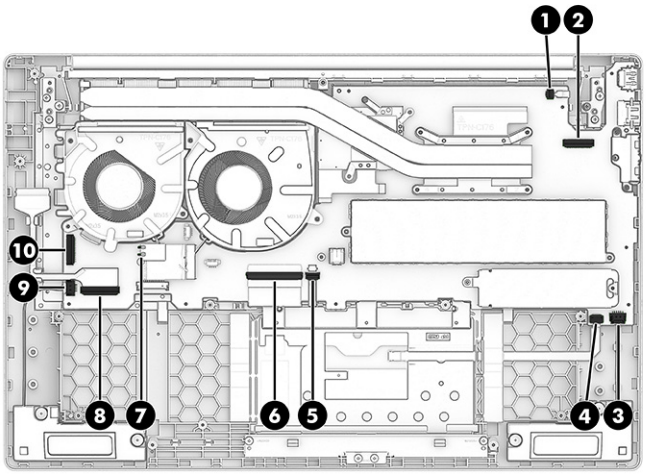

2. Remove the 10 Phillips M2.0 × 3.0 screws that secure the system board to the computer.

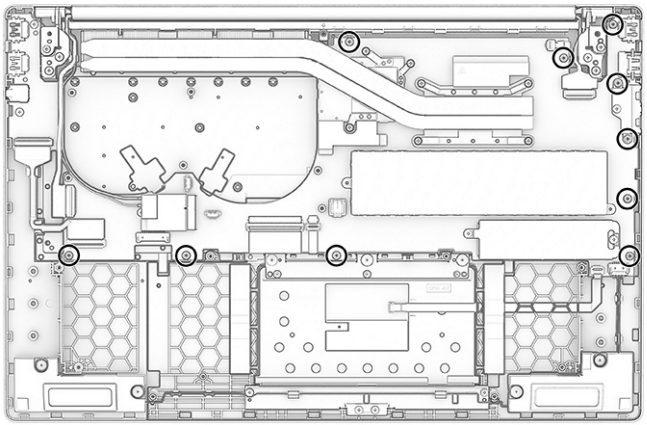

3. Lift the left side of the system board up, and then remove the board from the computer.

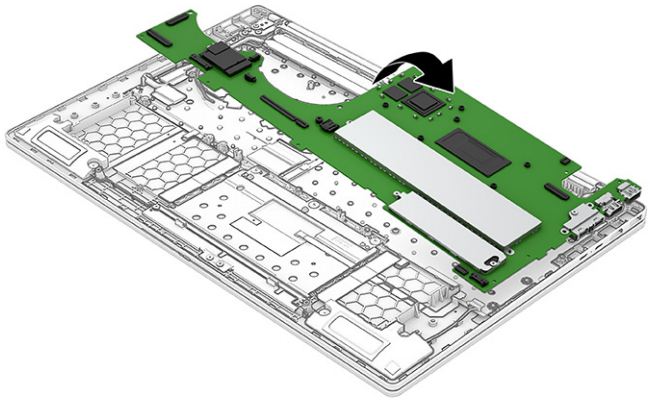

4. When replacing the system board, be sure to remove the USB bracket from the old system board and install it onto the new system board. To remove the system board bracket, remove the Phillips M2.0 × 3.0 screw **(1)**, and then slide the bracket **(2)** off the system board.

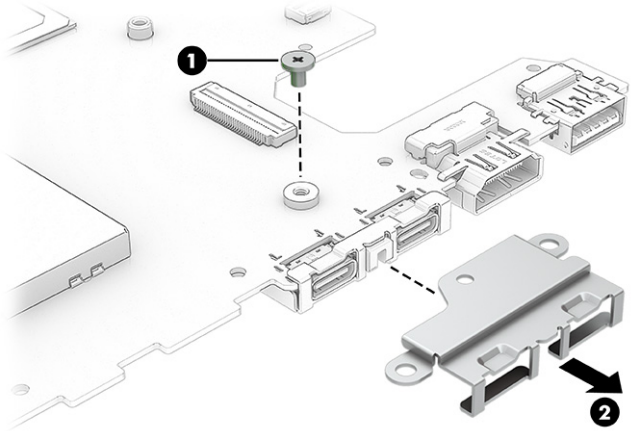

To install the system board, reverse this procedure.

IR board

To remove the IR board, use this procedure and illustration.

Table 5-12 **IR board description and part number**

Description	Spare part number
IR board	N87230-001
IR board cable	N87220-001

Before removing the IR board, follow these steps:

1. Prepare the computer for disassembly (see Preparation for disassembly on page 29).
2. Remove the bottom cover (see Bottom cover on page 29).
3. Remove the battery (see Battery on page 31).
4. Remove the system board (see System board on page 44).

Remove the IR board:

1. Remove the Phillips M2.0 × 3.0 screw **(1)** from the board .
2. Remove the board **(2)** from the computer.
3. Turn the board upside down, and then disconnect the cable from the ZIF connector **(3)** on the board. The cable connector is covered with protective tape. The cable is secured with double-sided tape.

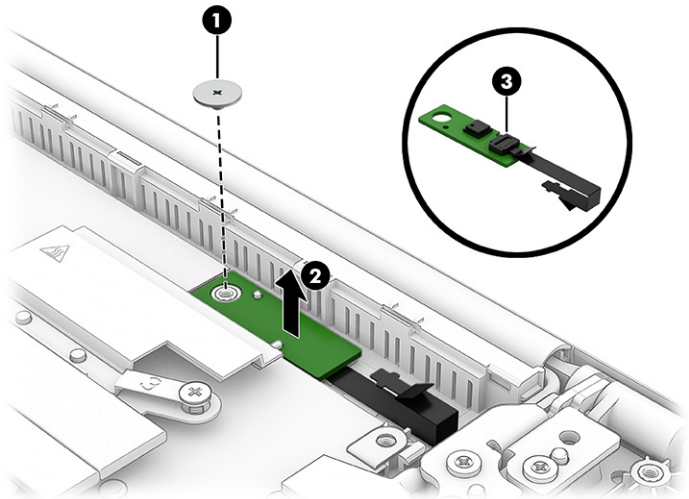

To install the IR board, reverse this procedure.

Display assembly

To remove and disassemble the display assembly, use these procedures and illustrations.

Full hinge-up displays are not available as spare parts. Spare parts for displays are available only at the subcomponent level.

Before removing the display panel, follow these steps:

1. Prepare the computer for disassembly (see Preparation for disassembly on page 29).
2. Remove the bottom cover (see Bottom cover on page 29).
3. Disconnect the battery cable from the system board (see Battery on page 31).

Remove the display assembly:

1. Remove the plastic piece **(1)** that covers the antenna connectors on the WLAN module.
2. Disconnect the antenna cables **(2)** from the WLAN module.
3. Disconnect the camera cable from the ZIF connector **(3)** on the system board.
4. Remove the antenna cables and camera cable from the routing clips **(4)** next to the fan.
5. Lift the protective tape **(5)** that covers the display connector on the system board. You do not need to completely remove the tape.
6. Disconnect the display cable from the ZIF connector **(6)** on the system board.

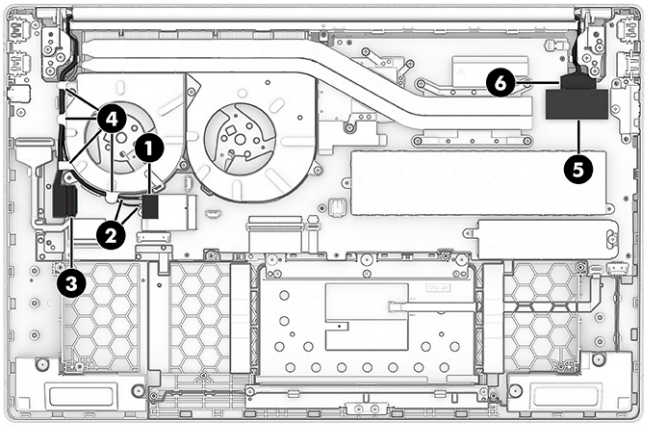

7. Open the display **(1)** to 90° to open the hinges.
8. Remove the six Phillips M2.5 × 5.0 screws **(2)** that secure the display assembly to the computer.

9. Separate the display **(3)** from the computer.

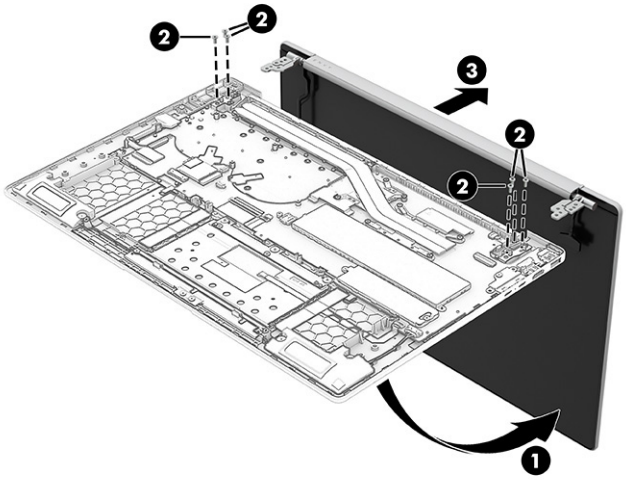

10. To remove the display panel:

    a. Place suction cups **(1)** on the front and back of the middle of the display.

    b. While pulling the suction cups away from each other **(2)**, insert a tool **(3)** into the top of the display to release the panel.

    NOTE: To prevent damage, be sure to avoid the camera module when releasing the display panel.

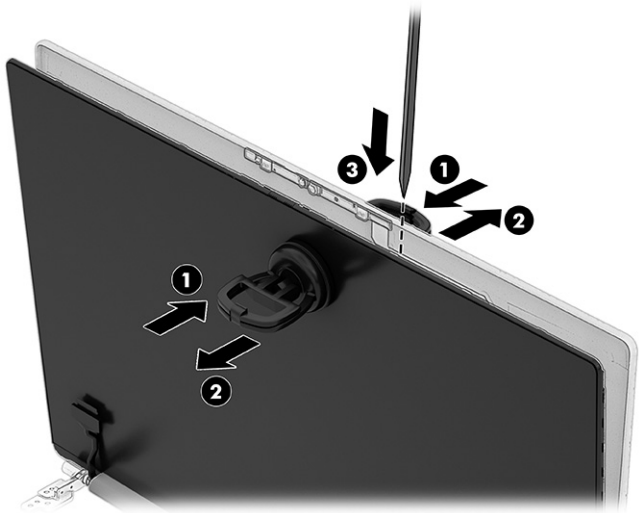

    c. Move the suction cups **(1)** toward the side of display.

d. Pull the suction cups away from each other to slightly separate the panel **(2)** from the display rear cover.

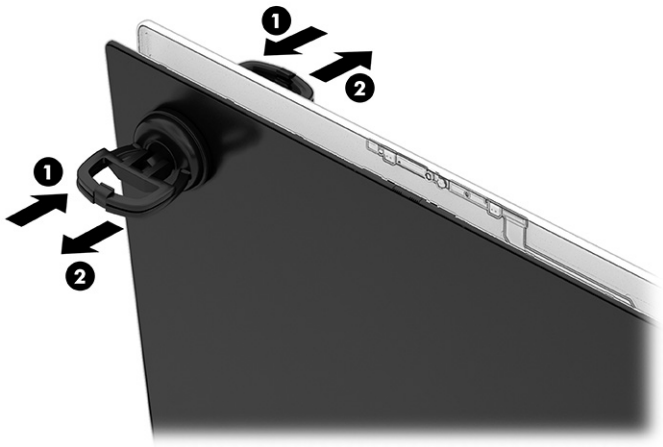

e. On the top left and right sides of the display panel, use tweezers to grasp the ends of the stretchable tape that is installed under the panel.

f. While turning the tweezers **(1)**, wrap the tape around the tweezers as you continue to pull the tape **(2)** out from behind the display panel.

g. Lift the panel and place it next to the display rear cover.

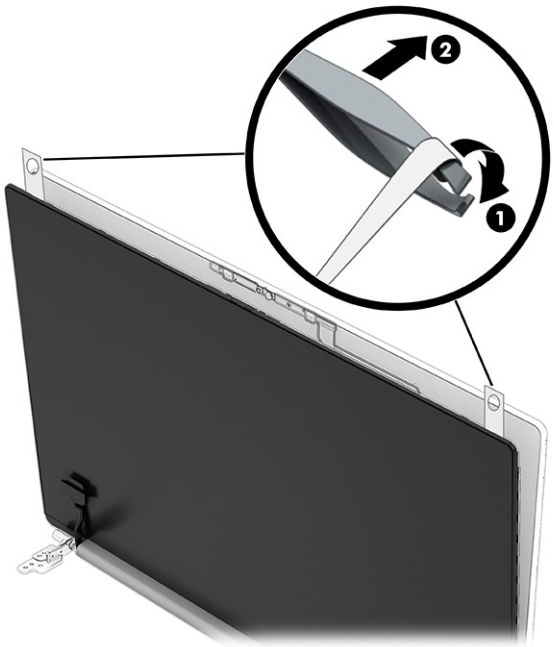

h. Remove the display cable from the clips **(1)** at the bottom of the display.

i. Remove the tape **(2)** from on top of the connector on the back of the display panel.

j. Lift the locking bar **(3)**.

k. Disconnect the cable **(4)** from the panel.

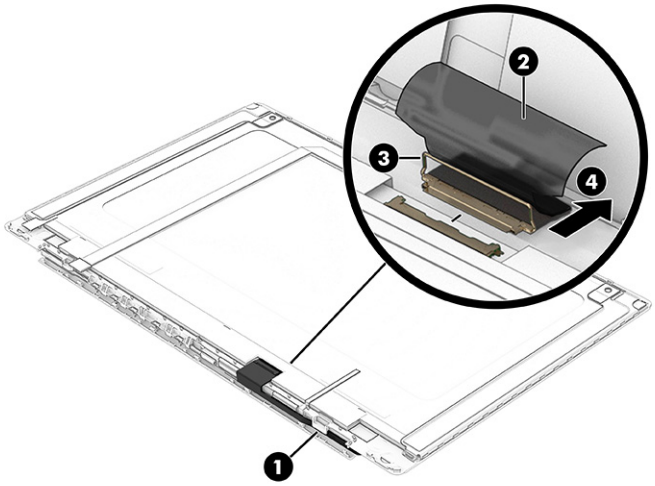

l. When installing a display panel, be sure to install the tape on the left and right sides of the display back cover as shown in the following illustration. Display panel tape is included in the display component spare part kits that require you to remove the display panel to access and replace.

NOTE: When replacing the touch control board or display panel, be sure to update the touch firmware, which is available on the HP product support page.

NOTE: Note that the display tape pull tabs are not located next to the edges of the display, but are positioned slightly more toward the inside of the display.

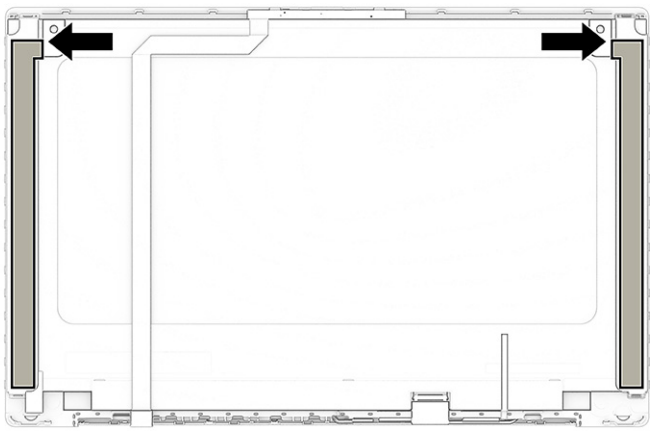

The display panel is available using spare part number N87242-001.

11. To remove the camera module:

a. Insert a tool at the two locations **(1)** shown in the following illustration.

NOTE: Be sure to insert the tool at the locations shown in the following illustration. These locations are reinforced with metal to prevent damage during removal.

b. Carefully lift the module **(2)** to release it from the display back cover. The module is attached with double-sided adhesive.

c. Turn the module over, and then disconnect the cable from the ZIF connector **(3)** on the module. Note that the cable routes underneath the module.

The camera module is available as spare part number N87236-001.

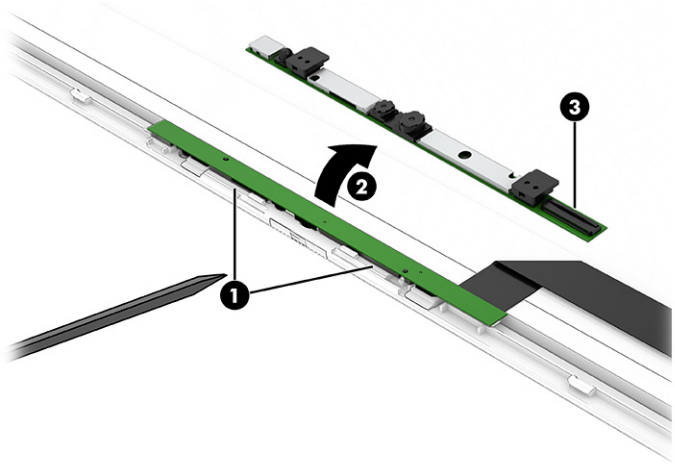

d. When removing the camera module, be sure that the rubber bumpers do not remain on the display after you remove the camera module.

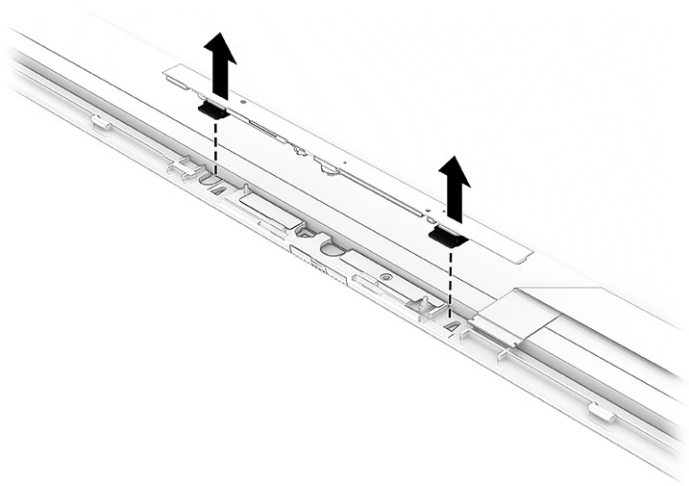

e. When installing a camera module, install the rubber bumpers onto the module.

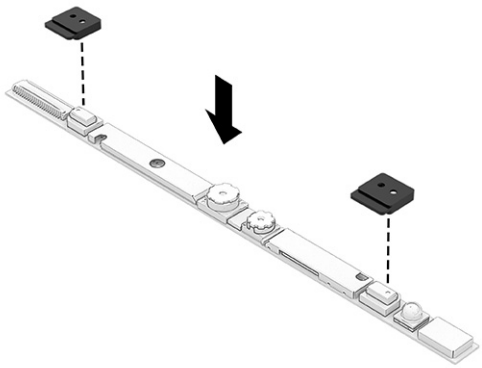

f. Be sure that the rubber bumpers do not cover the microphone holes on the camera module.



g. When installing the camera module, be sure to install a thermal pad under the camera in the location shown by the following illustration.



h. To install the camera module, connect the cable **(1)** to the module, and then place the module **(2)** onto the top of the display rear cover.

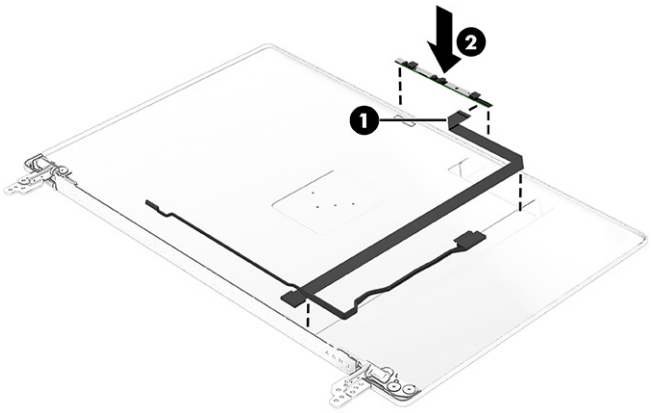

12. To remove the camera/touch control board cable:

    a. Peel the camera cable **(1)** off the top and middle of the inside of the display rear cover.

    b. Remove the cable from the clips **(2)** along the bottom of the display rear cover.

    c. Disconnect the cable from the touch control board **(3)** on the bottom of the display rear cover.

    The camera/touch control board cable is available as spare part number N87223-001

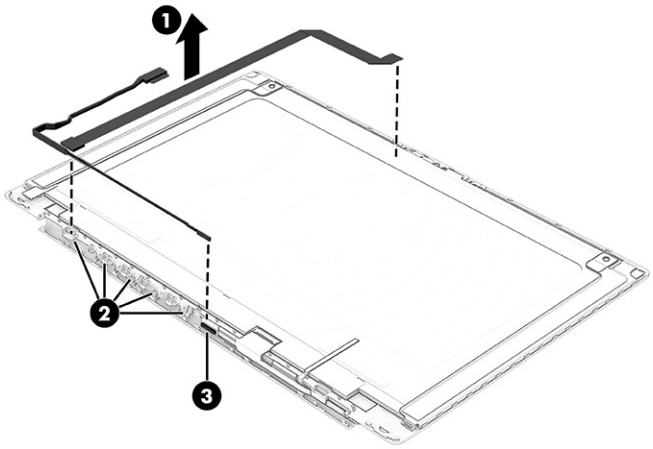

13. To remove the touch control board:

    a. Lift the board **(1)** to release it from the display.

    b. Peel the thin piece of conductive tape **(2)** off the board.

    c. Disconnect the narrow cable from the ZIF connector **(3)** on the board.

d. Disconnect the two thicker cables from the reverse ZIF connectors **(4)** on the board.

The touch control board is available as spare part number N87231-001.

NOTE: When replacing the touch control board or display panel, be sure to update the touch firmware, which is available on the HP product support page.

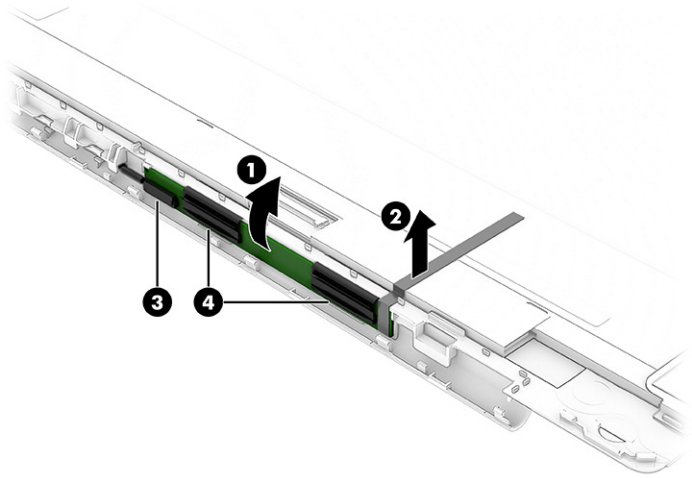

14. To remove the hinges from the display enclosure:

a. Remove the Phillips M2.0 × 3.0 screw **(1)** from each hinge.

b. Remove the three Phillips M2.0 × 2.0 screws **(2)** from each hinge.

c. Remove the display hinges **(3)**.

The display hinges are available using spare part number N87228-001.

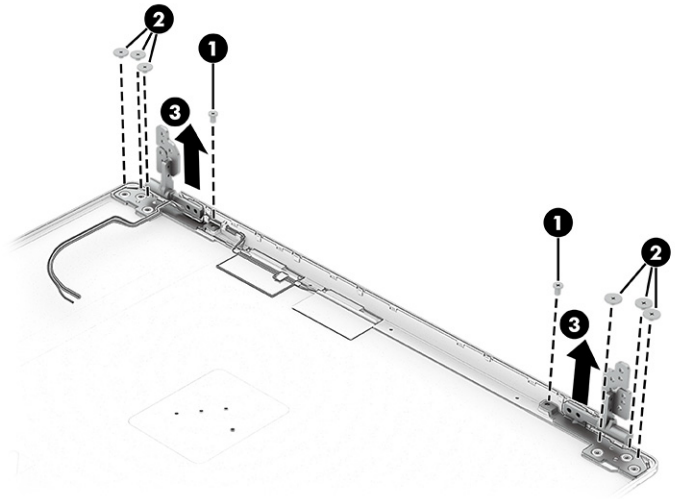

15. To remove the WLAN antennas:

a. Peel the wireless antennas **(1)** off the bottom of the display rear cover.

b. Remove the antenna cables from the clips **(2)** along the bottom of the display rear cover. The antennas are attached with double-sided adhesive. The wireless antennas are available using spare part number N87216-001.

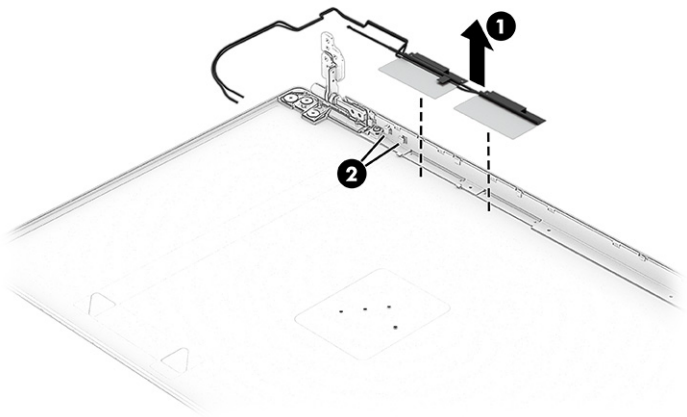

The display back cover with dual antennas and preinstalled display panel tape is available using spare part number N87217-001.

To reassemble and replace the display assembly, reverse these procedures.

Top cover with keyboard

The top cover with keyboard remains after removing all other spare parts from the computer. In this section, the first table provides the main spare part number for the top covers with keyboards. The second table provides the country codes.

Table 5-13 Top cover with keyboard descriptions and part numbers

Description	Spare part number
Natural silver	N87243-xx1

Table 5-14 Spare part country codes

For use in country or region	Spare part number	For use in country or region	Spare part number	For use in country or region	Spare part number
Belgium	-A41	Hungary	-211	Saudi Arabia	-171
Brazil	-201	Iceland	-DD1	Slovenia	-BA1
Bulgaria	-261	India	-D61	South Korea	-AD1
Chile	-161	Israel	-BB1	Spain	-071
Czech Republic/Slovakia	-FL1	Italy	-061	Switzerland	-BG1
Denmark	-081	Japan	-291	Taiwan	-AB1
Denmark, Finland, and Norway	-DH1	The Netherlands	-B31	Thailand	-281
French Canada	-DB1	Northern Africa	-FP1	Turkey	-141
Finland/Sweden	-B71	Norway	-091	Turkey-F	-541
France	-051	Portugal	-131	Ukraine	-BD1

Table 5-14 Spare part country codes (continued)

For use in country or region	Spare part number	For use in country or region	Spare part number	For use in country or region	Spare part number
Germany	-041	Romania	-271	United Kingdom	-031
Greece	-151	Russia	-251	United States	-001

6 Using Setup Utility (BIOS)

Setup Utility, or Basic Input/Output System (BIOS), controls communication between all the input and output devices on the system (such as disk drives, display, keyboard, mouse, and printer). Setup Utility (BIOS) includes settings for the types of devices installed, the startup sequence of the computer, and the amount of system and extended memory.

NOTE: To start Setup Utility on convertible computers, your computer must be in notebook mode and you must use the keyboard attached to your notebook.

Starting Setup Utility (BIOS)

You have several ways to access the Setup Utility (BIOS).

IMPORTANT: Use extreme care when making changes in Setup Utility (BIOS). Errors can prevent the computer from operating properly.

Use one of these options:

- Turn on or restart the computer and quickly press f10.
- Turn on or restart the computer, quickly press esc, and then press f10 when the Start menu is displayed.

Updating Setup Utility (BIOS)

Updated versions of Setup Utility (BIOS) might be available on the HP website. Most BIOS updates on the HP website are packaged in compressed files called *SoftPaqs*. Some download packages contain a file named `Readme.txt`, which contains information regarding installing and troubleshooting the file.

Determining the BIOS version

To decide whether you need to update Setup Utility (BIOS), first determine the BIOS version on your computer.

To reveal the BIOS version information (also known as *ROM date* and *System BIOS*), use one of these options.

- HP Support Assistant
  1. Select the **Search** icon in the taskbar, type `support` in the search box, and then select the **HP Support Assistant** app.

     – or –

     Select the question mark icon in the taskbar.
  2. Under **My notebook**, select **Specifications**.
- Setup Utility (BIOS)
  1. Start Setup Utility (BIOS) (see Starting Setup Utility (BIOS) on page 58).

2. Select **Main**, and then make note of the BIOS version.
3. Select **Exit**, select one of the options, and then follow the on-screen instructions.

- In Windows, press ctrl+alt+s.

To check for later BIOS versions, see Preparing for a BIOS update on page 59.

Preparing for a BIOS update

Be sure to follow all prerequisites before downloading and installing a BIOS update.

IMPORTANT: To reduce the risk of damage to the computer or an unsuccessful installation, download and install a BIOS update only when the computer is connected to reliable external power using the HP AC adapter provided with the computer (select products only), a replacement AC adapter provided by HP, or an AC adapter with the power rating specified on the product label. Do not download or install a BIOS update while the computer is running on battery power, docked in an optional docking device, or connected to an optional power source. During the download and installation, follow these instructions:

- Do not disconnect power from the computer by unplugging the power cord from the AC outlet.
- Do not shut down the computer or initiate Sleep.
- Do not insert, remove, connect, or disconnect any device, cable, or cord.

NOTE: If your computer is connected to a network, consult the network administrator before installing any software updates, especially system BIOS updates.

Downloading a BIOS update

After you review the prerequisites, you can check for and download BIOS updates.

1. Perform one of these tasks:
   - Select the **Search** icon in the taskbar, type `support` in the search box, and then select the **HP Support Assistant** app.
   - Select the question mark icon in the taskbar.
2. Select **Updates**. The **Checking for Updates** window opens, and Windows checks for updates.
3. Follow the on-screen instructions.
4. At the download area, follow these steps:
   a. Identify the most recent BIOS update and compare it to the BIOS version currently installed on your computer. If the update is more recent than your BIOS version, make a note of the date, name, or other identifier. You might need this information to locate the update later, after it has been downloaded to your hard drive.
   b. Follow the on-screen instructions to download your selection to the hard drive.

      Make a note of the path to the location on your hard drive where the BIOS update is downloaded. You will need to access this path when you are ready to install the update.

Installing a BIOS update

BIOS installation procedures vary. Follow any instructions that appear on the screen after the download is complete. If no instructions appear, follow these steps.

1. Select the **Search** icon in the taskbar, type `file` in the search box, and then select **File Explorer**.
2. Select your hard drive designation. The hard drive designation is typically Local Disk (C:).
3. Using the hard drive path you recorded earlier, open the folder that contains the update.
4. Double-click the file that has an .exe extension (for example, *filename*.exe).

   The BIOS installation begins.
5. Complete the installation by following the on-screen instructions.

NOTE: After a message on the screen reports a successful installation, you can delete the downloaded file from your hard drive.

7 Using HP PC Hardware Diagnostics

You can use the HP PC Hardware Diagnostics utility to determine whether your computer hardware is running properly. The three versions are HP PC Hardware Diagnostics Windows, HP PC Hardware Diagnostics UEFI (Unified Extensible Firmware Interface), and (for select products only) Remote HP PC Hardware Diagnostics UEFI, a firmware feature.

Using HP PC Hardware Diagnostics Windows (select products only)

HP PC Hardware Diagnostics Windows is a Windows-based utility that allows you to run diagnostic tests to determine whether the computer hardware is functioning properly. The tool runs within the Windows operating system to diagnose hardware failures.

If HP PC Hardware Diagnostics Windows is not installed on your computer, you must download and install it. To download HP PC Hardware Diagnostics Windows, see Downloading HP PC Hardware Diagnostics Windows on page 62.

Using an HP PC Hardware Diagnostics Windows hardware failure ID code

When HP PC Hardware Diagnostics Windows detects a failure that requires hardware replacement, a 24-digit failure ID code is generated for select component tests. For interactive tests, such as keyboard, mouse, or audio and video palette, you must perform troubleshooting steps before you can receive a failure ID.

You have several options after you receive a failure ID:

- Select **Next** to open the Event Automation Service (EAS) page, where you can log the case.
- Scan the QR code with your mobile device, which takes you to the EAS page, where you can log the case.
- Select the box next to the 24-digit failure ID to copy your failure code and send it to support.

Accessing HP PC Hardware Diagnostics Windows

After HP PC Hardware Diagnostics Windows is installed, you can access it from HP Support Assistant or the Start menu.

Accessing HP PC Hardware Diagnostics Windows from HP Support Assistant

After HP PC Hardware Diagnostics Windows is installed, follow these steps to access it from HP Support Assistant:

1. Complete one of the following tasks:
   - Select the **Search** icon in the taskbar, type `support` in the search box, and then select the **HP Support Assistant** app.
   - Select the question mark icon in the taskbar.
2. Select **Fixes & Diagnostics**.

3. Select **Run hardware diagnostics**, and then select **Launch**.
4. When the tool opens, select the type of diagnostic test that you want to run, and then follow the on-screen instructions.

NOTE: To stop a diagnostic test, select **Cancel**.

Accessing HP PC Hardware Diagnostics Windows from the Start menu (select products only)

After HP PC Hardware Diagnostics Windows is installed, follow these steps to access it from the Start menu:

1. Select the **Start** button, and then select **All apps**.
2. Select **HP PC Hardware Diagnostics Windows**.
3. When the tool opens, select the type of diagnostic test that you want to run, and then follow the on-screen instructions.

NOTE: To stop a diagnostic test, select **Cancel**.

Downloading HP PC Hardware Diagnostics Windows

The HP PC Hardware Diagnostics Windows downloading instructions are provided in English only. You must use a Windows computer to download this tool because only .exe files are provided.

Downloading the latest HP PC Hardware Diagnostics Windows version from HP

To download HP PC Hardware Diagnostics Windows from HP, follow these steps:

1. Go to http://www.hp.com/go/techcenter/pcdiags. The HP PC Diagnostics home page is displayed.
2. Select **Download HP Diagnostics Windows**, and then select the specific Windows diagnostics version to download to your computer or a USB flash drive.

The tool downloads to the selected location.

Downloading the HP PC Hardware Diagnostics Windows from the Microsoft Store

You can download the HP PC Hardware Diagnostics Windows from the Microsoft Store:

1. Select the Microsoft Store app on your desktop or select the **Search** icon in the taskbar, and then type `Microsoft Store` in the search box.
2. Type `HP PC Hardware Diagnostics Windows` in the **Microsoft Store** search box.
3. Follow the on-screen directions.

The tool downloads to the selected location.

Downloading HP Hardware Diagnostics Windows by product name or number (select products only)

You can download HP PC Hardware Diagnostics Windows by product name or number.

NOTE: For some products, you might have to download the software to a USB flash drive by using the product name or number.

1. Go to http://www.hp.com/support.
2. Select **Software and Drivers**, select your type of product, and then enter the product name or number in the search box that is displayed.
3. In the **Diagnostics** section, select **Download**, and then follow the on-screen instructions to select the specific Windows diagnostics version to be downloaded to your computer or USB flash drive.

The tool downloads to the selected location.

Installing HP PC Hardware Diagnostics Windows

To install HP PC Hardware Diagnostics Windows, navigate to the folder on your computer or the USB flash drive where the .exe file downloaded, double-click the .exe file, and then follow the on-screen instructions.

Using HP PC Hardware Diagnostics UEFI

HP PC Hardware Diagnostics Unified Extensible Firmware Interface (UEFI) allows you to run diagnostic tests to determine whether the computer hardware is functioning properly. The tool runs outside the operating system so that it can isolate hardware failures from issues that are caused by the operating system or other software components.

NOTE: For some products, you must use a Windows computer and a USB flash drive to download and create the HP UEFI support environment because only .exe files are provided. For more information, see Downloading HP PC Hardware Diagnostics UEFI to a USB flash drive on page 64.

If your PC does not start in Windows, you can use HP PC Hardware Diagnostics UEFI to diagnose hardware issues.

Using an HP PC Hardware Diagnostics UEFI hardware failure ID code

When HP PC Hardware Diagnostics UEFI detects a failure that requires hardware replacement, a 24-digit failure ID code is generated.

For assistance in solving the problem, complete one of these tasks:

- Select **Contact HP**, accept the HP privacy disclaimer, and then use a mobile device to scan the failure ID code that appears on the next screen. The HP Customer Support - Service Center page appears with your failure ID and product number automatically filled in. Follow the on-screen instructions.
- Contact support, and provide the failure ID code.

Starting HP PC Hardware Diagnostics UEFI

To start HP PC Hardware Diagnostics UEFI, follow this procedure.

1. Turn on or restart the computer, and quickly press esc.
2. Press f2.

   The BIOS searches three places for the diagnostic tools, in the following order:

a. Connected USB flash drive

NOTE: To download the HP PC Hardware Diagnostics UEFI tool to a USB flash drive, see Downloading the latest HP PC Hardware Diagnostics UEFI version on page 65.

b. Hard drive

c. BIOS

3. When the diagnostic tool opens, select the type of diagnostic test that you want to run, and then follow the on-screen instructions.

Starting HP PC Hardware Diagnostics UEFI through HP Hotkey Support software (select products only)

This section describes how to start HP PC Hardware Diagnostics UEFI through HP Hotkey Support software.

NOTE: You must disable fast boot to access HP PC Hardware Diagnostics UEFI from the HP System Information application.

To disable fast boot:

1. Turn on or restart the computer, and when the HP logo appears, press f10 to enter Computer Setup.
2. Select **Advanced**, and then select **Boot Options**.
3. Clear **Fast Boot**.
4. Select **Save Changes and Exit**, and then select **Yes**.

To start HP PC Hardware Diagnostics UEFI through HP Hotkey Support software, follow this procedure.:

1. From the **Start** menu, open the HP System Information Application or press fn+esc.
2. In HP System Information screen, select **Run System Diagnostics**, select **Yes** to run the application, and then select **Restart**.

IMPORTANT: To prevent loss of data, save your work in all open apps before restarting your computer.

NOTE: When the restart is complete, the computer opens the HP PC Hardware Diagnostics UEFI Application. Proceed with the troubleshooting tests.

Downloading HP PC Hardware Diagnostics UEFI to a USB flash drive

Downloading HP PC Hardware Diagnostics UEFI to a USB flash drive can be useful in some situations.

- HP PC Hardware Diagnostics UEFI is not included in the preinstallation image.
- HP PC Hardware Diagnostics UEFI is not included in the HP Tool partition.
- The hard drive is damaged.

NOTE: The HP PC Hardware Diagnostics UEFI downloading instructions are provided in English only, and you must use a Windows computer to download and create the HP UEFI support environment because only `.exe` files are provided.

Downloading the latest HP PC Hardware Diagnostics UEFI version

To download the latest HP PC Hardware Diagnostics UEFI version to a USB flash drive, follow this procedure:

1. Go to http://www.hp.com/go/techcenter/pcdiags. The HP PC Diagnostics home page is displayed.
2. Select **Download HP Diagnostics UEFI**, and then select **Run**.

Downloading HP PC Hardware Diagnostics UEFI by product name or number (select products only)

You can download HP PC Hardware Diagnostics UEFI by product name or number (select products only) to a USB flash drive.

NOTE: For some products, you might have to download the software to a USB flash drive by using the product name or number.

1. Go to http://www.hp.com/support.
2. Enter the product name or number, select your computer, and then select your operating system.
3. In the **Diagnostics** section, follow the on-screen instructions to select and download the specific UEFI Diagnostics version for your computer.

Using Remote HP PC Hardware Diagnostics UEFI settings (select products only)

Remote HP PC Hardware Diagnostics UEFI is a firmware (BIOS) feature that downloads HP PC Hardware Diagnostics UEFI to your computer. It can then run the diagnostics on your computer, and it might upload results to a preconfigured server.

For more information about Remote HP PC Hardware Diagnostics UEFI, go to http://www.hp.com/go/techcenter/pcdiags, and then select **Find out more**.

Downloading Remote HP PC Hardware Diagnostics UEFI

Remote HP PC Hardware Diagnostics UEFI is also available as a SoftPaq that you can download to a server.

Downloading the latest Remote HP PC Hardware Diagnostics UEFI version

You can download the latest Remote HP PC Hardware Diagnostics UEFI version to a USB flash drive.

1. Go to http://www.hp.com/go/techcenter/pcdiags. The HP PC Diagnostics home page is displayed.
2. Select **Download Remote Diagnostics**, and then select **Run**.

Downloading Remote HP PC Hardware Diagnostics UEFI by product name or number

You can download Remote HP PC Hardware Diagnostics UEFI by product name or number.

NOTE: For some products, you might have to download the software by using the product name or number.

1. Go to http://www.hp.com/support.

2. Select **Software and Drivers**, select your type of product, enter the product name or number in the search box that is displayed, select your computer, and then select your operating system.
3. In the **Diagnostics** section, follow the on-screen instructions to select and download the **Remote UEFI** version for the product.

Customizing Remote HP PC Hardware Diagnostics UEFI settings

Using the Remote HP PC Hardware Diagnostics setting in Computer Setup (BIOS), you can perform several customizations.

- Set a schedule for running diagnostics unattended. You can also start diagnostics immediately in interactive mode by selecting **Execute Remote HP PC Hardware Diagnostics UEFI**.
- Set the location for downloading the diagnostic tools. This feature provides access to the tools from the HP website or from a server that has been preconfigured for use. Your computer does not require the traditional local storage, such as a hard drive or USB flash drive, to run remote diagnostics.
- Set a location for storing the test results. You can also set the user name and password that you use for uploads.
- Display status information about the diagnostics run previously.

To customize Remote HP PC Hardware Diagnostics UEFI settings, follow these steps:

1. Turn on or restart the computer, and when the HP logo appears, press f10 to enter Computer Setup.
2. Select **Advanced**, and then select **Settings**.
3. Make your customization selections.
4. Select **Main**, then select **Save Changes and Exit** to save your settings.

Your changes take effect when the computer restarts.

8 Backing up, restoring, and recovering

You can use Windows tools or HP software to back up your information, create a restore point, reset your computer, create recovery media, or restore your computer to its factory state. Performing these standard procedures can return your computer to a working state faster.

IMPORTANT: If you are performing recovery procedures on a tablet, the tablet battery must be at least 70% charged before you start the recovery process.

IMPORTANT: For a tablet with a detachable keyboard, connect the tablet to the keyboard base before beginning any recovery process.

Backing up information and creating recovery media

These methods of creating recovery media and backups are available on select products only.

Using Windows tools for backing up

HP recommends that you back up your information immediately after initial setup. You can do this task either using Windows Backup locally with an external USB flash drive or using online tools.

NOTE: If computer storage is 32 GB or less, Microsoft® System Restore is disabled by default.

Using the HP Cloud Recovery Download Tool to create recovery media (select products only)

You can use the HP Cloud Recovery Download Tool to create HP Recovery media on a bootable USB flash drive.

For details:

- Go to http://www.hp.com, search for HP Cloud Recovery, and then select the result that matches the type of computer that you have.

NOTE: If you cannot create recovery media yourself, contact support to obtain recovery discs. Go to http://www.hp.com/support, select your country or region, and then follow the on-screen instructions.

IMPORTANT: HP recommends that you follow the Restoring and recovery methods on page 68 to restore your computer before you obtain and use the HP recovery discs. Using a recent backup can return your machine to a working state sooner than using the HP recovery discs. After the system is restored, reinstalling all the operating system software released since your initial purchase can be a lengthy process.

Restoring and recovering your system

You have several tools available to recover your system both within and outside of Windows if the desktop cannot load.

HP recommends that you attempt to restore your system using the Restoring and recovery methods on page 68.

Creating a system restore

System Restore is available in Windows. The System Restore software can automatically or manually create restore points, or snapshots, of the system files and settings on the computer at a particular point.

When you use System Restore, it returns your computer to its state at the time you made the restore point. Your personal files and documents should not be affected.

Restoring and recovery methods

After you run the first method, test to see whether the issue still exists before you proceed to the next method, which might now be unnecessary.

1. Run a Microsoft System Restore.
2. Run Reset this PC.

NOTE: The options **Remove everything** and then **Fully clean the drive** can take several hours to complete and leave no information on your computer. It is the safest way to reset your computer before you recycle it.

3. Recover using HP Recovery media. For more information, see Recovering using HP Recovery media on page 68.

For more information about the first two methods, see the Get Help app:

- Select the **Start** button, select **All apps**, select the **Get Help** app, and then enter the task you want to perform.

NOTE: You must be connected to the internet to access the Get Help app.

Recovering using HP Recovery media

You can use HP Recovery media to recover the operating system and drivers that were installed at the factory. On select products, you can create recovery media on a bootable USB flash drive using the HP Cloud Recovery Download Tool.

For details, see Using the HP Cloud Recovery Download Tool to create recovery media (select products only) on page 67.

NOTE: If you cannot create recovery media yourself, contact support to obtain recovery discs. Go to http://www.hp.com/support, select your country or region, and then follow the on-screen instructions.

To recover your system:

- Insert the HP Recovery media, and then restart the computer.

NOTE: HP recommends that you follow the Restoring and recovery methods on page 68 to restore your computer before you obtain and use the HP recovery discs. Using a recent backup can return your machine to a working state sooner than using the HP recovery discs. After the system is restored, reinstalling all the operating system software released since your initial purchase can be a lengthy process.

Changing the computer boot order

If your computer does not restart using the HP Recovery media, you can change the computer boot order, which is the order of devices listed in BIOS for startup information. You can select an optical drive or a USB flash drive, depending on the location of your HP Recovery media.

IMPORTANT: For a tablet with a detachable keyboard, connect the tablet to the keyboard base before beginning these steps.

To change the boot order:

1. Insert the HP Recovery media.
2. Access the system **Startup** menu.
   - For computers or tablets with keyboards attached, turn on or restart the computer or tablet, quickly press esc, and then press f9 for boot options.
   - For tablets without keyboards, turn on or restart the tablet, and then quickly press and hold one of the following buttons:
     - Volume up
     - Volume down

     Then select **f9**.
3. Select the optical drive or USB flash drive from which you want to boot, and then follow the on-screen instructions.

Using HP Sure Recover (select products only)

Select computer models are configured with HP Sure Recover, a PC operating system (OS) recovery solution built into the hardware and software. HP Sure Recover can fully restore the HP OS image without installed recovery software.

Using HP Sure Recover, an administrator or user can restore the system and install:

- Latest version of the operating system
- Platform-specific device drivers
- Software applications, in the case of a custom image

To access the latest documentation for HP Sure Recover, go to http://www.hp.com/support. Follow the on-screen instructions to find your product and locate your documentation.

9 Specifications

This chapter provides specifications for your computer system.

Computer specifications

This section provides specifications for your computer. When you travel with your computer, the computer dimensions and weights, as well as input power ratings and operating specifications, provide helpful information.

Table 9-1 Computer specifications

	Metric	U.S.
Dimensions		
Width	**396.0 mm**	15.6 in
Depth	**258.6 mm**	10.2 in
Height	**19.9 mm**	0.8 in
Weight		
UMA models	**2502.4 g**	5.5 lb
Discrete models	**2585.4 g**	5.7 lb
Input power		
Operating voltage and current	5 V DC @ 3 A / 9 V DC @ 3 A / 12 V DC @ 5 A / 15 V DC @ 4.33 A / 20 V DC @ 3.25 A - 65 W USB-C 5 V DC @ 3 A / 9 V DC @ 3 A / 10 V DC @ 5 A / 12 V DC @ 5 A / 15 V DC @ 4.33 A / 20 V DC @ 3.25 A - 65 W USB-C 5 V DC @ 3 A / 9 V DC @ 3 A / 12 V DC @ 5 A / 15 V DC @ 5 A / 20 V DC @ 5 A / 5 V DC USB-A port @ 2 A - 100 W USB-C + 10 W USB-A	
Temperature		
Operating	**5°C to 35°C**	41°F to 95°F
Nonoperating	**-20°C to 60°C**	-4°F to 140°F
Relative humidity (noncondensing)		
Operating	10% to 90%	
Nonoperating	5% to 95%	
Maximum altitude (unpressurized)		
Operating	**-15 m to 3,048 m**	-50 ft to 10,000 ft

Table 9-1 Computer specifications (continued)

	Metric	U.S.
Nonoperating	-15 m to 12,192 m	-50 ft to 40,000 ft

NOTE: Applicable product safety standards specify thermal limits for plastic surfaces. The device operates well within this range of temperatures.

Display specifications

This section provides specifications for your display.

Table 9-2 Display specifications

	Metric	U.S.
Active diagonal size	43.9 cm	17.3 in
Resolution	1920 × 1080 (FHD)	
Surface treatment	Antiglare	
Brightness	300 nits	
Viewing angle	UWVA	
Backlight	LED	
Display panel interface	eDP	

Solid-state drive specifications

This section provides specifications for your solid-state drives.

Table 9-3 Solid-state drive specifications

	512 GB*	1 TB*	2 TB*
Dimensions			
Height	1.0 mm	1.0 mm	1.0 mm
Length	50.8 mm	50.8 mm	50.8 mm
Width	28.9 mm	28.9 mm	28.9 mm
Weight	< 10 g	< 10 g	< 10 g
Interface type	PCIe	PCIe	PCIe
Ready time, maximum (to not busy)	< 1.0 ms	1.0 ms	1.0 ms
Access times, logical	0.1 ms	0.1 ms	0.1 ms
Transfer rate			
Sequential read	up to 2150 MBps	up to 2150 MBps	up to 3800 MBps
Random read	Up to 300,000 IOPs	Up to 300,000 IOPs	Up to 300,000 IOPs
Sequential write	up to 1550 MBps	up to 1550 MBps	up to 2670 MBps

Table 9-3 Solid-state drive specifications (continued)

	512 GB*	1 TB*	2 TB*
Random write	Up to 100,000 IOPs	Up to 100,000 IOPs	Up to 100,000 IOPs
Total logical sectors	1,000,215,216	1,500,336,388	2,998,846
Operating temperature	**0°C to 70°C** (32°F to 158°F)	**0°C to 70°C** (32°F to 158°F)	**0°C to 70°C** (32°F to 158°F)

NOTE: *1 GB = 1 billion bytes when referring to hard drive storage capacity. Actual accessible capacity is less. Actual drive specifications might differ slightly.

Certain restrictions and exclusions apply. Contact support for details.

10 Power cord set requirements

This chapter provides power cord requirements for countries and regions.

The wide-range input feature of the computer permits it to operate from any line voltage from 100 V AC to 120 V AC, or from 220 V AC to 240 V AC.

The three-conductor power cord set included with the computer meets the requirements for use in the country or region where the equipment is purchased.

Power cord sets for use in other countries or regions must meet the requirements of the country and region where the computer is used.

Requirements for all countries

These power cord requirements are applicable to all countries and regions.

- The length of the power cord set must be at least **1.0 m** (3.3 ft) and no more than **2.0 m** (6.5 ft).
- All power cord sets must be approved by an acceptable accredited agency responsible for evaluation in the country or region where the power cord set will be used.
- The power cord sets must have a minimum current capacity of 10 A and a nominal voltage rating of 125 V AC or 250 V AC, as required by the power system of each country or region.
- The appliance coupler must meet the mechanical configuration of an EN 60 320/IEC 320 Standard Sheet C13 connector for mating with the appliance inlet on the back of the computer.

Requirements for specific countries and regions

To determine power cord requirements for specific countries and regions, use this table.

Table 10-1 Power cord requirements for specific countries and regions

Country/region	Accredited agency	Applicable note number
Argentina	IRAM	1
Australia	SAA	1
Austria	OVE	1
Belgium	CEBEC	1
Brazil	ABNT	1
Canada	CSA	2
Chile	IMQ	1
Denmark	DEMKO	1
Finland	FIMKO	1
France	UTE	1

Table 10-1 Power cord requirements for specific countries and regions (continued)

Country/region	Accredited agency	Applicable note number
Germany	VDE	1
India	BIS	1
Israel	SII	1
Italy	IMQ	1
Japan	JIS	3
Netherlands	KEMA	1
New Zealand	SANZ	1
Norway	NEMKO	1
People's Republic of China	CCC	4
Saudi Arabia	SASO	7
Singapore	PSB	1
South Africa	SABS	1
South Korea	KTL	5
Sweden	SEMKO	1
Switzerland	SEV	1
Taiwan	BSMI	6
Thailand	TISI	1
United Kingdom	ASTA	1
United States	UL	2

1. The flexible cord must be Type HO5VV-F, three-conductor, 0.75 mm² conductor size. Power cord set fittings (appliance coupler and wall plug) must bear the certification mark of the agency responsible for evaluation in the country or region where it will be used.
2. The flexible cord must be Type SVT/SJT or equivalent, No. 18 AWG, three-conductor. The wall plug must be a two-pole grounding type with a NEMA 5-15P (15 A, 125 V AC) or NEMA 6-15P (15 A, 250 V AC) configuration. CSA or C-UL mark. UL file number must be on each element.
3. The appliance coupler, flexible cord, and wall plug must bear a T mark and registration number in accordance with the Japanese Dentori Law. The flexible cord must be Type VCTF, three-conductor, 0.75 mm² or 1.25 mm² conductor size. The wall plug must be a two-pole grounding type with a Japanese Industrial Standard C8303 (7 A, 125 V AC) configuration.
4. The flexible cord must be Type RVV, three-conductor, 0.75 mm² conductor size. Power cord set fittings (appliance coupler and wall plug) must bear the CCC certification mark.
5. The flexible cord must be Type H05VV-F three-conductor, 0.75 mm² conductor size. KTL logo and individual approval number must be on each element. Approval number and logo must be printed on a flag label.
6. The flexible cord must be Type HVCTF three-conductor, 1.25 mm² conductor size. Power cord set fittings (appliance coupler, cable, and wall plug) must bear the BSMI certification mark.

7. For 127 V AC, the flexible cord must be Type SVT or SJT 3-conductor, 18 AWG, with plug NEMA 5-15P (15 A, 125 V AC), with UL and CSA or C-UL marks. For 240 V AC, the flexible cord must be Type H05VV-F three-conductor, 0.75 mm² or 1.00 mm² conductor size, with plug BS 1363/A with BSI or ASTA marks.

11 Recycling

When a nonrechargeable or rechargeable battery has reached the end of its useful life, do not dispose of the battery in general household waste. Follow the local laws and regulations in your area for battery disposal.

HP encourages customers to recycle used electronic hardware, HP original print cartridges, and rechargeable batteries. For more information about recycling programs, see the HP website at http://www.hp.com/recycle.

Index

A

AC adapter and battery light, identifying 6
AC adapter, spare part number 19
action key, identifying 11
antenna
  illustrated 19
  spare part number 19
audio-out (headphone)/audio-in (microphone) combo jack, identifying 5
audio, product description 2

B

backup, creating 67
backups 67
battery 17
  spare part number 17
BIOS
  determining version 58
  downloading an update 59
  starting the Setup Utility 58
  updating 58
Bluetooth label 13
boot order, changing 69
bottom components 12
bottom cover
  illustrated 17
  removal 29
  spare part number 29
  spare part numbers 17
buttons
  left touchpad 9
  power 12
  right touchpad 9

C

camera
  identifying 8
camera light, identifying 8
camera module
  illustrated 19
  spare part number 19
camera privacy cover, identifying 8
camera/touch control board cable
  illustrated 19
  spare part number 19
caps lock light 11
caring for your computer 24
cautions
  electrostatic discharge 20, 21
cleaning your computer 24
  caring for wood veneer 26
  disinfecting 25
  HP Easy Clean 24
  removing dirt and debris 24
components
  bottom 12
  display 7
  keyboard area 9
  left side 5
  lights 10
  right side 5
  touchpad 9
computer major components 16
computer specifications 70
connectors
  power 6, 7
control zone 9

D

display
  specifications 70, 71
display assembly
  subcomponents 18
display back cover
  illustrated 19
  spare part numbers 19
display components 7
display panel
  illustrated 19
  product description 1
  spare part numbers 19
display panel adhesive strips
  spare part number 19
display panel cable
  illustrated 19
  spare part number 19

E

electrostatic discharge (ESD) 20, 21
  preventing damage 20-22
esc key, identifying 11

F

fan
  removal 38
  spare part number 38
fans
  illustrated 17
  spare part numbers 17
fn key, identifying 11

G

graphics controller, product description 1
grounding methods 20-22
guidelines
  packaging 20, 26
  transporting 20, 26
  workstation 20

H

hard drive
  product description 1
  specifications 70
HDMI port
  identifying 6
heat sink 17
  removal 42
  spare part number 42
  spare part numbers 17
hinge
  illustrated 19
  spare part numbers 19
HP PC Hardware Diagnostics UEFI
  downloading 64
  failure ID code 63
  HP Hotkey Support software 64
  starting 63, 64
  using 63
HP PC Hardware Diagnostics Windows
  accessing 61, 62

downloading 62
failure ID code 61
installing 63
using 61
HP Recovery media
recovery 68
HP Sure Recover 69

I

illustrated parts catalog 16
IMAX Enhanced Mode,
identifying 7
integrated numeric keypad,
identifying 12
internal microphones,
identifying 8
IR board
illustrated 18
removal 47
spare part numbers 18, 47

J

jacks
audio-out (headphone)/audio-in
(microphone) 5

K

keyboard
product description 2
keypad, integrated numeric 12
keys
action 11
esc 11
fn 11
num lock 12
Windows 11
Windows Copilot 12

L

labels
Bluetooth 13
regulatory 13
serial number 13
service 13
wireless certification 13
WLAN 13
left control zone, identifying 9, 10
left side components 5
lights
AC adapter and battery 6
camera 8
caps lock 11
microphone mute 11
mute 11
power 11
touchpad 9
low blue light mode 7

M

memory module
product description 1
memory modules
removal 34
spare part numbers 34
microphone
product description 2
microphone mute light,
identifying 11
model name 1
mute light, identifying 11

N

num lock key, identifying 12

O

operating system, product
description 3

P

packaging guidelines 20, 26
pointing device, product
description 2
port with HP Sleep and Charge,
identifying 6
ports
HDMI 6
product description 2
USB 5
USB 10 Gbps with HP Sleep and
Charge 6
USB Type-C power connector
and 10 Gbps port with HP
Sleep and Charge and
DisplayPort output 7
USB Type-C power connector
and 10 Gbps Thunderbolt
port with HP Sleep and
Charge and DisplayPort
output 6
power button, identifying 12
power connector
identifying 6, 7
power cord
requirements for all
countries 73
requirements for specific
countries and regions 73
set requirements 73
spare part numbers 19
power light, identifying 11
power requirements, product
description 3
primary storage
product description 1
processor
product description 1
processor, product description 1
product description
audio 2
display panel 1
graphics controller 1
hard drive 1
keyboard 2
memory module 1
microphone 2
operating system 3
pointing device 2
ports 2
power requirements 3
primary storage 1
product name 1
security 3
sensors 3
serviceability 4
solid-state drive 1
video 2
wireless 2
product name 1
product name and number,
computer 13

R

recovery 67
discs 68
media 68
USB flash drive 68
recovery media 67
creating using HP Cloud
Recovery Download
Tool 67
creating using Windows
tools 67
regulatory information
regulatory label 13
wireless certification labels 13
Remote HP PC Hardware
Diagnostics UEFI settings
customizing 66
using 65

removal and replacement
procedures 29
solid-state drive 32
restoring 67
restoring and recovery
methods 68
right control zone, identifying 9, 10
right side components 5

S

security, product description 3
sensors, product description 3
serial number, computer 13
service labels, locating 13
serviceability, product
description 4
solid-state drive
illustrated 17
product description 1
removal and replacement 32
spare part numbers 17
specifications 71
speaker
illustrated 17
removal 39
spare part number 17, 39
speakers 13
special keys
identifying 11
using 11
specifications
computer 70
display 70, 71
hard drive 70
solid-state drive 71
static electricity 20, 21
support information 27
system board
illustrated 17
removal 44
spare part numbers 17, 44
system restore 68
system restore point, creating 67

T

top cover
spare part numbers 56
touch control board
spare part number 19
touchpad
illustrated 17
removal 40
settings 9
spare part numbers 17, 40
touchpad buttons
identifying 9
touchpad components 9
touchpad light, identifying 9
touchpad settings, adjusting 9
touchpad zone, identifying 9, 10
transporting guidelines 20, 26
traveling with the computer 13

U

USB 10 Gbps port, identifying 5
USB Type-C power connector and 10 Gbps port with HP Sleep and Charge and DisplayPort output, identifying 7
USB Type-C power connector and 10 Gbps Thunderbolt port with HP Sleep and Charge and DisplayPort output, identifying 6
USB/audio board
removal 41
spare part number 41

V

vent, identifying 13
video, product description 2

W

wake-on-voice 7
Windows
backup 67
recovery media 67
system restore point 67
Windows Copilot key,
identifying 12
Windows key, identifying 11
Windows tools, using 67
wireless antennas, identifying 8
wireless certification label 13
wireless, product description 2
WLAN antenna kit
illustrated 19
spare part number 19
WLAN antennas, identifying 8
WLAN device 13
WLAN label 13
WLAN module
removal 36
spare part numbers 36
workstation guidelines 20