Maintenance and Service Guide

SUMMARY

This guide provides maintenance information about such topics as spare parts, removal and replacement of parts, security, and backing up.

Legal information

© Copyright 2023 HP Development Company, L.P.

AMD, Athlon, Freesync, and Radeon are trademarks of Advanced Micro Devices, Inc. Bluetooth is a trademark owned by its proprietor and used by HP Inc. under license. The terms HDMI, HDMI High-Definition Multimedia Interface, and the HDMI Logo are trademarks or registered trademarks of HDMI Licensing Administrator, Inc. Thunderbolt and the Thunderbolt logo are trademarks of Intel Corporation or its subsidiaries in the U.S. and/or other countries. MediaTek is a trademark of MediaTek Inc. Microsoft and Windows are either registered trademarks or trademarks of Microsoft Corporation in the United States and/or other countries. NVMe is a registered trademark of NVM Express. PCIe is a US registered trademark of PCI-SIG. Realtek is a trademark of Realtek Semiconductor Corporation. SD™, SDHC™, SDXC™, and microSD™ are trademarks or registered trademarks of SD-3C LLC. USB Type-C and USB-C are registered trademarks of USB Implementers Forum. Miracast and Wi-Fi are registered trademarks of Wi-Fi Alliance.

The information contained herein is subject to change without notice. The only warranties for HP products and services are set forth in the express warranty statements accompanying such products and services. Nothing herein should be construed as constituting an additional warranty. HP shall not be liable for technical or editorial errors or omissions contained herein.

First Edition: April 2023

Document Part Number: N41452-001

Product notice

This guide describes features that are common to most models. Some features may not be available on your computer.

Not all features are available in all editions or versions of Windows. Systems may require upgraded and/or separately purchased hardware, drivers, software or BIOS update to take full advantage of Windows functionality. Windows is automatically updated, which is always enabled. High-speed internet and Microsoft account required. ISP fees may apply and additional requirements may apply over time for updates. See http://www.windows.com. **If your product ships with Windows in S Mode:** Windows in S Mode works exclusively with apps from the Microsoft Store within Windows. Certain default settings, features, and apps cannot be changed. Some accessories and apps that are compatible with Windows may not work (including some antivirus, PDF writers, driver utilities, and accessibility apps), and performance may vary, even if you switch out of S Mode. If you switch to Windows, you cannot switch back to S Mode. Learn more at Windows.com/SmodeFAQ.

To access the latest user guides, go to http://www.hp.com/support, and follow the instructions to find your product. Then select **Manuals**.

Software terms

By installing, copying, downloading, or otherwise using any software product preinstalled on this computer, you agree to be bound by the terms of the HP End User License Agreement (EULA). If you do not accept these license terms, your sole remedy is to return the entire unused product (hardware and software) within 14 days for a full refund subject to the refund policy of your seller.

For any further information or to request a full refund of the price of the computer, please contact your seller.

Safety warning notice

Reduce the possibility of heat-related injuries or of overheating the computer by following the practices described.

⚠ **WARNING!** To reduce the possibility of heat-related injuries or of overheating the computer, do not place the computer directly on your lap or obstruct the computer air vents. Use the computer only on a hard, flat surface. Do not allow another hard surface, such as an adjoining optional printer, or a soft surface, such as pillows or rugs or clothing, to block airflow. Also, do not allow the AC adapter to come into contact with the skin or a soft surface, such as pillows or rugs or clothing, during operation. The computer and the AC adapter comply with the user-accessible surface temperature limits defined by applicable safety standards.

Table of contents

1 Product description 1

2 Getting to know your computer 5

Right side 5

Left side 7

Display 8

Low blue light mode (select products only) 8

Keyboard area 9

Touchpad settings and components 9

Touchpad settings 9

Adjusting touchpad settings 9

Turning on the touchpad 9

Touchpad components 10

Lights 10

Special keys 11

Bottom 13

Rear 13

Labels 14

3 Illustrated parts catalog 16

Computer major components 16

Display assembly subcomponents 18

Miscellaneous parts 19

4 Removal and replacement procedures preliminary requirements 21

Tools required 21

Service considerations 21

Plastic parts 21

Cables and connectors 21

Drive handling 21

Electrostatic discharge information 22

Generating static electricity 22

Preventing electrostatic damage to equipment 23

Personal grounding methods and equipment 23

Grounding the work area 24

Recommended materials and equipment 24

Cleaning your computer 25

Enabling HP Easy Clean (select products only) 25

Removing dirt and debris from your computer 25

Cleaning your computer with a disinfectant 26

Caring for wood veneer (select products only) 27
Packaging and transporting guidelines 27
Accessing support information 28
5 Removal and replacement procedures for authorized service provider parts 30
Component replacement procedures 30
Preparation for disassembly 30
Bottom cover 30
Battery 32
Solid-state drive 33
WLAN module 35
Speakers 36
Touchpad 37
Fans 39
Heat sink 40
IR board 42
System board and heat sink combination 43
Display assembly 46
Top cover with keyboard 56
6 Using Setup Utility (BIOS) 57
Starting Setup Utility (BIOS) 57
Updating Setup Utility (BIOS) 57
Determining the BIOS version 57
Preparing for a BIOS update 58
Downloading a BIOS update 58
Installing a BIOS update 58
7 Using HP PC Hardware Diagnostics 60
Using HP PC Hardware Diagnostics Windows (select products only) 60
Using an HP PC Hardware Diagnostics Windows hardware failure ID code 60
Accessing HP PC Hardware Diagnostics Windows 60
Accessing HP PC Hardware Diagnostics Windows from HP Support Assistant 60
Accessing HP PC Hardware Diagnostics Windows from the Start menu (select products only) 61
Downloading HP PC Hardware Diagnostics Windows 61
Downloading the latest HP PC Hardware Diagnostics Windows version from HP 61
Downloading the HP PC Hardware Diagnostics Windows from the Microsoft Store 61
Downloading HP Hardware Diagnostics Windows by product name or number (select products only) 61
Installing HP PC Hardware Diagnostics Windows 62
Using HP PC Hardware Diagnostics UEFI 62
Using an HP PC Hardware Diagnostics UEFI hardware failure ID code 62
Starting HP PC Hardware Diagnostics UEFI 62
Starting HP PC Hardware Diagnostics UEFI through HP Hotkey Support software (select products only) 63
Downloading HP PC Hardware Diagnostics UEFI to a USB flash drive 63
Downloading the latest HP PC Hardware Diagnostics UEFI version 63

Downloading HP PC Hardware Diagnostics UEFI by product name or number (select products only) ... 64
Using Remote HP PC Hardware Diagnostics UEFI settings (select products only) ... 64
Downloading Remote HP PC Hardware Diagnostics UEFI ... 64
Downloading the latest Remote HP PC Hardware Diagnostics UEFI version ... 64
Downloading Remote HP PC Hardware Diagnostics UEFI by product name or number ... 64
Customizing Remote HP PC Hardware Diagnostics UEFI settings ... 65
8 Backing up, restoring, and recovering ... 66
Backing up information and creating recovery media ... 66
Using Windows tools for backing up ... 66
Using the HP Cloud Recovery Download Tool to create recovery media (select products only) ... 66
Restoring and recovering your system ... 66
Creating a system restore ... 67
Restoring and recovery methods ... 67
Recovering using HP Recovery media ... 67
Changing the computer boot order ... 68
Using HP Sure Recover (select products only) ... 68
9 Specifications ... 69
Computer specifications ... 69
Display specifications ... 69
Solid-state drive specifications ... 70
10 Power cord set requirements ... 71
Requirements for all countries ... 71
Requirements for specific countries and regions ... 71
11 Recycling ... 73
Index ... 74

1 Product description

This table provides detailed product information.

Table 1-1 Product components and their descriptions

Category	Description
Product Name	**HP ENVY x360 15.6 inch 2-in-1 Laptop PC**
	Model number: 15-fh0xxx
	CTO model: 15z-fh000
Processor	**AMD® processors**
	AMD Ryzen™ 7 7730U processor (up to 4.5 GHz, 16 MB L3 cache, 8 cores)
	AMD Ryzen 5 7530U processor (up to 4.5 GHz, 16 MB L3 cache, 6 cores)
Graphics controller	**AMD Radeon® Graphics**
	Supports HD decode, DX12, and HDMI®
	Supports FreeSync™ (internal and external)
	MR compatible (60 Hz frame rate)
	MR certified (90 Hz frame rate)
	Supports VR
Display	**39.6 cm (15.6 in), touch screen**
	• Full high definition (FHD) (1920 × 1080), white light-emitting diode (WLED), antiglare, ultrawide viewing angle (UWVA), 45% NTSC, eDP 1.2 without panel self-refresh (PSR), 250 nits
	• FHD, organic light-emitting diode (OLED), BrightView, eDP 1.4 + PSR, UWVA, 100% DCI-P3, low blue light, 400 nits
	Anti-reflection
	Anti-smudge
	EyeSafe Label
	Flicker free
	Supports IMAX Enhanced
	Supports active stylus
	Supports Edge Luminance Profile (ELP)
	Touch solution with flush glass, multitouch enabled
	Supports simultaneous pen and touch
	Microsoft® HDR streaming capable

Table 1-1 Product components and their descriptions (continued)

Category	Description
Memory	Onboard memory supporting up to 16 GB of RAM (not accessible or upgradeable)
	LPDDR4x-4266, dual channel support
	Supports the following configurations:
	• 16 GB
	• 8 GB
Primary storage	**Solid-state drives, PCIe®, NVMe®**
	1 TB
	512 GB, PCIe-3 × 4, three layer cell (TLC)
	512 GB
	256 GB
Audio	Dual speakers
	BANG and OLUFSEN
	myHP Audio Control
	Supports Far Field Cortana
	Supports Alexa
	Supports DTS_X Ultra
	HP Audio Boost 2.0
	Supports speaker swap
Video	HP Wide Vision 5 MP camera - indicator LED, USB 2.0, infrared (IR) LED, 5 MP BSI sensor, f2.0, 88° wide field-of-view (WFOV)
	5 MP by 30 frames per second (fps)
	Supports Windows Hello
	Dual-array, digital microphone with appropriate beamforming software, echo cancellation, noise suppression
Wireless	**Wireless Local Area Network (WLAN)**
	• Realtek® 8852CE Wi-Fi® 6E Bluetooth® 5.3 WLAN
	• MediaTek™ RZ616 Wi-Fi 6E Bluetooth® 5.3 AIM-T WLAN
	Support for Miracast®
	Turbo Lite WLAN SVTP
	Supports Modern Standby (connected)
	Intel BT Audio Offload
	Wi-Fi BIOS SAR
	Dynamic Antenna Gain
	WLAN Time Average SAR

Table 1-1 Product components and their descriptions (continued)

Category	Description
Ports	Audio-out (headphone)/audio-in (microphone) combo jack
	HDMI v2.1 output up to 4K @ 60 Hz with HDCP 2.3
	USB 3.2 Gen 2 Type-A ports (2), right and left sides, supporting:
	- HP Sleep & Charge
	USB 3.2 Type-C® Gen 2 ports (2), right side, supporting:
	- HP Sleep & Charge
	- Power delivery 3.0
	- Data transfer
	- Type-C adapter
	- DisplayPort 1.4 + HDCP 2.3 output
Keyboard/pointing devices	**Full-size keyboard, island style, backlit**
	Nightfall black
	Soft gray
	Touch requirements
	Clickpad with image sensor
	Precision touchpad supported
	Taps enabled as default
Power requirements	**Battery**
	4 cell, 55 Whr
	Long life
	Fast charge
	HP USB-C® AC adapter
	65 W
	Power cord
	C5, premium, 1.0 m (3.3 ft)
Multimedia card	**HP Multi-Format Digital Media Card Reader**
	Supports SD™/SDHC™/SDXC™
	Push-push insertion and removal
Digital pen	HP MPP 2 G1 Tilt Pen (natural silver)
	HP MPP 2 G1 Tilt Pen (nightfall black)
Security	Microphone mute (on/off key on keyboard)
	Camera privacy cover
	Trusted Platform Module (TPM) 2.0, firmware
	TPM 2.0, discrete

Table 1-1 Product components and their descriptions (continued)

Category	Description
Sensors	Accelerometer x2
	Gyroscope/eCompass/Accelerometer + Magnetometer
	IR thermal sensor
	Sensor hub
Operating system	Windows® 11 Pro
	Windows 11 Pro Education
	Windows 11 Home - HP recommends Windows 11 Pro for Business
	Windows 11 Home Single Language - HP recommends Windows 11 Pro for Business
	Windows 11 Pro (Windows 11 Enterprise or Windows 10 Enterprise available with a Volume Licensing Agreement)
	Windows 11 Pro (preinstalled with Windows 10 Pro Downgrade)
	FreeDOS
Serviceability	AC adapter

2 Getting to know your computer

Your computer features top-rated components. This chapter provides details about your components, where they are located, and how they work.

Right side

Identify the components on the right side of the computer. Choose the illustration and table below that most closely match your computer.

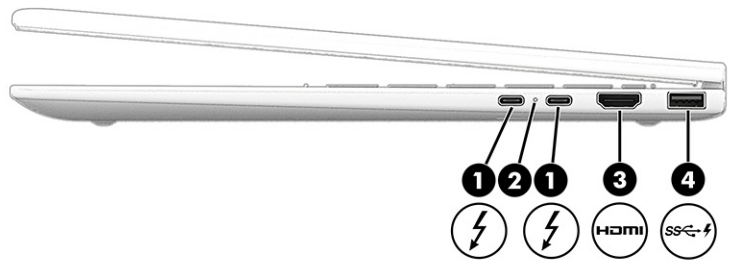

Table 2-1 Right-side components and their descriptions

Component		Description
(1)	USB Type-C® power connector and Thunderbolt™ ports with HP Sleep and Charge (2)	Connect an AC adapter that has a USB Type-C connector, supplying power to the computer and, if needed, charging the computer battery. – and – Connect a USB device, provide high-speed data transfer, and charge small devices (such as a smartphone), even when the computer is off. NOTE: Use a standard USB Type-C charging cable or cable adapter (purchased separately) when charging a small external device. NOTE: Your computer might also support a Thunderbolt docking station.
(2)	AC adapter and battery light	• White: The AC adapter is connected and the battery is fully charged. • Blinking amber: The AC adapter is disconnected and the battery has reached a low battery level. • Amber: The AC adapter is connected and the battery is charging. • Off: The battery is not charging.
(3)	HDMI® port	Connects an optional video or audio device, such as a high-definition television, any compatible digital or audio component, or a high-speed High-Definition Multimedia Interface® (HDMI) device.

Table 2-1 Right-side components and their descriptions (continued)

Component		Description
(4)	USB SuperSpeed 10 Gbps port with HP Sleep and Charge	Connects a USB device, provides high-speed data transfer, and charges small devices (such as a smartphone), even when the computer is off. NOTE: Use a standard USB Type-A charging cable or cable adapter (purchased separately) when charging a small external device.

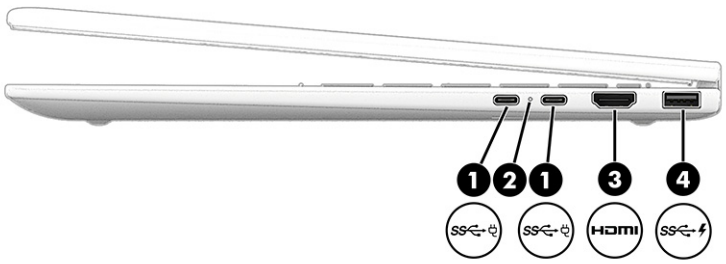

Table 2-2 Right-side components and their descriptions

Component		Description
(1)	USB Type-C power connector and SuperSpeed 10 Gbps port with HP Sleep and Charge (2)	Connect an AC adapter that has a USB Type-C connector, supplying power to the computer and, if needed, charging the computer battery. – and – Connect a USB device, provide high-speed data transfer, and charge small devices (such as a smartphone), even when the computer is off. NOTE: Use a standard USB Type-C charging cable or cable adapter (purchased separately) when charging a small external device.
(2)	AC adapter and battery light	• White: The AC adapter is connected and the battery is fully charged. • Blinking amber: The AC adapter is disconnected and the battery has reached a low battery level. • Amber: The AC adapter is connected and the battery is charging. • Off: The battery is not charging.
(3)	HDMI port	Connects an optional video or audio device, such as a high-definition television, any compatible digital or audio component, or a high-speed High-Definition Multimedia Interface (HDMI) device.
(4)	USB SuperSpeed 10 Gbps port with HP Sleep and Charge	Connects a USB device, provides high-speed data transfer, and charges small devices (such as a smartphone), even when the computer is off. NOTE: Use a standard USB Type-A charging cable or cable adapter (purchased separately) when charging a small external device.

Left side

Identify the components on the left side of the computer.

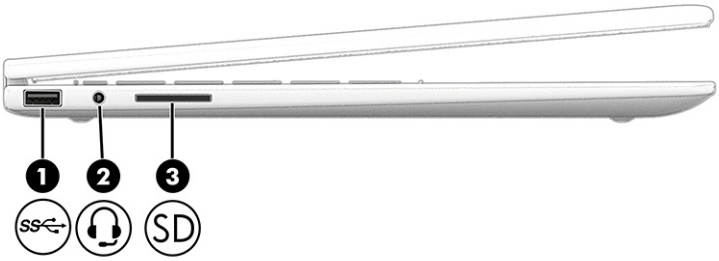

Table 2-3 **Left-side components and their descriptions**

Component		Description
(1)	USB SuperSpeed 10 Gbps port	Connects a USB device, provides high-speed data transfer, and (for select products) charges small devices (such as a smartphone) when the computer is on or in Sleep mode. NOTE: Use a standard USB Type-A charging cable or cable adapter (purchased separately) when charging a small external device.
(2)	Audio-out (headphone)/Audio-in (microphone) combo jack	Connects optional powered stereo speakers, headphones, earbuds, a headset, or a television audio cable. Also connects an optional headset microphone. This jack does not support optional standalone microphones. WARNING! To reduce the risk of personal injury, adjust the volume before putting on headphones, earbuds, or a headset. For additional safety information, see the *Regulatory, Safety, and Environmental Notices*. To access this guide: ■ Select the **Search** icon in the taskbar, type `HP Documentation` in the search box, and then select **HP Documentation**. NOTE: When a device is connected to the jack, the computer speakers are disabled.
(3)	Memory card reader	Reads optional memory cards that enable you to store, manage, share, or access information. To insert a card: 1. Hold the card label-side up, with connectors facing the computer. 2. Insert the card into the memory card reader, and then press in on the card until it is firmly seated. To remove a card: ■ Press in on the card, and then remove it from the memory card reader.

Display

The computer display can include essential components such as speakers, antennas, cameras, and microphones.

Low blue light mode (select products only)

Your computer display is shipped from the factory in low blue light mode for improved eye comfort and safety. Also, blue light mode automatically adjusts blue light emissions when you are using the computer at night or for reading.

⚠ **WARNING!** To reduce the risk of serious injury, read the *Safety & Comfort Guide*. It describes proper workstation setup and proper posture, health, and work habits for computer users. The *Safety & Comfort Guide* also provides important electrical and mechanical safety information. The *Safety & Comfort Guide* is available on the web at http://www.hp.com/ergo.

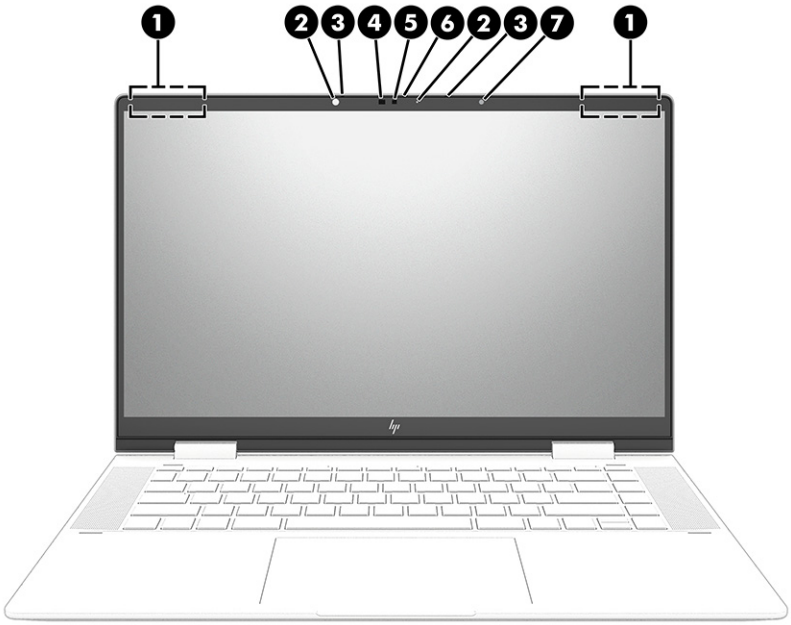

Table 2-4 Display components and their descriptions

Component		Description
(1)	WLAN antennas*	Send and receive wireless signals to communicate with wireless local area networks (WLANs).
(2)	Camera lights (2)	On: One or more cameras are in use.
(3)	Internal microphones (2)	Record sound.
(4)	Infrared camera	Allows you to video chat, record video, and record still images. Some cameras also allow a facial recognition logon to Windows®, instead of a password logon. **NOTE:** Camera functions vary depending on the camera hardware and software installed on your product.

Table 2-4 **Display components and their descriptions (continued)**

Component		Description
(5)	Camera	Allows you to video chat, record video, and record still images. Some cameras also allow a facial recognition logon to Windows, instead of a password logon. NOTE: Camera functions vary depending on the camera hardware and software installed on your product.
(6)	Camera privacy cover	By default, the camera lens is uncovered, but you can slide the camera privacy cover to block the camera's view. To use the camera, slide the camera privacy cover in the opposite direction to reveal the lens. NOTE: If you have both front-facing and rear-facing cameras, when one camera lens is revealed and ready to use, the other is concealed.
(7)	Ambient light sensor (select products only)	Determines ambient light conditions for use with your cameras.

*The antennas are not visible from the outside of the computer. For optimal transmission, keep the areas immediately around the antennas free from obstructions.

For wireless regulatory notices, see the section of the *Regulatory, Safety, and Environmental Notices* that applies to your country or region.

To access this guide:

- Select the **Search** icon in the taskbar, type `HP Documentation` in the search box, and then select **HP Documentation**.

Keyboard area

Keyboards can vary by language.

NOTE: The keyboard area, including the function keys and (select products only) power key, is disabled in stand, tent, and tablet modes. To enable the keyboard, including the power key, change to the clamshell mode.

Touchpad settings and components

Learn the touchpad settings and components.

Touchpad settings

Learn how to adjust touchpad settings.

Adjusting touchpad settings

Use these steps to adjust touchpad settings and gestures.

1. Select the **Search** icon in the taskbar, type `touchpad settings` in the search box, and then press enter.
2. Choose a setting.

Turning on the touchpad

Follow these steps to turn on the touchpad.

1. Select the **Search** icon in the taskbar, type `touchpad settings` in the search box, and then press enter.
2. Using an external mouse, click the **touchpad** button.

   If you are not using an external mouse, press the Tab key repeatedly until the pointer rests on the **touchpad** button. Then press the spacebar to select the button.

Touchpad components

Identify the touchpad components.

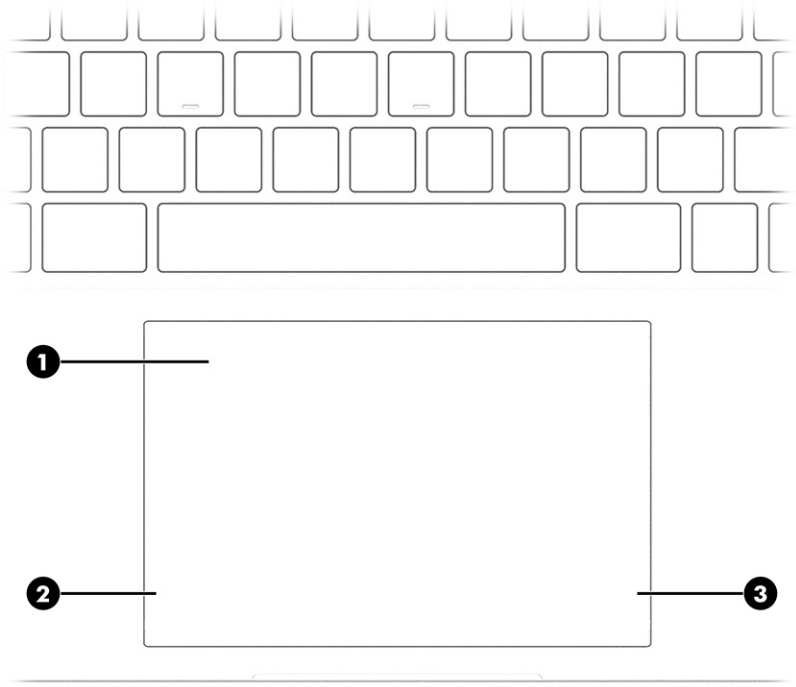

Table 2-5 **Touchpad components and their descriptions**

Component		Description
(1)	Touchpad zone	Reads your finger gestures to move the pointer or activate items on the screen.
(2)	Left touchpad button	Functions like the left button on an external mouse.
(3)	Right touchpad button	Functions like the right button on an external mouse.

Lights

Identify the lights on the computer.

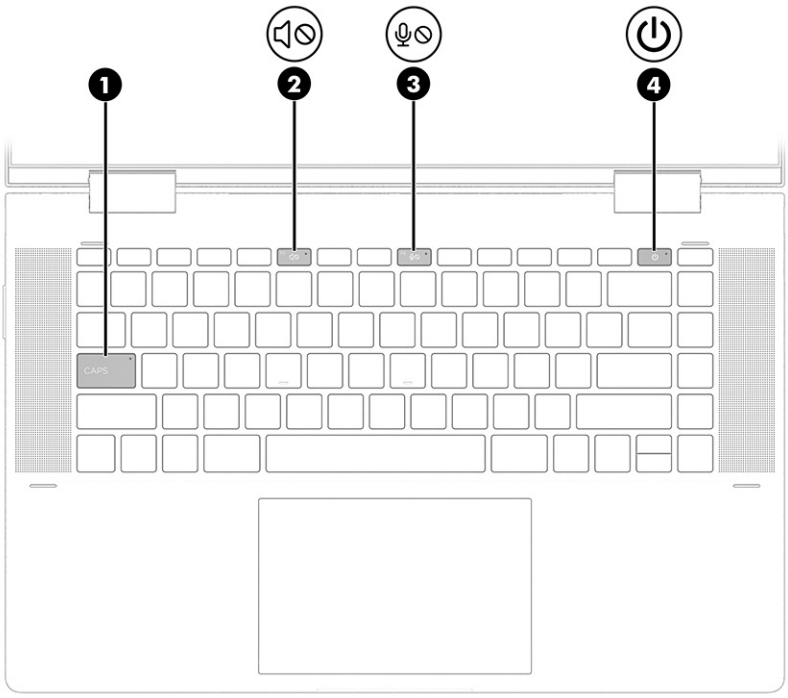

Table 2-6 Lights and their descriptions

Component			Description
(1)		Caps lock light	On: Caps lock is on, which switches the key input to all capital letters.
(2)		Mute light	• On: Computer sound is off. • Off: Computer sound is on.
(3)		Microphone mute light	• On: Microphone is off. • Off: Microphone is on.
(4)		Power light	• On: The computer is on. • Blinking (select products only): The computer is in the Sleep state, a power-saving state. The computer shuts off power to the display and other unnecessary components. • Off: Depending on your computer model, the computer is off, in Hibernation, or in Sleep. Hibernation is the power-saving state that uses the least amount of power.

Special keys

Identify the special keys.

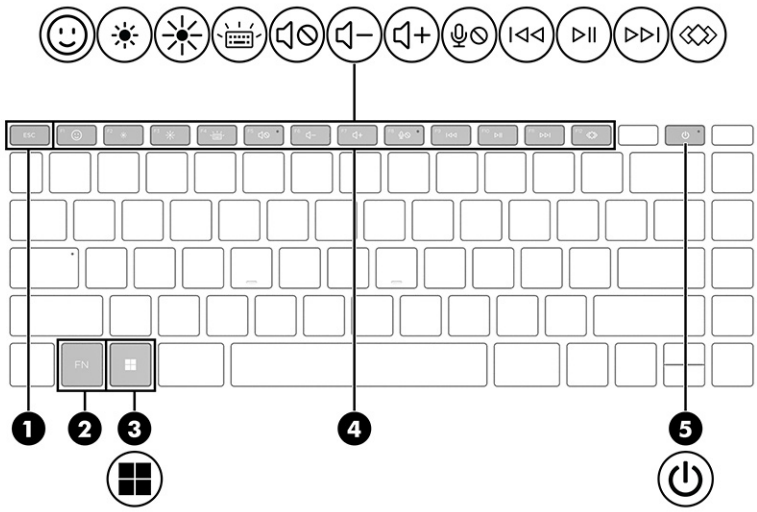

Table 2-7 Special keys and their descriptions

Component			Description
(1)		esc key	Displays system information when pressed in combination with the fn key.
(2)		fn key	Executes specific functions when pressed in combination with another key.
(3)		Windows key	Opens the Start menu. NOTE: Pressing the Windows key again will close the Start menu.
(4)		Action keys	Execute frequently used system functions as defined by the icon symbols on f1 through f12 function keys.
(5)		Power key	• When the computer is off, press the button briefly to turn on the computer. • When the computer is on, press the button briefly to initiate Sleep. • When the computer is in the Sleep state, press the button briefly to exit Sleep (select products only). • When the computer is in Hibernation, press the button briefly to exit Hibernation. IMPORTANT: Pressing and holding down the power key results in the loss of unsaved information. If the computer has stopped responding and shutdown procedures are ineffective, press and hold the power key down for at least 10 seconds to turn off the computer. To learn more about your power and sleep settings: ■ Right-click the **Power** icon, and then select **Power and sleep settings**.

Bottom

Identify the bottom components.

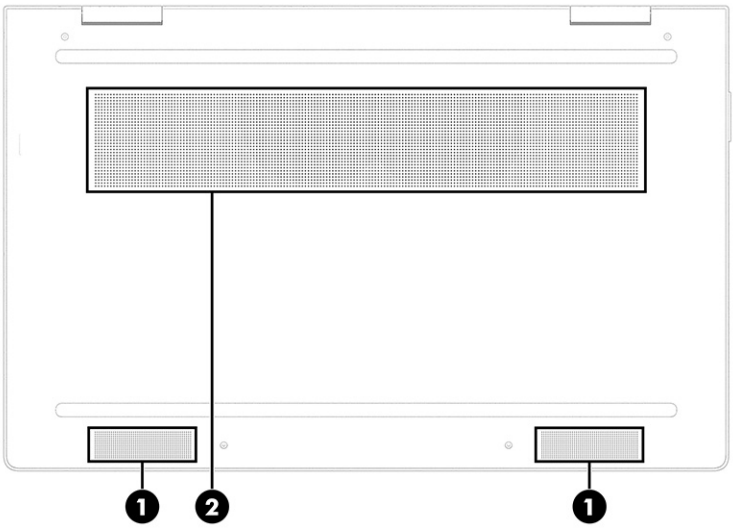

Table 2-8 Bottom components and their descriptions

Component		Description
(1)	Speakers	Produce sound.
(2)	Vent	Enables airflow to cool internal components. NOTE: The computer fan starts up automatically to cool internal components and prevent overheating. It is normal for the internal fan to cycle on and off during routine operation.

Rear

Use the illustration and table to identify the rear components.



Table 2-9 Rear components and their descriptions

Component	Description
Vent	Enables airflow to cool internal components. NOTE: The computer fan starts up automatically to cool internal components and prevent overheating. It is normal for the internal fan to cycle on and off during routine operation.

Labels

The labels affixed to the computer provide information that you might need when you troubleshoot system problems or travel internationally with the computer. Labels can be in paper form or imprinted on the product.

IMPORTANT: Check the following locations for the labels described in this section: the bottom of the computer, inside the battery bay, under the service door, on the back of the display, or on the bottom of a tablet kickstand.

- Service label—Provides important information to identify your computer. When contacting support, you might be asked for the serial number, the product number, or the model number. Locate this information before you contact support.

  Your service label will resemble one of the following examples. Refer to the illustration that most closely matches the service label on your computer.



Table 2-10 Service label components

Component	
(1)	Serial number
(2)	Product ID
(3)	HP product name and model number

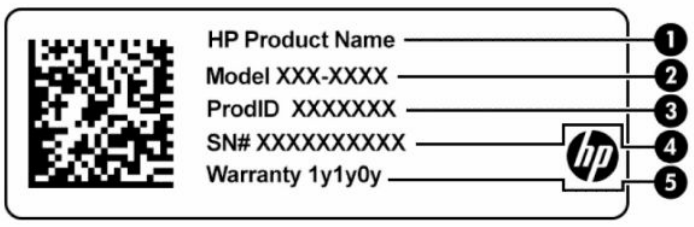

Table 2-11 Service label components

Component	
(1)	HP product name
(2)	Model number
(3)	Product ID
(4)	Serial number
(5)	Warranty period

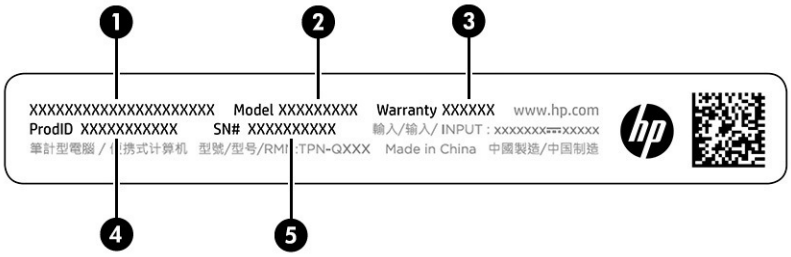

Table 2-12 Service label components

Component	
(1)	HP product name
(2)	Model number
(3)	Warranty period
(4)	Product ID
(5)	Serial number

- Regulatory labels—Provide regulatory information about the computer.
- Wireless certification labels—Provide information about optional wireless devices and the approval markings for the countries or regions in which the devices have been approved for use.

3 Illustrated parts catalog

Use this chapter to determine the spare parts that are available for the computer.

Computer major components

To identify the computer major components, use this illustration and table.

NOTE: HP continually improves and changes product parts. For complete and current information about supported parts for your computer, go to http://partsurfer.hp.com, select your country or region, and then follow the on-screen instructions.

NOTE: Details about your computer, including model, serial number, product key, and length of warranty, are on the service tag at the bottom of your computer.

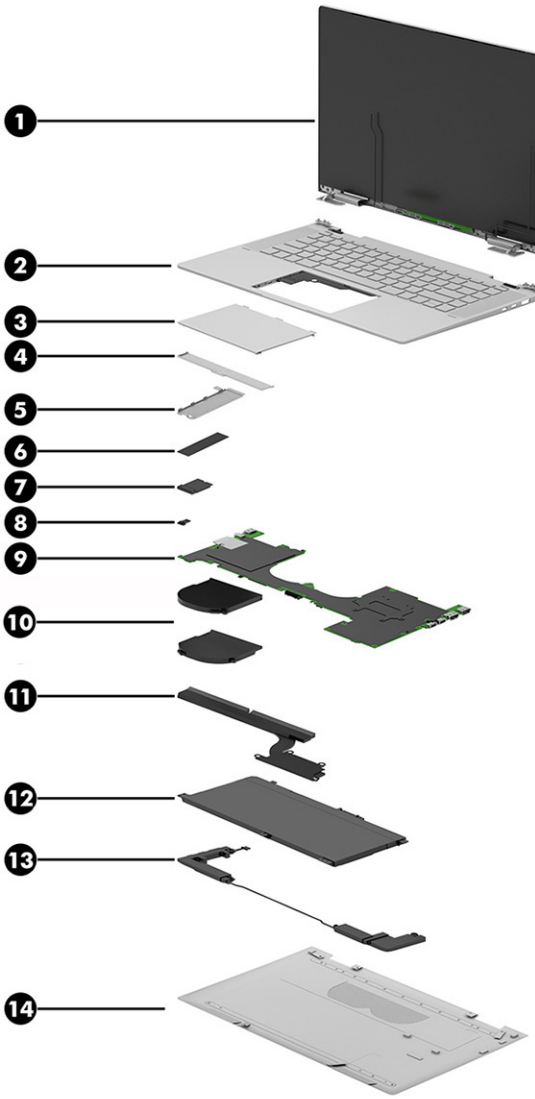

Table 3-1 Computer major component descriptions and part numbers

Item	Component	Spare part number
(1)	**Display assembly** **NOTE:** Display spare parts are available only as subcomponents. For spare part information, see Display assembly subcomponents on page 18.	
(2)	**Top cover with keyboard** **NOTE:** For a detailed list of country codes, see Top cover with keyboard on page 56.	
	Natural silver **NOTE:** Available only in the United States (-001) and French Canada (-DB1).	N47952-xxx
	Nightfall black	N47953-xxx
(3)	**Touchpad** **NOTE:** The touchpad cable is available as spare part number N47941-001.	
	Natural silver	N47938-001
	Nightfall black	N47939-001
(4)	**Touchpad bracket**	not available as a spare part
(5)	**Bottom solid-state drive bracket**	N48227-001
(6)	**Solid-state drive** (M.2 2280) **NOTE:** The solid-state drive thermal pad is available as spare part number N47944-001. The solid-state drive bracket is available as spare part number N48227-001.	
	1 TB	L85370-005
	512 GB	L85364-005
	512 GB, PCIe-4 × 4, TLC	M17436-005
	256 GB, PCIe-4 × 4	N04489-005
(7)	**WLAN module** **NOTE:** The WLAN module Mylar kit is available as spare part number N10779-001.	
	Realtek 8852CE Wi-Fi 6E Bluetooth 5.3 WLAN	N19618-005
	MediaTek RZ616 Wi-Fi 6E Bluetooth 5.3 AIM-T WLAN	N22541-005
(8)	**IR board** **NOTE:** The IR board cable is available as spare part number N47940-001.	N47937-001
(9)	**System board**	
	AMD Ryzen 7 7730U processor and 16 GB of system memory	N47923-601
	AMD Ryzen 5 7530U processor and 16 GB of system memory	N47922-601
	AMD Ryzen 5 7530U processor and 8 GB of system memory	N47921-601
(10)	**Fans** (processor and graphics)	N47948-001
(11)	**Heat sink** **NOTE:** The thermal pad is available using spare part number N49812-001.	N47946-001

Table 3-1 Computer major component descriptions and part numbers (continued)

Item	Component	Spare part number
(12)	**Battery** (4 cell, 55 Whr)	N55629-005
(13)	**Speakers**	N47947-001
(14)	**Bottom cover**	
	Natural silver	N47942-001
	Nightfall black	N47943-001

Display assembly subcomponents

To identify the display assembly subcomponents, use this illustration and table.

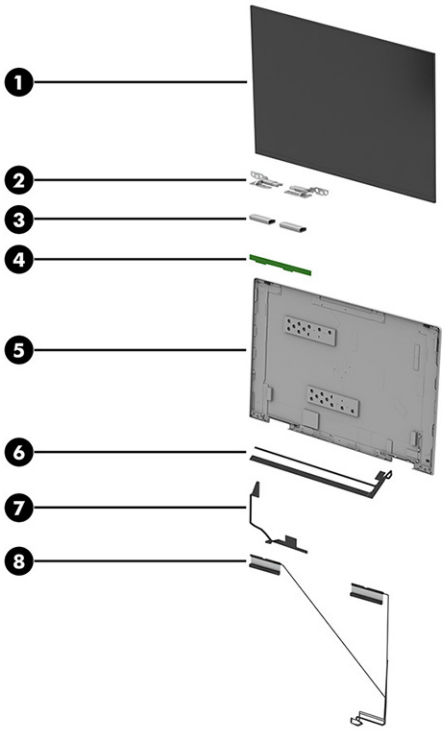

Table 3-2 Display component descriptions and part numbers

Item	Component	Spare part number
(1)	**Display panel** (touch screen) NOTE: Display panel adhesive is available as spare part number N49203-001.	
	FHD, antiglare, 250 nits, natural silver	N47924-001
	OLED, BrightView, 400 nits, natural silver	N47925-001
	FHD, antiglare, 250 nits, nightfall black	N48155-001
	OLED, BrightView, 400 nits, nightfall black	N48156-001

Table 3-2 Display component descriptions and part numbers (continued)

Item	Component	Spare part number
(2)	**Display hinges** (includes left and right hinges and display panel stretchable tape)	N47931-001
(3)	**Display hinge covers** (includes left and right covers)	
	Natural silver	N47933-001
	Nightfall black	N48225-001
(4)	**Camera module**	N47935-001
(5)	**Display back cover** (includes antennas)	
	QHD/FHD, natural silver	N47927-001
	QHD/FHD, nightfall black	N47928-001
	OLED, natural silver	N47929-001
	OLED, nightfall black	N47930-001
(6)	**Camera cable**	N47932-001
(7)	**Display cable**	
	FHD displays	N47936-001
	OLED displays	N48228-001
(8)	**Wireless antenna kit (QHD/FHD)** (includes antenna cables and transceivers)	N47950-001
*	**Display panel adhesive strips**	N49203-001
*	**OLED board**	N47926-001
*	**OLED antenna kit**	N47951-001
*	**OLED thermal pad**	N48226-001
*	**Touch control board**	N48231-001

*not illustrated

Miscellaneous parts

To identify the miscellaneous parts, use this table.

Table 3-3 Miscellaneous part descriptions and part numbers

Component	Spare part number
65 W USB-C AC adapter (nPFC)	M54350-001
USB External DVD±RW drive	747080-001
HDMI-to-VGA adapter	701943-001
USB-C-to-USB 3.0 adapter	814618-001
USB-C-to-RJ-45 adapter	M95985-001
USB-C-to-VGA adapter	831751-001
USB-C-to-USB-A adapter	916838-001

Table 3-3 Miscellaneous part descriptions and part numbers (continued)

Component	Spare part number
USB-C-to-HDMI 2.0 adapter	935325-001
HP Elite USB-C MultiPort Hub	L39572-001
HP Creator 16.1 inch backpack	N24321-001
Backpack, 15.6 inch, 18 L	N20930-001
HP MPP 2 G1 Tilt Pen (natural silver)	N44378-001
HP MPP 2 G1 Tilt Pen (nightfall black)	N54711-001
Display panel adhesive kit (includes left and right adhesive strips)	N49203-001
WLAN Mylar	N10779-001
Misc Mylar Kit (includes antenna cable rubber, connector Mylar, heat pipe Mylar, EMI conductive tape)	N47945-001
Screw Kit	N47934-001
Duck head adapter (for use in Japan)	L33157-001
Power cord (C5, 1.0 m [3.3 ft], premium, straight)	
For use in Australia	L22327-001
For use in Denmark	L22322-001
For use in Europe	L22321-001
For use in India	L22624-001
For use in Italy	L30813-001
For use in Israel	L22323-001
For use in Japan	L22330-001
For use in North America	L22319-001
For use in South Africa	L22325-001
For use in Switzerland	L22324-001
For use in the United Kingdom	L22320-001

4 Removal and replacement procedures preliminary requirements

Use this information to properly prepare to disassemble and reassemble the computer.

Tools required

You need the following tools to complete the removal and replacement procedures:

- Suction cup
- Tweezers
- Nonconductive, nonmarking pry tool
- Magnetic Phillips P1 screwdriver

Service considerations

The following sections include some of the considerations that you must keep in mind during disassembly and assembly procedures.

NOTE: As you remove each subassembly from the computer, place the subassembly (and all accompanying screws) away from the work area to prevent damage.

Plastic parts

Using excessive force during disassembly and reassembly can damage plastic parts.

Cables and connectors

Handle cables with extreme care to avoid damage.

IMPORTANT: When servicing the computer, be sure that cables are placed in their proper locations during the reassembly process. Improper cable placement can damage the computer.

Apply only the tension required to unseat or seat the cables during removal and insertion. Handle cables by the connector whenever possible. In all cases, avoid bending, twisting, or tearing cables. Be sure that cables are routed so that they cannot be caught or snagged as you remove or replace parts. Handle flex cables with extreme care; these cables tear easily.

Drive handling

Note the following guidelines when handling drives.

IMPORTANT: Drives are fragile components. Handle them with care. To prevent damage to the computer, damage to a drive, or loss of information, observe these precautions:

- Before removing or inserting a hard drive, shut down the computer. If you are unsure whether the computer is off or in Hibernation, turn the computer on, and then shut it down through the operating system.
- Before handling a drive, be sure that you are discharged of static electricity. While handling a drive, avoid touching the connector.
- Before removing an optical drive, be sure that a disc is not in the drive, and be sure that the optical drive tray is closed.
- Handle drives on surfaces covered with at least 2.54 cm (1 inch) of shock-proof foam.
- Avoid dropping drives from any height onto any surface.
- After removing a hard drive or an optical drive, place it in a static-proof bag.
- Avoid exposing an internal hard drive to products that have magnetic fields, such as monitors or speakers.
- Avoid exposing a drive to temperature extremes or liquids.
- If a drive must be mailed, place the drive in a bubble pack mailer or other suitable form of protective packaging, and label the package “FRAGILE.”

Electrostatic discharge information

A sudden discharge of static electricity from your finger or other conductor can destroy static-sensitive devices or microcircuitry. Often the spark is neither felt nor heard, but damage occurs. An electronic device exposed to electrostatic discharge (ESD) might not appear to be affected at all and can work perfectly throughout a normal cycle. The device might function normally for a while, but it has been degraded in the internal layers, reducing its life expectancy.

Networks built into many integrated circuits provide some protection, but in many cases, the discharge contains enough power to alter device parameters or melt silicon junctions.

IMPORTANT: To prevent damage to the device when you remove or install internal components, observe these precautions:

- Keep components in their electrostatic-safe containers until you are ready to install them.
- Before touching an electronic component, discharge static electricity by using the guidelines described in Personal grounding methods and equipment on page 23.
- Avoid touching pins, leads, and circuitry. Handle electronic components as little as possible.
- If you remove a component, place it in an electrostatic-safe container.

Generating static electricity

Follow these static electricity guidelines:

- Different activities generate different amounts of static electricity.
- Static electricity increases as humidity decreases.

Table 4-1 **Static electricity occurrence based on activity and humidity**

	Relative humidity		
Event	**55%**	**40%**	**10%**
Walking across carpet	7,500 V	15,000 V	35,000 V
Walking across vinyl floor	3,000 V	5,000 V	12,000 V
Motions of bench worker	400 V	800 V	6,000 V
Removing dual in-line packages (DIPs) from plastic tube	400 V	700 V	2,000 V
Removing DIPs from vinyl tray	2,000 V	4,000 V	11,500 V
Removing DIPs from polystyrene foam	3,500 V	5,000 V	14,500 V
Removing bubble pack from PCB (printed circuit board)	7,000 V	20,000 V	26,500 V
Packing PCBs in foam-lined box	5,000 V	11,000 V	21,000 V
Multiple electric components can be packaged together in plastic tubes, trays, or polystyrene foam.			

NOTE: As little as 700 V of static electricity can degrade a product.

Preventing electrostatic damage to equipment

Many electronic components are sensitive to ESD. Circuitry design and structure determine the degree of sensitivity.

The following packaging and grounding precautions are necessary to prevent static electricity damage to electronic components:

- To avoid hand contact, transport products in static-safe containers such as tubes, bags, or boxes.
- Protect all electrostatic parts and assemblies with conductive or approved containers or packaging.
- Keep electrostatic-sensitive parts in their containers until they arrive at static-free stations.
- Place items on a grounded surface before removing them from their container.
- Always be properly grounded when touching a sensitive component or assembly.
- Avoid contact with pins, leads, or circuitry.
- Place reusable electrostatic-sensitive parts from assemblies in protective packaging or conductive foam.

Personal grounding methods and equipment

Using certain equipment can prevent static electricity damage to electronic components.

- **Wrist straps** are flexible straps with a maximum of 1 MΩ ±10% resistance in the ground cords. To provide proper ground, a strap must be worn snug against bare skin. The ground cord must be connected and fit snugly into the banana plug connector on the grounding mat or workstation.
- You can use **heel straps, toe straps, and boot straps** at standing workstations. These straps are compatible with most types of shoes or boots. On conductive floors or dissipative floor mats, use them on both feet with a maximum of 1 MΩ ±10% resistance between the operator and ground.

Table 4-2 Static shielding protection levels

Static shielding protection levels	
Method	**Voltage**
Antistatic plastic	1,500
Carbon-loaded plastic	7,500
Metallized laminate	15,000

Grounding the work area

To prevent static damage at the work area, follow these precautions:

- Cover the work surface with approved static-dissipative material.
- Use a wrist strap connected to a properly grounded work surface and use properly grounded tools and equipment.
- Use static-dissipative mats, foot straps, or air ionizers to give added protection.
- Handle electrostatic sensitive components, parts, and assemblies by the case or PCB laminate. Handle them only at static-free work areas.
- Turn off power and input signals before inserting and removing connectors or test equipment.
- Use fixtures made of static-safe materials when fixtures must directly contact dissipative surfaces.
- Keep the work area free of nonconductive materials, such as ordinary plastic assembly aids and polystyrene foam.
- Use conductive field service tools, such as cutters, screwdrivers, and vacuums.
- Avoid contact with pins, leads, or circuitry.

Recommended materials and equipment

HP recommends certain materials and equipment to prevent static electricity:

- Antistatic tape
- Antistatic smocks, aprons, or sleeve protectors
- Conductive bins and other assembly or soldering aids
- Conductive foam
- Conductive tabletop workstations with ground cord of 1 MΩ ±10% resistance
- Static-dissipative table or floor mats with hard tie to ground
- Field service kits
- Static awareness labels
- Wrist straps and footwear straps providing 1 MΩ ±10% resistance
- Material handling packages

- Conductive plastic bags
- Conductive plastic tubes
- Conductive tote boxes
- Opaque shielding bags
- Transparent metallized shielding bags
- Transparent shielding tubes

Cleaning your computer

Cleaning your computer regularly removes dirt and debris so that your device continues to operate at its best. Use the following information to safely clean the external surfaces of your computer.

Enabling HP Easy Clean (select products only)

HP Easy Clean helps you to avoid accidental input while you clean the computer surfaces. This software disables devices such as the keyboard, touch screen, and touchpad for a preset amount of time so that you can clean all computer surfaces.

1. Start HP Easy Clean in one of the following ways:
   - Select the **Start** menu, and then select **HP Easy Clean**.

     – or –

   - Select the **HP Easy Clean** icon in the taskbar.

     – or –

   - Select **Start**, and then select the **HP Easy Clean** tile.
2. Now that your device is disabled for a short period, see Removing dirt and debris from your computer on page 25 for the recommended steps to clean the high-touch, external surfaces on your computer. After you remove the dirt and debris, you can also clean the surfaces with a disinfectant. See Cleaning your computer with a disinfectant on page 26 for guidelines to help prevent the spread of harmful bacteria and viruses.

Removing dirt and debris from your computer

Here are the recommended steps to clean dirt and debris from your computer.

For computers with wood veneer, see Caring for wood veneer (select products only) on page 27.

1. Wear disposable gloves made of latex (or nitrile gloves, if you are latex-sensitive) when cleaning the surfaces.
2. Turn off your device and unplug the power cord and other connected external devices. Remove any installed batteries from items such as wireless keyboards.

⚠ **CAUTION:** To prevent electric shock or damage to components, never clean a product while it is turned on or plugged in.

3. Moisten a microfiber cloth with water. The cloth should be moist, but not dripping wet.

IMPORTANT: To avoid damaging the surface, avoid abrasive cloths, towels, and paper towels.

4. Wipe the exterior of the product gently with the moistened cloth.

IMPORTANT: Keep liquids away from the product. Avoid getting moisture in any openings. If liquid makes its way inside your HP product, it can cause damage to the product. Do not spray liquids directly on the product. Do not use aerosol sprays, solvents, abrasives, or cleaners containing hydrogen peroxide or bleach that might damage the finish.

5. Start with the display (if applicable). Wipe carefully in one direction, and move from the top of the display to the bottom. Finish with any flexible cables, like power cord, keyboard cable, and USB cables.

6. Be sure that surfaces have completely air-dried before turning the device on after cleaning.

7. Discard the gloves after each cleaning. Clean your hands immediately after you remove the gloves.

See Cleaning your computer with a disinfectant on page 26 for recommended steps to clean the high-touch, external surfaces on your computer to help prevent the spread of harmful bacteria and viruses.

Cleaning your computer with a disinfectant

The World Health Organization (WHO) recommends cleaning surfaces, followed by disinfection, as a best practice for preventing the spread of viral respiratory illnesses and harmful bacteria.

After cleaning the external surfaces of your computer using the steps in Removing dirt and debris from your computer on page 25, Caring for wood veneer (select products only) on page 27, or both, you might also choose to clean the surfaces with a disinfectant. A disinfectant that is within HP's cleaning guidelines is an alcohol solution consisting of 70% isopropyl alcohol and 30% water. This solution is also known as rubbing alcohol and is sold in most stores.

Follow these steps when disinfecting high-touch, external surfaces on your computer:

1. Wear disposable gloves made of latex (or nitrile gloves, if you are latex-sensitive) when cleaning the surfaces.

2. Turn off your device and unplug the power cord and other connected external devices. Remove any installed batteries from items such as wireless keyboards.

CAUTION: To prevent electric shock or damage to components, never clean a product while it is turned on or plugged in.

3. Moisten a microfiber cloth with a mixture of 70% isopropyl alcohol and 30% water. The cloth should be moist, but not dripping wet.

CAUTION: Do not use any of the following chemicals or any solutions that contain them, including spray-based surface cleaners: bleach, peroxides (including hydrogen peroxide), acetone, ammonia, ethyl alcohol, methylene chloride, or any petroleum-based materials, such as gasoline, paint thinner, benzene, or toluene.

IMPORTANT: To avoid damaging the surface, avoid abrasive cloths, towels, and paper towels.

4. Wipe the exterior of the product gently with the moistened cloth.

IMPORTANT: Keep liquids away from the product. Avoid getting moisture in any openings. If liquid makes its way inside your HP product, it can cause damage to the product. Do not spray liquids directly on the product. Do not use aerosol sprays, solvents, abrasives, or cleaners containing hydrogen peroxide or bleach that might damage the finish.

5. Start with the display (if applicable). Wipe carefully in one direction, and move from the top of the display to the bottom. Finish with any flexible cables, like power cord, keyboard cable, and USB cables.

6. Be sure that surfaces have completely air-dried before turning the device on after cleaning.

7. Discard the gloves after each cleaning. Clean your hands immediately after you remove the gloves.

Caring for wood veneer (select products only)

Your product might feature high-quality wood veneer. As with all natural wood products, proper care is important for best results over the life of the product. Because of the nature of natural wood, you might see unique variations in the grain pattern or subtle variations in color, which are normal.

- Clean the wood with a dry, static-free microfiber cloth or chamois.
- Avoid cleaning products containing substances such as ammonia, methylene chloride, acetone, turpentine, or other petroleum-based solvents.
- Do not expose the wood to sun or moisture for long periods of time.
- If the wood becomes wet, dry it by dabbing with an absorbent, lint-free cloth.
- Avoid contact with any substance that might dye or discolor the wood.
- Avoid contact with sharp objects or rough surfaces that might scratch the wood.

See Removing dirt and debris from your computer on page 25 for the recommended steps to clean the high-touch, external surfaces on your computer. After you remove the dirt and debris, you can also clean the surfaces with a disinfectant. See Cleaning your computer with a disinfectant on page 26 for sanitizing guidelines to help prevent the spread of harmful bacteria and viruses.

Packaging and transporting guidelines

Follow these grounding guidelines when packaging and transporting equipment:

- To avoid hand contact, transport products in static-safe tubes, bags, or boxes.
- Protect ESD-sensitive parts and assemblies with conductive or approved containers or packaging.
- Keep ESD-sensitive parts in their containers until the parts arrive at static-free workstations.
- Place items on a grounded surface before removing items from their containers.
- Always be properly grounded when touching a component or assembly.
- Store reusable ESD-sensitive parts from assemblies in protective packaging or nonconductive foam.

- Use transporters and conveyors made of antistatic belts and roller bushings. Be sure that mechanized equipment used for moving materials is wired to ground and that proper materials are selected to avoid static charging. When grounding is not possible, use an ionizer to dissipate electric charges.

Accessing support information

To find the HP support that you need, use this information.

Table 4-3 Support information locations

Service consideration	Path to access information
Records of reported failure incidents stored on the computer	**Windows®:** Preoperating system failures are logged in the BIOS Event Log. To view the BIOS Event Log: 1. Press the power button. 2. Immediately and repeatedly press esc when the power button light turns white. NOTE: If you do not press esc at the appropriate time, you must restart the computer and again repeatedly press esc when the power button light turns white to access the utility. 3. Press f10 to enter the BIOS setup. 4. (On commercial products) Under the **Main** tab, select **BIOS event log**, and then select **View BIOS Event Log**. - or - (On consumer products) Under the **Main** tab, select **System Log**. Post-operating system failures are logged in the Event Viewer. 1. Turn on the computer and allow the operating system to open. 2. Select the search icon  in the taskbar. 3. Type `Event Viewer`, and then press enter. 4. Select the log from the left panel. Details display in the right panel. **Chrome™:** 1. Go to support.google.com/chrome. 2. Search `collect Chrome device logs`.
Technical bulletins	To locate technical bulletins: 1. Go to www.hp.com. 2. Place the cursor over **Problem solving** to display more options. 3. Select **Support & Troubleshooting**. 4. Type the serial number, product number, or product name to go to the product support page. 5. Select **Advisories** to view technical bulletins.

Table 4-3 Support information locations (continued)

Service consideration	Path to access information
Repair professionals	To locate repair professionals: 1. Go to www.hp.com. 2. Place the cursor over **Support resources** to display more options. 3. Select **Authorized service providers**.
Component and diagnosis information, failure detection, and required action	To locate diagnosis information and actions: 1. Go to http://www.hp.com/go/techcenter/pcdiags. 2. Select **Get Support**. 3. Near the bottom of the window, select **Notebook PCs**, and then select your location.

5 Removal and replacement procedures for authorized service provider parts

This chapter provides removal and replacement procedures for authorized service provider parts.

IMPORTANT: Only an authorized service provider should access the components described in this chapter. Accessing these parts can damage the computer or void the warranty.

NOTE: Details about your computer, including model, serial number, product key, and length of warranty, are on the service tag at the bottom of your computer.

Component replacement procedures

To remove and replace computer components, use the procedures described in this section.

NOTE: HP continually improves and changes product parts. For complete and current information about supported parts for your computer, go to http://partsurfer.hp.com, select your country or region, and then follow the on-screen instructions.

Make special note of each screw size and location during removal and replacement.

Preparation for disassembly

To remove and replace computer components, use these procedures:

For initial safety procedures, see Removal and replacement procedures preliminary requirements on page 21.

1. Turn off the computer. If you are unsure whether the computer is off or in Hibernation, turn the computer on, and then shut it down through the operating system.
2. Disconnect the power from the computer by unplugging the power cord from the computer.
3. Disconnect all external devices from the computer.

Bottom cover

To remove the bottom cover, use this procedure and illustration.

Table 5-1 Bottom cover description and part number

Description	Spare part number
Natural silver	N47942-001
Nightfall black	N47943-001

Before removing the bottom cover, prepare the computer for disassembly (see Preparation for disassembly on page 30).

Remove the bottom cover:

1. Remove the top two Phillips M2.0 × 6.0 screws **(1)** that secure the bottom cover to the computer.
2. Remove the bottom two Phillips M2.0 × 3.0 screws **(2)** that secure the bottom cover to the computer.

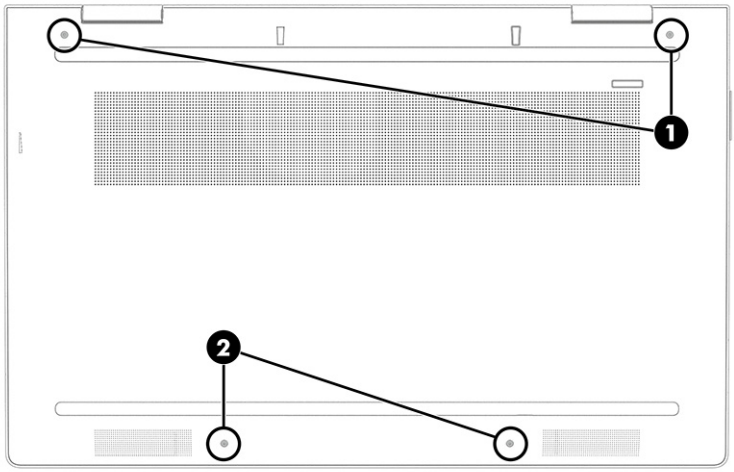

3. Open the computer to 90° and position it with the back of the display on the table.
4. While holding the computer with both hands, use your thumbs to press near both sides **(1)** of the touchpad. At the same time, use your fingers to press on the bottom of the computer **(2)** to release the bottom cover **(3)**.

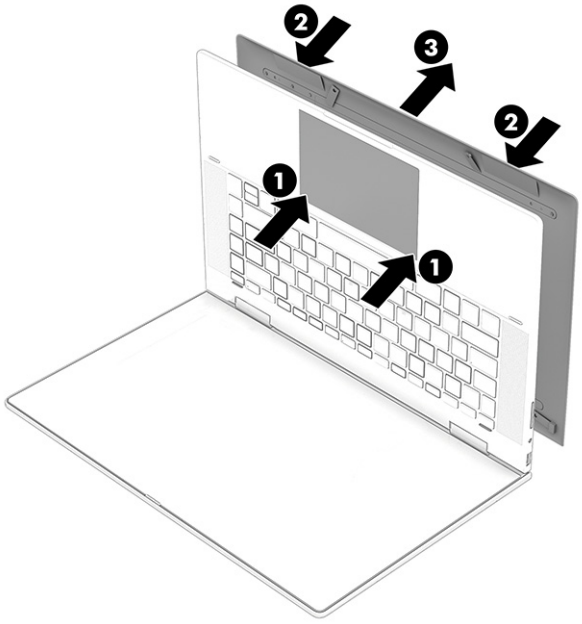

5. Close the computer and position it upside down.

6. Pull up on the top edge **(1)** of the bottom cover, and then remove the bottom cover from the computer **(2)**.

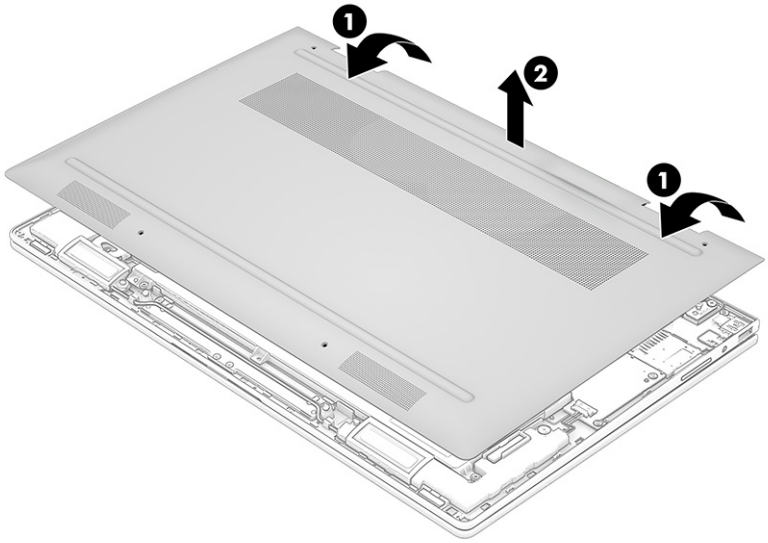

To replace the bottom cover, reverse the removal procedures.

Battery

To remove the battery, use this procedure and illustration.

Table 5-2 Battery description and part number

Description	Spare part number
Battery (4 cell, 55 Whr)	N55629-005

⚠ **WARNING!** To avoid personal injury and damage to the product:

- Do *not* puncture, twist, or crack the battery.
- Do *not* cause an external puncture or rupture to the battery. Punctures and ruptures can cause a short inside the battery, which can result in battery thermal runaway.
- Do *not* handle or touch the battery enclosure with sharp objects such as tweezers or pliers, which might puncture the battery.
- Do *not* compress or squeeze the battery case with tools or heavy objects stacked on top of the case. These actions can apply undue force on the battery.
- Do *not* touch the connectors with any metallic surface or object, such as metal tools, screws, or coins, which can cause shorting across the connectors.

Before removing the battery, follow these steps:

1. Prepare the computer for disassembly (see Preparation for disassembly on page 30).
2. Remove the bottom cover (see Bottom cover on page 30).

⚠ **WARNING!** To reduce potential safety issues, use only the user-replaceable battery provided with the computer, a replacement battery provided by HP, or a compatible battery purchased from HP.

IMPORTANT: Removing a battery that is the sole power source for the computer can cause loss of information. To prevent loss of information, save your work or shut down the computer through Windows before you remove the battery.

Remove the battery:

1. Remove the five Phillips M2.0 × 2.5 screws **(1)** that secure the battery to the computer.
2. Remove the battery **(2)**.

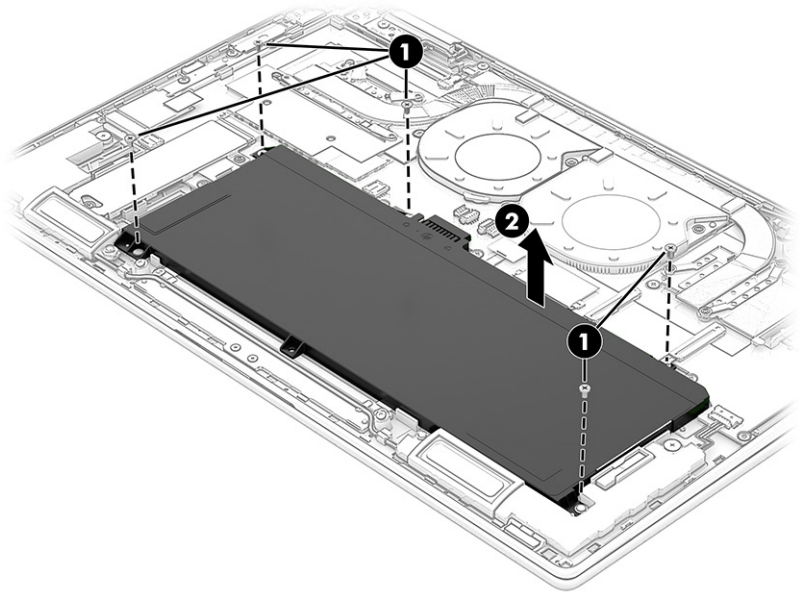

To install the battery, reverse the removal procedures.

Solid-state drive

To remove the solid-state drive, use this procedure and illustration.

Table 5-3 Solid-state drive descriptions and part numbers

Description	Spare part number
1 TB	L85370-005
512 GB	L85364-005
512 GB, PCIe-4 × 4, TLC	M17436-005
256 GB, PCIe-4 × 4	N04489-005
Bottom solid-state drive bracket	N48227-001
Solid-state drive thermal pad	N47944-001

Before removing the solid-state drive, follow these steps:

1. Prepare the computer for disassembly (see Preparation for disassembly on page 30).

2. Remove the bottom cover (see Bottom cover on page 30).
3. Remove the battery (see Battery on page 32).

Remove the solid-state drive:

1. Remove the two Phillips M2.0 × 3.0 screws **(1)** that secure the drive and bracket assembly, and then pull the assembly away from the socket to remove it **(2)**.

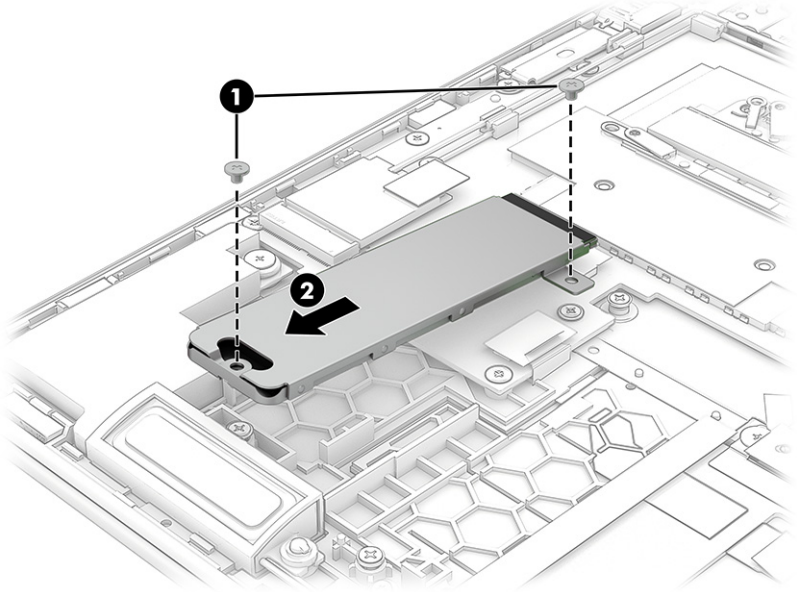

2. To separate the drive from the bracket, while holding the bottom bracket, pull the top bracket up **(1)** to release it. Remove the drive from the bottom bracket **(2)**.

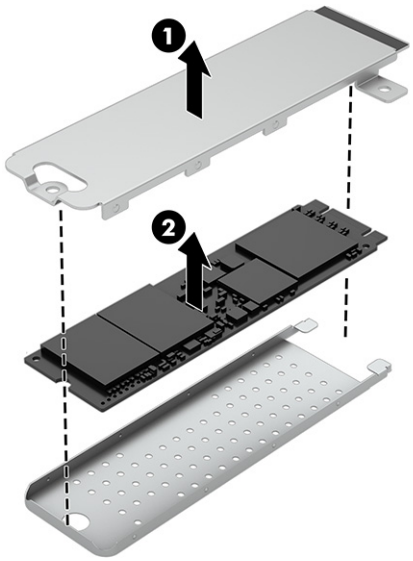

To install the solid-state drive, reverse the removal procedures.

When installing a solid-state drive, be sure the thermal pad is installed inside the top bracket

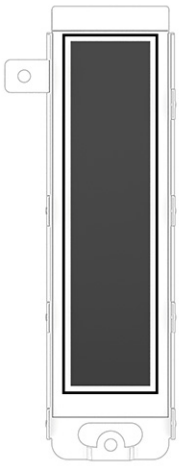

NOTE: Solid-state drives are designed with a notch to prevent incorrect insertion.

WLAN module

To remove the WLAN module, use this procedure and illustration.

Table 5-4 **WLAN module descriptions and part numbers**

Description	Spare part number
Realtek 8852CE Wi-Fi 6E Bluetooth 5.3 WLAN	N19618-005
MediaTek RZ616 Wi-Fi 6E Bluetooth 5.3 AIM-T WLAN	N22541-005
WLAN module Mylar kit	N10779-001

IMPORTANT: To prevent an unresponsive system, replace the wireless module only with a wireless module authorized for use in the computer by the governmental agency that regulates wireless devices in your country or region. If you replace the module and then receive a warning message, remove the module to restore device functionality, and then contact technical support.

Before removing the WLAN module, follow these steps:

1. Prepare the computer for disassembly (see Preparation for disassembly on page 30).
2. Remove the bottom cover (see Bottom cover on page 30).
3. Remove the battery (see Battery on page 32).

Remove the WLAN module:

1. Remove the plastic piece **(1)** that protects the antenna connectors.
2. Carefully disconnect the two antenna cables **(2)** from the module.

3. Remove the Phillips M2.0 × 3.0 screw **(3)**, and then pull the module out of the socket to remove it **(4)**.

NOTE: The #1 white WLAN antenna cable connects to the WLAN module #1 Main terminal. The #2 black WLAN antenna cable connects to the WLAN module #1 Aux terminal.

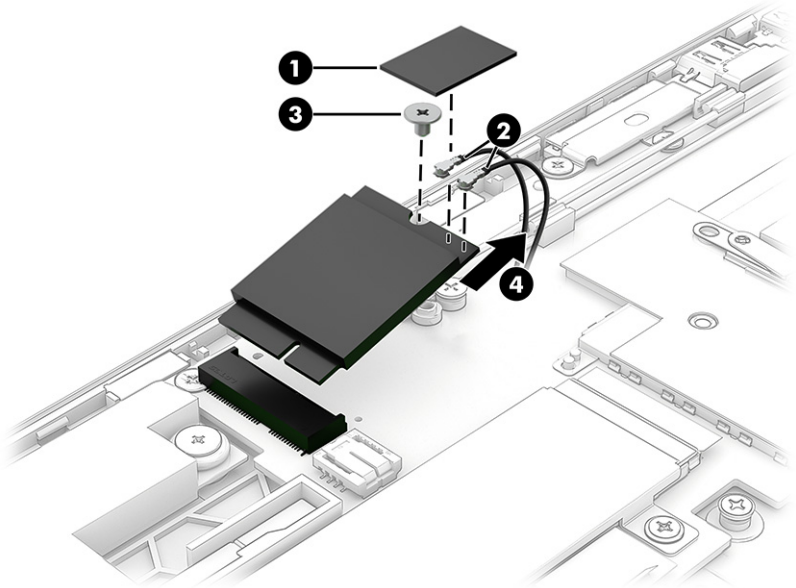

4. If the WLAN antenna is not connected to the terminal on the WLAN module, install a protective sleeve on the antenna connector, as shown in the following illustration.

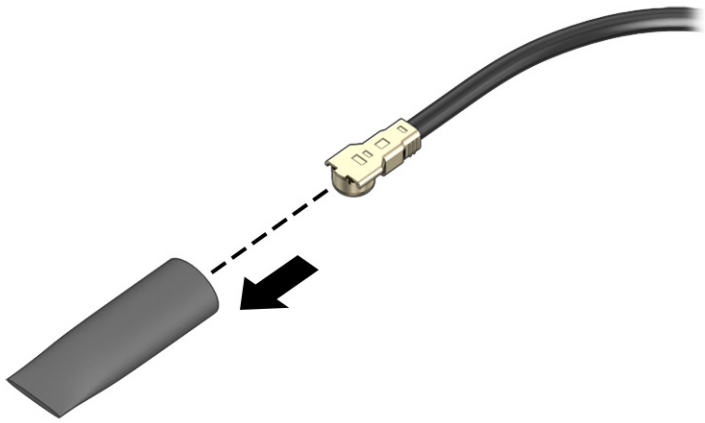

To install the WLAN module, reverse this procedure.

Speakers

To remove the speakers, use this procedure and illustration.

Table 5-5 Speaker description and part number

Description	Spare part number
Speaker Kit	N47947-001

Before removing the speakers, follow these steps:

1. Prepare the computer for disassembly (see Preparation for disassembly on page 30).
2. Remove the bottom cover (see Bottom cover on page 30).
3. Remove the battery (see Battery on page 32).

Remove the speakers:

1. Disconnect the speaker cable **(1)** from the system board.
2. Remove the two Phillips M2.0 × 2.0 screws **(2)** that secure each speaker to the computer.
3. Lift the speakers out of the computer **(3)**, and then remove the speaker cable from the clips **(4)**.

   When removing the speakers, make note of the location of the four rubber isolator locations **(5)**. The absence of or damage to these isolators can result in degraded speaker performance.

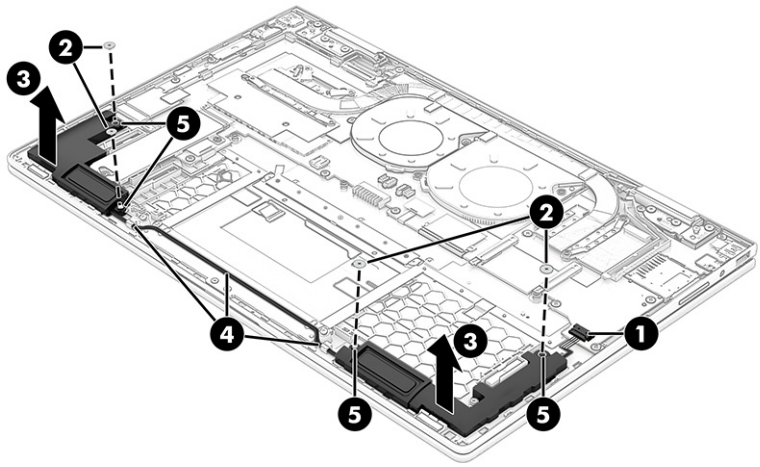

To install the speakers, reverse this procedure.

Touchpad

To remove the touchpad, use this procedure and illustration.

Table 5-6 Touchpad description and part number

Description	Spare part number
Touchpad, natural silver	N47938-001
Touchpad, nightfall black	N47939-001
Touchpad cable	N47941-001

NOTE: All flat cable connectors are covered with a piece of Mylar to prevent accidental disconnection. Be sure to replace this Mylar during reassembly.

Before removing the touchpad, follow these steps:

1. Prepare the computer for disassembly (see Preparation for disassembly on page 30).
2. Remove the bottom cover (see Bottom cover on page 30).
3. Remove the battery (see Battery on page 32).

Remove the touchpad:

1. Remove the Mylar that secures the speaker cable, and then remove the cable.
2. Remove the four Phillips M1.6 × 2.5 screws **(1)** that secure the touchpad bracket to the computer, and then remove the bracket **(2)**.

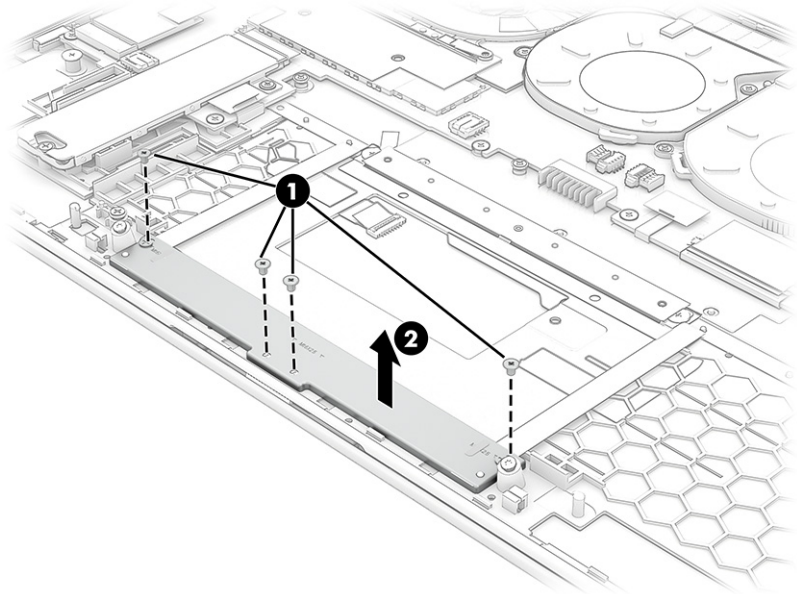

3. Disconnect the cable **(1)** from the touchpad ZIF connector.
4. Remove the large black Mylar strip **(2)** from the top of the touchpad.
5. Remove the three broadhead Phillips M2.0 × 2.0 screws **(3)** that secure the touchpad to the computer.

6. Remove the touchpad **(4)**.

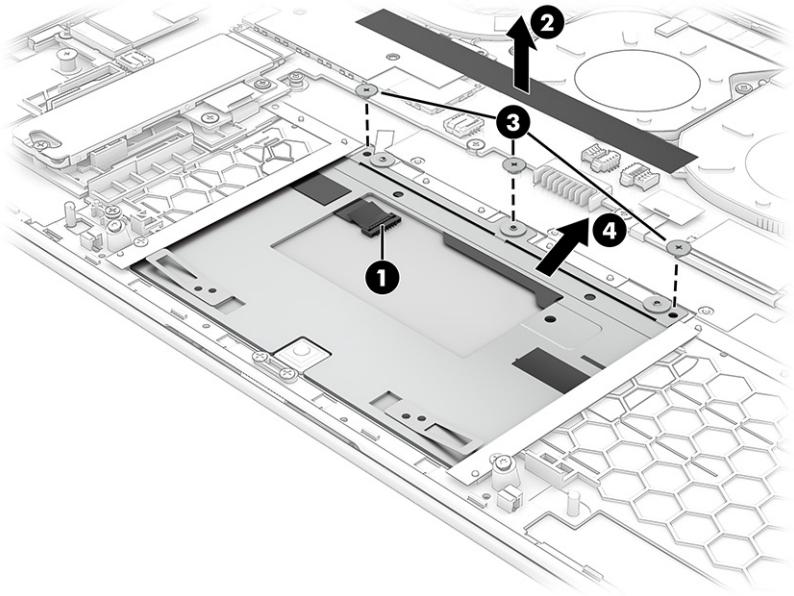

To install the touchpad, reverse this procedure.

Fans

To remove the fans, use this procedure and illustration.

Table 5-7 **Fan descriptions and part numbers**

Description	Spare part number
System fans (processor and graphics)	N47948-001

Before removing the fans, follow these steps:

1. Prepare the computer for disassembly (see Preparation for disassembly on page 30).
2. Remove the bottom cover (see Bottom cover on page 30).
3. Remove the battery (see Battery on page 32).

Remove the fans:

1. **Processor fan**: Disconnect the fan cable **(1)** from the system board.
2. Remove the Mylar from the fan **(2)**.

3. Remove the two Phillips M2.0 × 3.5 screws **(3)** that secure the fan to the computer, and then remove the fan **(4)**.

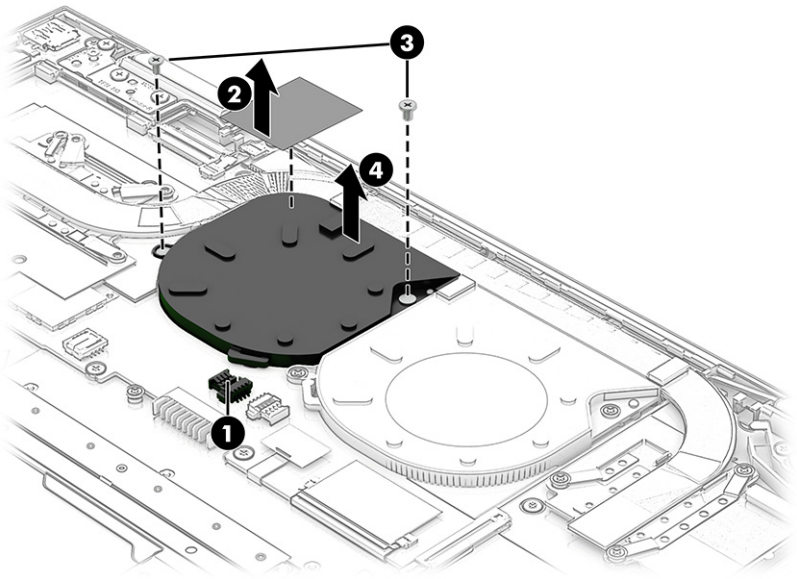

4. **Graphics fan**: Disconnect the fan cable **(1)** from the system board.
5. Remove the two Phillips M2.0 × 3.5 screws **(2)** that secure the fan to the computer, and then remove the fan **(3)**.

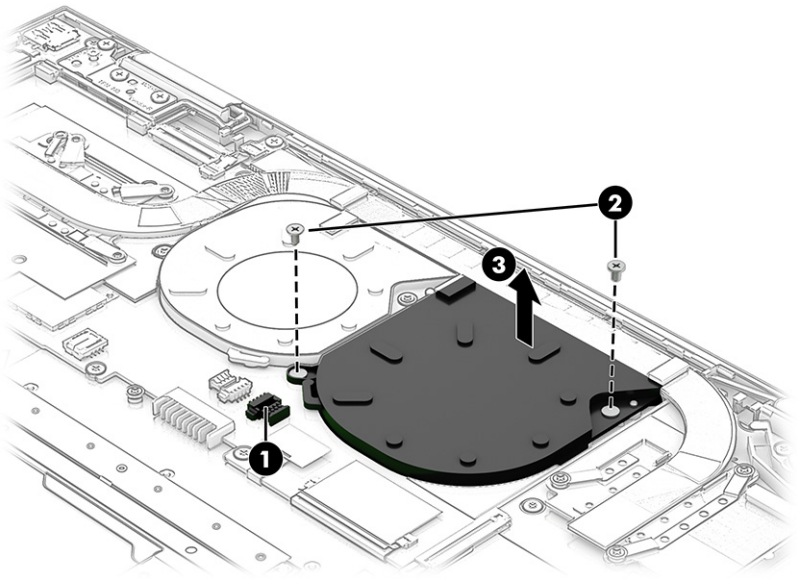

To install the fans, reverse this procedure.

Heat sink

To remove the heat sink, use this procedure and illustration.

Table 5-8 **Heat sink description and part number**

Description	Spare part number
Heat sink, 25 W	N47946-001
Thermal pad	N49812-001

NOTE: You do not have to remove the heat sink before you remove the system board.

Before removing the heat sink, follow these steps:

1. Prepare the computer for disassembly (see Preparation for disassembly on page 30).
2. Remove the bottom cover (see Bottom cover on page 30).
3. Remove the battery (see Battery on page 32).

Remove the heat sink:

1. Loosen the four captive Phillips screws **(1)** that secure the heat sink to the computer, and then remove the heat sink **(2)**.

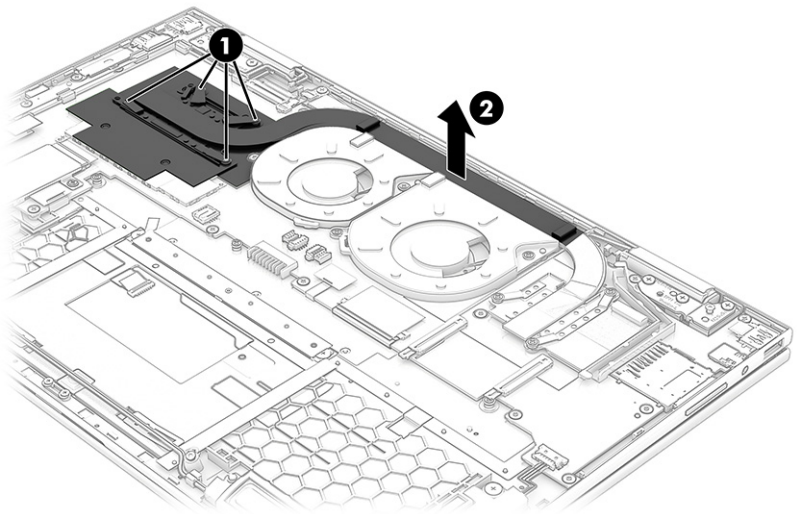

2. Thoroughly clean the thermal material from the surfaces of the heat sink and the system board components each time the heat sink is removed. Replacement thermal material is included with the heat sink and system board spare part kits. The following illustration shows the replacement thermal material location.

   Thermal material is used on the heat sink **(1)** and system board **(2)**.

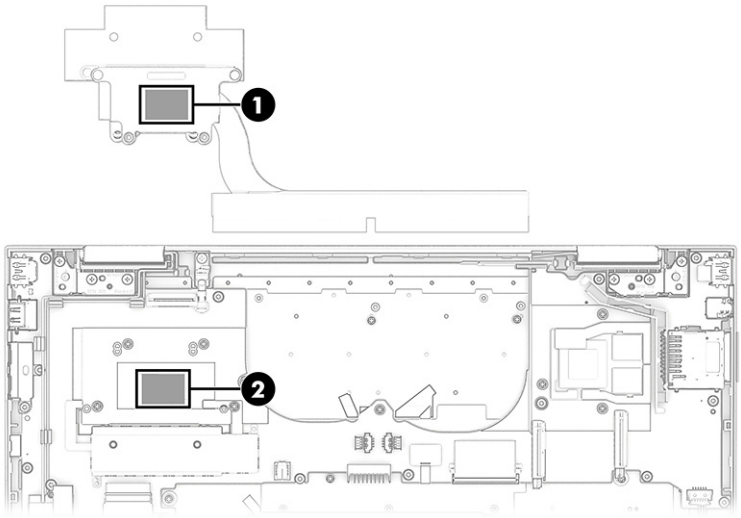

To install the heat sink, reverse this procedure.

IR board

To remove the IR board, use this procedure and illustration.

Table 5-9 IR board description and part number

Description	Spare part number
IR board	N47937-001
IR board cable	N47940-001

Before removing the IR board, follow these steps:

1. Prepare the computer for disassembly (see Preparation for disassembly on page 30).
2. Remove the bottom cover (see Bottom cover on page 30).
3. Remove the battery (see Battery on page 32).

Remove the IR board:

1. Disconnect the cable from the ZIF connector **(1)** on the board.
2. Remove the Phillips M2.0 × 3.0 screw **(2)** from the board .

3. Remove the board from the computer **(3)**.

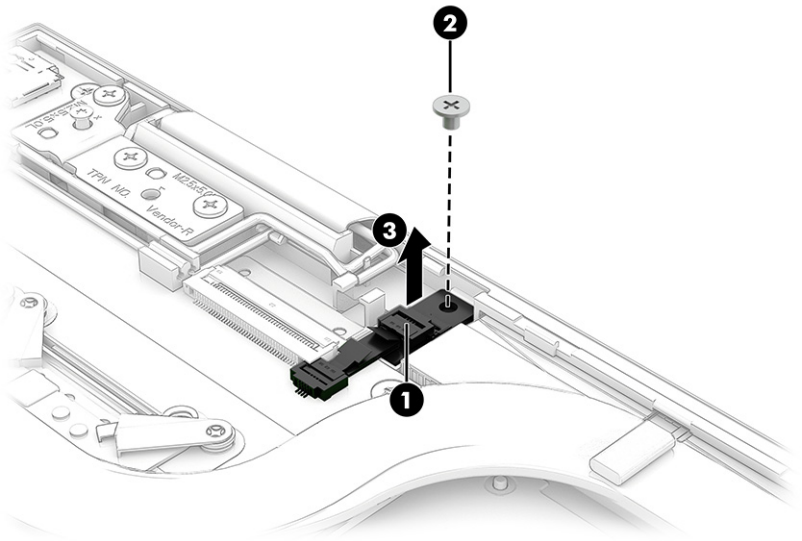

To install the IR board, reverse this procedure.

System board and heat sink combination

To remove the system board, use these procedures and illustrations.

Table 5-10 **System board descriptions and part numbers**

Description	Spare part number
AMD Ryzen 7 7730U processor and 16 GB of system memory	N47923-601
AMD Ryzen 5 7530U processor and 16 GB of system memory	N47922-601
AMD Ryzen 5 7530U processor and 8 GB of system memory	N47921-601

Before removing the system board, follow these steps:

NOTE: All flat cable connectors are covered with a piece of Mylar to prevent accidental disconnection. Be sure to replace this Mylar during reassembly.

1. Prepare the computer for disassembly (see Preparation for disassembly on page 30).
2. Remove the bottom cover (see Bottom cover on page 30).
3. Remove the battery (see Battery on page 32).
4. Remove the solid-state drive (see Solid-state drive on page 33).
5. Remove the WLAN module (see WLAN module on page 35).

When you replace the system board, be sure to remove the solid-state drive (see Solid-state drive on page 33) from the defective system board and install it on the replacement system board.

NOTE: You do not have to remove the heat sink before you remove the system board.

Remove the system board:

1. Remove the Mylar from the following connectors:
   - IR board **(1)**
   - Keyboard **(2)**
   - Touchpad **(3)**
   - Touchpad **(4)**

     The Mylar is available in the Misc Mylar Kit, spare part number N47945-001.

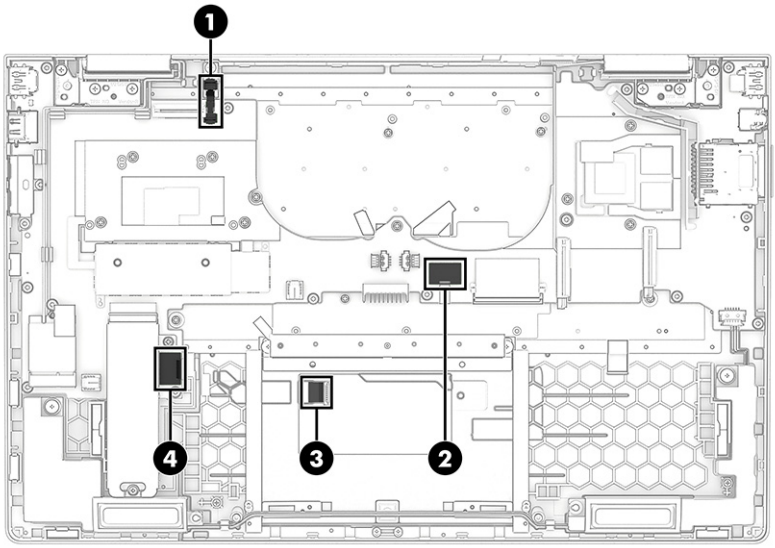

2. Disconnect the following cables from the system board:
   - Camera cable (ZIF) **(1)**
   - IR board cable (ZIF) **(2)**
   - Speaker cable **(3)**
   - Display cable (ZIF) **(4)**
   - Keyboard cable (ZIF) **(5)**
   - Backlight cable (ZIF) **(6)**
   - Touchpad cable (ZIF) **(7)**
   - Antenna cables from the WLAN module **(8)**
   - Antenna cables from clips **(9)**

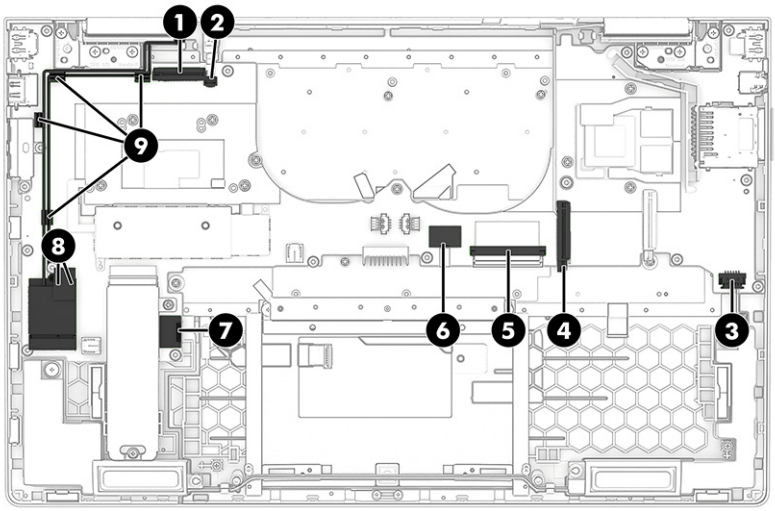

3. Remove the five Phillips M1.6 × 1.8 screws **(1)** and the 10 Phillips M2.0 × 3.0 screws **(2)** that secure the system board to the computer.

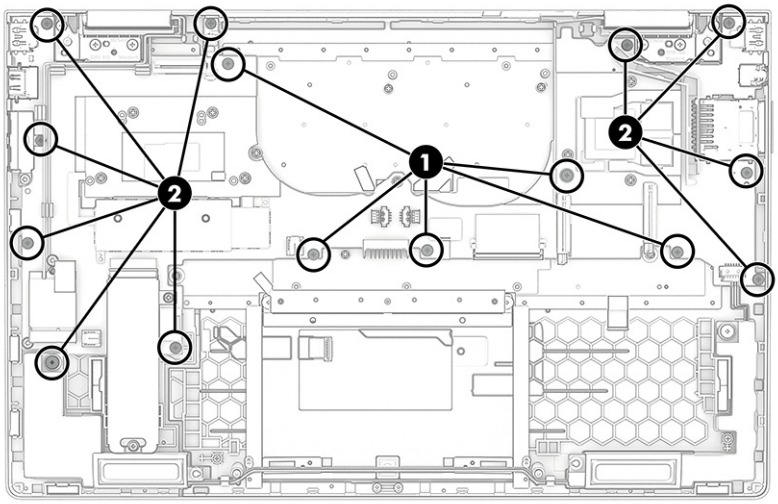

4. Lift the left edge of the system board **(1)**, and then pull the board up and to the left to remove it from the computer **(2)**.

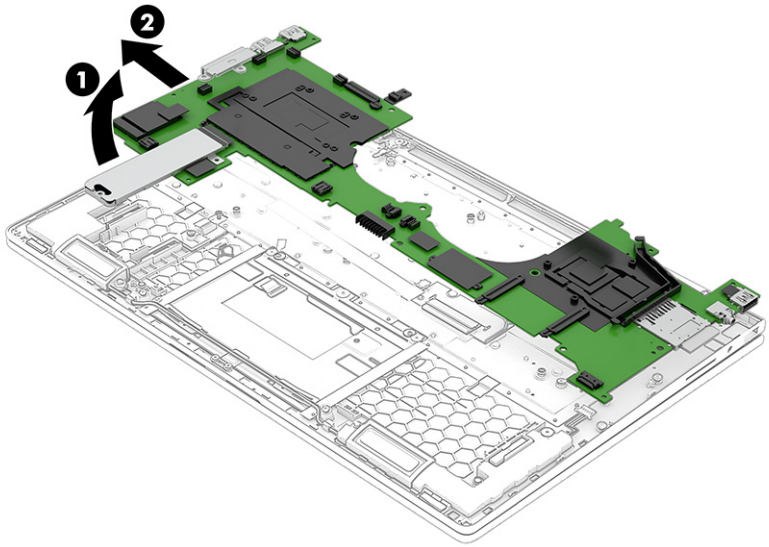

To install the system board, reverse this procedure.

Display assembly

To remove and disassemble the display assembly, use these procedures and illustrations.

Full hinge-up displays are not available as spare parts. Spare parts for displays are available only at the subcomponent level.

NOTE: All flat cable connectors are covered with a piece of Mylar to prevent accidental disconnection. Be sure to replace this Mylar during reassembly.

Before removing the display panel, follow these steps:

1. Prepare the computer for disassembly (see Preparation for disassembly on page 30).
2. Remove the bottom cover (see Bottom cover on page 30).
3. Remove the battery (see Battery on page 32).

Remove the display assembly:

1. Remove the plastic antenna cover and disconnect the antenna cables **(1)** from the WLAN module.
2. Remove the antenna cable from the routing clips **(2)**.

3. Disconnect the camera cable **(3)** and right display cable **(4)** from the ZIF connectors on the system board.

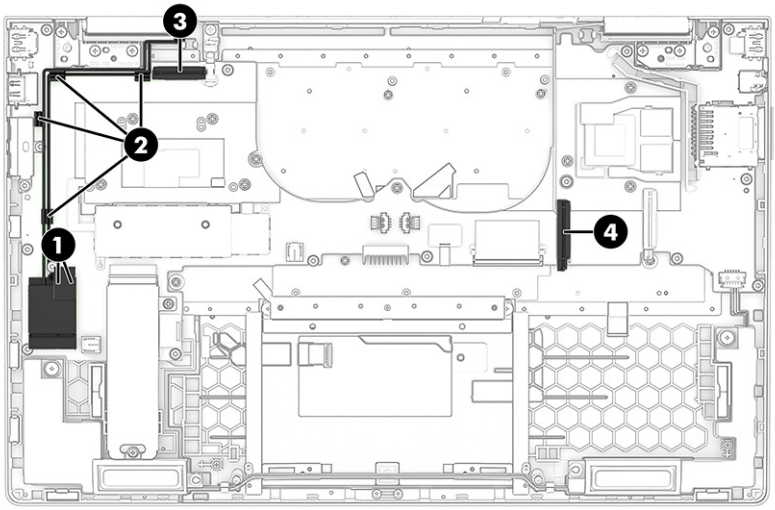

4. Remove the eight Phillips M2.5 × 5.0 screws **(1)** that secure the display assembly to the computer.
5. Open the display to 90° to open the hinges **(2)**.
6. Separate the display from the computer **(3)**.

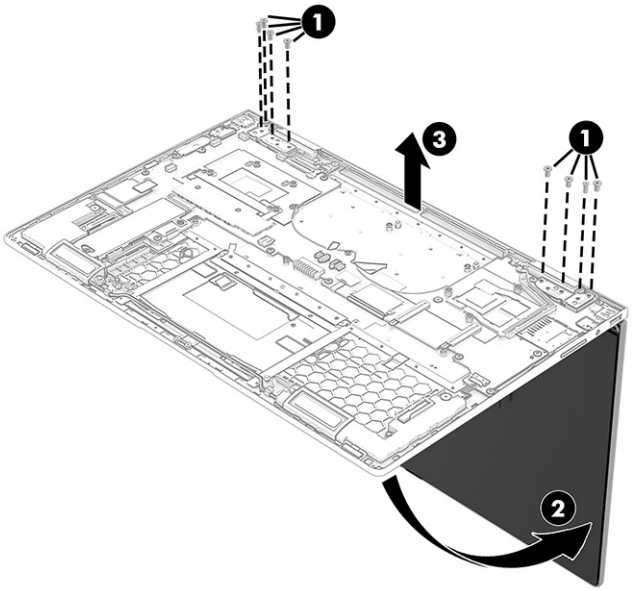

7. To remove the display panel:

a. Rotate the display hinges to the open position.

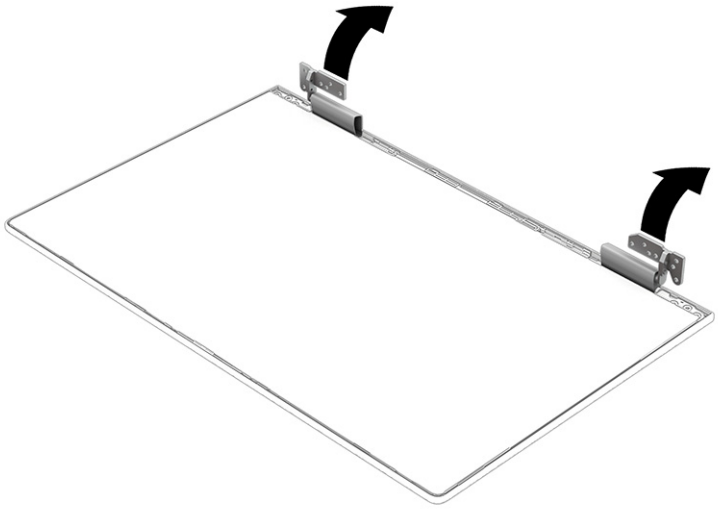

b. Place suction cups **(1)** on the top and bottom of the left side of the display, and then tighten the suction cups **(2)** onto the display.

c. While pulling the suction cups **(3)** away from each other, insert a tool **(4)** into the seam of the display to separate the panel from the display rear cover.

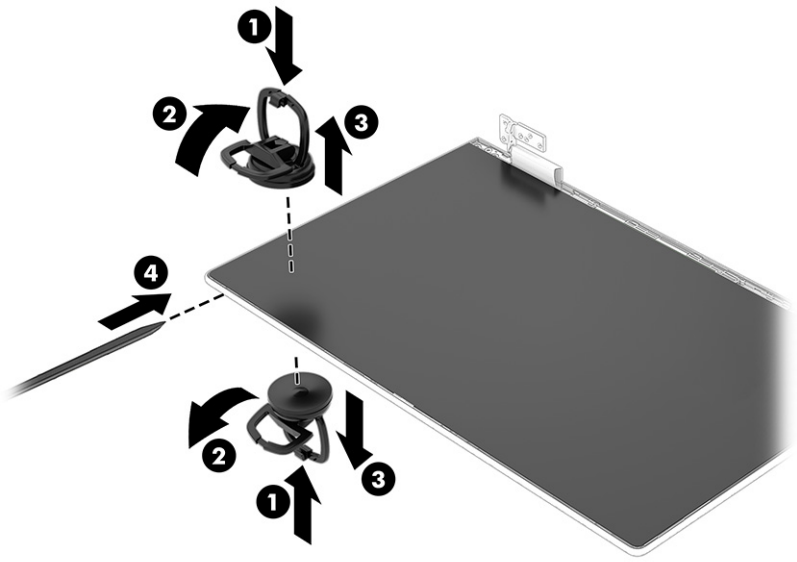

d. If necessary, repeat this process to release the display panel from the right side of the display.

e. On the top left and right sides of the display panel **(1)**, use tweezers to grasp the ends of the stretchable tape that is installed under the panel.

f. While turning the tweezers **(2)**, wrap the tape around the tweezers as you continue to pull the tape **(3)** out from behind the display panel.

g. Lift the panel and place it next to the display rear cover.

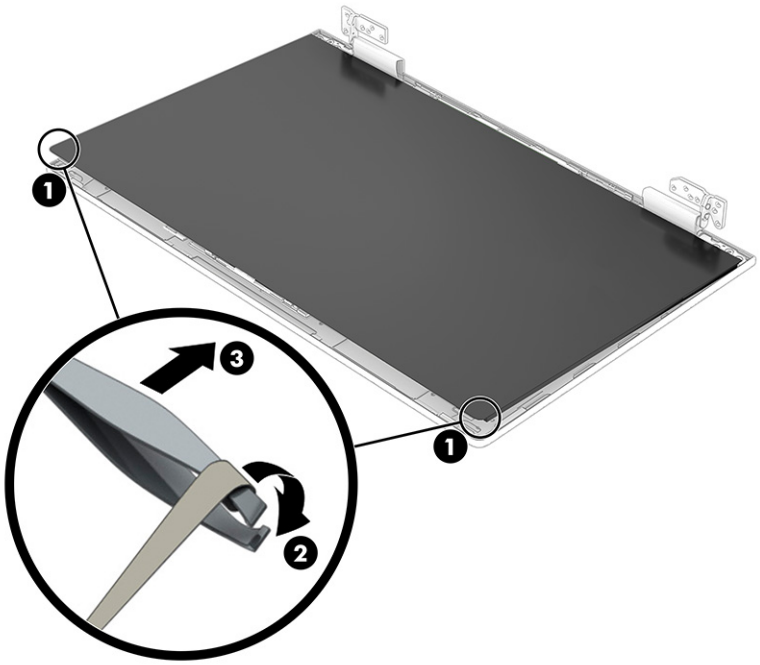

h. Remove the tape **(1)** from on top of the connector on the back of the display panel.

i. Disconnect the cable **(2)** from the panel.

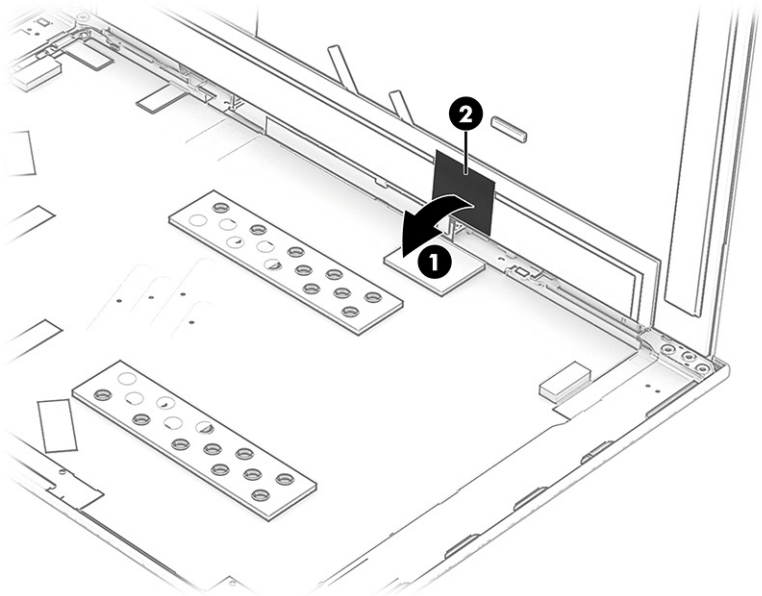

j. When installing a display panel, be sure to install the tape on the left and right sides of the display back cover as shown in the following illustration. Display panel tape is available as spare part number N49203-001.

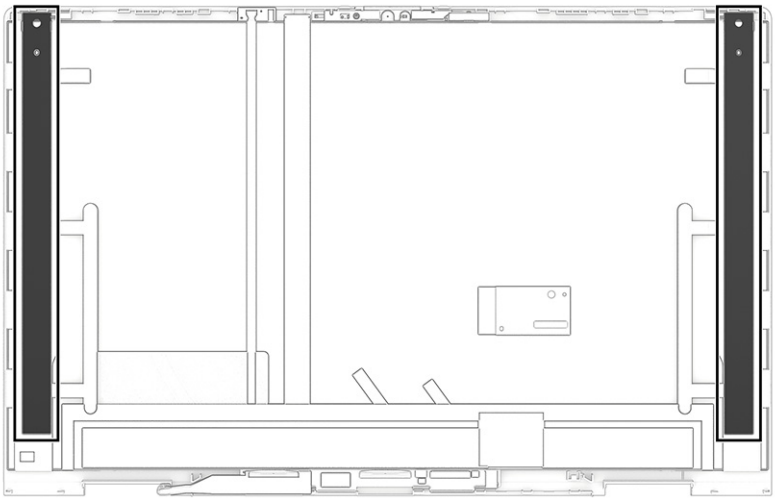

Display panels are available using the following spare part numbers:

- N47924-001: FHD, antiglare, 250 nits, natural silver
- N47925-001: OLED, BrightView, 400 nits, natural silver
- N48155-001: FHD, antiglare, 250 nits, nightfall black
- N48156-001: OLED, BrightView, 400 nits, nightfall black

8. To remove the hinges from the display enclosure:

   a. Remove the antenna cable **(1)** from the right hinge.

   b. Remove the three Phillips M2.5 × 2.5 screws **(2)** that secure each hinge to the display back cover.

   c. Remove the display hinges **(3)**.

      The display hinges are available using spare part number N47931-001.

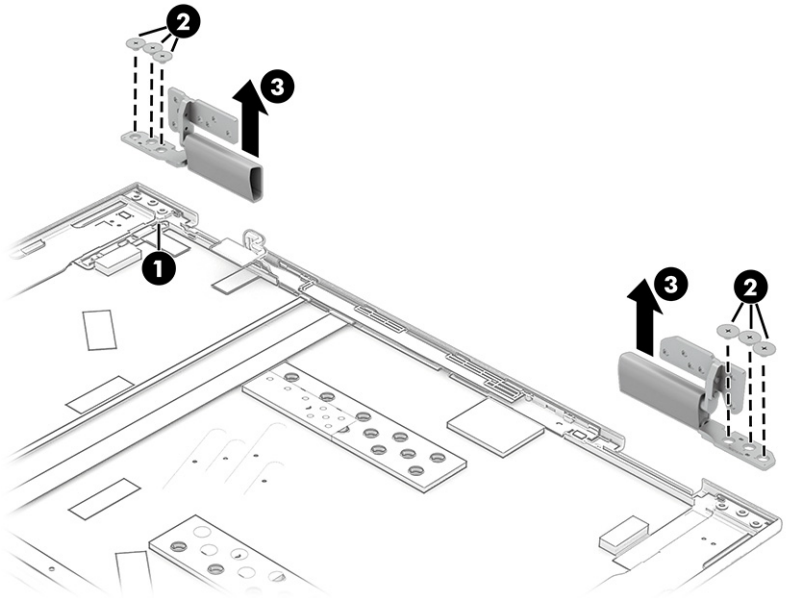

d. To remove the hinge covers, remove the Phillips M2.0 × 3.0 screw **(1)** from each cover, and then remove the covers **(2)**.

The display hinge covers are available using spare part number N48225-001 for nightfall black models and N47933-001 for natural silver models.

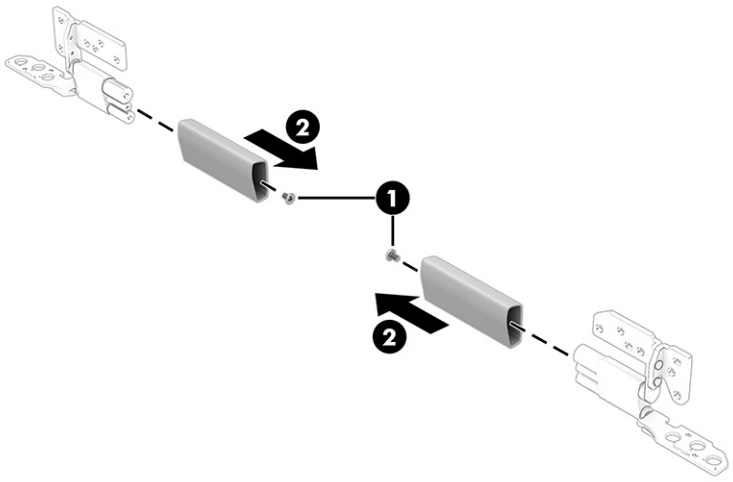

9. To remove the camera module:

a. Insert a tool **(1)** under the left side of the module and release the left side of the module.

b. Insert a tool **(2)** under the right side of the module and release the right side of the module.

c. Carefully lift and turn the module **(3)** over to release it from the display back cover. The module is attached with double-sided adhesive.

d. Disconnect the cable from the ZIF connector **(4)** on the module. Note that the cable routes underneath the module.

NOTE: The camera module includes adhesive. Be sure to apply this adhesive to the bezel.

The camera module is available as spare part number N47935-001.

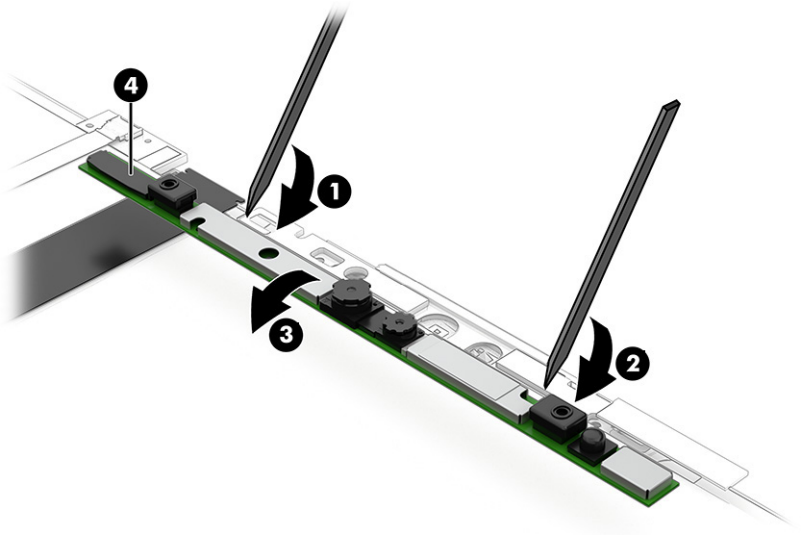

10. To remove the OLED board:

    a. Disconnect the cable from the ZIF connector **(1)** on the board.

    b. Use a tool to carefully lift the board **(2)** to release it from the display back cover. The board is attached to the display back cover with double-sided adhesive.

    The OLED board is available as spare part number N47926-001.

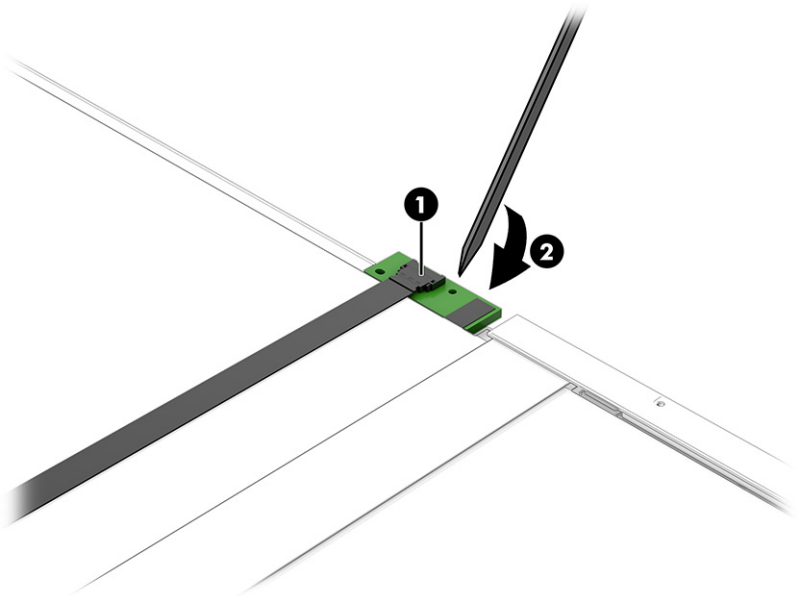

c. To install an OLED board, install two thermal pads between the alignment marks on the display at the locations shown in the following illustration.

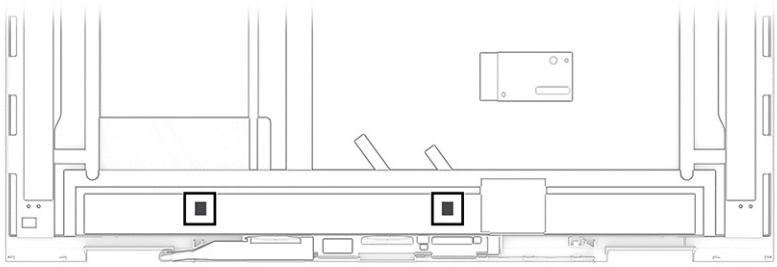

d. Connect the eDP connector **(1)** to the panel.

e. Connect the touch connector **(2)** to the panel.

f. Connect the OLED cable to the connector **(3)** on the OLED board.

g. Route the OLED cable through the clips **(4)** on the bottom of the panel.

h. Remove the adhesive covering **(5)** from the bottom of the OLED board.

i. Press the board **(6)** down onto to the panel.

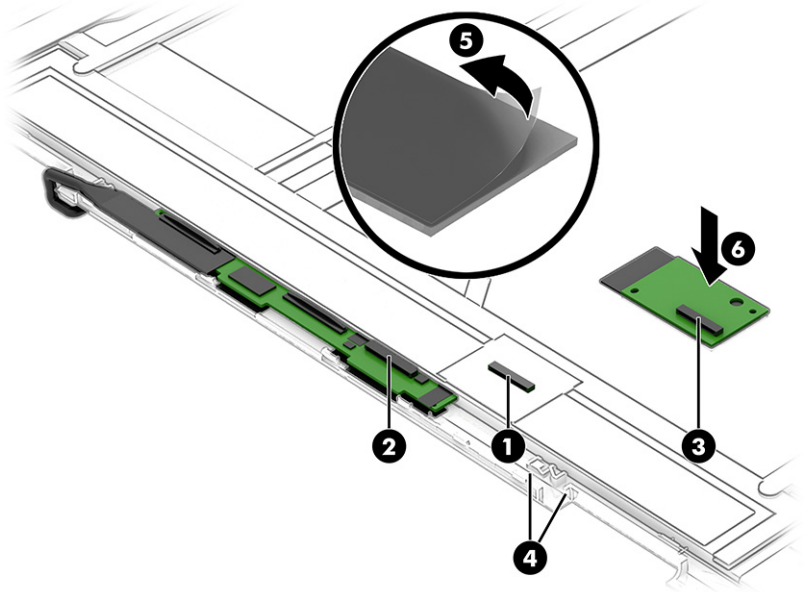

11. To remove the touch control board:

a. Peel the cable assembly **(1)** off the board.

b. Lift the conductive tape **(2)**.

c. Peel the tape **(3)** off the display panel connector.

d. Disconnect the cable **(4)** from the panel.

e. Disconnect the display cable **(5)** from the board.

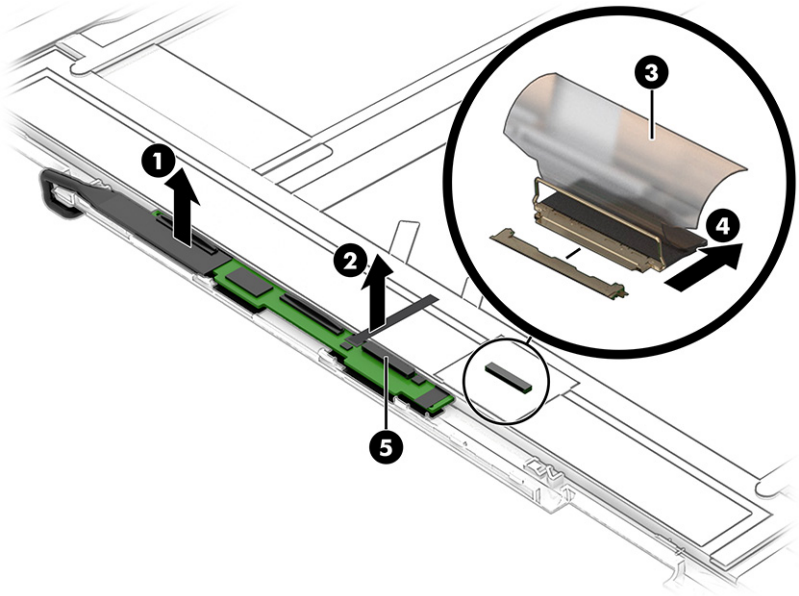

f. Use a tool **(1)** to release ends of the board.

g. Release the board from the computer **(2)**, and then disconnect the two flat ribbon cables **(3)** from the board.

The touch control board is available as spare part number N48231-001.

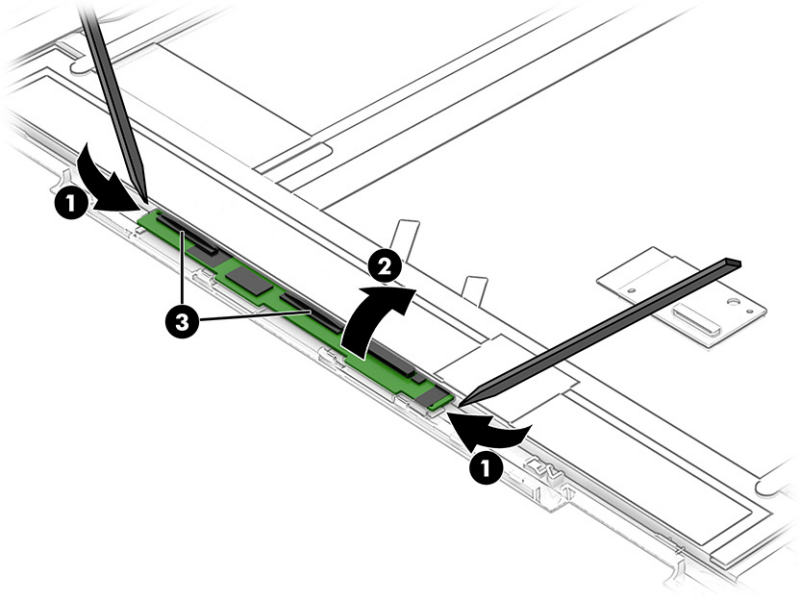

12. To remove the camera cable:

a. Remove the camera module, and then disconnect the cable **(1)** from the bottom of the module.

b. Disconnect the cable from the OLED board **(2)**.

c. Peel the camera cable **(3)** off the inside of the display rear cover.

d. Peel the OLED cable **(4)** off the inside of the display rear cover.

e. Peel the bottom of the cable **(5)** off the bottom of the display rear cover.

The camera cable is available as spare part number N47932-001

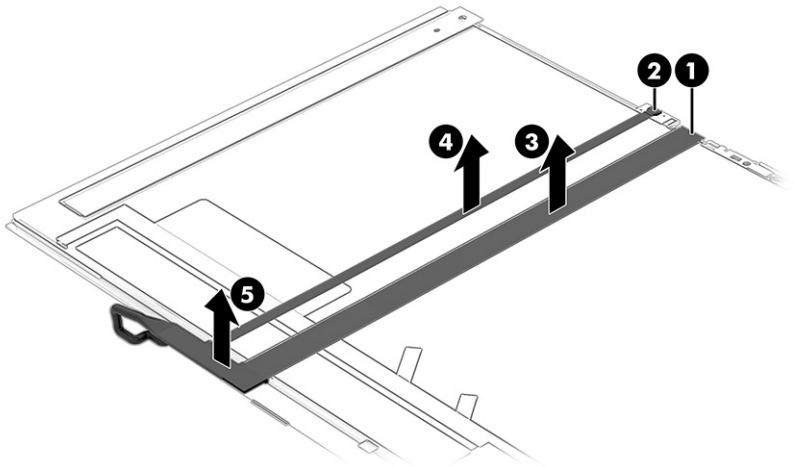

13. To remove the WLAN antennas:

a. Remove the wireless antenna cables **(1)** from the tape on the inside of the display back cover.

b. Peel the wireless antennas **(2)** off the display rear cover. The antennas are attached with double-sided adhesive. The wireless antennas for QHD/FHD displays are available using spare part number N47950-001.

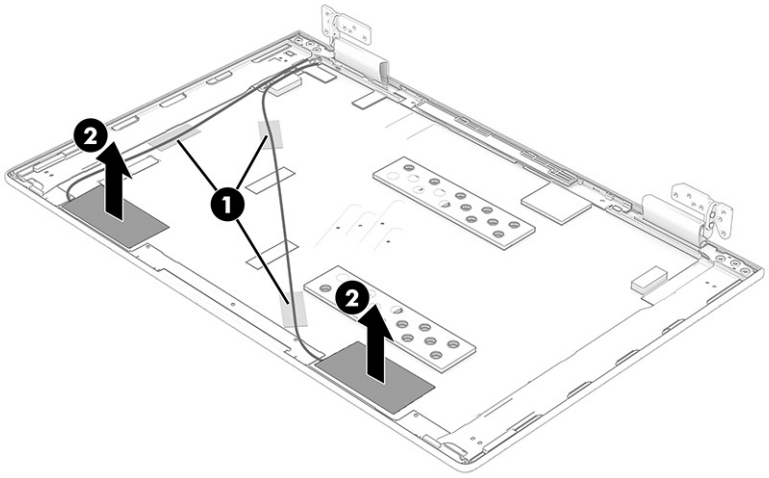

The display back cover with dual antennas is available as the following spare part numbers:

- N47927-001: Natural silver, QHD/FHD panel
- N47928-001: Nightfall black, QHD/FHD panel
- N47929-001: Natural silver, OLED panel
- N47930-001: Natural silver, OLED panel

To reassemble and replace the display assembly, reverse these procedures.

Top cover with keyboard

The top cover with keyboard remains after removing all other spare parts from the computer. In this section, the first table provides the main spare part number for the top covers with keyboards. The second table provides the country codes.

Table 5-11 Top cover with keyboard descriptions and part numbers

Description	Spare part number
Natural silver	N47952-xxx
NOTE: Available only in the United States (-001) and French Canada (-DB1)	
Nightfall black	N47953-xxx

Table 5-12 Spare part country codes

For use in country or region	Spare part number	For use in country or region	Spare part number	For use in country or region	Spare part number
Belgium	-A41	Hungary	-211	Saudi Arabia	-171
Brazil	-201	Iceland	-DD1	Slovenia	-BA1
Bulgaria	-261	India	-D61	South Korea	-AD1
Chile	-161	Israel	-BB1	Spain	-071
Czech Republic/Slovakia	-FL1	Italy	-061	Switzerland	-BG1
Denmark	-081	Japan	-291	Taiwan	-AB1
Denmark, Finland, and Norway	-DH1	The Netherlands	-B31	Thailand	-281
French Canada	-DB1	Northern Africa	-FP1	Turkey	-141
Finland/Sweden	-B71	Norway	-091	Turkey-F	-541
France	-051	Portugal	-131	Ukraine	-BD1
Germany	-041	Romania	-271	United Kingdom	-031
Greece	-151	Russia	-251	United States	-001

6 Using Setup Utility (BIOS)

Setup Utility, or Basic Input/Output System (BIOS), controls communication between all the input and output devices on the system (such as disk drives, display, keyboard, mouse, and printer). Setup Utility (BIOS) includes settings for the types of devices installed, the startup sequence of the computer, and the amount of system and extended memory.

NOTE: To start Setup Utility on convertible computers, your computer must be in notebook mode and you must use the keyboard attached to your notebook.

Starting Setup Utility (BIOS)

You have several ways to access the Setup Utility (BIOS).

IMPORTANT: Use extreme care when making changes in Setup Utility (BIOS). Errors can prevent the computer from operating properly.

- Turn on or restart the computer and quickly press f10.

  - or -

  Turn on or restart the computer, quickly press esc, and then press f10 when the Start menu is displayed.

Updating Setup Utility (BIOS)

Updated versions of Setup Utility (BIOS) might be available on the HP website. Most BIOS updates on the HP website are packaged in compressed files called *SoftPaqs*. Some download packages contain a file named Readme.txt, which contains information regarding installing and troubleshooting the file.

Determining the BIOS version

To decide whether you need to update Setup Utility (BIOS), first determine the BIOS version on your computer.

To reveal the BIOS version information (also known as *ROM date* and *System BIOS*), use one of these options.

- HP Support Assistant

  1. Select the **Search** icon in the taskbar, type `support` in the search box, and then select the **HP Support Assistant** app.

     - or -

     Select the question mark icon in the taskbar.

  2. Under **My notebook**, select **Specifications**.

- Setup Utility (BIOS)

  1. Start Setup Utility (BIOS) (see Starting Setup Utility (BIOS) on page 57).

2. Select **Main**, and then make note of the BIOS version.
3. Select **Exit**, select one of the options, and then follow the on-screen instructions.

- In Windows, press ctrl+alt+s.

To check for later BIOS versions, see Preparing for a BIOS update on page 58.

Preparing for a BIOS update

Be sure to follow all prerequisites before downloading and installing a BIOS update.

IMPORTANT: To reduce the risk of damage to the computer or an unsuccessful installation, download and install a BIOS update only when the computer is connected to reliable external power using the AC adapter. Do not download or install a BIOS update while the computer is running on battery power, docked in an optional docking device, or connected to an optional power source. During the download and installation, follow these instructions:

- Do not disconnect power from the computer by unplugging the power cord from the AC outlet.
- Do not shut down the computer or initiate Sleep.
- Do not insert, remove, connect, or disconnect any device, cable, or cord.

NOTE: If your computer is connected to a network, consult the network administrator before installing any software updates, especially system BIOS updates.

Downloading a BIOS update

After you review the prerequisites, you can check for and download BIOS updates.

1. Select the **Search** icon in the taskbar, type `support` in the search box, and then select the **HP Support Assistant** app.

   – or –

   Select the question mark icon in the taskbar.
2. Select **Updates**. The **Checking for Updates** window opens, and Windows checks for updates.
3. Follow the on-screen instructions.
4. At the download area, follow these steps:
   a. Identify the most recent BIOS update and compare it to the BIOS version currently installed on your computer. If the update is more recent than your BIOS version, make a note of the date, name, or other identifier. You might need this information to locate the update later, after it has been downloaded to your hard drive.
   b. Follow the on-screen instructions to download your selection to the hard drive.

      Make a note of the path to the location on your hard drive where the BIOS update is downloaded. You will need to access this path when you are ready to install the update.

Installing a BIOS update

BIOS installation procedures vary. Follow any instructions that appear on the screen after the download is complete. If no instructions appear, follow these steps.

1. Select the **Search** icon in the taskbar, type `file` in the search box, and then select **File Explorer**.

2. Select your hard drive designation. The hard drive designation is typically Local Disk (C:).
3. Using the hard drive path you recorded earlier, open the folder that contains the update.
4. Double-click the file that has an .exe extension (for example, *filename*.exe).

   The BIOS installation begins.
5. Complete the installation by following the on-screen instructions.

NOTE: After a message on the screen reports a successful installation, you can delete the downloaded file from your hard drive.

7 Using HP PC Hardware Diagnostics

You can use the HP PC Hardware Diagnostics utility to determine whether your computer hardware is running properly. The three versions are HP PC Hardware Diagnostics Windows, HP PC Hardware Diagnostics UEFI (Unified Extensible Firmware Interface), and (for select products only) Remote HP PC Hardware Diagnostics UEFI, a firmware feature.

Using HP PC Hardware Diagnostics Windows (select products only)

HP PC Hardware Diagnostics Windows is a Windows-based utility that allows you to run diagnostic tests to determine whether the computer hardware is functioning properly. The tool runs within the Windows operating system to diagnose hardware failures.

If HP PC Hardware Diagnostics Windows is not installed on your computer, you must download and install it. To download HP PC Hardware Diagnostics Windows, see Downloading HP PC Hardware Diagnostics Windows on page 61.

Using an HP PC Hardware Diagnostics Windows hardware failure ID code

When HP PC Hardware Diagnostics Windows detects a failure that requires hardware replacement, a 24-digit failure ID code is generated for select component tests. For interactive tests, such as keyboard, mouse, or audio and video palette, you must perform troubleshooting steps before you can receive a failure ID.

- You have several options after you receive a failure ID:
  - Select **Next** to open the Event Automation Service (EAS) page, where you can log the case.
  - Scan the QR code with your mobile device, which takes you to the EAS page, where you can log the case.
  - Select the box next to the 24-digit failure ID to copy your failure code and send it to support.

Accessing HP PC Hardware Diagnostics Windows

After HP PC Hardware Diagnostics Windows is installed, you can access it from HP Support Assistant or the Start menu.

Accessing HP PC Hardware Diagnostics Windows from HP Support Assistant

After HP PC Hardware Diagnostics Windows is installed, follow these steps to access it from HP Support Assistant:

1. Complete one of the following tasks:
   - Select the **Search** icon in the taskbar, type `support` in the search box, and then select the **HP Support Assistant** app.
   - Select the question mark icon in the taskbar.
2. Select **Fixes & Diagnostics**.

3. Select **Run hardware diagnostics**, and then select **Launch**.
4. When the tool opens, select the type of diagnostic test that you want to run, and then follow the on-screen instructions.

NOTE: To stop a diagnostic test, select **Cancel**.

Accessing HP PC Hardware Diagnostics Windows from the Start menu (select products only)

After HP PC Hardware Diagnostics Windows is installed, follow these steps to access it from the Start menu:

1. Select the **Start** button, and then select **All apps**.
2. Select **HP PC Hardware Diagnostics Windows**.
3. When the tool opens, select the type of diagnostic test that you want to run, and then follow the on-screen instructions.

NOTE: To stop a diagnostic test, select **Cancel**.

Downloading HP PC Hardware Diagnostics Windows

The HP PC Hardware Diagnostics Windows downloading instructions are provided in English only. You must use a Windows computer to download this tool because only .exe files are provided.

Downloading the latest HP PC Hardware Diagnostics Windows version from HP

To download HP PC Hardware Diagnostics Windows from HP, follow these steps:

1. Go to http://www.hp.com/go/techcenter/pcdiags. The HP PC Diagnostics home page is displayed.
2. Select **Download HP Diagnostics Windows**, and then select the specific Windows diagnostics version to download to your computer or a USB flash drive.

The tool downloads to the selected location.

Downloading the HP PC Hardware Diagnostics Windows from the Microsoft Store

You can download the HP PC Hardware Diagnostics Windows from the Microsoft Store:

1. Select the Microsoft Store app on your desktop or select the **Search** icon in the taskbar, and then type `Microsoft Store` in the search box.
2. Type `HP PC Hardware Diagnostics Windows` in the **Microsoft Store** search box.
3. Follow the on-screen directions.

The tool downloads to the selected location.

Downloading HP Hardware Diagnostics Windows by product name or number (select products only)

You can download HP PC Hardware Diagnostics Windows by product name or number.

NOTE: For some products, you might have to download the software to a USB flash drive by using the product name or number.

1. Go to http://www.hp.com/support.
2. Select **Software and Drivers**, select your type of product, and then enter the product name or number in the search box that is displayed.
3. In the **Diagnostics** section, select **Download**, and then follow the on-screen instructions to select the specific Windows diagnostics version to be downloaded to your computer or USB flash drive.

The tool downloads to the selected location.

Installing HP PC Hardware Diagnostics Windows

To install HP PC Hardware Diagnostics Windows, navigate to the folder on your computer or the USB flash drive where the .exe file downloaded, double-click the .exe file, and then follow the on-screen instructions.

Using HP PC Hardware Diagnostics UEFI

HP PC Hardware Diagnostics Unified Extensible Firmware Interface (UEFI) allows you to run diagnostic tests to determine whether the computer hardware is functioning properly. The tool runs outside the operating system so that it can isolate hardware failures from issues that are caused by the operating system or other software components.

NOTE: For some products, you must use a Windows computer and a USB flash drive to download and create the HP UEFI support environment because only .exe files are provided. For more information, see Downloading HP PC Hardware Diagnostics UEFI to a USB flash drive on page 63.

If your PC does not start in Windows, you can use HP PC Hardware Diagnostics UEFI to diagnose hardware issues.

Using an HP PC Hardware Diagnostics UEFI hardware failure ID code

When HP PC Hardware Diagnostics UEFI detects a failure that requires hardware replacement, a 24-digit failure ID code is generated.

For assistance in solving the problem, complete one of these tasks:

- Select **Contact HP**, accept the HP privacy disclaimer, and then use a mobile device to scan the failure ID code that appears on the next screen. The HP Customer Support - Service Center page appears with your failure ID and product number automatically filled in. Follow the on-screen instructions.
- Contact support, and provide the failure ID code.

Starting HP PC Hardware Diagnostics UEFI

To start HP PC Hardware Diagnostics UEFI, follow this procedure.

1. Turn on or restart the computer, and quickly press esc.
2. Press f2.

   The BIOS searches three places for the diagnostic tools, in the following order:

a. Connected USB flash drive

NOTE: To download the HP PC Hardware Diagnostics UEFI tool to a USB flash drive, see Downloading the latest HP PC Hardware Diagnostics UEFI version on page 63.

b. Hard drive

c. BIOS

3. When the diagnostic tool opens, select the type of diagnostic test that you want to run, and then follow the on-screen instructions.

Starting HP PC Hardware Diagnostics UEFI through HP Hotkey Support software (select products only)

This section describes how to start HP PC Hardware Diagnostics UEFI through HP Hotkey Support software.

NOTE: You must disable fast boot to access HP PC Hardware Diagnostics UEFI from the HP System Information application. To disable fast boot:

1. Turn on or restart the computer, and when the HP logo appears, press f10 to enter Computer Setup.
2. Select **Advanced**, and then select **Boot Options**.
3. Clear **Fast Boot**.
4. Select **Save Changes and Exit**, and then select **Yes**.

1. From the **Start** menu, open the HP System Information Application or enter fn+esc.
2. In HP System Information screen, select **Run System Diagnostics**, select **Yes** to run the application, and then select **Restart**.

IMPORTANT: To prevent loss of data, save your work in all open apps before restarting your computer.

NOTE: When the restart is complete, the computer will boot to HP PC Hardware Diagnostics UEFI Application. Proceed with the troubleshooting tests.

Downloading HP PC Hardware Diagnostics UEFI to a USB flash drive

Downloading HP PC Hardware Diagnostics UEFI to a USB flash drive can be useful in some situations.

- HP PC Hardware Diagnostics UEFI is not included in the preinstallation image.
- HP PC Hardware Diagnostics UEFI is not included in the HP Tool partition.
- The hard drive is damaged.

NOTE: The HP PC Hardware Diagnostics UEFI downloading instructions are provided in English only, and you must use a Windows computer to download and create the HP UEFI support environment because only .exe files are provided.

Downloading the latest HP PC Hardware Diagnostics UEFI version

To download the latest HP PC Hardware Diagnostics UEFI version to a USB flash drive, follow this procedure:

1. Go to http://www.hp.com/go/techcenter/pcdiags. The HP PC Diagnostics home page is displayed.
2. Select **Download HP Diagnostics UEFI**, and then select **Run**.

Downloading HP PC Hardware Diagnostics UEFI by product name or number (select products only)

You can download HP PC Hardware Diagnostics UEFI by product name or number (select products only) to a USB flash drive.

NOTE: For some products, you might have to download the software to a USB flash drive by using the product name or number.

1. Go to http://www.hp.com/support.
2. Enter the product name or number, select your computer, and then select your operating system.
3. In the **Diagnostics** section, follow the on-screen instructions to select and download the specific UEFI Diagnostics version for your computer.

Using Remote HP PC Hardware Diagnostics UEFI settings (select products only)

Remote HP PC Hardware Diagnostics UEFI is a firmware (BIOS) feature that downloads HP PC Hardware Diagnostics UEFI to your computer. It can then run the diagnostics on your computer, and it might upload results to a preconfigured server.

For more information about Remote HP PC Hardware Diagnostics UEFI, go to http://www.hp.com/go/techcenter/pcdiags, and then select **Find out more**.

Downloading Remote HP PC Hardware Diagnostics UEFI

Remote HP PC Hardware Diagnostics UEFI is also available as a SoftPaq that you can download to a server.

Downloading the latest Remote HP PC Hardware Diagnostics UEFI version

You can download the latest Remote HP PC Hardware Diagnostics UEFI version to a USB flash drive.

1. Go to http://www.hp.com/go/techcenter/pcdiags. The HP PC Diagnostics home page is displayed.
2. Select **Download Remote Diagnostics**, and then select **Run**.

Downloading Remote HP PC Hardware Diagnostics UEFI by product name or number

You can download Remote HP PC Hardware Diagnostics UEFI by product name or number.

NOTE: For some products, you might have to download the software by using the product name or number.

1. Go to http://www.hp.com/support.
2. Select **Software and Drivers**, select your type of product, enter the product name or number in the search box that is displayed, select your computer, and then select your operating system.

3. In the **Diagnostics** section, follow the on-screen instructions to select and download the **Remote UEFI** version for the product.

Customizing Remote HP PC Hardware Diagnostics UEFI settings

Using the Remote HP PC Hardware Diagnostics setting in Computer Setup (BIOS), you can perform several customizations.

- Set a schedule for running diagnostics unattended. You can also start diagnostics immediately in interactive mode by selecting **Execute Remote HP PC Hardware Diagnostics UEFI**.
- Set the location for downloading the diagnostic tools. This feature provides access to the tools from the HP website or from a server that has been preconfigured for use. Your computer does not require the traditional local storage (such as a hard drive or USB flash drive) to run remote diagnostics.
- Set a location for storing the test results. You can also set the user name and password that you use for uploads.
- Display status information about the diagnostics runs previously.

To customize Remote HP PC Hardware Diagnostics UEFI settings, follow these steps:

1. Turn on or restart the computer, and when the HP logo appears, press f10 to enter Computer Setup.
2. Select **Advanced**, and then select **Settings**.
3. Make your customization selections.
4. Select **Exit**, then select **Save Changes and Exit** to save your settings.

Your changes take effect when the computer restarts.

8 Backing up, restoring, and recovering

You can use Windows tools or HP software to back up your information, create a restore point, reset your computer, create recovery media, or restore your computer to its factory state. Performing these standard procedures can return your computer to a working state faster.

IMPORTANT: If you are performing recovery procedures on a tablet, the tablet battery must be at least 70% charged before you start the recovery process.

IMPORTANT: For a tablet with a detachable keyboard, connect the tablet to the keyboard base before beginning any recovery process.

Backing up information and creating recovery media

These methods of creating recovery media and backups are available on select products only.

Using Windows tools for backing up

HP recommends that you back up your information immediately after initial setup. You can do this task either using Windows Backup locally with an external USB flash drive or using online tools.

NOTE: If computer storage is 32 GB or less, Microsoft® System Restore is disabled by default.

Using the HP Cloud Recovery Download Tool to create recovery media (select products only)

You can use the HP Cloud Recovery Download Tool to create HP Recovery media on a bootable USB flash drive.

For details:

- Go to http://www.hp.com, search for HP Cloud Recovery, and then select the result that matches the type of computer that you have.

NOTE: If you cannot create recovery media yourself, contact support to obtain recovery discs. Go to http://www.hp.com/support, select your country or region, and then follow the on-screen instructions.

IMPORTANT: HP recommends that you follow the Restoring and recovery methods on page 67 to restore your computer before you obtain and use the HP recovery discs. Using a recent backup can return your machine to a working state sooner than using the HP recovery discs. After the system is restored, reinstalling all the operating system software released since your initial purchase can be a lengthy process.

Restoring and recovering your system

You have several tools available to recover your system both within and outside of Windows if the desktop cannot load.

HP recommends that you attempt to restore your system using the Restoring and recovery methods on page 67.

Creating a system restore

System Restore is available in Windows. The System Restore software can automatically or manually create restore points, or snapshots, of the system files and settings on the computer at a particular point.

When you use System Restore, it returns your computer to its state at the time you made the restore point. Your personal files and documents should not be affected.

Restoring and recovery methods

After you run the first method, test to see whether the issue still exists before you proceed to the next method, which might now be unnecessary.

1. Run a Microsoft System Restore.
2. Run Reset this PC.

NOTE: The options **Remove everything** and then **Fully clean the drive** can take several hours to complete and leave no information on your computer. It is the safest way to reset your computer before you recycle it.

3. Recover using HP Recovery media. For more information, see Recovering using HP Recovery media on page 67.

For more information about the first two methods, see the Get Help app:

- Select the **Start** button, select **All apps**, select the **Get Help** app, and then enter the task you want to perform.

NOTE: You must be connected to the internet to access the Get Help app.

Recovering using HP Recovery media

You can use HP Recovery media to recover the operating system and drivers that were installed at the factory. On select products, you can create recovery media on a bootable USB flash drive using the HP Cloud Recovery Download Tool.

For details, see Using the HP Cloud Recovery Download Tool to create recovery media (select products only) on page 66.

NOTE: If you cannot create recovery media yourself, contact support to obtain recovery discs. Go to http://www.hp.com/support, select your country or region, and then follow the on-screen instructions.

To recover your system:

- Insert the HP Recovery media, and then restart the computer.

NOTE: HP recommends that you follow the Restoring and recovery methods on page 67 to restore your computer before you obtain and use the HP recovery discs. Using a recent backup can return your machine to a working state sooner than using the HP recovery discs. After the system is restored, reinstalling all the operating system software released since your initial purchase can be a lengthy process.

Changing the computer boot order

If your computer does not restart using the HP Recovery media, you can change the computer boot order, which is the order of devices listed in BIOS for startup information. You can select an optical drive or a USB flash drive, depending on the location of your HP Recovery media.

IMPORTANT: For a tablet with a detachable keyboard, connect the tablet to the keyboard base before beginning these steps.

To change the boot order:

1. Insert the HP Recovery media.
2. Access the system **Startup** menu.
   - For computers or tablets with keyboards attached, turn on or restart the computer or tablet, quickly press esc, and then press f9 for boot options.
   - For tablets without keyboards, turn on or restart the tablet, quickly press and hold the volume up button, and then select **f9**.

     – or –

     Turn on or restart the tablet, quickly press and hold the volume down button, and then select **f9**.
3. Select the optical drive or USB flash drive from which you want to boot, and then follow the on-screen instructions.

Using HP Sure Recover (select products only)

Select computer models are configured with HP Sure Recover, a PC operating system (OS) recovery solution built into the hardware and software. HP Sure Recover can fully restore the HP OS image without installed recovery software.

Using HP Sure Recover, an administrator or user can restore the system and install:

- Latest version of the operating system
- Platform-specific device drivers
- Software applications, in the case of a custom image

To access the latest documentation for HP Sure Recover, go to http://www.hp.com/support. Follow the on-screen instructions to find your product and locate your documentation.

9 Specifications

This chapter provides specifications for your computer system.

Computer specifications

This section provides specifications for your computer. When you travel with your computer, the computer dimensions and weights, as well as input power ratings and operating specifications, provide helpful information.

Table 9-1 Computer specifications

	Metric	U.S.
Dimensions		
Width	**357.4 mm**	14.1 in
Depth	**223.5 mm**	8.8 in
Height	**18.3 mm**	0.7 in
Weight	**1826.3 g**	4.0 lb
Input power		
Operating voltage and current	19.5 V DC @ 3.33 A - 65 W	
Temperature		
Operating	**5°C to 35°C**	41°F to 95°F
Nonoperating	**-20°C to 60°C**	-4°F to 140°F
Relative humidity (noncondensing)		
Operating	10% to 90%	
Nonoperating	5% to 95%	
Maximum altitude (unpressurized)		
Operating	**-15 m to 3,048 m**	-50 ft to 10,000 ft
Nonoperating	**-15 m to 12,192 m**	-50 ft to 40,000 ft
NOTE: Applicable product safety standards specify thermal limits for plastic surfaces. The device operates well within this range of temperatures.		

Display specifications

This section provides specifications for your display.

Table 9-2 Display specifications

	Metric	U.S.
Active diagonal size	**39.6 cm**	15.6 in

Table 9-2 Display specifications (continued)

	Metric	U.S.
Resolution	1920 × 1080	
Surface treatment	BrightView (OLED)	
	Antiglare (FHD)	
Brightness	400 nits (OLED)	
	250 nits (FHD)	
Viewing angle	UWVA	
Backlight	OLED	
	WLED	
Display panel interface	eDP	

Solid-state drive specifications

This section provides specifications for your solid-state drives.

Table 9-3 Solid-state drive specifications

	256 GB*	512 GB*	1 TB*
Dimensions			
Height	1.0 mm	1.0 mm	1.0 mm
Length	50.8 mm	50.8 mm	50.8 mm
Width	28.9 mm	28.9 mm	28.9 mm
Weight	< 10 g	< 10 g	< 10 g
Interface type	PCIe	PCIe	PCIe
Ready time, maximum (to not busy)	1.0 ms	< 1.0 ms	1.0 ms
Access times, logical	0.1 ms	0.1 ms	0.1 ms
Transfer rate			
Sequential read	up to 2150 MBps	up to 2150 MBps	up to 2150 MBps
Random read	Up to 300,000 IOPs	Up to 300,000 IOPs	Up to 300,000 IOPs
Sequential write	up to 1550 MBps	up to 1550 MBps	up to 1550 MBps
Random write	Up to 100,000 IOPs	Up to 100,000 IOPs	Up to 100,000 IOPs
Total logical sectors	468,883,296	1,000,215,216	1,500,336,388
Operating temperature	**0°C to 70°C** (32°F to 158°F)		

*1 GB = 1 billion bytes when referring to hard drive storage capacity. Actual accessible capacity is less. Actual drive specifications might differ slightly.

NOTE: Certain restrictions and exclusions apply. Contact support for details.

10 Power cord set requirements

This chapter provides power cord requirements for countries and regions.

The wide-range input feature of the computer permits it to operate from any line voltage from 100 V AC to 120 V AC, or from 220 V AC to 240 V AC.

The three-conductor power cord set included with the computer meets the requirements for use in the country or region where the equipment is purchased.

Power cord sets for use in other countries or regions must meet the requirements of the country and region where the computer is used.

Requirements for all countries

These power cord requirements are applicable to all countries and regions.

- The length of the power cord set must be at least **1.0 m** (3.3 ft) and no more than **2.0 m** (6.5 ft).
- All power cord sets must be approved by an acceptable accredited agency responsible for evaluation in the country or region where the power cord set will be used.
- The power cord sets must have a minimum current capacity of 10 A and a nominal voltage rating of 125 V AC or 250 V AC, as required by the power system of each country or region.
- The appliance coupler must meet the mechanical configuration of an EN 60 320/IEC 320 Standard Sheet C13 connector for mating with the appliance inlet on the back of the computer.

Requirements for specific countries and regions

To determine power cord requirements for specific countries and regions, use this table.

Table 10-1 Power cord requirements for specific countries and regions

Country/region	Accredited agency	Applicable note number
Argentina	IRAM	1
Australia	SAA	1
Austria	OVE	1
Belgium	CEBEC	1
Brazil	ABNT	1
Canada	CSA	2
Chile	IMQ	1
Denmark	DEMKO	1
Finland	FIMKO	1
France	UTE	1

Table 10-1 **Power cord requirements for specific countries and regions (continued)**

Country/region	Accredited agency	Applicable note number
Germany	VDE	1
India	BIS	1
Israel	SII	1
Italy	IMQ	1
Japan	JIS	3
Netherlands	KEMA	1
New Zealand	SANZ	1
Norway	NEMKO	1
People's Republic of China	CCC	4
Saudi Arabia	SASO	7
Singapore	PSB	1
South Africa	SABS	1
South Korea	KTL	5
Sweden	SEMKO	1
Switzerland	SEV	1
Taiwan	BSMI	6
Thailand	TISI	1
United Kingdom	ASTA	1
United States	UL	2

1. The flexible cord must be Type HO5VV-F, three-conductor, 0.75 mm² conductor size. Power cord set fittings (appliance coupler and wall plug) must bear the certification mark of the agency responsible for evaluation in the country or region where it will be used.
2. The flexible cord must be Type SVT/SJT or equivalent, No. 18 AWG, three-conductor. The wall plug must be a two-pole grounding type with a NEMA 5-15P (15 A, 125 V AC) or NEMA 6-15P (15 A, 250 V AC) configuration. CSA or C-UL mark. UL file number must be on each element.
3. The appliance coupler, flexible cord, and wall plug must bear a T mark and registration number in accordance with the Japanese Dentori Law. The flexible cord must be Type VCTF, three-conductor, 0.75 mm² or 1.25 mm² conductor size. The wall plug must be a two-pole grounding type with a Japanese Industrial Standard C8303 (7 A, 125 V AC) configuration.
4. The flexible cord must be Type RVV, three-conductor, 0.75 mm² conductor size. Power cord set fittings (appliance coupler and wall plug) must bear the CCC certification mark.
5. The flexible cord must be Type H05VV-F three-conductor, 0.75 mm² conductor size. KTL logo and individual approval number must be on each element. Approval number and logo must be printed on a flag label.
6. The flexible cord must be Type HVCTF three-conductor, 1.25 mm² conductor size. Power cord set fittings (appliance coupler, cable, and wall plug) must bear the BSMI certification mark.
7. For 127 V AC, the flexible cord must be Type SVT or SJT 3-conductor, 18 AWG, with plug NEMA 5-15P (15 A, 125 V AC), with UL and CSA or C-UL marks. For 240 V AC, the flexible cord must be Type H05VV-F three-conductor, 0.75 mm² or 1.00 mm² conductor size, with plug BS 1363/A with BSI or ASTA marks.

11 Recycling

When a nonrechargeable or rechargeable battery has reached the end of its useful life, do not dispose of the battery in general household waste. Follow the local laws and regulations in your area for battery disposal.

HP encourages customers to recycle used electronic hardware, HP original print cartridges, and rechargeable batteries. For more information about recycling programs, see the HP website at http://www.hp.com/recycle.

Index

A

AC adapter and battery light, identifying 5, 6
AC adapter, spare part number 19
action key, identifying 12
ambient light sensor, identifying 9
antenna
  illustrated 19
  spare part number 19
audio-out (headphone)/audio-in (microphone) combo jack, identifying 7
audio, product description 2

B

backup, creating 66
backups 66
battery
  illustrated 18
  spare part number 18
BIOS
  determining version 57
  downloading an update 58
  starting the Setup Utility 57
  updating 57
Bluetooth label 14
boot order, changing 68
bottom components 13
bottom cover
  illustrated 18
  removal 30
  spare part number 30
  spare part numbers 18
buttons
  left touchpad 9, 10
  right touchpad 9, 10

C

camera
  identifying 9
camera cable
  illustrated 19
  spare part number 19
camera light, identifying 8
camera module
  illustrated 19
  spare part number 19
camera privacy cover, identifying 9
caps lock light 11
caring for your computer 25
cautions
  electrostatic discharge 21, 22
cleaning your computer 25
  caring for wood veneer 27
  disinfecting 26
  HP Easy Clean 25
  removing dirt and debris 25
components
  bottom 13
  display 8
  keyboard area 9
  left side 7
  lights 10
  rear 13
  right side 5
  touchpad 9, 10
computer major components 16
computer specifications 69
connectors
  power 5, 6
control zone 9

D

digital pen, product description 3
display
  specifications 69
display assembly
  subcomponents 18
display back cover
  illustrated 19
  spare part numbers 19
display components 8
display panel
  illustrated 18
  product description 1
  spare part numbers 18
display panel adhesive strips
  spare part number 19
display panel cable
  illustrated 19
  spare part number 19

E

electrostatic discharge (ESD) 21, 22
  preventing damage 21-23
esc key, identifying 12

F

fan
  illustrated 17
  spare part numbers 17
fans
  removal 39
  spare part number 39
fn key, identifying 12

G

graphics controller, product description 1
grounding methods 21-23
guidelines
  packaging 21, 27
  transporting 21, 27
  workstation 21

H

hard drive
  product description 2
  specifications 69
HDMI port
  identifying 5, 6
heat sink
  illustrated 17
  removal 40
  spare part number 40
  spare part numbers 17
hinge
  illustrated 19
  spare part numbers 19
hinge covers
  illustrated 19
  spare part numbers 19
HP PC Hardware Diagnostics UEFI
  downloading 63
  failure ID code 62
  HP Hotkey Support software 63
  starting 62, 63

using 62
HP PC Hardware Diagnostics Windows
accessing 60, 61
downloading 61
failure ID code 60
installing 62
using 60
HP Recovery media recovery 67
HP Sure Recover 68

I

illustrated parts catalog 16
infrared camera identifying 8
internal microphones, identifying 8
IR board
illustrated 17
removal 42
spare part numbers 17, 42

J

jacks
audio-out (headphone)/audio-in (microphone) 7

K

keyboard product description 3
keys
action 12
esc 12
fn 12
power 12
Windows 12

L

labels
Bluetooth 14
regulatory 14
serial number 14
service 14
wireless certification 14
WLAN 14
left control zone, identifying 9
left side components 7
lights
AC adapter and battery 5, 6
camera 8
caps lock 11
microphone mute 11
mute 11
power 11
touchpad 9
low blue light mode 8

M

memory module product description 2
microphone product description 2
microphone mute light, identifying 11
model name 1
multimedia card, product description 3
mute light, identifying 11

O

OLED antenna kit spare part number 19
OLED board spare part number 19
OLED thermal pad spare part number 19
operating system, product description 4

P

packaging guidelines 21, 27
pointing device, product description 3
ports
HDMI 5, 6
product description 3
USB SuperSpeed 7
USB SuperSpeed with HP Sleep and Charge 6
USB Type-C power connector and SuperSpeed port with HP Sleep and Charge 6
USB Type-C power connector and Thunderbolt port with HP Sleep and Charge 5
power connector identifying 5, 6
power cord
requirements for all countries 71
requirements for specific countries and regions 71
set requirements 71
spare part numbers 20
power key, identifying 12
power light, identifying 11
power requirements, product description 3
primary storage product description 2
processor product description 1
processor, product description 1
product description
audio 2
digital pen 3
display panel 1
graphics controller 1
hard drive 2
keyboard 3
memory module 2
microphone 2
multimedia card 3
operating system 4
pointing device 3
ports 3
power requirements 3
primary storage 2
product name 1
security 3
sensors 4
serviceability 4
solid-state drive 2
video 2
wireless 2
product name 1
product name and number, computer 14

R

recovery 66
discs 67
media 67
USB flash drive 67
recovery media 66
creating using HP Cloud Recovery Download Tool 66
creating using Windows tools 66
regulatory information
regulatory label 14
wireless certification labels 14
Remote HP PC Hardware Diagnostics UEFI settings
customizing 65
using 64
removal and replacement procedures 30

solid-state drive 33
restoring 66
restoring and recovery methods 67
right control zone, identifying 9
right side components 5

S

security, product description 3
sensors, product description 4
serial number, computer 14
service labels, locating 14
serviceability, product description 4
slots
memory card reader 7
microSD memory card reader 7
solid-state drive
illustrated 17
product description 2
removal and replacement 33
spare part numbers 17
specifications 70
speaker
illustrated 18
removal 36
spare part number 18, 36
speakers, identifying 13
special keys
identifying 11
using 11
specifications
computer 69
display 69
hard drive 69
solid-state drive 70
static electricity 21, 22
support information 28
system board
illustrated 17
removal 43
spare part numbers 17, 43
system restore 67
system restore point, creating 66

T

top cover
spare part numbers 56
touch control board
spare part number 19
touchpad
illustrated 17
removal 37
settings 9
spare part numbers 17, 37
touchpad buttons
identifying 9, 10
touchpad components 9
touchpad light, identifying 9
touchpad settings, adjusting 9
touchpad zone, identifying 9, 10
transporting guidelines 21, 27
traveling with the computer 14

U

USB SuperSpeed port with HP Sleep and Charge, identifying 6
USB SuperSpeed port, identifying 7
USB Type-C power connector and SuperSpeed port with HP Sleep and Charge, identifying 6
USB Type-C power connector and Thunderbolt port with HP Sleep and Charge, identifying 5

V

vent, identifying 13
video, product description 2

W

Windows
backup 66
recovery media 66
system restore point 66
Windows key, identifying 12
Windows tools, using 66
wireless antennas, identifying 8
wireless certification label 14
wireless, product description 2
WLAN antenna kit
illustrated 19
spare part number 19
WLAN antennas, identifying 8
WLAN device 14
WLAN label 14
WLAN module
removal 35
spare part numbers 35
workstation guidelines 21