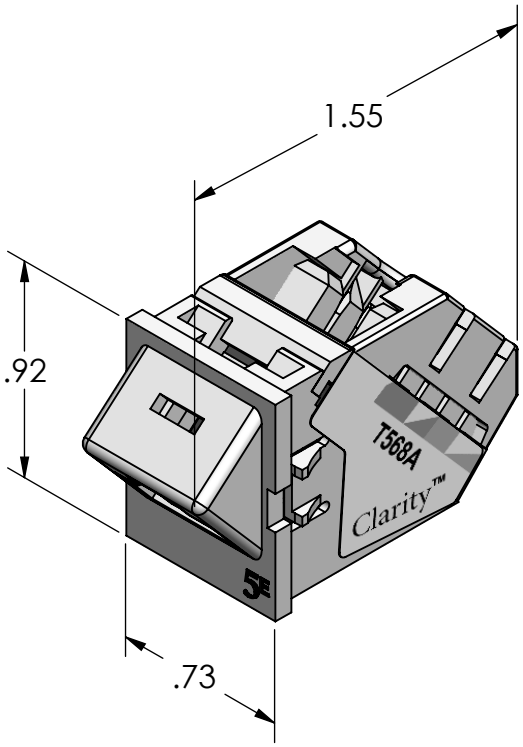

DIMENSIONS IN INCHES

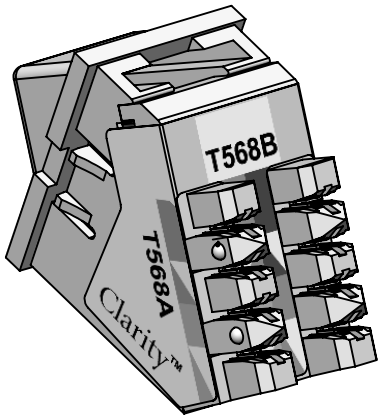

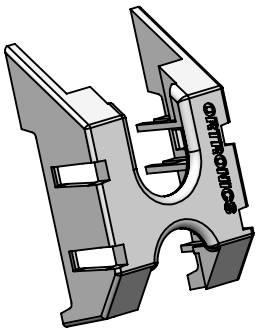

PART NO.	COLOR
TJ5E45	FOG WHITE
TJ5E45-00	BLACK
TJ5E45-13	ELEC. IVORY
TJ5E45-36	MED. BLUE
TJ5E45-42	MED. RED
TJ5E45-43	DK. ORANGE
TJ5E45-44	DK. YELLOW
TJ5E45-45	DK. GREEN
TJ5E45-68	WIREMOLD LT. GREY
TJ5E45-78	WIREMOLD DK. GREY
TJ5E45-88	CLOUD WHITE
TJ5E45-99	WIREMOLD IVORY

NOTE: IF * NEXT TO PART NUMBER, MINIMUM QUANTITIES REQUIRED.
CONTACT YOUR CUSTOMER SERVICE REPRESENTATIVE (CSR)

*** NOTICE ***
THIS DOCUMENT CONTAINS CONFIDENTIAL AND/OR PROPRIETARY INFORMATION INTENDED FOR USE ONLY BY THE INDIVIDUAL(S) PROVIDED. NEITHER THIS DOCUMENT, NOR ANY INFORMATION CONTAINED HEREIN, MAY BE COPIED, DISTRIBUTED, DISCLOSED TO ANY THIRD PARTY OR USED IN ANY MANNER OTHER THAN FOR WHICH IT HAS BEEN PROVIDED, WITHOUT THE PRIOR WRITTEN CONSENT OF ORTRONICS, INC. MANUFACTURING RELEASE, PRODUCT SPECIFICATIONS AND STANDARDS ARE SUBJECT TO CHANGE WITHOUT NOTICE.

ORTRONICS®
125 EUGENE O'NEILL DRIVE
NEW LONDON, CT 06320
TEL: 860-445-3800
FAX: 860-405-2990
WWW.ORTRONICS.COM

TITLE

TRACJACK, 45 DEG, CLARITY
CAT 5E, 8P8C, 568A/B

	NAME	DATE
DWN	HATHAWAY	01/24/03
CHK	S. LEVESQUE	09/02/05
APPR	M. MARTICH	09/02/05

SIZE	CAD FILE	DWG NO	REV
A	TJ5E45XXC	OR-TJ5E45-XX	05

SCALE	WEIGHT	SHEET
NONE		1 OF 1