Maintenance and Service Guide

SUMMARY

This guide provides information about spare parts, removal and replacement of parts, security, backing up, and more.

Legal information

© Copyright 2023 HP Development Company, L.P.

AMD and Radeon are trademarks of Advanced Micro Devices, Inc. Bluetooth is a trademark owned by its proprietor and used by HP Inc. under license. Intel, Optane, and Xeon are trademarks of Intel Corporation or its subsidiaries in the U.S. and/or other countries. NVIDIA, GeForce RTX, and RTX are trademarks and/or registered trademarks of NVIDIA Corporation in the U.S. and other countries. Microsoft and Windows are either registered trademarks or trademarks of Microsoft Corporation in the United States and/or other countries. USB Type-C and USB-C are registered trademarks of USB Implementers Forum. DisplayPort and the DisplayPort logo are trademarks owned by the Video Electronics Standards Association (VESA) in the United States and other countries.

The information contained herein is subject to change without notice. The only warranties for HP products and services are set forth in the express warranty statements accompanying such products and services. Nothing herein should be construed as constituting an additional warranty. HP shall not be liable for technical or editorial errors or omissions contained herein.

First Edition: September 2023

Document Part Number: N59142-001

Product notice

This guide describes features that are common to most models. Some features may not be available on your computer.

Not all features are available in all editions or versions of Windows. Systems may require upgraded and/or separately purchased hardware, drivers, software or BIOS update to take full advantage of Windows functionality. Windows 10 is automatically updated, which is always enabled. ISP fees may apply and additional requirements may apply over time for updates. Go to http://www.microsoft.com for details.

To access the latest user guides, go to http://www.hp.com/support, and follow the instructions to find your product. Then select **Manuals**.

Software terms

By installing, copying, downloading, or otherwise using any software product preinstalled on this computer, you agree to be bound by the terms of the HP End User License Agreement (EULA). If you do not accept these license terms, your sole remedy is to return the entire unused product (hardware and software) within 14 days for a full refund subject to the refund policy of your seller.

For any further information or to request a full refund of the price of the computer, please contact your seller.

Not all features are available in all editions of Windows. This computer may require upgraded and/or separately purchased hardware, drivers and/or software to take full advantage of Windows functionality. Go to http://www.microsoft.com for details.

Table of contents

1 About this guide 1

2 Computer features 2

Front 2

Rear 3

Top 4

Serial number location 4

Power rating label location 5

Product specifications 5

3 Illustrated parts catalog 6

Computer major components 6

Mass storage devices 8

Miscellaneous parts 8

4 Routine care, drive guidelines, and disassembly preparation 11

Electrostatic discharge information 11

Generating static electricity 11

Preventing electrostatic damage to equipment 12

Personal grounding methods and equipment 12

Grounding the work area 13

Recommended materials and equipment 13

Operating guidelines 14

Routine care 14

General cleaning safety precautions 14

Removing dirt and debris from your computer 15

Cleaning your computer with a disinfectant 15

Cleaning the computer case 16

Cleaning the keyboard 16

Cleaning the monitor 17

Cleaning the mouse 17

Service considerations 17

Tools and software requirements 17

Screws 18

Cables and connectors 18

Hard drives 18

Lithium coin cell battery 18

SATA hard drives 19

Cable management 19

5 Removal and replacement procedures 21
Preparation for disassembly 21
Removing the computer from the rack 21
Rails 22
Handle with thumbscrew 23
Front bezel 24
Power supply 25
Drive filler panel 26
Access panel 26
3.5 inch hard drive 27
M.2 module 29
Interlock switch 31
Power supply filler panel 31
Front I/O assembly 32
Plastic frame/fan duct 33
Memory modules (DIMMs) 34
Heat sink 36
Processor 37
PCIe dual-slot riser assembly 38
PCIe single-slot riser assembly 40
Battery 43
Solid-state drive 44
System board 45
System board components 47
Cable support brackets 49
Fans 49
Hard drive connectors 50
6 Troubleshooting without diagnostics 53
Before you call for technical support 53
Helpful hints 54
Diagnostic LEDs and audible codes 54
Solving general problems 55
Cannot access the Computer Setup (F10) Utility when booting the computer 55
Computer appears locked up and will not turn off when the power button is pressed 56
Computer will not respond to keyboard or mouse 56
Computer date and time display is incorrect 56
Poor performance 56
Computer powered off automatically and the power light blinks red four times and then white two times 57

Solving power problems 57
Three red blinks and seven white blinks with beeps 57
Four red blinks and two white blinks with beeps 58
Power light blinks red three times and white four times 58
Solving hard drive problems 58
Hard drive error occurs 58
Disk drive transaction problem 59
Drive not found (identified) 59
Nonsystem disk/NTLDR missing message 59
Computer will not boot from hard drive 60
Computer seems to be locked up 60
Solving hardware installation problems 60
A new device is not recognized as part of the system 61
Computer will not start 61
Three red blinks then two white blinks 61
Solving network problems 62
Network driver does not detect network controller 62
Network status link light never blinks 62
Diagnostics reports a failure 63
Diagnostics passes, but the computer does not communicate with the network 63
Network controller stopped working when an expansion board was added to the computer 63
Network controller stops working without apparent cause 63
Cannot connect to network server when attempting remote system installation 64
System setup utility reports unprogrammed EEPROM 64
Solving memory problems 64
System will not boot or does not function properly after installing additional memory modules 64
Out of memory error 65
Memory count during POST is wrong 65
Insufficient memory error during operation 65
Solving USB flash drive problems 65
USB flash drive is not seen as a drive letter in Windows 65
USB flash drive not found (identified) 65
System will not boot from USB flash drive 66
The computer boots to DOS after making a bootable flash drive 66
Solving internet access problems 66
Unable to connect to the internet 66
Cannot automatically launch internet programs 67
Solving software problems 67
Computer will not start up and the HP logo does not appear 67
“Illegal Operation has Occurred” error message is displayed 67
7 Computer Setup (F10) Utility 68
Using Computer Setup (F10) Utilities 68
Computer Setup—Main 69
Computer Setup—Security 73
Computer Setup—Advanced 77

8 Password security and resetting CMOS 85
Changing a setup or power-on password 85
Deleting a setup or power-on password 85
Clearing and resetting the CMOS 86
9 POST error messages 88
POST numeric codes and text messages 88
Interpreting system validation diagnostic front panel LEDs and audible codes 93
10 Backing up, restoring, and recovering 97
Backing up information and creating recovery media 97
Using Windows tools for backing up 97
Using the HP Cloud Recovery Download Tool to create recovery media (select products only) 97
Restoring and recovering your system 98
Creating a system restore 98
Restoring and recovery methods 98
Recovering using HP Recovery media 98
Changing the computer boot order 99
Using HP Sure Recover (select products only) 99
11 Using HP PC Hardware Diagnostics 100
Using HP PC Hardware Diagnostics Windows (select products only) 100
Using an HP PC Hardware Diagnostics Windows hardware failure ID code 100
Accessing HP PC Hardware Diagnostics Windows 100
Accessing HP PC Hardware Diagnostics Windows from HP Help and Support (select products only) 100
Accessing HP PC Hardware Diagnostics Windows from HP Support Assistant 101
Accessing HP PC Hardware Diagnostics Windows from the Start menu (select products only) 101
Downloading HP PC Hardware Diagnostics Windows 101
Downloading the latest HP PC Hardware Diagnostics Windows version from HP 101
Downloading the HP PC Hardware Diagnostics Windows from the Microsoft Store 101
Downloading HP Hardware Diagnostics Windows by product name or number (select products only) 102
Installing HP PC Hardware Diagnostics Windows 102
Using HP PC Hardware Diagnostics UEFI 102
Using an HP PC Hardware Diagnostics UEFI hardware failure ID code 102
Starting HP PC Hardware Diagnostics UEFI 103
Downloading HP PC Hardware Diagnostics UEFI to a USB flash drive 103
Downloading the latest HP PC Hardware Diagnostics UEFI version 103
Downloading HP PC Hardware Diagnostics UEFI by product name or number (select products only) 103
Using Remote HP PC Hardware Diagnostics UEFI settings (select products only) 104
Downloading Remote HP PC Hardware Diagnostics UEFI 104
Downloading the latest Remote HP PC Hardware Diagnostics UEFI version 104
Downloading Remote HP PC Hardware Diagnostics UEFI by product name or number 104
Customizing Remote HP PC Hardware Diagnostics UEFI settings 104
12 Statement of memory volatility 106

Current BIOS steps 106
Nonvolatile memory usage 108
Questions and answers 110
Using HP Sure Start (select products only) 112
13 Specifications 113
Index 114

1 About this guide

This guide provides basic information for using and upgrading this product.

WARNING! Indicates a hazardous situation that, if not avoided, **could** result in serious injury or death.

CAUTION: Indicates a hazardous situation that, if not avoided, **could** result in minor or moderate injury.

IMPORTANT: Indicates information considered important but not hazard-related (for example, messages related to property damage). Warns the user that failure to follow a procedure exactly as described could result in loss of data or in damage to hardware or software. Also contains essential information to explain a concept or to complete a task.

NOTE: Contains additional information to emphasize or supplement important points of the main text.

TIP: Provides helpful hints for completing a task.

2 Computer features

This chapter provides you with an overview of your computer's features.

Front

To identify the front panel components, use this illustration and table.

NOTE: Your computer model might look slightly different from the illustration in this section. Please refer to the illustration that most closely matches your computer.

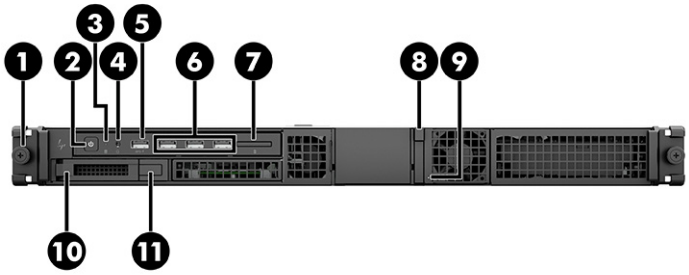

Table 2-1 Front components and their descriptions (Standard version)

Item	Icon	Component	Item	Icon	Component
(1)		Rack pull screw	(7)		Memory card reader (select products only)
(2)		Power button	(8)		Power supply release button NOTE: You can remove or replace power supplies when the computer is on. NOTE: The system can be configured with either one or two power supplies.
(3)		HDD activity light	(9)		Power supply light
(4)		Audio-out (headphone)/Audio-in (microphone) combo jack	(10)		Hard drive pull handle NOTE: You cannot remove or replace hard drives while the computer is on.
(5)		USB 5 Gbps port with HP Sleep and Charge	(11)		Hard drive pull handle eject button

Table 2-1 Front components and their descriptions (Standard version) (continued)

Item	Icon	Component	Item	Icon	Component
(6)	SS	USB 10 Gbps ports (3)			

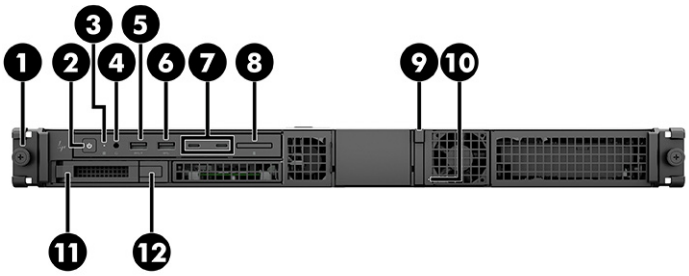

Table 2-2 Front components and their descriptions (Premium version)

Item	Icon	Component	Item	Icon	Component
(1)		Rack pull screw	(7)		USB Type-C® 10 Gbps ports (2)
(2)		Power button	(8)		Memory card reader (select products only)
(3)		HDD activity light	(9)		Power supply release button NOTE: You can remove or replace power supplies when the computer is on.
(4)		Audio-out (headphone)/Audio-in (microphone) combo jack	(10)		Power supply light
(5)	SS	USB 5 Gbps port with HP Sleep and Charge	(11)		Hard drive pull handle NOTE: You cannot remove or replace hard drives while the computer is on.
(6)	SS	USB 5 Gbps port	(12)		Hard drive pull handle eject button

Rear

To identify the rear panel components, use this illustration and table.

NOTE: Your computer model might look slightly different from the illustration in this section.

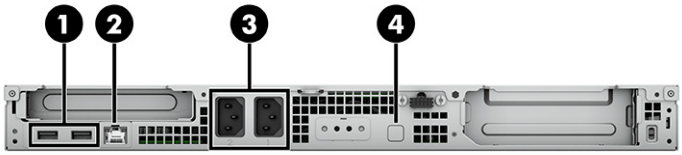

Table 2-3 Rear components and their descriptions

Item	Icon	Component	Item	Icon	Component
(1)		USB ports (2)	(3)		Power connectors (2)
(2)		RJ-45 (network) jack	(4)		Power button

NOTE: The labels for the rear panel connectors use industry-standard icons and colors.

Top

To identify the top cover components, use this illustration and table.

IMPORTANT: Your computer will not turn on if the top is open or removed.

NOTE: Your computer model might look slightly different from the illustration in this section.



Table 2-4 Top components and their descriptions

Item	Component	Description
(1)	Release latch	Allows access to the interior of the computer.
(2)	Rack pull screws (2)	Used to remove the computer from a rack mount.

Serial number location

Each computer has a unique serial number and a product ID number that are located on a pullout tag on the front of the computer. Keep these numbers available when contacting customer service for assistance.

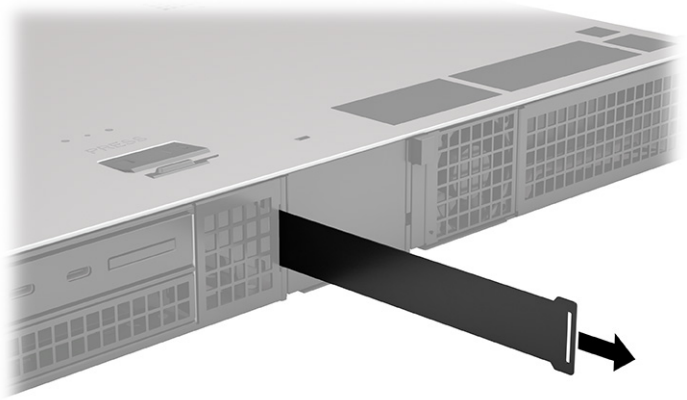

Power rating label location

The power rating label is located on the bottom of the computer.

Product specifications

Read this section to learn where to find the technical specifications about your computer.

To find the QuickSpecs for your product, go to http://www.hp.com/go/quickspecs, and then select the **Search all QuickSpecs** link. Type your model name in the search box, and then select **Go**.

You can also go to http://www.hp.com/support, and follow the instructions to find your product. Select **Product Information**, and then select your computer specifications.

3 Illustrated parts catalog

Use this information to determine the spare parts that are available for the computer.

NOTE: HP continually improves and changes product parts. For complete and current information about supported parts for your computer, go to https://partsurfer.hp.com/partsurfer/, select your country or region, and then follow the on-screen instructions.

Computer major components

To identify the computer major components, use this illustration and table.

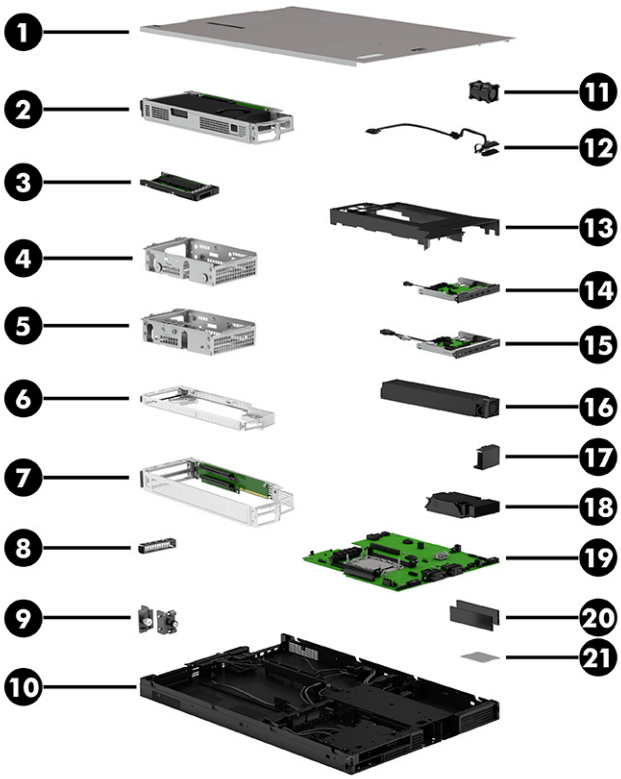

Table 3-1 Major components and descriptions

Item	Description
(1)	Access panel
(2)	PCIe dual-slot riser option card
(3)	2.5 inch M.2 adapter carrier
(4)	3.5 inch drive cage adapter
(5)	2.5 inch dual drive cage adapter

Table 3-1 Major components and descriptions (continued)

Item	Description
(6)	**PCIe single-slot riser bracket** (riser card is available only as a separate spare part)
	PCIe single-slot riser card (not illustrated)
(7)	**PCIe dual-slot riser bracket** (riser card is available only as a separate spare part)
	PCIe dual-slot riser card (not illustrated)
(8)	**2.5 inch M.2 adapter carrier filler panel** (covers empty hard drive supply bay)
(9)	**Handle with thumbscrew**
(10)	**Chassis**
(11)	**Fan assembly** (includes numbering stickers)
(12)	**Hard drive connectors and cables**
	For hard drive bays 0–1 (not shown)
	For hard drive bays 2–3 (optional)
(13)	**Plastic frame/fan duct**
(14)	**Front I/O assembly with speaker, entry**
(15)	**Front I/O assembly with speaker, premium** (optional)
(16)	**Power supply** (675 W)
(17)	**Power supply filler panel** (covers empty power supply bay)
(18)	**Heat sink**
(19)	**System board** (includes replacement thermal material)
(20)	**Memory modules** (DDR5 4800, ECC)
	256 GB
	128 GB
	64 GB
	32 GB
	16 GB
(21)	**Processor** (include replacement thermal material)
	Intel Xeon® W3-2423 (6 core, 2.10 GHz, 120 W)
	Intel Xeon W3 - 2425 (6 core, 3.00 GHz, 130 W)
	Intel Xeon W3 - 2435 (8 core, 3.10 GHz, 165 W)
	Intel Xeon W5 - 2445 (10 core, 3.10 GHz, 175 W)
	Intel Xeon W5 - 2455X (12 core, 3.2 GHz, 200 W)
	Intel Xeon W5 - 2465X (16 core, 3.10 GHz, 200 W)
	Intel Xeon W7 - 2475X (20 core, 2.6 GHz, 225 W)
	Intel Xeon W7 - 2495X (24 core, 2.5 GHz, 225 W)

Mass storage devices

To identify the available hard drives and solid-state drives, use this table.



Table 3-2 **Mass storage devices and their descriptions**

	Description
(1)	**Solid-state drives (M.2 2280, PCIe)**
	4 TB, PCIe-4 × 4
	4 TB, PCIe-4 × 4, self-encrypting drive (SED)
	2 TB, PCIe-4 × 4, TLC
	2 TB, PCIe-4 × 4, self-encrypting drive (SED)
	1 TB, PCIe-4 × 4, TLC
	1 TB, PCIe-4 × 4, self-encrypting drive (SED)
	512 GB, PCIe-4 × 4, TLC
	512 GB, PCIe-4 × 4, self-encrypting drive (SED)
(2)	**Hard drive**, 3.5 inch
	12 TB, 7200 rpm, 3.5 in
	8 TB, 7200 rpm, 3.5 in
	4 TB, 7200 rpm, 3.5 in
	2 TB, 7200 rpm, 3.5 in
	1 TB, 7200 rpm, 3.5 in

Miscellaneous parts

To identify the various computer parts, use this table.

Table 3-3 **Miscellaneous parts and their descriptions**

Description
Front bezel with security keys
Solid-state drive, PCIe x8 dual M.2 adapter (includes bracket)
Graphics cards

Table 3-3 Miscellaneous parts and their descriptions (continued)

Description
AMD® Radeon™ Pro W6800
AMD Radeon Pro x5xxx
AMD Radeon Pro x6xxx
NVIDIA® GeForce RTX™ 3060
NVIDIA GeForce RTX 3070
NVIDIA GeForce RTX 4060
NVIDIA RTX™ 6000
NVIDIA RTX A2000
NVIDIA RTX A4000
NVIDIA RTX A4500
NVIDIA RTX A5000
NVIDIA RTX A6000
NVIDIA RTX x2xxx
NVIDIA RTX x4xxx
NVIDIA RTX x5xxx
NVIDIA T1000
NVIDIA T400
NVIDIA x1xxx
NVIDIA x4xxx
NVIDIA x8xxx
Network interface controller (NIC)
AT-2911T/2-901 Dual-Port 1 GbE
Intel i350-T4 Quad-Port 1 Gb
Intel X550 Dual-Port 10 G Base-T
Intel X550-T2 10 GbE Dual-Port
NVIDIA ConnectX-6 DX Dual-Port 10/25 GbE
Cable
HDD LED
Graphics power, 6 pin-8 pin
Graphics power, 8 pin
Graphics power, 8 plus 6
Front USB 3.0
Front UI
Front IO

Table 3-3 Miscellaneous parts and their descriptions (continued)

Description
Front LED
Audio extension
Adapter, Mini DisplayPort®-to-DisplayPort
Adapter, DisplayPort-to-DVI
Mouse, USB
Keyboard, USB
Power cord

4 Routine care, drive guidelines, and disassembly preparation

This information provides general service information for the computer. Adherence to the procedures and precautions is essential for proper service.

IMPORTANT: When the computer is plugged into an AC power source, DC voltage is always applied to the system board. You must disconnect the power cord from the power source before opening the computer to prevent electric shock, system board, or component damage.

Electrostatic discharge information

A sudden discharge of static electricity from your finger or other conductor can destroy static-sensitive devices or microcircuitry. Often the spark is neither felt nor heard, but damage occurs.

An electronic device exposed to electrostatic discharge (ESD) might not appear to be affected at all and can work perfectly throughout a normal cycle. The device might function normally for a while, but it has been degraded in the internal layers, reducing its life expectancy.

Networks built into many integrated circuits provide some protection, but in many cases, the discharge contains enough power to alter device parameters or melt silicon junctions.

IMPORTANT: To prevent damage to the device when you are removing or installing internal components, observe these precautions:

- Keep components in their electrostatic-safe containers until you are ready to install them.
- Before touching an electronic component, discharge static electricity by using the guidelines described in this section.
- Avoid touching pins, leads, and circuitry. Handle electronic components as little as possible.
- If you remove a component, place it in an electrostatic-safe container.

Generating static electricity

This table shows how humidity affects the electrostatic voltage levels generated by different activities. A product can be degraded by 700 V of static electricity.

- Different activities generate different amounts of static electricity.
- Static electricity increases as humidity decreases.

Table 4-1 **Static electricity occurrence based on activity and humidity**

	Relative humidity		
Event	**55%**	**40%**	**10%**

Table 4-1 Static electricity occurrence based on activity and humidity (continued)

	Relative humidity		
Walking across carpet	7,500 V	15,000 V	35,000 V
Walking across vinyl floor	3,000 V	5,000 V	12,000 V
Motions of bench worker	400 V	800 V	6,000 V
Removing DIPs (dual in-line packages) from plastic tube	400 V	700 V	2,000 V
Removing DIPs from vinyl tray	2,000 V	4,000 V	11,500 V
Removing DIPs from polystyrene foam	3,500 V	5,000 V	14,500 V
Removing bubble pack from PCB (printed circuit board)	7,000 V	20,000 V	26,500 V
Packing PCBs in foam-lined box	5,000 V	11,000 V	21,000 V
Multiple electric components can be packaged in plastic tubes, trays, or polystyrene foam.			

Preventing electrostatic damage to equipment

Many electronic components are sensitive to ESD. Circuitry design and structure determine the degree of sensitivity. The following packaging and grounding precautions are necessary to prevent static electricity damage to electronic components.

- To avoid hand contact, transport products in static-safe containers such as tubes, bags, or boxes.
- Protect all electrostatic parts and assemblies with conductive or approved containers or packaging.
- Keep electrostatic-sensitive parts in their containers until they arrive at static-free stations.
- Place items on a grounded surface before removing them from their container.
- Always be properly grounded when touching a sensitive component or assembly.
- Avoid contact with pins, leads, or circuitry.
- Place reusable electrostatic-sensitive parts from assemblies in protective packaging or conductive foam.

Personal grounding methods and equipment

Use this equipment to prevent static electricity damage to electronic components.

- **Wrist straps** are flexible straps with a maximum of 1 MΩ ±10% resistance in the ground cords. To provide proper ground, a strap must be worn snug against bare skin. The ground cord must be connected and fit snugly into the banana plug connector on the grounding mat or workstation.
- **Heel straps/Toe straps/Boot straps** can be used at standing workstations and are compatible with most types of shoes or boots. On conductive floors or dissipative floor mats, use them on both feet with a maximum of 1 MΩ ±10% resistance between the operator and ground.

Table 4-2 Static shielding protection levels

Static shielding protection levels	
Method	Voltage

Table 4-2 **Static shielding protection levels (continued)**

Static shielding protection levels	
Antistatic plastic	1,500 V
Carbon-loaded plastic	7,500 V
Metallized laminate	15,000 V

Grounding the work area

To prevent static damage at the work area, use these precautions.

- Cover the work surface with approved static-dissipative material. Provide a wrist strap connected to the work surface and properly grounded tools and equipment.
- Use static-dissipative mats, foot straps, or air ionizers to give added protection.
- Handle electrostatic sensitive components, parts, and assemblies by the case or PCB laminate. Handle them only at static-free work areas.
- Turn off power and input signals before inserting and removing connectors or test equipment.
- Use fixtures made of static-safe materials when fixtures must directly contact dissipative surfaces.
- Keep work area free of nonconductive materials such as ordinary plastic assembly aids and polystyrene foam.
- Use field service tools, such as cutters, screwdrivers, and vacuums, that are conductive.

Recommended materials and equipment

HP recommends these materials and equipment to prevent static electricity.

- Antistatic tape
- Antistatic smocks, aprons, or sleeve protectors
- Conductive bins and other assembly or soldering aids
- Conductive foam
- Conductive tabletop workstations with ground cord of 1 MΩ ±10% resistance
- Static-dissipative table or floor mats with hard tie to ground
- Field service kits
- Static awareness labels
- Wrist straps and footwear straps providing 1 MΩ ±10% resistance
- Material handling packages
- Conductive plastic bags
- Conductive plastic tubes
- Conductive tote boxes

- Opaque shielding bags
- Transparent metallized shielding bags
- Transparent shielding tubes

Operating guidelines

This information details how to prevent overheating and to help prolong the life of the computer.

- Keep the computer away from excessive moisture, direct sunlight, and extremes of heat and cold.
- Operate the computer on a sturdy, level surface. Leave a 10.2 cm (4 inch) clearance on all vented sides of the computer and above the monitor to permit the required airflow.
- Never restrict the airflow into the computer by blocking any vents or air intakes. Do not place the keyboard, with the keyboard feet down, directly against the front of the desktop unit as this also restricts airflow.
- Occasionally clean the air vents on all vented sides of the computer. Lint, dust, and other foreign matter can block the vents and limit the airflow. Be sure to unplug the computer before cleaning the air vents.
- Never operate the computer with the cover or side panel removed.
- Do not stack computers on top of each other or place computers so near each other that they are subject to each other's recirculated or preheated air.
- If the computer is to be operated within a separate enclosure, intake and exhaust ventilation must be provided on the enclosure, and the same operating guidelines listed previously still apply.
- Keep liquids away from the computer and keyboard.
- Never cover the ventilation slots on the monitor with any type of material.
- Install or enable power management functions of the operating system or other software, including Sleep states.

Routine care

Use this information to properly care for your computer.

General cleaning safety precautions

Use this information to safely clean your computer.

⚠ CAUTION: To prevent electric shock or damage to components, never clean a product while it is turned on or plugged in.

- Never use solvents or flammable solutions to clean the computer.
- Never immerse any parts in water or cleaning solutions; apply any liquids to a clean cloth and then use the cloth on the component.
- Always unplug the computer when cleaning with liquids or damp cloths.
- Always unplug the computer before cleaning the keyboard, mouse, or air vents.

- Disconnect the keyboard before cleaning it.
- Wear safety glasses equipped with side shields when cleaning the keyboard.

Removing dirt and debris from your computer

Follow all safety precautions before cleaning dirt and debris from your computer. Here are the recommended steps to clean dirt and debris from your computer.

1. Wear disposable gloves made of latex (or nitrile gloves, if you are latex-sensitive) when cleaning the surfaces.
2. Turn off your device and unplug the power cord and other connected external devices. Remove any installed batteries from items such as wireless keyboards.

⚠ **CAUTION:** To prevent electric shock or damage to components, never clean a product while it is turned on or plugged in.

3. Moisten a microfiber cloth with water. The cloth should be moist, but not dripping wet.

IMPORTANT: To avoid damaging the surface, avoid abrasive cloths, towels, and paper towels.

4. Wipe the exterior of the product gently with the moistened cloth.

IMPORTANT: Keep liquids away from the product. Avoid getting moisture in any openings. If liquid makes its way inside your HP product, it can cause damage to the product. Do not spray liquids directly on the product. Do not use aerosol sprays, solvents, abrasives, or cleaners containing hydrogen peroxide or bleach that might damage the finish.

5. Start with the display (if applicable). Wipe carefully in one direction, and move from the top of the display to the bottom. Finish with any flexible cables, like power cord, keyboard cable, and USB cables.
6. Be sure that surfaces have completely air-dried before turning the device on after cleaning.
7. Discard the gloves after each cleaning. Clean your hands immediately after you remove the gloves.

See Cleaning your computer with a disinfectant on page 15 for recommended steps to clean the high-touch, external surfaces on your computer to help prevent the spread of harmful bacteria and viruses.

Cleaning your computer with a disinfectant

The World Health Organization (WHO) recommends cleaning surfaces, followed by disinfection, as a best practice for preventing the spread of viral respiratory illnesses and harmful bacteria.

After cleaning the external surfaces of your computer using the steps in Removing dirt and debris from your computer on page 15, you might also choose to clean the surfaces with a disinfectant. A disinfectant that is within HP's cleaning guidelines is an alcohol solution consisting of 70% isopropyl alcohol and 30% water. This solution is also known as rubbing alcohol and is sold in most stores.

Follow these steps when disinfecting high-touch, external surfaces on your computer:

1. Wear disposable gloves made of latex (or nitrile gloves, if you are latex-sensitive) when cleaning the surfaces.

2. Turn off your device and unplug the power cord and other connected external devices. Remove any installed batteries from items such as wireless keyboards.

⚠ **CAUTION:** To prevent electric shock or damage to components, never clean a product while it is turned on or plugged in.

3. Moisten a microfiber cloth with a mixture of 70% isopropyl alcohol and 30% water. The cloth should be moist, but not dripping wet.

⚠ **CAUTION:** Do not use any of the following chemicals or any solutions that contain them, including spray-based surface cleaners: bleach, peroxides (including hydrogen peroxide), acetone, ammonia, ethyl alcohol, methylene chloride, or any petroleum-based materials, such as gasoline, paint thinner, benzene, or toluene.

IMPORTANT: To avoid damaging the surface, avoid abrasive cloths, towels, and paper towels.

4. Wipe the exterior of the product gently with the moistened cloth.

IMPORTANT: Keep liquids away from the product. Avoid getting moisture in any openings. If liquid makes its way inside your HP product, it can cause damage to the product. Do not spray liquids directly on the product. Do not use aerosol sprays, solvents, abrasives, or cleaners containing hydrogen peroxide or bleach that might damage the finish.

5. Start with the display (if applicable). Wipe carefully in one direction, and move from the top of the display to the bottom. Finish with any flexible cables, like power cord, keyboard cable, and USB cables.

6. Be sure that surfaces have completely air-dried before turning the device on after cleaning.

7. Discard the gloves after each cleaning. Clean your hands immediately after you remove the gloves.

Cleaning the computer case

Follow all safety precautions before cleaning the computer case.

To clean the computer case, follow these procedures:

NOTE: You can also use these procedures to clean the tops of the keys, keyboard body, monitor body, or mouse body.

- To remove light stains or dirt, use plain water with a clean, lint-free cloth or swab.
- For stronger stains, use a mild dishwashing liquid diluted with water. Rinse well by wiping it with a cloth or swab dampened with clear water.
- For stubborn stains, use isopropyl (rubbing) alcohol. No rinsing is needed because the alcohol evaporates quickly and does not leave a residue.
- After cleaning, always wipe the unit with a clean, lint-free cloth.
- Occasionally clean the air vents on the computer. Lint and other foreign matter can block the vents and limit the airflow.

Cleaning the keyboard

Use this information to properly clean the keyboard. Follow all safety precautions before cleaning the keyboard.

To clean the tops of the keys or the keyboard body, follow the procedures described in Cleaning the computer case on page 16.

When cleaning debris from under the keys, review all rules in General cleaning safety precautions on page 14 before following these procedures.

⚠ **CAUTION:** Use safety glasses equipped with side shields before attempting to clean debris from under the keys.

- You can remove visible debris underneath or between the keys by vacuuming or shaking.
- You can use canned, pressurized air to clean debris from under the keys. Use caution because too much air pressure can dislodge lubricants applied under the wide keys.
- If you remove a key, use a specially designed key puller to prevent damage to the keys. This tool is available through many electronic supply outlets.

IMPORTANT: Never remove a wide leveled key (like the space bar) from the keyboard. If these keys are improperly removed or installed, the keyboard might not function properly.

- You can clean under a key with a swab moistened with isopropyl alcohol and squeezed out. Be careful not to wipe away lubricants necessary for proper key functions. Use tweezers to remove any fibers or dirt in confined areas. Allow the parts to air dry before reassembly.

Cleaning the monitor

Follow all safety precautions before cleaning dirt and debris from your computer. Use this information to properly clean the monitor.

- Wipe the monitor screen with a clean cloth moistened with water or with a towelette designed for cleaning monitors. Do not use sprays or aerosols directly on the screen; the liquid can seep into the housing and damage a component. Never use solvents or flammable liquids on the monitor.
- To clean the monitor body, follow the procedures in Cleaning the computer case on page 16.

Cleaning the mouse

Follow all safety precautions before cleaning your mouse. Use this information to properly clean the mouse.

To clean the mouse body, follow the procedures in Cleaning the computer case on page 16.

Service considerations

Keep these considerations in mind during the disassembly and assembly of the computer.

Tools and software requirements

Servicing the computer requires these tools.

- Torx T15 screwdriver
- Torx T30 screwdriver
- Flat-bladed screwdriver (can sometimes be used in place of the Torx screwdriver)
- Phillips P1 screwdriver

- Nonconductive, nonmarking pry tool
- Diagnostics software

Screws

The screws used in the computer are not interchangeable. They could have standard or metric threads and might be of different lengths.

If you use an incorrect screw during the reassembly process, it can damage the unit. HP strongly recommends that you keep all screws that you remove during disassembly with the removed part and then return them to their proper locations.

IMPORTANT: As you remove each subassembly from the computer, place it away from the work area to prevent damage.

Cables and connectors

Use this information to properly handle cables.

Apply only the tension required to seat or unseat the cables during insertion or removal from the connector. Handle cables by the connector whenever possible. In all cases, avoid bending or twisting the cables, and route the cables so that they cannot be caught or snagged by parts being removed or replaced.

IMPORTANT: When servicing this computer, be sure to place cables in their proper location during the reassembly process. Improper cable placement can damage the computer.

Hard drives

Handle hard drives as delicate, precision components, and avoid all physical shock and vibration. This advice applies to failed drives as well as replacement spares.

- If a drive must be mailed, place the drive in a bubble-pack mailer or other suitable protective packaging and label the package “Fragile: Handle With Care.”
- Do not remove hard drives from the shipping package for storage. Keep hard drives in their protective packaging until they are actually mounted in the computer.
- Avoid dropping drives from any height onto any surface.
- If you are inserting or removing a hard drive, turn off the computer. Do not remove a hard drive while the computer is on or in standby mode.
- Before handling a drive, ensure that you are discharged of static electricity. While handling a drive, avoid touching the connector.
- Do not use excessive force when inserting a drive.
- Avoid exposing a hard drive to liquids, temperature extremes, or products that have magnetic fields such as monitors or speakers.

Lithium coin cell battery

The battery that comes with the computer provides power to the real-time clock and has a minimum lifetime of approximately three years.

See the removal and replacement chapter for replacement instructions.

⚠ **WARNING!** This computer contains a lithium battery. There is a risk of fire and chemical burn if the battery is handled improperly. Do not disassemble, crush, puncture, short external contacts, dispose of in water or fire, or expose it to temperatures higher than 140°F (60°C). Do not attempt to recharge the battery.

NOTE: Do not dispose of batteries, battery packs, and accumulators with general household waste. To forward them to recycling centers or proper disposal, use the public collection system or return them to HP, their authorized partners, or their agents.

SATA hard drives

The Self Monitoring Analysis and Recording Technology (SMART) ATA drives for the HP Personal Computers have built-in drive failure prediction that warns the user or network administrator of an impending failure or crash of the hard drive.

The SMART drive tracks fault prediction and failure indication parameters such as reallocated sector count, spin retry count, and calibration retry count. If the drive determines that a failure is imminent, it generates a fault alert.

Table 4-3 SATA hard drive characteristics

Serial ATA hard drive characteristics	
Number of pins/conductors in data cable	7/7
Number of pins in power cable	15
Maximum data cable length	100 cm (39.37 in)
Data interface voltage differential	400 mV–700 mV
Drive voltages	3.3 V, 5 V, 12 V
Jumpers for configuring drive	N/A
Data transfer rate	6.0 Gbps

Always use an HP-approved SATA 6.0 Gbps cable because it is fully backwards compatible with the SATA 1.5 Gbps drives. Current HP desktop products ship with SATA 6.0 Gbps hard drives.

SATA data cables are susceptible to damage if overflexed. Never crease a SATA data cable and never bend it tighter than a 30 mm (1.18 in) radius.

The SATA data cable is a thin, seven-pin cable designed to transmit data for only a single drive.

Cable management

Always follow good cable management practices when working inside the computer.

- Keep cables away from major heat sources like the heat sink.
- Keep cables clear of sliding or moveable parts to prevent them from being cut or crimped when the parts are moved.
- When folding a flat ribbon cable, never fold to a sharp crease. Sharp creases can damage the wires.

- Do not bend any cable sharply. A sharp bend can break the internal wires.
- Never bend a SATA data cable tighter than a 30 mm (1.18 in) radius.
- Never crease a SATA data cable.

5 Removal and replacement procedures

Adherence to these procedures and precautions is essential for proper service. After completing all necessary removal and replacement procedures, run the Diagnostics utility to verify that all components operate properly.

NOTE: Not all features listed in this guide are available on all computers.

NOTE: HP continually improves and changes product parts. For complete and current information about supported parts for your computer, go to https://partsurfer.hp.com/partsurfer/, select your country or region, and then follow the on-screen instructions.

Preparation for disassembly

Use this information to properly prepare to disassemble and reassemble the computer.

See Routine care, drive guidelines, and disassembly preparation on page 11 for initial safety procedures.

1. Turn off the computer. If you are unsure whether the computer is off or in Hibernation, turn the computer on, and then shut it down through the operating system.

   WARNING! Turn off the computer before disconnecting any cables.

   Regardless of the power state, voltage is always present on the system board as long as the system is plugged into an active AC outlet. In some systems, the cooling fan is on even when the computer is in the Standby or Suspend modes. Always disconnect the power cord before servicing a unit.

2. Disconnect all power sources.

   WARNING! More than one power supply cable might be connected to the computer. To reduce the risk of electrical shock, disconnect all power supply cables before servicing the system.

3. Disconnect all external devices from the computer

CAUTION: Beware of sharp edges inside the chassis.

NOTE: During disassembly, label each cable as you remove it, and note its position and routing. Keep all screws with the removed components.

Removing the computer from the rack

You must remove the computer from the rack to service it. To remove the computer from the rack, use these procedures and illustration.

WARNING! Disconnect all power sources. More than one power supply cable might be connected to the computer. To reduce the risk of electrical shock, disconnect all power supply cables before servicing the system.

Before removing the computer from the rack, follow this step:

- Prepare the computer for disassembly (Preparation for disassembly on page 21).

Remove the computer:

1. Loosen the left and right thumbscrews **(1)**, and then pull the computer out until the rails latch **(2)**.

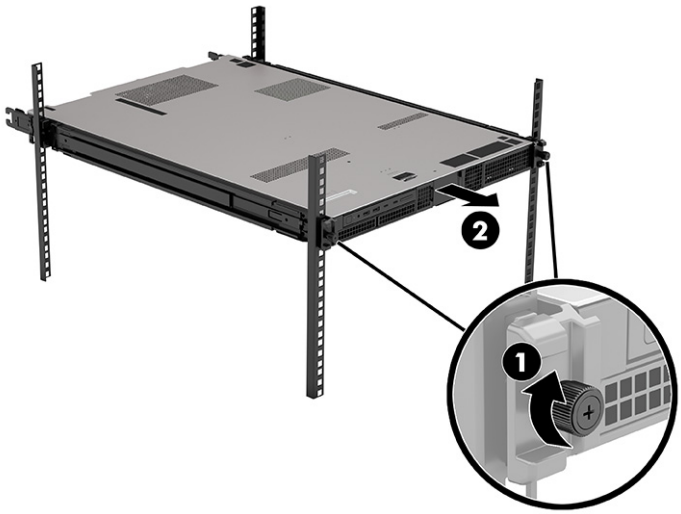

2. Pull the white tabs on both sides of the computer to unlatch the inner rails from the rack **(1)**, and then pull the computer away from the rack to remove it **(2)**.

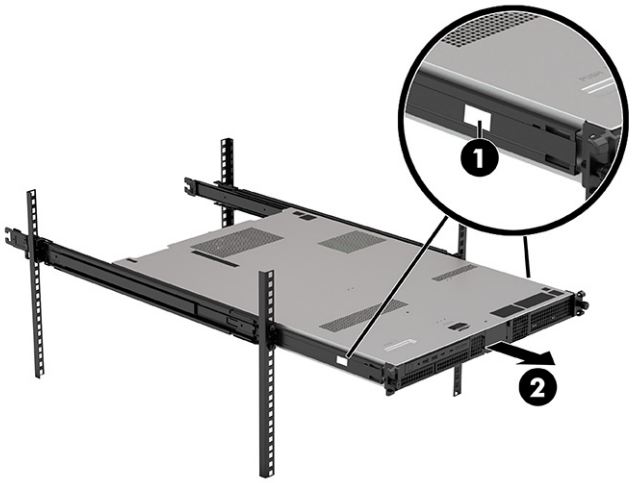

⚠ **WARNING!** Improperly removing or extending the computer from the rack poses a stability hazard. The rack may tip over causing serious personal injury. Do not put any load on the rack rail-mounted computer in the extended position. Do not leave the rack rail-mounted computer in the extended position.

NOTE: Do not use your computer as a desktop model. Instead, install it in a rack where its operational sounds do not disturb a quiet environment.

Rails

To remove the rails from the sides of the computer, use these procedures.

Before removing the rails, follow these steps:

1. Prepare the computer for disassembly (Preparation for disassembly on page 21).
2. Remove the computer from the rack (Removing the computer from the rack on page 21).

Remove the rails:

1. Remove the two Phillips screws that secure each rail to the computer **(1)**.
2. Remove the rails **(2)**.

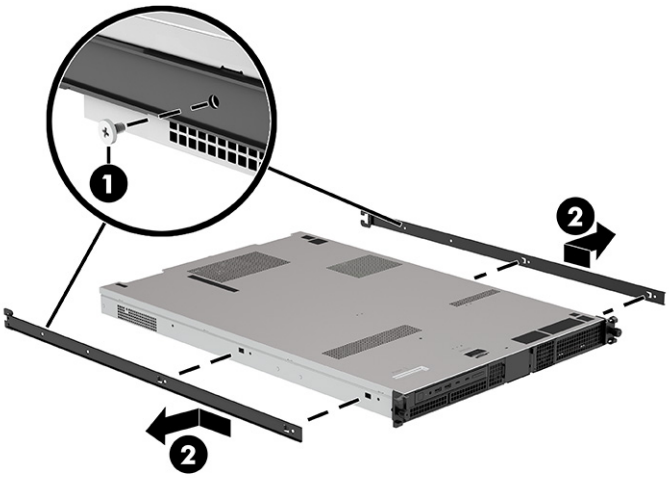

To install the rails, reverse the removal procedure.

Handle with thumbscrew

To remove the handles from the outside-front of the computer, use these procedures.

Before removing the handles, follow this step:

- Prepare the computer for disassembly (Preparation for disassembly on page 21).

Remove the handles:

1. Loosen the thumbscrew that secures each handle to the computer **(1)**.

2. Remove the handles **(2)**.

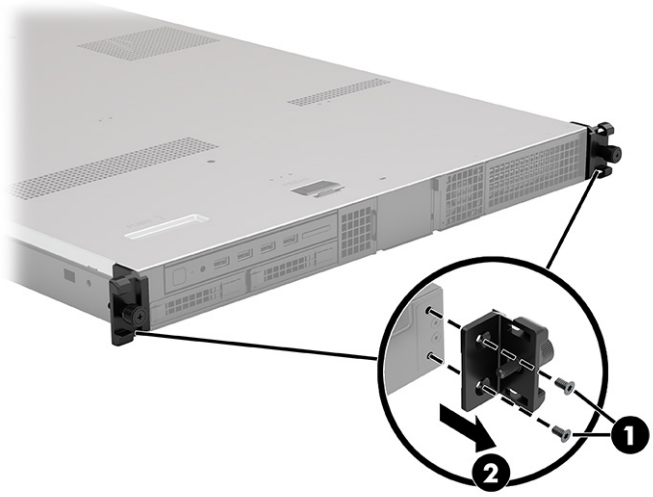

To install the handles, reverse the removal procedure.

Front bezel

To remove the front bezel, use these procedures.

Before removing the front bezel, follow this step:

- Prepare the computer for disassembly (Preparation for disassembly on page 21).

Remove the front bezel:

1. Insert the key into the lock **(1)**, rotate it 90° counterclockwise **(2)**, and then remove the key **(3)**.

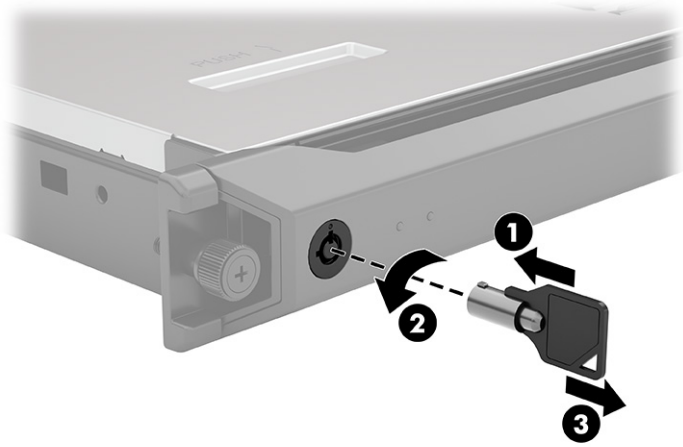

2. Rotate the left side of the bezel off the front of the computer, and then remove the bezel from the computer.

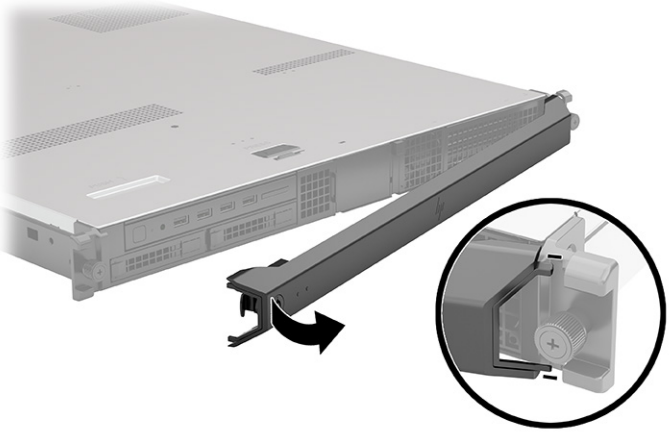

To install the front bezel, reverse the removal procedure.

Power supply

To remove the power supply, use these procedures.

Before removing the power supply, follow this step:

- Prepare the computer for disassembly (Preparation for disassembly on page 21).

Remove the power supply:

1. Push the power supply handle release button **(1)**, and then pull the handle to extend it **(2)**.
2. Use the handle to pull the power supply out of the computer **(3)**.

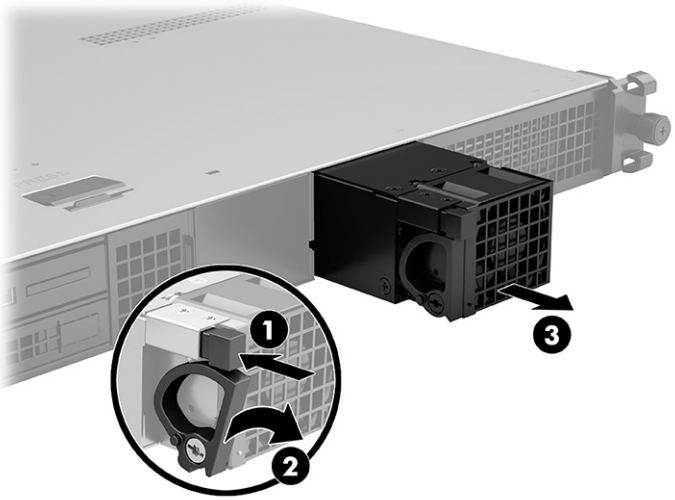

To install the power supply, reverse the removal procedure.

NOTE: Be sure that the latch is open when inserting the power supply into the computer. Then close the latch.

Drive filler panel

Use the drive filler panel to cover an empty drive bay. To remove a drive filler panel, use these procedures.

Before removing the drive filler panel, follow these steps:

1. Prepare the computer for disassembly (Preparation for disassembly on page 21).
2. Remove the computer from the rack (Removing the computer from the rack on page 21).
3. Remove the access panel (Access panel on page 26).

Remove the hard drive filler panel:

- Use a screwdriver **(1)** to press the tabs that secure the panel to the front of the computer, and then pull the panel off the front of the computer **(2)**.

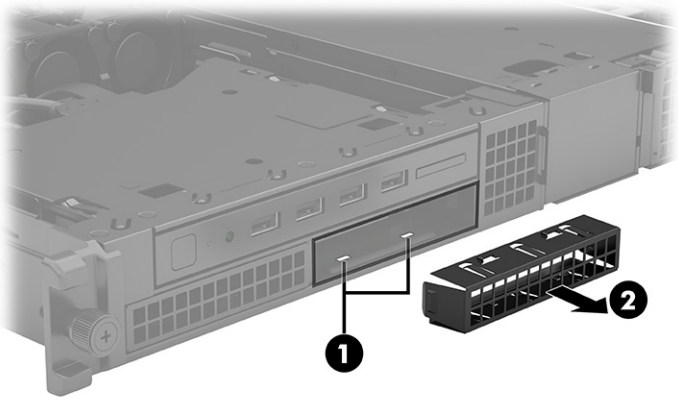

To install the drive filler panel, reverse the removal procedure.

Access panel

To remove the access panel, use these procedures.

NOTE: You will not be able to turn on the system if the access panel is loose or if it has been removed.

Before removing the access panel, follow these steps:

1. Prepare the computer for disassembly (Preparation for disassembly on page 21).
2. Remove the computer from the rack (Removing the computer from the rack on page 21).

Remove the access panel:

- Press the release button **(1)**, slide the panel toward the back of the computer, and then lift it off the computer **(2)**.

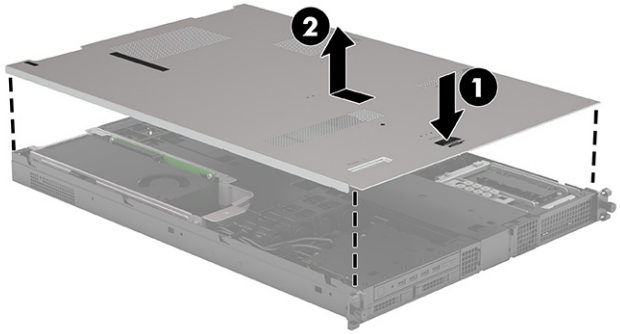

To install the access panel, reverse the removal procedure.

3.5 inch hard drive

To remove the 3.5 inch hard drive, use these procedures.

NOTE: Before you remove the old hard drive, be sure to back up the data from the old hard drive so that you can transfer the data to the new hard drive.

Before removing the hard drive, follow this step:

1. Prepare the computer for disassembly (Preparation for disassembly on page 21).
2. Remove the access panel (Access panel on page 26).

Remove the hard drive:

1. Remove the Torx T15 screw **(1)** from the drive cage.

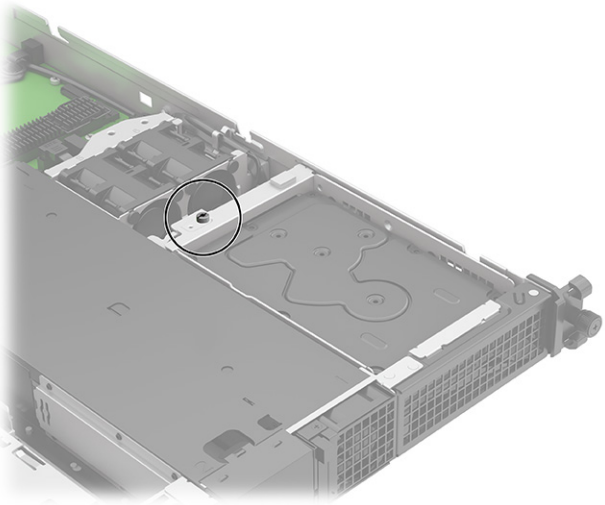

2. Lift the drive cage, and then unplug cables **(1)** and **(2)** from the rear of the drive.

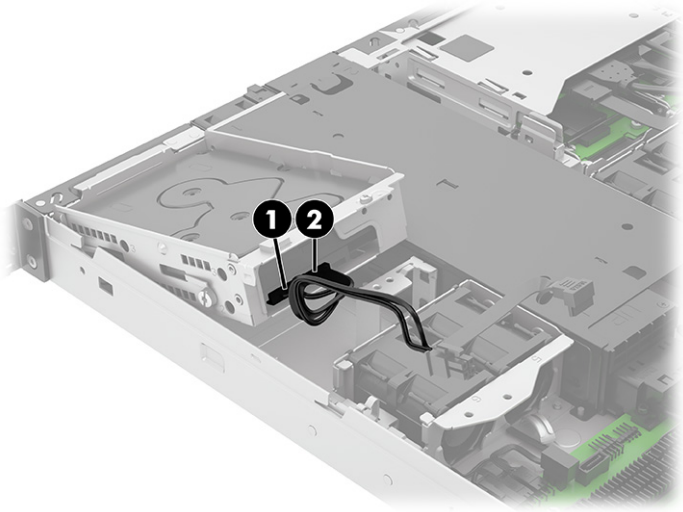

3. Remove the hard drive carrier from the chassis.

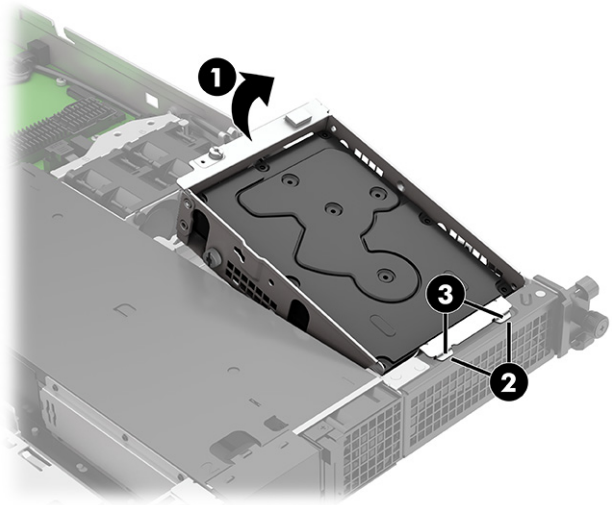

4. Remove the four Torx T15 screws **(1)** that secure the hard drive to the hard drive carrier, and then remove the drive from the carrier **(2)**.

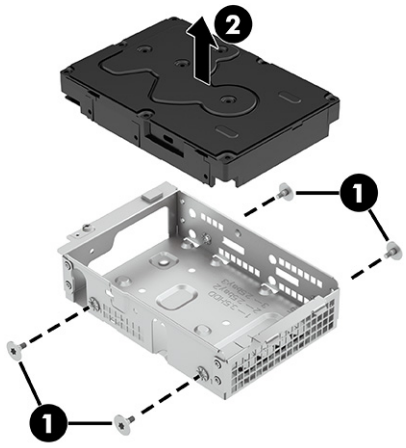

To reassemble and replace the hard drive, reverse the removal procedure.

M.2 module

To remove the M.2 module, use these procedures.

NOTE: Before you remove the old module, be sure to back up your data so that you can transfer the data to the new module.

Before removing the module, follow this step:

1. Prepare the computer for disassembly (Preparation for disassembly on page 21).
2. Remove the access panel (Access panel on page 26).

Remove the hard drive:

1. Push the drive carrier assembly handle release button **(1)** to extend the handle, and then pull the drive carrier assembly out of the front of the computer **(2)**.

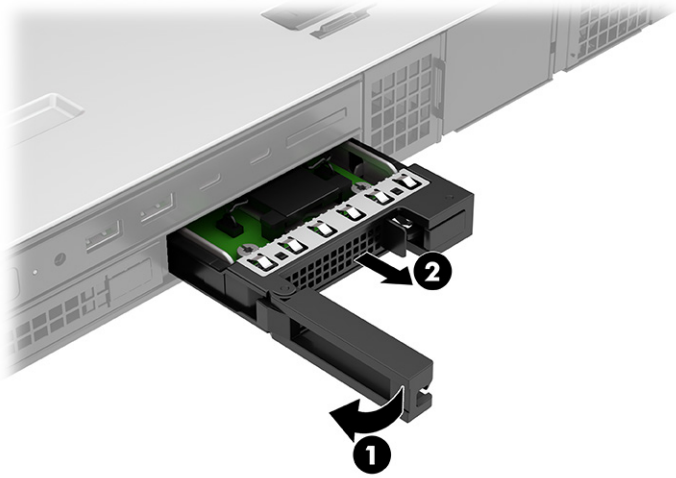

2. Squeeze the metal clips on both sides of the cover **(1)** and then lift the cover off the M.2 adapter carrier **(2)**.

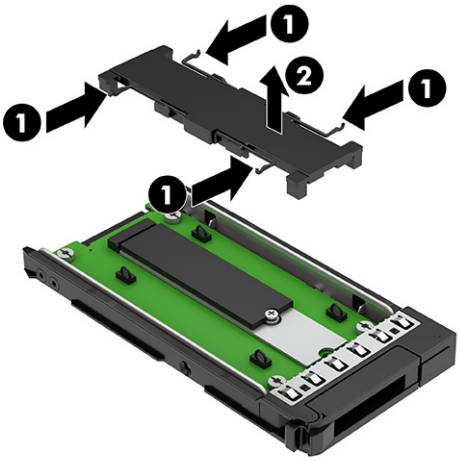

3. Remove the screw **(1)**, lift the end of the M.2 module from the M.2 adapter carrier assembly **(2)** and rotate it up and out of the assembly **(3)**.

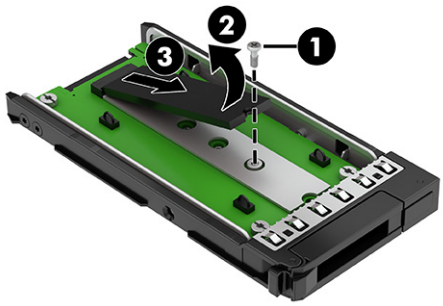

To reassemble and replace the hard drive, reverse the removal procedure.



IMPORTANT: Bays 2 and 3 shown above are internal only.

- Bay 0: Position A
- Bay 1: Position A
- Bay 2: Position A (internal)
- Bay 3: Position B (internal)

Interlock switch

To remove the interlock switch, use these procedures.

Before removing the interlock switch, follow these steps:

1. Prepare the computer for disassembly (Preparation for disassembly on page 21).
2. Remove the computer from the rack (Removing the computer from the rack on page 21).
3. Remove the access panel (Access panel on page 26).

Remove the interlock switch:

1. Remove the screw **(1)**.
2. Tilt the interlock switch slightly forward **(2)**, and then remove it from the computer **(3)**.
3. Disconnect the cable from the system board **(4)**.

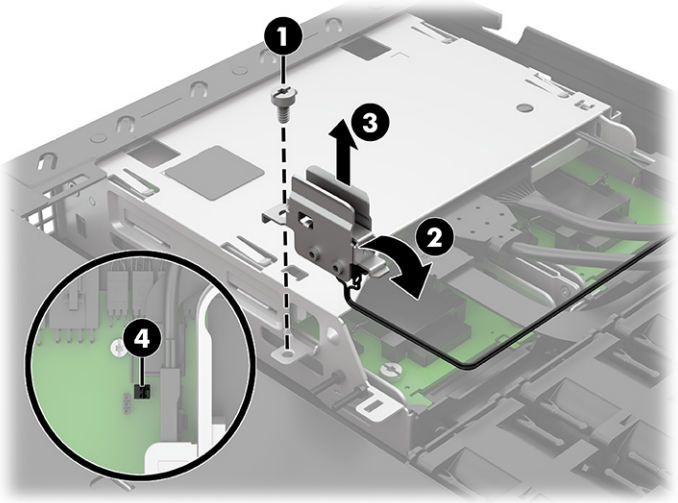

To install the interlock switch, reverse the removal procedure.

Power supply filler panel

Use the power supply filler panel to cover an empty power supply bay. To remove the power supply filler panel, use these procedures.

Before removing the power supply filler panel, follow these steps:

1. Prepare the computer for disassembly (Preparation for disassembly on page 21).
2. Remove the computer from the rack (Removing the computer from the rack on page 21).
3. Remove the access panel (Access panel on page 26).

Remove the power supply filler panel:

1. Press the panel release tab at the top-front of the computer **(1)**.

2. Pull the panel off the front of the computer **(2)**.

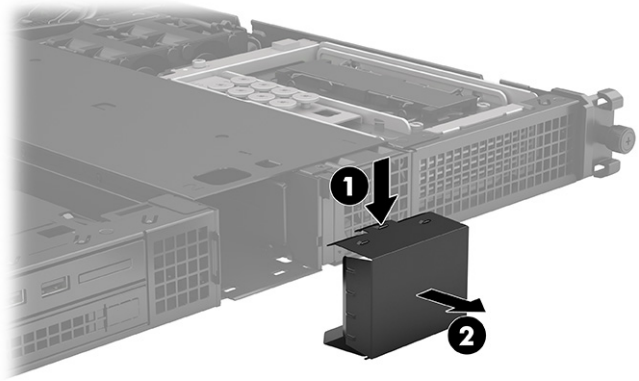

To install the power supply filler panel, reverse the removal procedure.

Front I/O assembly

To remove the front I/O assembly, use these procedures.

Before removing the front I/O assembly, follow these steps:

1. Prepare the computer for disassembly (Preparation for disassembly on page 21).
2. Remove the computer from the rack (Removing the computer from the rack on page 21).
3. Remove the access panel (Access panel on page 26).

Remove the front I/O assembly:

1. Disconnect the audio and power button cable from the connector **(1)**.
2. Disconnect the cable that routes to the front UI (FUI) connector on the system board **(2)**.
3. Disconnect the cable that routes to the front USB (FUSB) connector on the system board **(3)**.

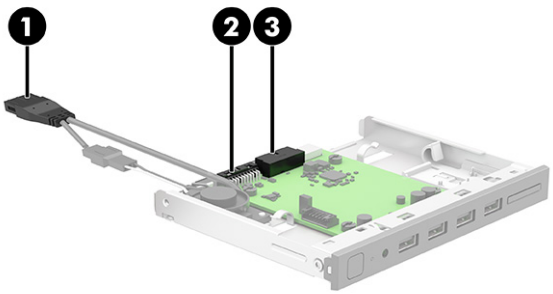

4. Pull the release tab toward the side of the computer **(1)**, and then slide the assembly out of the front of the computer **(2)**.

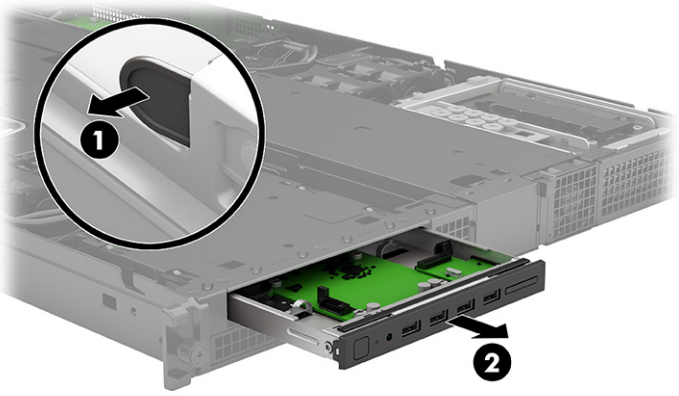

To install the front I/O assembly, reverse the removal procedure.

Plastic frame/fan duct

To remove the plastic frame, use these procedures.

Before removing the plastic frame, follow these steps:

1. Prepare the computer for disassembly (Preparation for disassembly on page 21).
2. Remove the computer from the rack (Removing the computer from the rack on page 21).
3. Remove the access panel (Access panel on page 26).

Remove the plastic frame:

- Lift the plastic frame straight up and out of the computer.

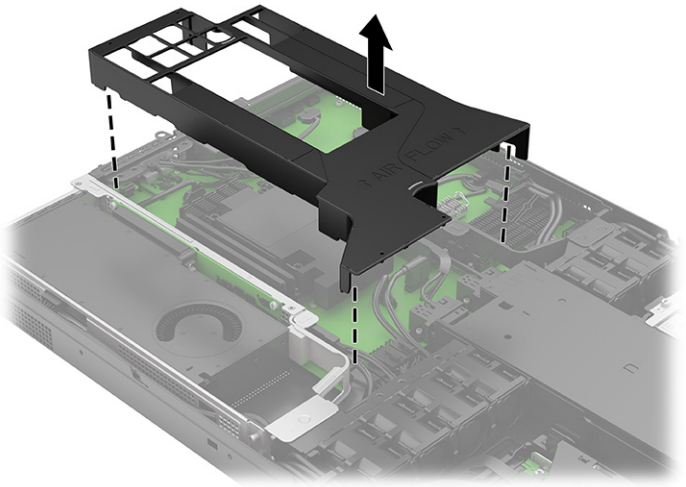

To install the plastic frame, reverse the removal procedure.

Memory modules (DIMMs)

To remove the memory modules, use this information and procedures.

The memory sockets on the system board are populated with at least one preinstalled memory module. To achieve the maximum memory support, you can populate the system board with up to 256 GB of memory configured in a high-performing four-channel mode.

For proper system operation, the DIMMs must adhere to the following specifications:

- Industry-standard 288-pin
- Registered PC5-4800 DDR5 4800 MHz compliant
- 1.1 volt DDR5 SDRAM memory modules

The computer supports the following setups:

- 16 Gb and 24 Gb ECC memory technologies
- Single-sided and double-sided memory modules
- Memory modules constructed with x4 and x8 DDR devices; memory modules constructed with x16 SDRAM are not supported

NOTE: The system does not operate properly if you install unsupported memory modules.

There are four memory sockets on the system board, with one socket per channel. The sockets are labeled DIMM1, DIMM2, DIMM3, and DIMM4.

The system automatically operates in single-channel mode, multi-channel mode, or flex mode, depending on how the DIMMs are installed.

The maximum operational speed is determined by the slowest DIMM or CPU installed in the system.

IMPORTANT: You must disconnect the power cord and wait approximately 30 seconds for the power to drain before adding or removing memory modules. Regardless of the power state, voltage is always supplied to the memory modules as long as the computer is plugged into an active AC outlet. Adding or removing memory modules while voltage is present can cause irreparable damage to the memory modules or system board.

The memory module sockets have gold-plated metal contacts. When upgrading the memory, use memory modules with gold-plated metal contacts to prevent corrosion, oxidation, or both resulting from having incompatible metals in contact with each other.

Static electricity can damage the electronic components of the computer or optional cards. Before beginning these procedures, be sure that you are discharged of static electricity by briefly touching a grounded metal object. For more information, see Electrostatic discharge information on page 11.

When handling a memory module, be careful not to touch any of the contacts. Doing so can damage the module.

Before replacing the memory modules, follow these steps:

1. Prepare the computer for disassembly (Preparation for disassembly on page 21).
2. Remove the computer from the rack (Removing the computer from the rack on page 21).

3. Remove the access panel (Access panel on page 26).
4. Remove the plastic frame/fan duct (Plastic frame/fan duct on page 33).

Replace a memory module:

1. To remove a memory module, open both latches of the memory module socket **(1)**, and then remove the memory module from the socket **(2)**.

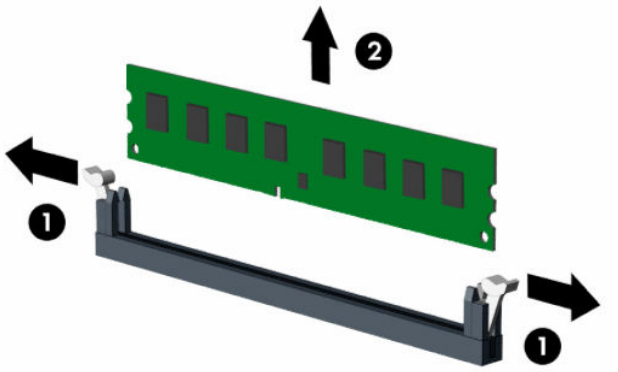

2. To install a memory module, open both latches of the memory module socket **(1)**, and insert the memory module into the socket **(2)**. Press the module down into the socket so that the module is fully inserted and properly seated. Be sure that the latches are in the closed position **(3)**.

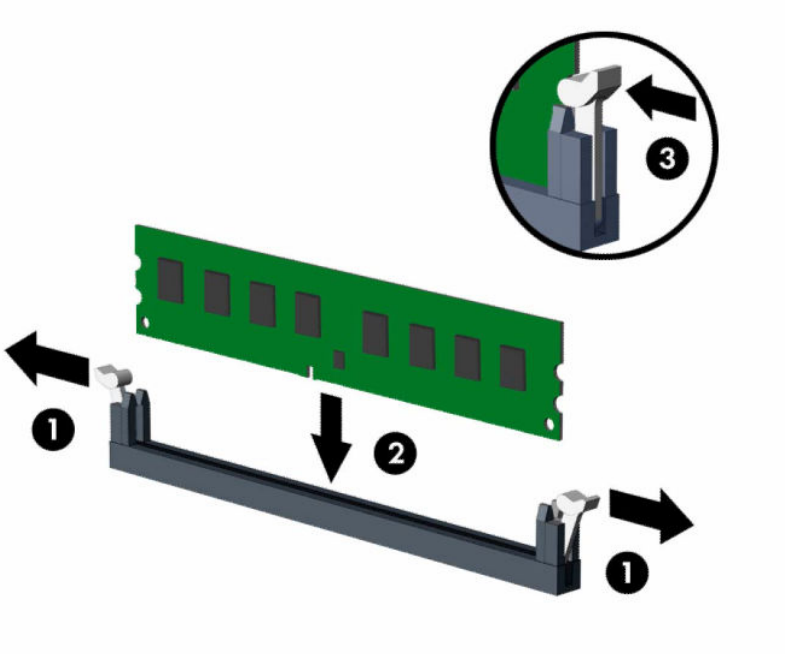

NOTE: A memory module can be installed in only one way. Match the notch on the module with the tab on the memory socket.

Populate the black DIMM sockets before the white DIMM sockets.

For maximum performance, populate the sockets so that the memory capacity is spread as equally as possible between channel A and channel B.

The computer automatically recognizes the additional memory when you turn on the computer.

Heat sink

To remove the heat sink, use these procedures.

IMPORTANT: The bond between the heat sink and the processor can be very tight.

If the computer will turn on, before removing the heat sink, turn on the computer until it warms the heat sink. Warming the heat sink loosens the bond between the heat sink and the processor, thereby making it easier to separate them.

Make sure not to pull the processor out of the socket when you lift the heat sink, especially if you cannot warm the heat sink before removal. Inadvertently removing the processor can damage the pins.

Before removing the heat sink, follow these steps:

1. Prepare the computer for disassembly (Preparation for disassembly on page 21).
2. Remove the computer from the rack (Removing the computer from the rack on page 21).
3. Remove the access panel (Access panel on page 26).
4. Remove the plastic frame/fan duct (Plastic frame/fan duct on page 33).

Remove the heat sink:

1. Loosen the four captive Torx T30 screws **(1-4)** in the numerical order indicated on the heat sink, raise the four locking levers **(5)**, and then remove the heat sink from the computer **(6)**.

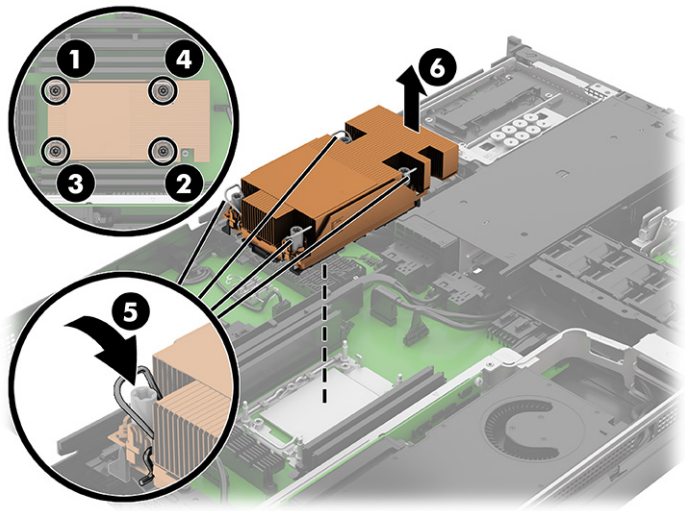

2. Thoroughly clean the thermal material from the surfaces of the heat sink and the system board components each time the heat sink is removed. Replacement thermal material is included with the heat sink and system board spare part kits. The following illustration shows the replacement thermal material locations.

   Thermal paste is used on the processor **(1)** and on the heat sink **(2)**.

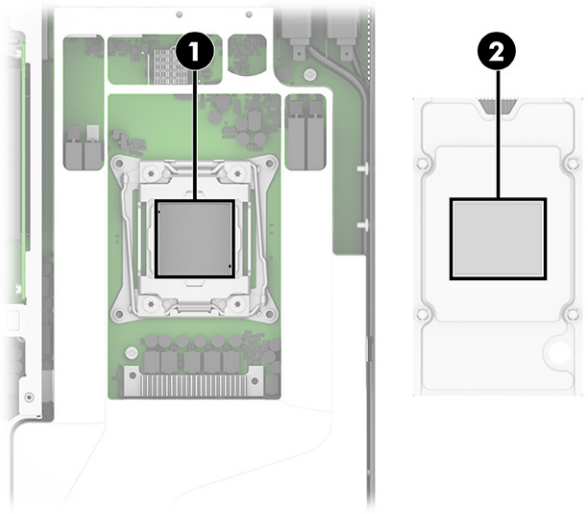

IMPORTANT: Tighten heat sink retaining screws in diagonally opposite pairs (as in an X) to evenly seat the heat sink on the processor to avoid damage that could require replacing the system board.

To replace the heat sink, reverse the removal procedures.

Processor

To remove the processor, use these procedures.

1. Prepare the computer for disassembly (Preparation for disassembly on page 21).
2. Remove the computer from the rack (Removing the computer from the rack on page 21).
3. Remove the access panel (Access panel on page 26).
4. Remove the plastic frame/fan duct (Plastic frame/fan duct on page 33).
5. Remove the heat sink (Heat sink on page 36).

Remove the processor:

1. Position the heat sink upside down.
2. Carefully release the four processor retainer clips **(1)** that secure the processor holder to the heat sink.
3. Carefully lift the processor from the socket **(2)**.

IMPORTANT: Do not handle the pins in the processor socket. These pins are fragile, and handling them could cause irreparable damage. If pins are damaged, you might have to replace the system board.

The heat sink must be installed within 24 hours of installing the processor to prevent damage to the processor's solder connections.

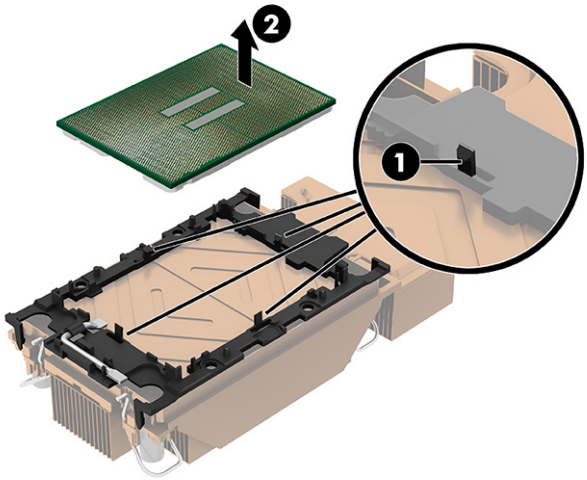

To replace the processor, reverse the removal procedures.

NOTE: After installing a new processor onto the system board, always update the system ROM to ensure that the latest version of the BIOS is being used on the computer. You can find the latest system BIOS on the web at: https://support.hp.com/us-en.

PCIe dual-slot riser assembly

To remove the PCIe dual-slot riser assembly, use these procedures.

Before removing the PCIe dual-slot riser assembly, follow these steps:

1. Prepare the computer for disassembly (Preparation for disassembly on page 21).
2. Remove the computer from the rack (Removing the computer from the rack on page 21).
3. Remove the access panel (Access panel on page 26).

Remove the PCIe dual-slot riser assembly:

1. Lift the PCIe dual-slot riser assembly straight up and out of the computer. Be sure to lift at the two blue tabs on the bracket.

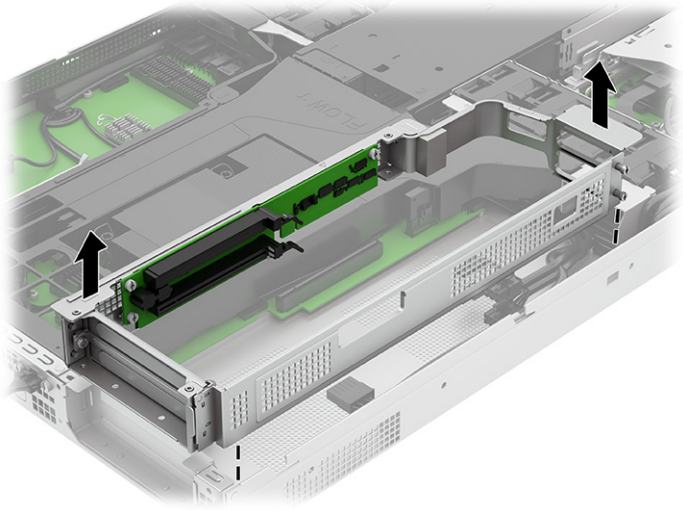

2. You must remove the top of the retainer bracket to remove an expansion card. To remove the top of the retainer bracket, loosen the two captive Torx T15 screws **(1)**, and then lift the top off the bracket **(2)**.

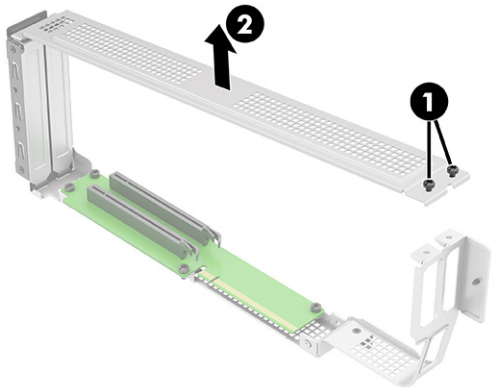

3. To remove an expansion card from the assembly, pull the release arm on the expansion socket **(1)**, and then pull the expansion board out of the socket **(2)**.

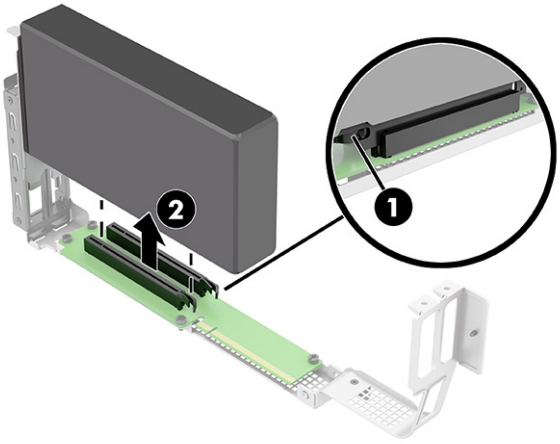

4. To remove the dual riser board from the bracket, remove the four Torx T15 screws **(1)**, and then remove the board from the bracket **(2)**.

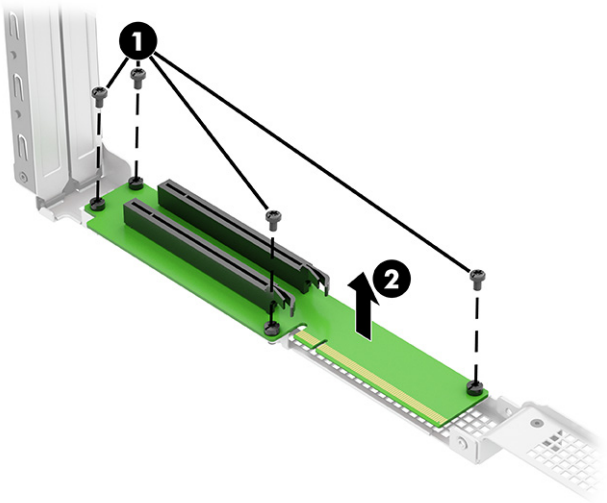

To install the PCIe dual-slot riser assembly, reverse the removal procedure.

PCIe single-slot riser assembly

To remove the PCIe single-slot riser assembly, use these procedures.

Before removing the PCIe single-slot riser assembly, follow these steps:

1. Prepare the computer for disassembly (Preparation for disassembly on page 21).
2. Remove the computer from the rack (Removing the computer from the rack on page 21).
3. Remove the access panel (Access panel on page 26).

Remove the PCIe single-slot riser assembly:

1. Lift the PCIe single-slot riser assembly straight up and out of the computer. Be sure to lift at the two blue tabs on the bracket.

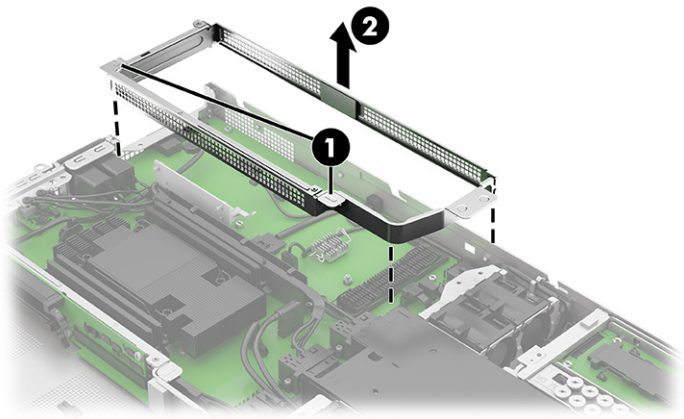

2. You must remove the top of the retainer bracket to remove an expansion card. To remove the top of the retainer bracket, loosen the captive Torx T15 screw **(1)**, and then lift the top off the bracket **(2)**.

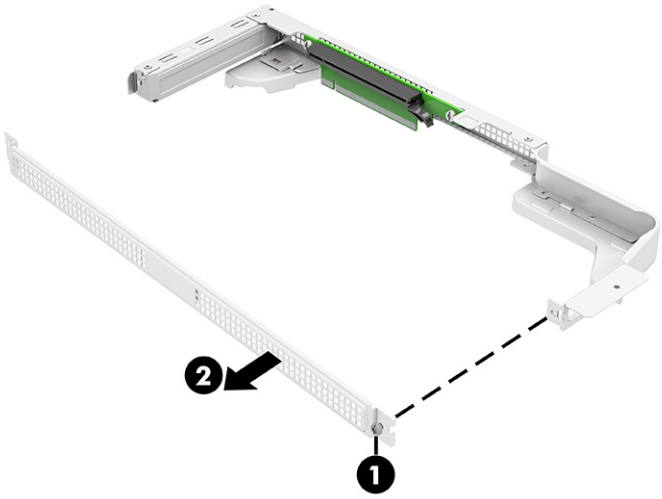

3. To remove an expansion card from the assembly, pull the release arm on the expansion socket **(1)**, pull the expansion board out of the socket **(2)**, and then remove the card from the bracket **(3)**.

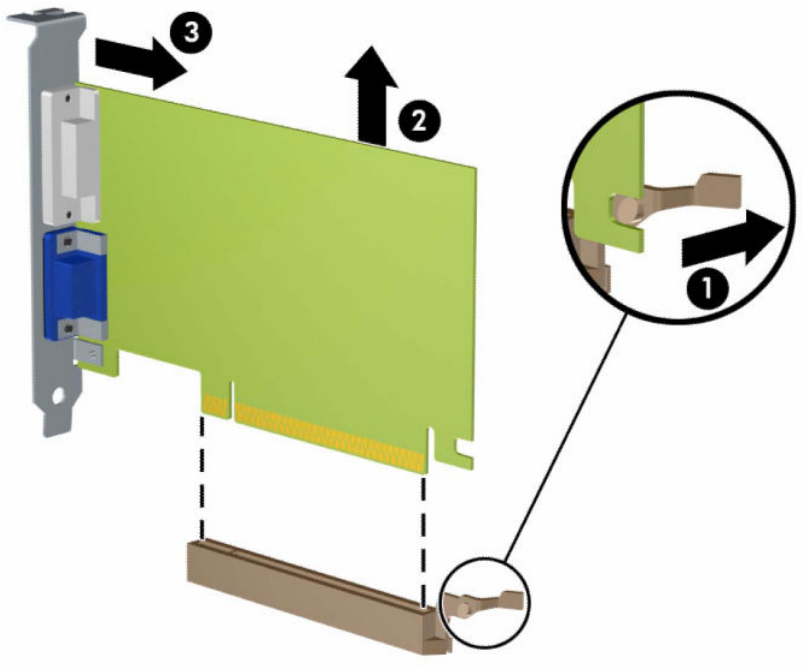

4. To remove the single riser board from the bracket, remove the two Torx T15 screws **(1)**, and then remove the board from the bracket **(2)**.

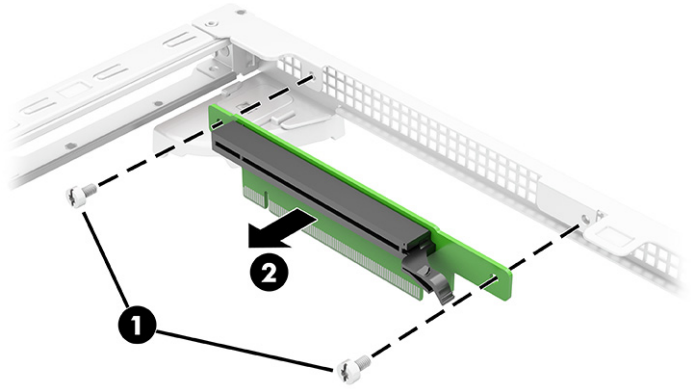

5. To install a new expansion card into the bracket with a blank installed, remove the blank by sliding it straight up and out of the rear of the frame.

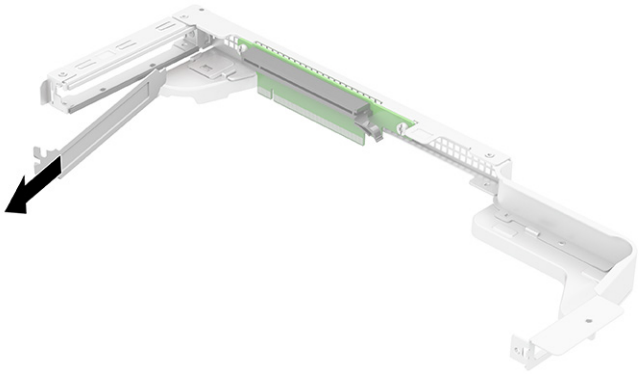

To install the PCIe single-slot riser assembly, reverse the removal procedure.

Battery

To remove the battery, use these procedures. The battery that comes with the computer provides power to the real-time clock. When replacing the battery, use a battery equivalent to the battery originally installed in the computer. The computer comes with a 3 V lithium coin cell battery.

⚠ **WARNING!** The computer contains an internal lithium manganese dioxide battery. There is a risk of fire and burns if the battery is not handled properly. To reduce the risk of personal injury:

- Do not attempt to recharge the battery.
- Do not expose to temperatures higher than 60°C (149°F).
- Do not disassemble, crush, puncture, short external contacts, or dispose of in fire or water.
- Replace the battery only with the HP spare part that is designated for this product.

IMPORTANT: Before replacing the battery, back up the computer CMOS settings. When the battery is removed or replaced, the CMOS settings are cleared.

Static electricity can damage the electronic components of the computer or optional equipment. Before beginning these procedures, be sure that you are discharged of static electricity by briefly touching a grounded metal object.

NOTE: You can extend the lifetime of the lithium battery by plugging the computer into an AC outlet. The lithium battery is used only when the computer is not connected to AC power.

HP encourages customers to recycle used electronic hardware, HP original print cartridges, and rechargeable batteries. For more information about recycling programs, go to http://www.hp.com/recycle.

Before removing the battery, follow these steps:

1. Prepare the computer for disassembly (Preparation for disassembly on page 21).
2. Remove the computer from the rack (Removing the computer from the rack on page 21).
3. Remove the access panel (Access panel on page 26).

4. Remove the plastic frame/fan duct (Plastic frame/fan duct on page 33).
5. Remove the PCIe dual-slot riser assembly (PCIe dual-slot riser assembly on page 38).

Remove the battery:

- To release the battery from its holder, squeeze the metal clamp that extends above one edge of the battery **(1)**. When the battery pops up, lift it out **(2)**.



To install a battery, reverse the removal procedures.

Solid-state drive

To remove the solid-state drive module, use these procedures.

Before removing the solid-state drive module, follow these steps:

1. Prepare the computer for disassembly (Preparation for disassembly on page 21).
2. Remove the computer from the rack (Removing the computer from the rack on page 21).
3. Remove the access panel (Access panel on page 26).
4. Remove the plastic frame/fan duct (Plastic frame/fan duct on page 33).
5. Remove the PCIe dual-slot riser assembly (PCIe dual-slot riser assembly on page 38).

Remove the solid-state drive module:

1. Remove the screw that secures the drive **(1)**.

2. Carefully lift the drive **(2)**, and then pull the drive out of the system board connector **(3)**.

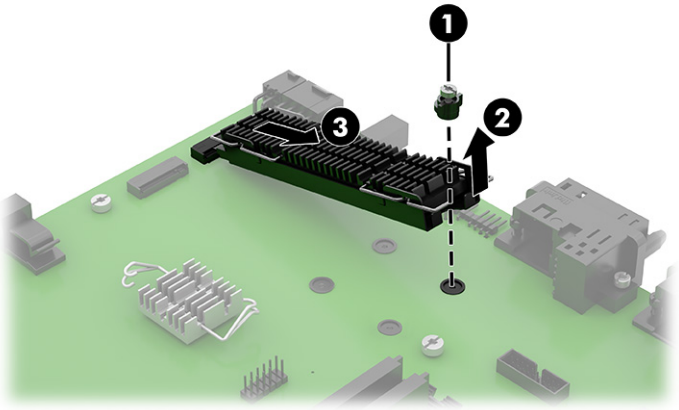

To install the solid-state drive module, reverse the removal procedure.

System board

To remove the system board, use these procedures.

Before removing the system board, follow these steps:

1. Prepare the computer for disassembly (Preparation for disassembly on page 21).
2. Remove the computer from the rack (Removing the computer from the rack on page 21).
3. Remove the access panel (Access panel on page 26).
4. Remove the plastic frame/fan duct (Plastic frame/fan duct on page 33).
5. Remove the PCIe dual-slot riser assembly (PCIe dual-slot riser assembly on page 38).
6. Remove the PCIe single-slot riser assembly (PCIe single-slot riser assembly on page 40).

When replacing the system board, be sure to remove following components from the old board and install them into the new board:

- Heat sink (Heat sink on page 36)
- Memory modules (Memory modules (DIMMs) on page 34)
- Processor (Processor on page 37)

Remove the system board:

1. Disconnect all cables from the system board, and note their location for reinstallation.

IMPORTANT: Do not remove the power cables from the computer for any reason.

For proper routing of power cables, install the power connector at the back of the computer first, and then route the remaining cables through the power cable channel that is mounted on the system board.

The power cables cannot be replaced. Take extra care while moving or working with the power cables. Damaged power cables require a complete system replacement.

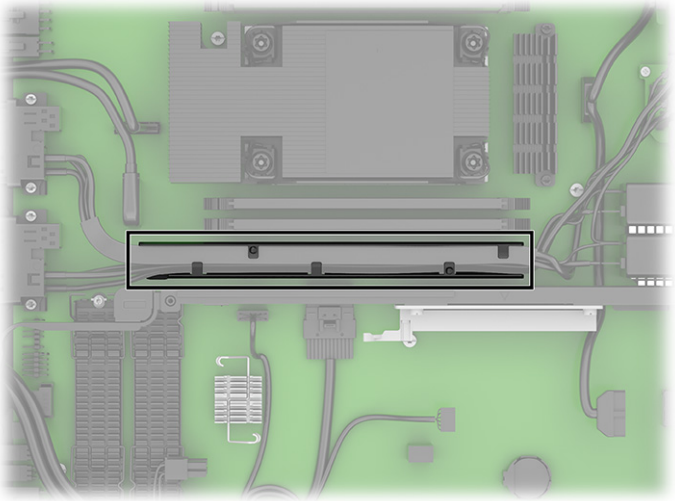

- **(1)**: MAINT LED connector
- **(2)**: FUSB connector
- **(3)**: FUI connector
- **(4)**: Power supply connectors
- **(5)**: Fan connectors
- **(6)**: Graphics and hard drive power connectors
- **(7)**: SATA connectors
- **(8)**: FIOP connector
- **(9)**: FAUDIO connector
- **(10)**: Power connectors; lift them out of their slot

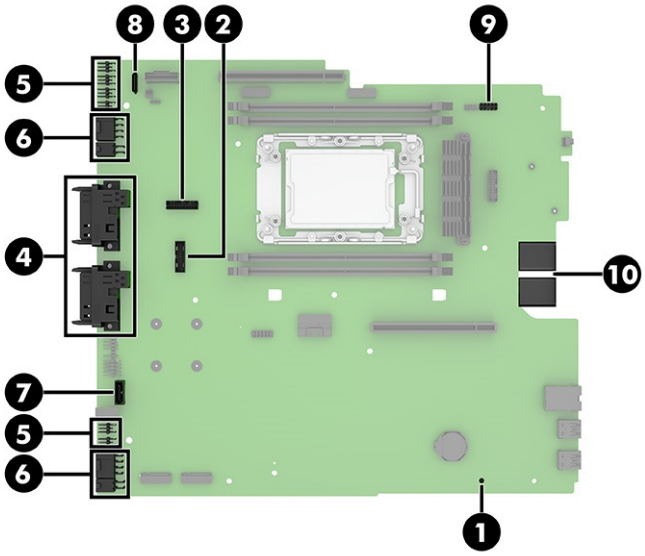

2. Remove the Torx T15 screw (1) from the right side of each power connector, and then slide the power cable (2) out of the connector.

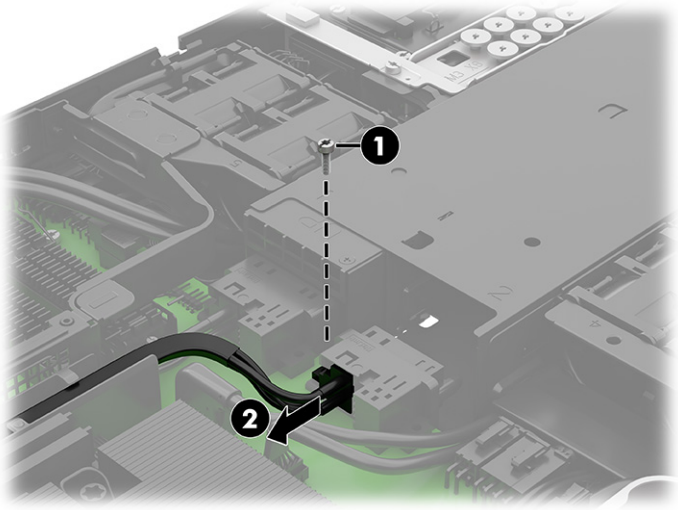

3. Remove the eleven Torx T15 screws **(1)** that secure the system board to the computer.
4. Lift the system board out of the computer **(2)**.

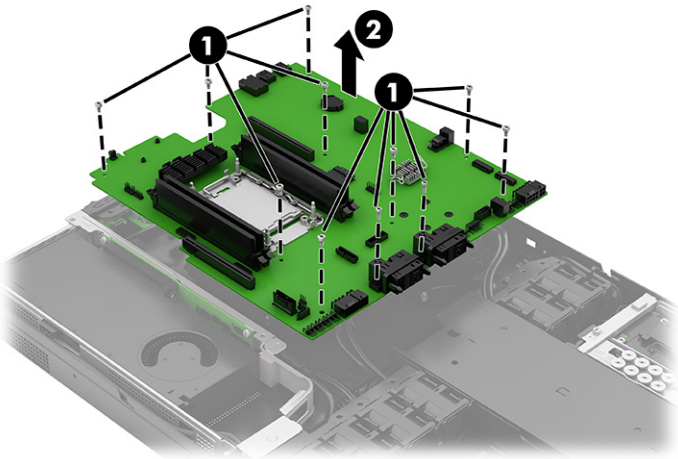

To install the system board, reverse the removal procedures.

NOTE: When replacing the system board, you must change the chassis serial number in the BIOS.

When replacing the system board, you must reprogram the SMBIOS information about the affected computer. Failure to reprogram the board will result in eventual failure, such as an activation failure (need to reactivate the system) or a system recovery failure.

Update SMBIOS information in Computer Setup.

System board components

Use this illustration and table to determine system board component locations.

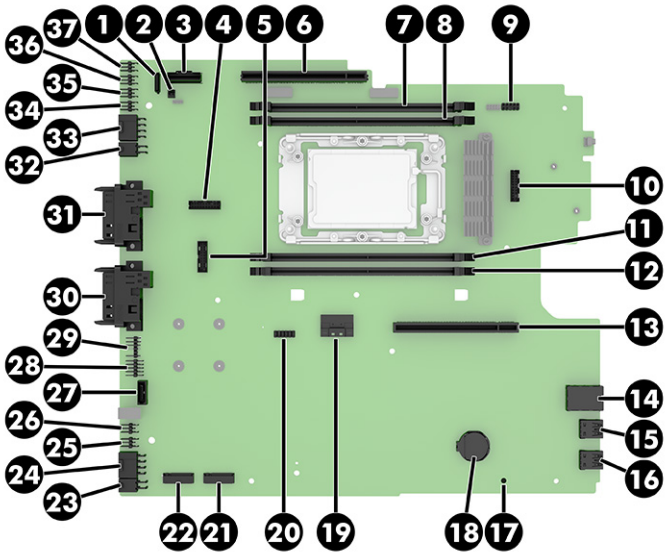

Table 5-1 System board connections

Item	Component	Item	Component
(1)	Front I/O (FIOP)	(20)	Internal USB 3.0
(2)	Interlock switch connector	(21)	M.2 SSD (0)
(3)	Bay 0/1	(22)	M.2 SSD (1)
(4)	Front I/O (FUI)	(23)	Hard drive power (HDD PWR)
(5)	Front I/O (FUSB)	(24)	Graphics card power (GFX PWR1)
(6)	Dual-slot riser connector	(25)	System fan 6 (SYS FAN6)
(7)	Memory module (channel A) (DIMM2)	(26)	System fan 5 (SYS FAN5)
(8)	Memory module (channel A) (DIMM1)	(27)	SATA (6 Gb/s)
(9)	Front audio (FAUDIO)	(28)	Internal USB 2.0
(10)	Serial/PS2	(29)	Internal USB 2.0
(11)	Memory module (channel B) (DIMM3)	(30)	Power connector (PSU PWR1)
(12)	Memory module (channel B) (DIMM4)	(31)	Power connector (PSU PWR2)
(13)	Single-slot riser connector	(32)	Hard drive power (HDD PWR)
(14)	RJ-45 network connector	(33)	Graphics card power (GFX PWR1)
(15)	USB 5 Gbps port	(34)	System fan 4 (SYS FAN4)
(16)	USB 5 Gbps port	(35)	System fan 3 (SYS FAN3)
(17)	Hard drive LED	(36)	System fan 2 (SYS FAN2)
(18)	Battery	(37)	System fan 1 (SYS FAN1)
(19)	Bay 2/3		

Cable support brackets

To remove the cable support brackets, use these procedures.

Before removing the cable support brackets, follow these steps:

1. Prepare the computer for disassembly (Preparation for disassembly on page 21).
2. Remove the computer from the rack (Removing the computer from the rack on page 21).
3. Remove the access panel (Access panel on page 26).
4. Remove the plastic frame/fan duct (Plastic frame/fan duct on page 33).
5. Remove the PCIe dual-slot riser assembly (PCIe dual-slot riser assembly on page 38).

There is one cable support brackets near the fans. To remove the cable support bracket:

- Remove the Torx T15 screw **(1)** that secures the bracket to the computer, and then remove the bracket **(2)**.

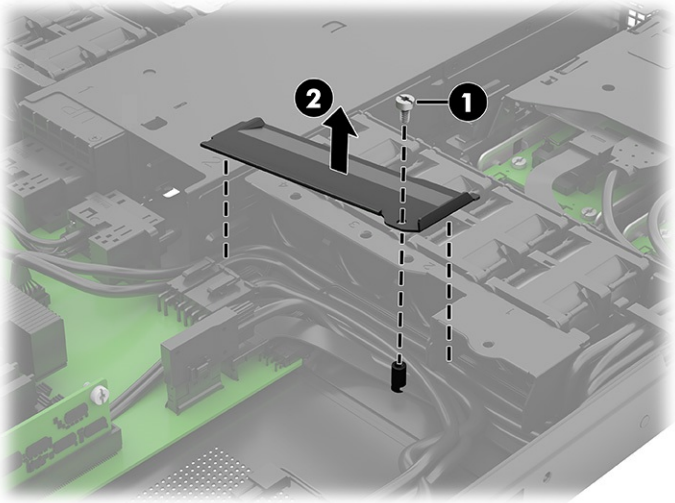

To install the cable support bracket, reverse the removal procedure.

IMPORTANT: When installing the cable support bracket, ensure that the cables are flattened to the chassis base before installing the cable support bracket, or it could damage the cables.

Fans

The computer uses six fan assemblies. You can use the same steps to remove all assemblies. To remove the fans, use these procedures.

The top four fan assembly cables route under the metal bracket near the four fans. The bottom two fan assembly cables route under a different bracket near the two fans.

Before removing the fans, follow these steps:

1. Prepare the computer for disassembly (Preparation for disassembly on page 21).
2. Remove the computer from the rack (Removing the computer from the rack on page 21).

3. Remove the access panel (Access panel on page 26).
4. Remove the plastic frame/fan duct (Plastic frame/fan duct on page 33).
5. Remove the cable support brackets (Cable support brackets on page 49).

Remove the fans:

1. Disconnect the fan cable from the appropriate system board connector **(1)**.
2. Lift the fan assembly out of the computer **(2)**.

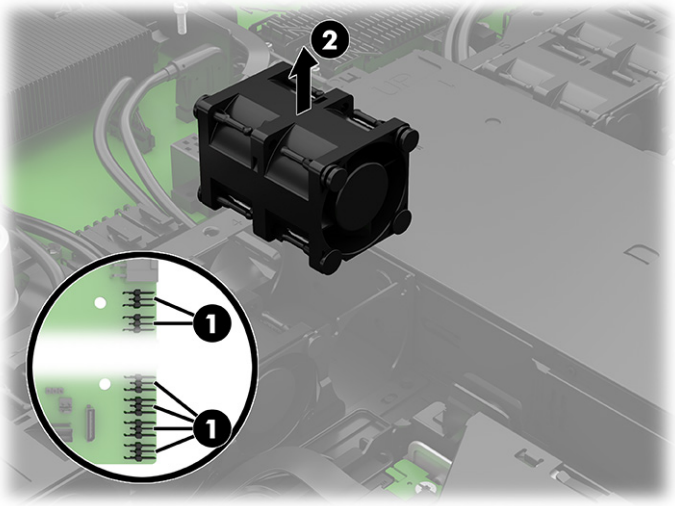

3. Each fan assembly uses a specific system board connector. Use the following illustration to determine which fan uses which connector. For proper fan function, be sure to use the correct connector when installing fans.

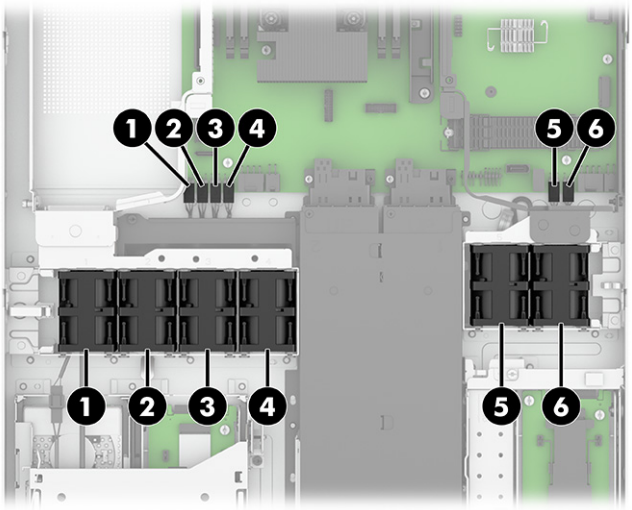

To install the fans, reverse the removal procedure.

Hard drive connectors

To remove the hard drive connectors, use these procedures.

1. Prepare the computer for disassembly (Preparation for disassembly on page 21).
2. Remove the computer from the rack (Removing the computer from the rack on page 21).
3. Remove the access panel (Access panel on page 26).

Remove the hard drive connectors:

1. The computer offers hard drive connectors as shown in the following illustration. The stacked connectors are for hard drives 0 and 1.

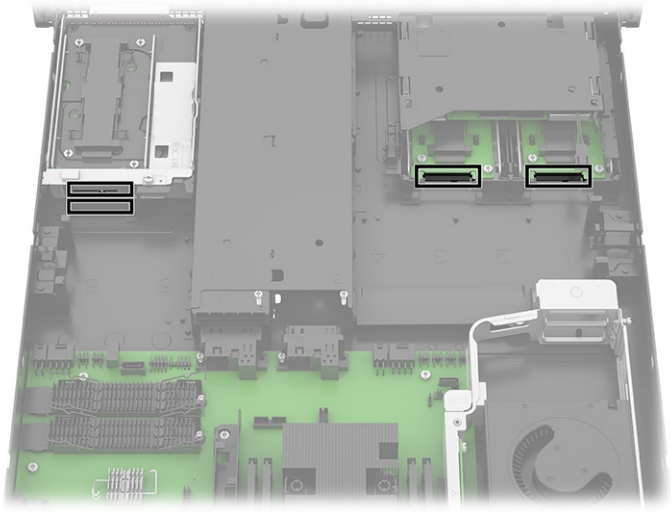

2. Use the following illustration to determine the locations on the system board for the hard drive data and power connectors.

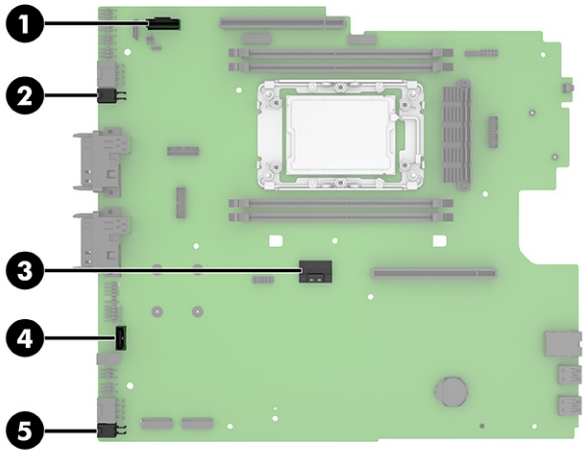

Table 5-2 System board connections

Item	Component
(1)	Bay 0/1
(2)	Drive power 1
(3)	Bay 2/3

Table 5-2 System board connections (continued)

Item	Component
(4)	SATA 6 Gb/s
(5)	Drive power 2

Hard drives 2 and 3 use a separate cable that splices into part of the hard drive power cable and then routes to hard drives 2 and 3. The power cable also connects hard drives 2 and 3. A power cable also connects hard drive 0 and 1.

3. Two hard drive connectors are housed in individual brackets behind the 2.5 inch drive bays. To remove these connectors, squeeze the tabs on the sides of the connectors **(1)**, and the pull the connector out of the bracket **(2)**.

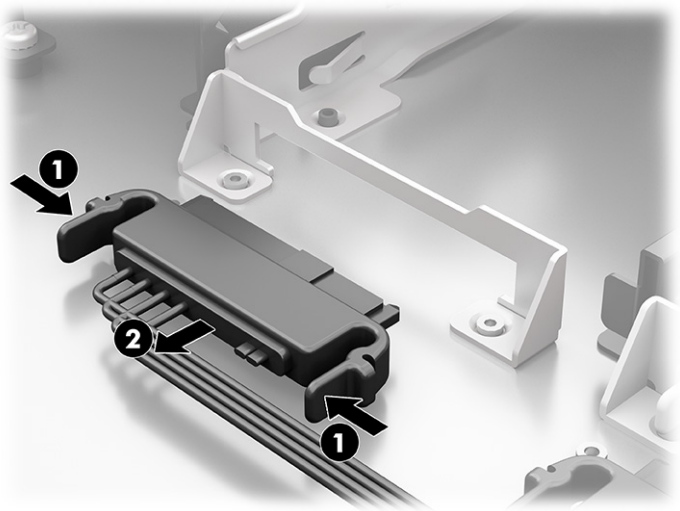

6 Troubleshooting without diagnostics

Use these sections to identify and correct minor problems.

⚠ **CAUTION:** Misuse of the computer or failure to establish a safe and comfortable work environment can result in discomfort or serious injury. See the *Safety & Comfort Guide* at http://www.hp.com/ergo for more information about choosing a workspace and creating a safe and comfortable work environment. For more information, see the *Safety & Regulatory Information* guide.

Before you call for technical support

If you are having problems with the computer, try these solutions to isolate the exact problem before calling for technical support.

- Run the HP diagnostic tool.
- Run the hard drive self-test in Computer Setup.
- Check the power light on the front of the computer to see if it is blinking red. The blinking lights are error codes that will help you diagnose the problem.
- If you are working on a network, plug another computer with a different cable into the network connection. There might be a problem with the network plug or cable.
- If you recently added new hardware, remove the hardware and see if the computer functions properly.
- If you recently installed new software, uninstall the software and see if the computer functions properly.
- Boot the computer to the Safe Mode to see if it will boot without all of the drivers loaded. When booting the operating system, use “Last Known Configuration.”
- See the comprehensive online technical support at http://www.hp.com/support.

Access HP Business Solutions at https://www.hp.com/us-en/solutions/business-solutions.html for the latest online support information, software and drivers, proactive notification, and worldwide community of peers and HP experts.

If it becomes necessary to call for technical assistance, be prepared to do the following tasks to ensure that your service call is handled properly:

- Be in front of your computer when you call.
- Before you call, write down the computer serial number and product ID number.
- Spend time troubleshooting the problem with the service technician.
- Restore the system from the Recovery Disc Set that you created or restore the system to its original factory condition in System Software Requirement Disks (SSRD).

IMPORTANT: Restoring the system will erase all data on the hard drive. Be sure to back up all data files before running the restore process.

NOTE: For sales information and warranty upgrades (Care Packs), call your local authorized service provider or dealer.

Helpful hints

If you encounter problems with the computer or software, see this list of general suggestions before taking further action.

- Check that the computer is plugged into a working electrical outlet.
- Check that the computer is turned on and the white power light is on.
- Be sure the top is installed. The computer will not turn on if the top is open or removed.
- Check the power light on the front of the computer to see if it is blinking red. The blinking lights are error codes that help you diagnose the problem.
- Press and hold any key if the system beeps. Then the keyboard should be operating correctly.
- Check all cable connections for loose connections or incorrect connections.
- Wake the computer by pressing any key on the keyboard or pressing the power button. If the system remains in suspend mode, shut down the computer by pressing and holding the power button for at least four seconds, and then press the power button again to restart the computer. If the system will not shut down, unplug the power cord, wait a few seconds, and then plug it in again. The computer will restart if it is set to turn on automatically as soon as power is restored in Computer Setup. If it does not restart, press the power button to start the computer.
- Be sure that all the needed device drivers have been installed. For example, if you are using a printer, you need a driver for that model printer.
- Remove all bootable media (such as a USB device) from the system before turning it on.
- If you have installed an operating system other than the factory-installed operating system, check to be sure that it is supported on the system.

⚠ WARNING! When the computer is plugged into an AC power source, voltage is always being applied to the system board. You must disconnect the power cord from the power source before opening the computer to prevent system board or component damage.

Diagnostic LEDs and audible codes

Diagnostic information is communicated through the front panel LED (blinks) and system speaker (beeps). Refer to the following codes to determine the issue.

Table 6-1 LED codes and audible codes

Red LED/low pitched beeps	White LED/high pitched beeps	Diagnosis
Two red blinks with low pitched beeps	None	BIOS
Three red blinks with low pitched beeps	Two white blinks with high pitched beeps	Memory
Three red blinks with low pitched beeps	Three white blinks with high pitched beeps	Graphics
Three red blinks with low pitched beeps	Four white blinks with high pitched beeps	Power supply
Three red blinks with low pitched beeps	Five white blinks with high pitched beeps	No CPU

Table 6-1 LED codes and audible codes (continued)

Red LED/low pitched beeps	White LED/high pitched beeps	Diagnosis
Three red blinks with low pitched beeps	Seven white blinks with high pitched beeps	Top cover
Four red blinks with low pitched beeps	None	Thermal
Five red blinks with low pitched beeps	None	System board

- Check that the computer is plugged into a working electrical outlet.
- Check that the computer is turned on and the white power light is on.
- Be sure the top is installed. The computer will not turn on if the top is open or removed.
- Check the power light on the front of the computer to see if it is blinking red. The blinking lights are error codes that help you diagnose the problem.
- If the system beeps, press and hold any key to cause the keyboard to operate correctly.
- Check all cable connections for loose connections or incorrect connections.
- Wake the computer by pressing any key on the keyboard, or by pressing the power button. If the system remains in suspend mode, shut down the computer by pressing and holding the power button for at least four seconds, and then press the power button again to restart the computer. If the system will not shut down, unplug the power cord, wait a few seconds, and then plug it in again. The computer will restart if it is set to turn on automatically as soon as power is restored in Computer Setup. If it does not restart, press the power button to start the computer.
- Be sure that all the needed device drivers have been installed. For example, if you are using a printer, you need a driver for that model of printer.
- Remove all bootable media (such as a USB device) from the system before turning it on.
- If you have installed an operating system other than the factory-installed operating system, check to be sure that it is supported on the system.

⚠ WARNING! When the computer is plugged into an AC power source, voltage is always being applied to the system board. You must disconnect the power cord from the power source before opening the computer to prevent system board or component damage.

Solving general problems

You might be able to easily resolve the general problems described in this section. If a problem persists and you cannot resolve it yourself or if you feel uncomfortable about performing the operation, contact an authorized dealer or reseller.

⚠ WARNING! When the computer is plugged into an AC power source, voltage is always being applied to the system board. To reduce the risk of personal injury from electrical shock, hot surfaces, or both, be sure to disconnect the power cord from the AC outlet and allow the internal system components to cool before touching.

Cannot access the Computer Setup (F10) Utility when booting the computer

Use this information to troubleshoot the computer.

Cause	Solution
The Computer Setup (F10) Utility is set to Fast Boot, causing the F10 access screen to display too briefly when booting the computer.	Before turning on the computer, press and hold f10. Turn on the computer and continue to hold F10 until the Computer Setup (F10) Utility is displayed. - or – Follow the Windows® instructions for rebooting the computer into the Computer Setup (F10) Utility.

Computer appears locked up and will not turn off when the power button is pressed

Use this information to troubleshoot the computer.

Cause	Solution
Software control of the power switch is not functional.	1. Press and hold the power button for at least 4 s until the computer turns off. 2. Disconnect the power cord from the electrical outlet.

Computer will not respond to keyboard or mouse

Use this information to troubleshoot the computer.

Cause	Solution
Computer is in Sleep state.	To resume from Sleep state, press the power button. IMPORTANT: When attempting to resume from Sleep state, do not hold down the power button for more than 4 s. Otherwise, the computer shuts down and you lose any unsaved data.
System has locked up.	Restart computer.
USB cables may not be seated properly.	Disconnect, and then reconnect USB cables to keyboard and mouse.

Computer date and time display is incorrect

Use this information to troubleshoot the computer.

Cause	Solution
RTC (real-time clock) battery may need to be replaced.	Reset the date and time under **Control Panel**. (Computer Setup can also be used to update the RTC date and time.) If the problem persists, replace the RTC battery. See the Removal and Replacement section for instructions about installing a new battery, or contact an authorized dealer or reseller for RTC battery replacement. To access Control Panel in Windows, type `control panel` in the taskbar search box, and then select Control Panel.

Poor performance

Use this information to troubleshoot the computer.

Cause	Solution
Processor is too hot.	1. Be sure that airflow to the computer is not blocked. Leave a 10.2 cm (4 inch) clearance on all vented sides of the computer to permit the required airflow. 2. Be sure that fans are connected and working properly (some fans only operate when needed). 3. Be sure that the processor heat sink is installed properly.
Hard drive is full.	Transfer data from the hard drive to create more space on the hard drive.
Low on memory.	Add more memory.
Hard drive fragmented.	Defragment hard drive.
Program previously accessed did not release reserved memory back to the system.	Restart the computer.
Virus resident on the hard drive.	Run virus protection program.
Too many applications running.	1. Close unnecessary applications to free memory. 2. Add more memory. 3. Some applications run in the background and can be closed by right-clicking their corresponding icons in the task tray.
Some software applications, especially games, are stressful on the graphics subsystem.	1. Lower the display resolution for the current application or consult the documentation that came with the application for suggestions on how to improve performance by adjusting parameters in the application. 2. Add more memory. 3. Upgrade the graphics solution.
Cause unknown.	Restart the computer.

Computer powered off automatically and the power light blinks red four times and then white two times

Use this information to troubleshoot the computer.

Cause	Solution
Processor thermal protection activated. A fan might be blocked or not turning, or the heat sink is not properly attached to the processor.	1. Be sure that the computer air vents are not blocked and the processor cooling fan is running. 2. If the fan is plugged in and not spinning, replace it.

Solving power problems

These tables provide common causes and solutions for power problems.

Three red blinks and seven white blinks with beeps

Computer turns off automatically, power light blinks red three times and white seven times (beeps stop after fifth iteration but lights continue blinking).

Cause	Solution
The top is open or not installed.	Be sure the top is installed. The computer will not turn on if the top is open or removed.

Four red blinks and two white blinks with beeps

Computer turned off automatically, power light blinks red four times and blinks white two times with beeps (beeps stop after fifth iteration but lights continue blinking).

Cause	Solution
Processor thermal protection activated. A fan might be blocked or not turning, or the heat sink is not properly attached to the processor.	1. Be sure that the computer air vents are not blocked and the processor cooling fan is running. 2. Open the access panel, press the power button, and see if the processor fan (or other system fan) spins. If the fan does not spin, be sure that the fan cable is plugged into the system board header. 3. If the fan is plugged in and not spinning, replace it.

Power light blinks red three times and white four times

Power light blinks red three times and white four times followed by a two-second pause and the computer beeps four times (beeps stop after fifth iteration but lights continue blinking)

Cause	Solution
Power failure (power supply is overloaded).	1. Open the access panel, and be sure that the power supply cable is seated into the connector on the system board. 2. Check whether a device is causing the problem by removing all attached devices (such as hard drives or optical drives and expansion cards). Turn on the system. If the system enters POST, then power off and replace one device at a time and repeat this procedure until failure occurs. Replace the device that is causing the failure. Continue adding devices one at a time to ensure all devices are functioning properly. 3. Replace the power supply. 4. Replace the system board.

Solving hard drive problems

These tables provide common causes and solutions for hard drive problems.

Hard drive error occurs

Use this information to troubleshoot the computer.

Cause	Solution
Hard disk has bad sectors or has failed.	1. In Windows, type `file` in the taskbar search box, and then select **File Explorer** from the list of applications. In the left column, expand **This PC**, right-click a drive, select **Properties**, and then select the **Tools** tab. Under **Error checking**, select **Check**. 2. Use a utility to locate and block usage of bad sectors. If necessary, reformat the hard disk.

Disk drive transaction problem

Use this information to troubleshoot the computer.

Cause	Solution
Either the directory structure is bad or there is a problem with a file.	In Windows, type `file` in the taskbar search box, and then select **File Explorer** from the list of applications. In the left column, expand **This PC**, right-click a drive, select **Properties**, and then select the **Tools** tab. Under **Error checking**, select **Check**.

Drive not found (identified)

Use this information to troubleshoot the computer.

Cause	Solution
Cable could be loose.	Check cable connections.
The system might not have automatically recognized a newly installed device.	See reconfiguration directions in the Solving hardware installation problems on page 60 section. If the system still does not recognize the new device, check to see if the device is listed in Computer Setup. If it is listed, the probable cause is a driver problem. If it is not listed, the probable cause is a hardware problem. If this is a newly installed drive, run the Computer Setup utility, and add a POST delay under **Advanced** > **Boot Options**.
The device is attached to a SATA port that has been hidden in Computer Setup.	Run the Computer Setup utility and be sure that **Device Available** is selected for the device's SATA port in **Advanced** > **Port Options**.
Drive responds slowly immediately after startup.	Run Computer Setup and increase the POST Delay in **Advanced** > **Boot Options**.

Nonsystem disk/NTLDR missing message

Use this information to troubleshoot the computer.

Cause	Solution
The system is trying to start from the hard drive, but the hard drive might have been damaged.	Perform Drive Protection System (DPS) testing in system ROM.
System files missing or not properly installed.	1. Insert bootable media and restart the computer. 2. Boot to the windows installation media, and select the recovery option. If only a restore kit is available, then select the **File Backup Program** option, and then restore the system. 3. Install system files for the appropriate operating system.

Hard drive boot has been disabled in Computer Setup.	Run the Computer Setup utility, and enable the hard drive entry in the **Advanced** > **Boot Options** list.
Bootable hard drive is not attached as first in a multiple hard drive configuration.	If attempting to boot from a hard drive, be sure that it is attached to the system board dark blue SATA connector.
Bootable hard drive is not listed first in the Boot Order.	Run the Computer Setup utility, and select **Advanced** > **Boot Options**, and be sure that the bootable hard drive is listed immediately under the **Hard Drive** entry.

Computer will not boot from hard drive

Use this information to troubleshoot the computer.

Cause	Solution
The device is attached to a SATA port that has been hidden in Computer Setup.	1. Check SATA cable connections. 2. Run the Computer Setup utility, and be sure that **Device Available** is selected for the device's SATA port in **Advanced** > **Port Options**.
Boot order is not correct.	Run the Computer Setup utility, and change the boot sequence in **Advanced** > **Boot Options**.
Hard drive is damaged.	Observe whether the front panel power light is blinking red and whether any beeps are heard. See the Worldwide Limited Warranty for terms and conditions.

Computer seems to be locked up

Use this information to troubleshoot the computer.

Cause	Solution
Program in use has stopped responding to commands.	1. Use the task manager to close programs that do not respond. 2. Attempt the normal Windows shutdown procedure. If this fails, press the power button for 4 or more seconds to turn off the power. To restart the computer, press the power button again.

Solving hardware installation problems

You might need to reconfigure the computer when you add or remove hardware, such as an additional drive or expansion card.

If you install a plug and play device, Windows automatically recognizes the device and configures the computer. If you install a device that is not plug and play, you must reconfigure the computer after completing installation of the new hardware. In Windows, use the **Add Hardware Wizard**, and follow the instructions that appear on the screen.

To open the Add Hardware Wizard, open a command prompt and type .

⚠ **WARNING!** When the computer is plugged into an AC power source, voltage is always applied to the system board. To reduce the risk of personal injury from electrical shock, hot surfaces, or both, be sure to disconnect the power cord from the AC outlet and allow the internal system components to cool before touching.

A new device is not recognized as part of the system

Use this information to troubleshoot the computer.

Cause	Solution
Cables of new external device are loose or power cables are unplugged.	Be sure that all cables are properly and securely connected and that pins in the cable or connector are not bent down.
Power switch of new external device is not turned on.	Turn off the computer, turn on the external device, and then turn on the computer to integrate the device with the computer system.
When the system advised you of changes to the configuration, you did not accept them.	Reboot the computer and follow the instructions for accepting the changes.
A plug and play board might not automatically configure when added if the default configuration conflicts with other devices.	Use Windows Device Manager to clear the automatic settings for the board, and choose a basic configuration that does not cause a resource conflict. You can also use Computer Setup to reconfigure or disable devices to resolve the resource conflict. To access Device Manager in Windows, type `device manager` in the taskbar search box, and then select **Device Manager** from the list of applications.
USB ports on the computer are disabled in Computer Setup.	Run the Computer Setup utility and ensure that **Device available** is selected for appropriate USB ports under **Advanced** > **Port Options**.

Computer will not start

Use this information to troubleshoot the computer.

Cause	Solution
Incorrect memory modules were used in the upgrade, or memory modules were installed in the wrong location.	1. Review the documentation that came with the system to determine if you are using the correct memory modules and to verify the proper installation. NOTE: DIMM1 or XMM1 must always be installed. DIMM1 must be installed before DIMM3. 2. Observe the beeps and lights on the front of the computer. Beeps and blinking lights are codes for specific problems. 3. If you still cannot resolve the issue, contact Customer Support.

Three red blinks then two white blinks

Power light blinks red three times and then white two times with beeps.

Cause	Solution
Memory is installed incorrectly or is bad.	IMPORTANT: To avoid damage to the DIMMs or the system board, you must unplug the computer power cord before attempting to reseat, install, or remove a DIMM module. 1. Reseat DIMMs. Turn on the system. 2. Replace DIMMs one at a time to isolate the faulty module. NOTE: DIMM1 or XMM1 must always be installed. DIMM1 must be installed before DIMM3. 3. Replace third-party memory with HP memory. 4. Replace the system board.

Solving network problems

Some common causes and solutions for network problems are listed in these tables. The guidelines do not discuss the process of debugging the network cabling.

Network driver does not detect network controller

Use this information to troubleshoot the computer.

Cause	Solution
Network controller is disabled.	1. Run Computer Setup and enable network controller. 2. Enable the network controller in the operating system using Device Manager. To access Device Manager in Windows, type `device manager` in the taskbar search box, and then select **Device Manager** from the list of applications.
Incorrect network driver.	Check the network controller documentation for the correct driver or obtain the latest driver from the manufacturer's website.

Network status link light never blinks

Use this information to troubleshoot the computer.

NOTE: The network status light is supposed to blink when there is network activity.

Cause	Solution
No active network is detected.	Check cabling and network equipment for proper connection.
Network controller is not set up properly.	Check for the device status within Windows, such as Device Manager for driver load and the Network Connections applet within Windows for link status. To access Device Manager in Windows, type `device manager` in the taskbar search box, and then select **Device Manager** from the list of applications.

Network controller is disabled.	1. Run Computer Setup and enable network controller. 2. Enable the network controller in the operating system using Device Manager. To access Device Manager in Windows, type `device manager` in the taskbar search box, and then select **Device Manager** from the list of applications.
Network driver is not properly loaded.	Reinstall network drivers.
System cannot autosense the network.	Disable autosensing capabilities, and force the system into the correct operating mode.

Diagnostics reports a failure

Use this information to troubleshoot the computer.

Cause	Solution
The cable is not securely connected.	Be sure that the cable is securely attached to the network connector and that the other end of the cable is securely attached to the correct device.
The cable is attached to the incorrect connector.	Be sure that the cable is attached to the correct connector.
There is a problem with the cable or a device at the other end of the cable.	Be sure that the cable and device at the other end are operating correctly.
The network controller is defective.	Contact an authorized service provider.

Diagnostics passes, but the computer does not communicate with the network

Use this information to troubleshoot the computer.

Cause	Solution
Network drivers are not loaded, or driver parameters do not match current configuration.	Be sure that the network drivers are loaded and that the driver parameters match the configuration of the network controller. Be sure that the correct network client and protocol are installed.
The network controller is not configured for this computer.	Select the **Network and Sharing Center** icon in the **Control Panel**, and configure the network controller. To access Control Panel in Windows, type `control panel` in the taskbar search box, and then select **Control Panel** from the list of applications.

Network controller stopped working when an expansion board was added to the computer

Use this information to troubleshoot the computer.

Cause	Solution
The network controller requires drivers.	Verify that the drivers were not accidentally deleted when the drivers for a new expansion board were installed.

Network controller stops working without apparent cause

Use this information to troubleshoot the computer.

Cause	Solution
The cable is not securely connected.	Be sure that the cable is securely attached to the network connector, and that the other end of the cable is securely attached to the correct device.
The network controller is defective.	Contact an authorized service provider.

Cannot connect to network server when attempting remote system installation

Use this information to troubleshoot the computer.

Cause	Solution
The network controller is not configured properly.	Verify that network connectivity exists, a DHCP Server is present, and the Remote System Installation Server contains the network interface card (NIC) drivers for your NIC.

System setup utility reports unprogrammed EEPROM

Use this information to troubleshoot the computer.

Cause	Solution
Unprogrammed EEPROM.	Contact an authorized service provider.

Solving memory problems

If you encounter memory problems, some common causes and solutions are listed in these tables.

IMPORTANT: Depending on the Management Engine (ME) settings, power can still be supplied to the DIMMs when the computer is turned off. To avoid damage to the DIMMs or the system board, you must unplug the computer power cord before attempting to reseat, install, or remove a memory module.

For those systems that support error correction code (ECC) memory, HP does not support mixing ECC and non-ECC memory. Otherwise, the computer will not boot the operating system.

NOTE: The memory count will be affected by configurations with the ME enabled. The ME uses 8 MB of system memory in single-channel mode or 16 MB of memory in dual-channel mode to download, decompress, and execute the ME firmware for Out-of-Band (OOB), third-party data storage, and other management functions.

System will not boot or does not function properly after installing additional memory modules

Use this information to troubleshoot the computer.

Cause	Solution
A memory module is not installed in the DIMM1 or XMM1 socket.	Verify that a memory module is installed in the DIMM1 or XMM1 socket on the system board. This socket must be populated with a memory module.
Memory module is not the correct type or speed grade for the system, or the new memory module is not seated properly.	Replace module with the correct industry-standard device for the computer. On some models, ECC and non-ECC memory modules cannot be mixed.

Out of memory error

Use this information to troubleshoot the computer.

Cause	Solution
You have run out of memory to run the application.	Check the application documentation to determine the memory requirements.

Memory count during POST is wrong

Use this information to troubleshoot the computer.

Cause	Solution
The memory modules might not be installed correctly.	Check that the memory modules have been installed correctly and that proper modules are used.
Integrated graphics might use system memory.	No action required.

Insufficient memory error during operation.

Use this information to troubleshoot the computer.

Cause	Solution
Too many Terminate and Stay Resident programs (TSRs) are installed.	Delete any TSRs that you do not need.
You have run out of memory for the application.	Check the memory requirements for the application or add more memory to the computer.

Solving USB flash drive problems

If you encounter USB flash drive problems, common causes and solutions are listed in these tables.

USB flash drive is not seen as a drive letter in Windows

Use this information to troubleshoot the computer.

Cause	Solution
The drive letter after the last physical drive is not available.	Change the default drive letter for the flash drive in Windows.

USB flash drive not found (identified)

Use this information to troubleshoot the computer.

Cause	Solution
The device is attached to a USB port that has been hidden in Computer Setup.	Run the Computer Setup utility and enable the USB ports in **Advanced** > **Port Options**.
The device was not properly seated before startup.	Be sure that the device is fully inserted into the USB port before applying power to the system

System will not boot from USB flash drive

Use this information to troubleshoot the computer.

Cause	Solution
Boot order is not correct.	Run the Computer Setup utility, and change the boot sequence in **Advanced** > **Boot Options**.
Removable Media Boot is disabled in the Computer Setup utility.	Run the Computer Setup utility, and enable booting to removable media in **Advanced** > **Boot Options**. Be sure that USB is enabled in **Storage** > **Boot Order**.

The computer boots to DOS after making a bootable flash drive

Use this information to troubleshoot the computer.

Cause	Solution
Flash drive is bootable.	Install the flash drive only after the operating system boots.
Flash drive is defective.	Try a different flash drive.

Solving internet access problems

If you encounter internet access problems, consult your internet service provider (ISP), or see the common causes and solutions listed in these tables.

Unable to connect to the internet

Use this information to troubleshoot the computer.

Cause	Solution
Internet Service Provider (ISP) account is not set up properly.	Verify Internet settings, or contact your ISP for assistance.
Web browser is not set up properly.	Verify that the web browser is installed and set up to work with your ISP.
Cable/DSL modem is not plugged in.	Plug in the cable/DSL modem. You should see a power light on the front of the cable/DSL modem.
Cable/DSL service is not available or has been interrupted due to bad weather.	Try connecting to the internet at a later time or contact your ISP. If the cable/DSL service is connected, the cable light on the front of the cable/DSL modem will be on.
The CAT5 UTP cable is disconnected.	Connect the CAT5 UTP cable between the cable modem and the computer's RJ-45 connector. If the connection is good, the PC light on the front of the cable/DSL modem will be on.
IP address is not configured properly.	Contact your ISP for the correct IP address.
Cookies are corrupted. A *cookie* is a small piece of information that a web server can store temporarily with the web browser. Cookies are useful because they enable the browser to remember some specific information that the Web server can later retrieve.	1. Type `control panel` in the taskbar search box, and then select **Control Panel** from the list of applications. 2. Select **Internet Options**. 3. In the **Browsing history** section, select the **Delete** button. 4. Select the **Cookies and website data** check box, and select the **Delete** button.

Cannot automatically launch internet programs

Use this information to troubleshoot the computer.

Cause	Solution
You must log on to your ISP before some programs will start.	Log on to your ISP and launch the program.

Solving software problems

Most software problems occur as a result of these situations:

- The application was not installed or configured correctly.
- Insufficient memory is available to run the application.
- A conflict exists between applications.
- All the necessary device drivers might not have been installed.
- If you have installed an operating system other than the factory-installed operating system, it might not be supported on the system.

If you encounter software problems, see the applicable solutions listed in the following table.

Computer will not start up and the HP logo does not appear

Use this information to troubleshoot the computer.

Cause	Solution
ROM issue - POST error has occurred.	Observe the beeps and lights on the front of the computer. See the Worldwide Limited Warranty for terms and conditions.

“Illegal Operation has Occurred” error message is displayed

Use this information to troubleshoot the computer.

Cause	Solution
Software being used is not Microsoft-certified for your version of Windows.	Verify that the software is certified by Microsoft® for your version of Windows (see program packaging for this information).
Configuration files are corrupt.	If possible, save all data, close all programs, and restart the computer.

7 Computer Setup (F10) Utility

This information provides details of the Computer Setup Utility.

- Change settings from the defaults or restore the settings to default values.
- View the system configuration, including settings for processor, graphics, memory, audio, storage, communications, and input devices.
- Modify the boot order of bootable devices such as hard drives or USB flash media devices.
- Enter the Asset Tag or property identification number assigned by the company to this computer.
- Enable the power-on password prompt during system restarts (warm boots) as well as during startup.
- Establish an administrator password that controls access to the Computer Setup (F10) Utility and the settings described in this section.
- Establish minimum requirements for valid passwords, including length and required types of characters.
- Secure integrated I/O functionality, including the serial, USB, or audio, or embedded NIC, so that they cannot be used until they are unsecured.
- Enable or disable different types of boot sources.
- Configure features such as Secure Boot, power management, virtualization support, and language and keyboard type used in Setup and POST.
- Replicate the system setup by saving system configuration information about a USB device and restoring it on one or more computers.
- Enable or disable DriveLock security or securely erase a hard drive.

Using Computer Setup (F10) Utilities

You can access Computer Setup only by turning the computer on or restarting the system.

To access the Computer Setup Utilities menu, complete these steps:

1. Turn on or restart the computer.
2. Repeatedly press f10 when the power button light turns white to access the utility.

   You can also press esc to see a menu that allows you to access different options available at startup, including the Computer Setup utility.

   A choice of four headings appears in the Computer Setup Utilities menu: Main, Security, Advanced, and UEFI Drivers.

NOTE: If you do not press f10 at the appropriate time, you must restart the computer and again repeatedly press f10 when the power button light turns white to access the utility.

NOTE: Selecting UEFI Drivers restarts the computer into the third-party option ROM management application. You can access this application directly by pressing f3 during startup.

3. Use the arrow (left and right) keys to select the appropriate heading. Use the arrow (up and down) keys to select the option you want, and then press enter. To return to the Computer Setup Utilities menu, press esc.

4. To apply and save changes, select **Main** > **Save Changes and Exit**.

   - If you have made changes that you do not want applied, select **Ignore Changes and Exit**.
   - To restore settings from the Advanced and Main menus to original values, select **Apply Factory Defaults and Exit**.
   - To restore settings from the Advanced and Main menus to those previously saved by **Save Custom Defaults**, select **Apply Custom Defaults and Exit**. If no custom defaults have been saved, factory defaults are used.

NOTE: You cannot modify settings in the Security menu by selecting **Apply Defaults**. You reset those values by selecting **Restore Security Settings to Factory Defaults** at the bottom of the **Security** menu.

NOTE: Not all settings shown in the following sections are available for all models.

IMPORTANT: Do not turn computer power off while the BIOS is saving the Computer Setup (F10) changes because the settings could become corrupted. It is safe to turn off the computer only after exiting the F10 Setup screen.

Computer Setup—Main

This table provides information about the Computer Setup Main menu.

NOTE: Support for specific Computer Setup options can vary, depending on the hardware configuration.

Table 7-1 **Computer Setup—Main**

Option	Description
System Information	Lists all information in following list if **Advanced System Information** is selected. Lists smaller subset if **Basic System Information** is selected. • Product name • Installed memory size • Storage Devices • Processor type • Processor cache size (L1/L2/L3) • Processor speed • Processor Cores • MicroCode revision • Processor stepping • Memory speed • DIMM size (for each installed module) • System BIOS version • ME Firmware version (Intel only) • ME Firmware Mode • PMC Firmware Version • PCH Firmware Version • SPHY Firmware Version • Audio Controller • Reference code revision • Super I/O firmware version • Intel VROC Upgrade Key Version • USB Type-C controller firmware Version • Born on date • Serial number • SKU number • UUID (Universally Unique Identifier) • SMBIOS UUID • Asset tracking number • Feature byte • Build ID • Product family • System board ID • System board CT number • Embedded LAN Controller (AMT) MAC Address

Table 7-1 Computer Setup—Main (continued)

Option	Description
System Diagnostics	If the hard drive has the HP Advanced Diagnostics installed, the application launches. If HP Advanced Diagnostics is not installed, a basic version that is built into the BIOS provides the capability to perform the following functions: • Processor • Memory Test • Storage Tests • System Board Test • Keyboard Test • Language

Table 7-1 Computer Setup—Main (continued)

Option	Description
Update System BIOS	Lets you update the system BIOS from www.hp.com or another network server, from a removable USB drive, or from a file located on the hard drive. • Check [current selection] for BIOS Updates The string that appears here depends on the setting in **BIOS Update Preferences**. • Lock BIOS Version If this option is selected, the system is locked to the current BIOS version, and updates are not allowed. • BIOS Rollback Policy ▪ Unrestricted Rollback to older BIOS: Lets you roll back to any previous version of BIOS. ▪ Restricted Rollback to older BIOS: If selected, **Minimum BIOS Version** becomes active, which lets you manually enter the minimum BIOS version that you can roll back to. • Allow BIOS Updates Using a Network • BIOS Update Preferences ▪ Check for Update on Next Reboot: Default is disabled. ▪ BIOS Source: Lets you select either HP.com or a custom URL. If **Custom URL** is selected, **Edit Custom URL** becomes active. HP recommends using a custom URL only for a managed IT environment. ▪ Automatic BIOS Update Setting Allows configuration of a periodic check for updates: NOTE: If Microsoft® Windows® BitLocker Drive Encryption (BDE) is enabled, it must be temporarily suspended before the BIOS is flashed. ▪ Do not update ▪ Checking for updates and prompt the user to accept or reject the update at that time ▪ Checking for updates and install all new versions ▪ Checking for updates and install only new versions marked important ▪ BIOS Update Frequency ▪ Daily ▪ Weekly ▪ Monthly (default) • Network Configuration Settings Lets you configure the network connection to the server that is the host for system firmware updates. • Update BIOS Using Local Media Lets you access files on either USB storage or the hard drive. The HP BIOS Update and Recovery application included in BIOS Softpaqs at www.hp.com copies the BIOS file to the correct location on the hard drive or USB device.
Change date and time	Lets you update system date and time.

Table 7-1 Computer Setup—Main (continued)

Option	Description
System IDs	Lets you set the following values: • Asset Tracking Number • Ownership Tag
Replicated Setup	**Back up current settings to USB device** Saves system configuration to a formatted USB flash media device. **Restore current settings from USB device** Restores system configuration from a USB flash media device.
Save Custom Defaults	Saves the current system configuration settings as the custom default set.
Apply Custom Defaults and Exit	Applies the custom default settings to the computer after rebooting. Does not apply to options in the **Security** menu.
Apply Factory Defaults and Exit	Restores the factory system configuration settings to the computer after rebooting. Does not apply to options in the **Security** menu.
Ignore Changes and Exit	Exits Computer Setup without applying or saving any changes.
Save Changes and Exit	Saves changes to current system configuration, exits Computer Setup, and reboots.
Suppress POST errors	Select to turn off any errors generated by Power On Self Test (POST) during boot up.

Computer Setup—Security

This table provides information about the Computer Setup Security menu.

NOTE: Support for specific Computer Setup options can vary, depending on the hardware configuration.

Table 7-2 Computer Setup—Security

Option	Description
Create BIOS Administrator Password	Lets you set and enable a BIOS administrator password, which controls access to the following features: • Setup Menu (F10) • Third-Party Option ROM Management (F3) • Update system ROM • WMI commands that change system settings • BIOS Configuration Utility (BCU) • Alternative power-on password NOTE: If the password is set, you must change Computer Setup options, update the BIOS, and make changes to certain plug-and-play settings under Windows.

Table 7-2 Computer Setup—Security (continued)

Option	Description
Change BIOS Administrator Password (This selection is active only if a BIOS administrator password is set.)	Lets you change the BIOS administrator password. You must know the current password to be able to change it.
Create POST Power-On Password	Lets you change or delete power-on password. The power-on password prompt appears after a power cycle or reboot. If the user does not enter the correct power-on password, the unit will not boot.
Change POST Power-On Password (This selection is active only if a BIOS administrator password is set.)	Lets you change the POST power-on password. You must know the current password to be able to change it.
Password Policies	Let you set the guidelines for a valid password. Options include: • Password minimum length • Requires at least one symbol • Requires at least one number • Requires at least one uppercase character • Requires at least one lowercase character • Allow spaces **Clear Password Jumper** Select **Honor** to allow or **Ignore** to not allow the absence of the password jumper to clear the passwords at startup. Default is **Honor**.

Table 7-2 Computer Setup—Security (continued)

Option	Description
Security Configuration	**TPM Embedded Security** • **TPM Specification Version** Displays the current Trusted Platform Module (TPM) version. • **TPM Device** Lets you set the TPM as available or hidden. • **TPM State** Select to enable the TPM. • **Clear TPM** Select to reset the TPM to an unowned state. After the TPM is cleared, it is also turned off. To temporarily suspend TPM operations, turn the TPM off instead of clearing it. IMPORTANT: Clearing the TPM resets it to factory defaults and turns it off. You will lose all created keys and data protected by those keys. • **TPM Activation Policy** ○ F1 to boot ○ Allow user to reject ○ No prompts **BIOS Sure Start** • Verify Boot Block on every boot: Select to enable HP SureStart. • BIOS Data Recovery Policy: Select Automatic or Manual to determine data recovery process. Manual recovery is intended only for situations when you want forensic analysis before HP SureStart recovery. When this policy is set to manual, HP SureStart will not correct any issues that are found until the local user enters the manual recovery key sequence. This can result in a computer that cannot boot until the manual recovery key sequence is entered. • Dynamic Runtime Scanning of Boot Block: Verifies the integrity of the BIOS boot block region several times each hour while the computer is running. Default is Enabled. • Sure Start BIOS Settings Protection: When enabled, HP Sure Start locks all critical BIOS settings and provides enhanced protection for these settings using nonvolatile (flash) memory. NOTE: An administrator password must be set to activate this setting. • Enhanced HP Firmware Runtime Intrusion Prevention and Detection: Enables monitoring of HP system firmware executing out of main memory while the operating system is running. Any anomalies detected in HP system firmware that is active while the operating system is running will result in a Sure Start security event being generated. • Sure Start Security Event Policy: Controls HP Sure Start behavior upon identifying a critical security event (any modification to HP firmware) while the operating system is running. – Log Event Only: HP Sure Start will log all critical security events in the HP Sure Start audio log within the HP Sure Start nonvolatile (flash) memory. – Log Event and notify user: In addition to logging all critical security events, HP Sure Start will notify the user within the operating system that a critical event has occurred. – Log Event and power off system: In addition to logging all critical security events, HP Sure Start turns of the computer upon detecting a HP Sure Start Security Event. Because of the potential for data loss, HP recommends this setting only in situations where security integrity of the system is a higher priority than the risk of potential data loss. **Smart Cover** • Cover Removal Sensor (Disabled/Notify user/Administrator password) Lets you disable the cover sensor or configure what action is taken if the computer cover is removed. Default is Disabled.

Table 7-2 Computer Setup—Security (continued)

Option	Description
Utilities	Hard Drive Utilities

- **Save/Restore MBR of System Hard Drive**

  NOTE: Windows 10 systems are generally not formatted to include an Master Boot Record (MBR). Instead they use GUID Partition Table (GPT) format, which better supports large hard drives.
  Enabling this feature saves the MBR of the system hard drive. If the MBR gets changed, the user is prompted to restore the MBR. Default is disabled.

  The MBR contains information needed to successfully boot from a disk and to access the data stored on the disk. Master Boot Record Security can prevent unintentional or malicious changes to the MBR, such as those caused by some viruses or by the incorrect use of certain disk utilities. It also allows you to recover the "last known good" MBR, should changes to the MBR be detected when the system is restarted.

  NOTE: Most operating systems control access to the MBR of the current bootable disk; the BIOS cannot prevent changes that might occur while the operating system is running.

  Restores the backup Master Boot Record to the current bootable disk. Default is disabled.

  The restore option appears if all of the following conditions are true:

  – MBR security is enabled.

  – A backup copy of the MBR has been previously saved.

  – The current bootable disk is the same disk from which the backup copy was saved.

  IMPORTANT: If you restoring a previously saved MBR after a disk utility or operating system modified the MBR, the data on the disk might become inaccessible. Only restore a previously saved MBR if you are confident that the current bootable disk's MBR has been corrupted or infected with a virus.

- **Save/Restore GPT of System Hard Drive**

  Enabling this feature saves the GUID Partition Table (GPT) of the system hard drive. If the GPT is subsequently changed, the user is prompted to choose whether to restore GPT.

- **DriveLock/Automatic DriveLock**

  Allows you to assign or modify a master or user password for hard drives. When this feature is enabled, the user is prompted to provide one of the DriveLock passwords during POST. If neither is successfully entered, the hard drive remains inaccessible until one of the passwords is successfully provided during a subsequent cold-boot sequence.

  NOTE: This selection appears only when at least one drive that supports the DriveLock feature is attached to the system.

  IMPORTANT: Be aware that these settings take place immediately. It is not necessary to save.

  IMPORTANT: Be sure to document the DriveLock password. Losing a DriveLock password will render a drive permanently locked.

  After you select a drive, the following options are available:

  - Set DriveLock Master Password. Sets the drive's master password but does not enable DriveLock.

  - Enable DriveLock. Sets the drive's user password and enables DriveLock.

- **Secure Erase**

  Lets you select a hard drive to completely erase.

  After you erase a hard drive with a program that uses Secure Erase firmware commands, no file recovery program, partition recovery program, or other data recovery method can extract data from the drive.

- **Allow OPAL Hard Drive SID Authentication**

  BIOS supports drive encryption using the DriveLock feature by creating the storage device's

Table 7-2 Computer Setup—Security (continued)

Option	Description
System Management Command	Allows authorized personnel to reset security settings during a service event. Default is enabled.
Restore Security Settings to Factory Default	This action resets security devices, clears BIOS passwords (not including DriveLock), and restores settings in the **Security menu** to factory defaults.

Computer Setup—Advanced

This table provides information about the Computer Setup Advanced menu.

NOTE: Support for specific Computer Setup options can vary, depending on the hardware configuration.

Table 7-3 Computer Setup—Advanced (for advanced users)

Option	Heading
Display Language	Lets you select the language of the menus in F10 Setup and the keyboard layout.
Scheduled Power-On	This feature wakes the system when it is off at a specified date and time.

Table 7-3 Computer Setup—Advanced (for advanced users) (continued)

Option	Heading
Boot Options	Select the devices that the computer can boot from, as well as other options, including: • Startup Delay (sec). Enabling this feature adds a user-specified delay to the POST process. One purpose for the delay is to provide additional time to activate hotkeys such as esc for the Startup Menu or f10 for Computer Setup. • Fast Boot: Default is enabled. • USB Storage Boot: Default is enabled. • Network (PXE) Boot: Default is enabled. • After Power Loss: Default is Power Off. ■ Power off: Causes the computer to remain off when power is restored. ■ Power on: Causes the computer to turn on automatically as soon as power is restored. ■ Previous state: Causes the computer to turn on automatically as soon as power is restored, if it was on when power was lost. NOTE: If the system is configured to Power On from Keyboard Ports (see Power Management Options), this setting is forced to Power On. • Prompt on Memory Size Change. Default is enabled. • Prompt on Fixed Storage Change. Default is disabled. • Audio Alerts During Boot. Default is enabled. When disabled, most audible beeps from errors, warnings, and password prompts during boot up are suppressed. • UEFI Boot Order Default is enabled. Specify the order used to check UEFI boot sources (such as a internal hard drive, USB hard drive, USB optical drive, or internal optical drive) for a bootable operating system image. UEFI boot sources always have precedence over legacy boot sources. • Legacy Boot Order Specify the order used to check legacy boot sources (such as a network interface card, internal hard drive, USB optical drive, or internal optical drive) for a bootable operating system image. Specify the order of attached hard drives. The first hard drive in the order has priority in the boot sequence and is recognized as drive C (if any devices are attached). NOTE: To drag a device to a preferred place, press enter. NOTE: MS-DOS drive lettering assignments might not apply after a non-MS-DOS operating system has started. **Shortcut to Temporarily Override Boot Order** To boot **one time** from a device other than the default device specified in Boot Order, restart the computer and press esc (to access the Startup menu) and then f9 (Boot Menu), or only f9 (skipping the Startup menu) when the power button light turns white. After POST is completed, a list of bootable devices is displayed. Use the arrow keys to select the preferred bootable device and press enter. The computer then boots from the selected non-default device for this one time.

Table 7-3 Computer Setup—Advanced (for advanced users) (continued)

Option	Heading
Secure Boot Configuration	**Configure Legacy Support and Secure Boot** Lets you turn off all legacy support on the computer, including booting to DOS, running legacy graphics cards, booting to legacy devices, and so on. Lets you be sure that an operating system is legitimate before booting to it, making Windows resistant to malicious modification from preboot to full operating system booting, preventing firmware attacks. UEFI and Windows Secure Boot only allow code signed by preapproved digital certificates to run during the firmware and OS boot process. • Legacy Support Enable and Secure Boot Disable • Legacy Support Disable and Secure Boot Enable • Legacy Support Disable and Secure Boot Disable Default is Legacy Support Disable and Secure Boot Disable. **Secure Boot Key Management** Lets you manage the custom key settings. **Import Custom Secure Boot keys** Default is disabled. **Clear Secure Boot Keys** Lets you delete any previously loaded custom boot keys. Clearing keys will disable secure boot. Default is disabled. **Reset Secure Boot keys to factory defaults** Default is disabled. **Enable MS UEFI CA key** Disabling this setting alters the Secure Boot key list to further restrict the allowed software components. Set this option to disable support to Device Guard. **Ready BIOS for Device Guard Use** Requires BIOS Administrator password to be configured and Secure Boot to be enabled.

Table 7-3 Computer Setup—Advanced (for advanced users) (continued)

Option	Heading
System Options	**Configure storage controller for Intel Optane** Enables the Intel® Optane™ memory module. **Hyperthreading** Lets you control processor capability. Default is enabled. **Active Core Count** Use this option to determine the number of cores to enable for the processor. **Virtualization Technology (VTx)** (Intel only) Controls the virtualization features of the processor. Changing this setting requires turning the computer off and then back on. Default is disabled. **Virtualization Technology for Directed I/O (VTd)** (Intel only) Controls virtualization DMA remapping features of the chipset. Changing this setting requires turning the computer off and then back on. Default is disabled. **M.2 SSD** Lets you disable the M.2 solid-state drive slot. Default is enabled. **M.2 WLAN/BT** Lets you disable the wireless module slot. Default is enabled. **Allow PCIe/PCI SERR# Interrupt** (enable/disable) Allows PCI devices to report PCI/PCIe System Error signals, such as address parity errors, data parity errors, and critical errors other than parity. Default is enabled. **Power Button Override** (disable/4 sec/15 sec) Lets you disable or enable and select the number of seconds you have to hold down the power button for it to force the system to turn off. Default is 4 sec. **WMI Events for HP Notifications** (enable/disable) Enable or disable Windows 10 desktop toast notifications for hardware failures (power supply failures, fan stall, thermal events). Default is enabled. Requires HP Notifications version 1.1.26.1 or greater.

Table 7-3 Computer Setup—Advanced (for advanced users) (continued)

Option	Heading
Built-In Device Options	**Embedded LAN Controller** Select to show the device in the operating system. Default is enabled. **Wake On LAN** Lets you either disable the Wake On LAN feature or configure where the computer boots, including the network or hard drive. Default is Boot to Network. **Allow No Panel configuration** When enabled, POST blink and beep codes and error messages are not generated. Default is disabled. **Video memory size** Use this option to manage graphics memory allocation. The value you choose is allocated permanently to graphics and is unavailable to the operating system. **Integrated Camera** Clear to disable the integrated camera. Default is enabled. **Audio Device** Select to show the device in the operating system. Default is enabled. **Integrated Microphone** Clear to disable the integrated microphone. This does not affect devices plugged into audio jacks. Default is enabled. **Internal Speakers** (does not affect external speakers) Clear to disable the chassis speaker or speakers. This function is applicable to normal audio playback in the operating system and does not affect the error or warning beeps during POST. Default is enabled. **Headphone Output** Clear to disable the headphone jack. Default is enabled. **Collaboration Buttons** Clear to disable the collaboration buttons. Default is enabled. **Button Sensitivity** Select from low, medium, or high. Default is low. **LAN/WLAN auto switching** Select to enable auto switching between a wired and wireless connection. Default is disabled. **Wake on WLAN** Select to enable wake on WLAN. Default is disabled. **M.2 USB/Bluetooth®** Select to enable the M.2 controller. Default is enabled. **Increase Idle Fan Speed(%)** Sets idle fan speed percentage. This setting only changes the minimum fan speed. The fan is still automatically controlled.

Table 7-3 Computer Setup—Advanced (for advanced users) (continued)

Option	Heading
Port Options	**SATA0** Lets you disable the connector. Default is enabled. **Rear USB ports** Lets you disable the ports. Default is enabled. **Front and Internal USB ports** Lets you disable the ports. Default is enabled.
Option ROM Launch Policy	These policies control whether Legacy Option ROMs or UEFI drivers are loaded. Default is All UEFI. **Configure Option ROM Launch Policy** • All legacy • All UEFI • All UEFI except video

Table 7-3 Computer Setup—Advanced (for advanced users) (continued)

Option	Heading
Power Management Options	**Runtime Power Management** (enable/disable) Allows certain operating systems to reduce processor voltage and frequency when the current software load does not require the full capabilities of the processor. Default is enabled. **Extended Idle Power States** (enable/disable) Allows certain operating systems to decrease the processors power consumption when the processor is idle. Default is enabled. **S5 Maximum Power Savings** (enable/disable) Enabling this feature reduces the power of the system as much as possible in the S5 state. Power is removed from the wake up circuitry, the expansion slots, and any management features while in S5. Default is disabled. **SATA Power Management** (enable/disable) Enables or disables SATA bus, device power management, or both. Default is enabled. **PCI Express Power Management** (enable/disable) Enabling this option permits the PCI Express links to use Active Power State Management (ASPM) to enter lower power states while not in use. Default is enabled. **Power On from Keyboard Ports** (enable/disable) When enabled, this feature allows a key press to turn on the system when it is off (S5 state). If using a USB keyboard, you must plug it into one of the rear ports labeled with the keyboard icon. Default is disabled. **Unique Sleep State Blink Rates** (enable/disable) This feature is designed to provide a visual indication of what Sleep state the system is in. Each Sleep state has a unique blink pattern. Default is disabled. NOTE: A normal shutdown goes to the S4 state for Windows 8 or later. S0 (On) = solid white light. S3 (Stand By) = 3 blinks at 1 Hz (50% duty cycle) followed by a pause of 2 seconds (white light), repeated cycles of 3 blinks and a pause. S4 (Hibernation) = 4 blinks at 1 Hz (50% duty cycle) followed by a pause of 2 seconds (white light), repeated cycles of 4 blinks and a pause. S5 (Soft Off) = Light is off.
Power supply options	**Power Supply 1 Status** (Providing Power/Detected but not Providing Power/Not Detected). **Power Supply 2 Status** (Providing Power/Detected but not Providing Power/Not Detected). **Update Status**. Allows you to update the Power Supply 1/2 Status fields if a configuration change has been made (removing or replacing a faulted power supply after entering the menu). **Power Supply Mode** (Aggregate/Redundant). Default is Aggregate. This option does not display until a second power supply is installed, at which point this option persists until factory defaults have been applied.
Electronic labels	Displays system labels.

Table 7-3 Computer Setup—Advanced (for advanced users) (continued)

Option	Heading
Remote Management Options	**Active Management Technology (AMT)** (Intel only) (enable/disable). Default is enabled. Allows you to discover, repair, and protect networked computing devices. **USB Key Provisioning Support** (enable/disable) Default is disabled. **USB Redirection Support** (enable/disable). Default is enabled. USB redirection allows USB devices plugged into a client computer to be transparently redirected to the guest operating system. **Unconfigure AMT on next boot** (Do Not Apply/Apply). Default is Do Not Apply. **SOL Terminal Emulation Mode** (ANSI / VT100). Default is ANSI. Serial-over-LAN (SOL) terminal emulation mode is only activated during remote AMT redirection operations. The emulation options allow administrators to select which mode works best with their console. **Show Unconfigure ME Confirmation Prompt** (enable/disable). Default is enabled. **Verbose Boot Messages** (enable/disable). Default is enabled. Verbose boot shows additional logging information during startup, which is mainly for debugging if something goes wrong during startup. **Watchdog Timer** (enable/disable). Default is enabled. Allows you to set amount of time for a operating system and BIOS watchdog alert to be sent if the timers are not deactivated. BIOS watchdog is deactivated by BIOS and would indicate that a halt occurred during execution if the alert is sent to the management console. An operating system alert is deactivated by the operating system image and would indicate that a hang occurred during its initialization. • OS Watchdog Timer (min.) – (5/10/15/20/25). Default is 5 min. • BIOS Watchdog Timer (min.) – (5/10/15/20/25). Default is 5 min. **CIRA Timeout (min.)** (1/2/3/4/Never) CIRA is Customer Initiated Remote Assistance, an Intel service to help users employing Active Management Technology (AMT).

8 Password security and resetting CMOS

This computer supports two security password features that you can establish through the Computer Setup Utilities menu: administrator password and power-on password.

When you establish only an administrator password, any user can access all the information on the computer except Computer Setup. When you establish only a power-on password, the power-on password is required to access Computer Setup and any other information on the computer. When you establish both passwords, only the administrator password will give you access to Computer Setup.

When both passwords are set, you can use the administrator password in place of the power-on password as an override to log in to the computer. This feature is useful for a network administrator.

IMPORTANT: Back up the BIOS settings or save them as custom defaults in case you need them later. You can back up in Computer Setup or with the BiosConfigUtility tool available from www.hp.com. See Computer Setup (F10) Utility on page 68 for information about backing up the BIOS settings.

Changing a setup or power-on password

Use this procedure to change a password.

To change the power-on or setup password, complete the following steps:

1. Turn on or restart the computer.

   To change the setup password, go to step 2.

   To change the power-on password, go to step 3.

2. To change the setup password, as soon as the computer turns on:

   - Press esc while the “Press the ESC key for Startup Menu” message is displayed.

   - Press f10 to enter Computer Setup.

3. When the key icon appears, type your current password, a slash (/) or alternate delimiter character, your new password, another slash (/) or alternate delimiter character, and your new password again as shown:

   current password/new password/new password

   NOTE: Type the new password carefully because the characters do not appear on the screen.

4. Press enter.

The new password will take effect the next time the computer is restarted.

Deleting a setup or power-on password

Use this procedure to delete a password.

To delete the power-on or setup password, complete the following steps:

1. Turn on or restart the computer.

   To delete the Setup password, go to step 2.

   To delete the Power-on password, go to step 3.

2. To delete the Setup password, as soon as the computer turns on:

   - Press esc while the “Press the ESC key for Startup Menu” message is displayed.

   - Press f10 to enter Computer Setup.

3. When the key icon appears, type your current password, a slash (/) or alternate delimiter character, your new password, another slash (/) or alternate delimiter character, and your new password again as shown:

   current password/new password/new password

4. Press enter.

Clearing and resetting the CMOS

Use this procedure to clear and reset the CMOS.

The computer’s configuration memory (CMOS) stores information about the computer’s configuration.

The CMOS button resets CMOS but does not clear the power-on and setup passwords.

1. Turn off the computer and any external devices, and disconnect the power cord from the power outlet.

2. Disconnect all external equipment connected to the computer.

CAUTION: To reduce the risk of personal injury from electrical shock, hot surfaces, or both, be sure to disconnect the power cord from the AC outlet, and allow the internal system components to cool before touching.

IMPORTANT: When the computer is plugged in, the power supply always has voltage applied to the system board even when the unit is turned off. Failure to disconnect the power cord can result in damage to the system.

Static electricity can damage the electronic components of the computer or optional equipment. Before beginning these procedures, ensure that you are discharged of static electricity by briefly touching a grounded metal object. See the *Safety & Regulatory Information* guide for more information.

3. Remove the access panel.

IMPORTANT: Pushing the CMOS button resets CMOS values to factory defaults. It is important to back up the computer CMOS settings before resetting them in case they are needed later. You back up by using Computer Setup. See Computer Setup (F10) Utility on page 68 for information on backing up the CMOS settings.

4. Remove the PCIe single-slot riser assembly.

5. Locate, press, and hold the CMOS button in for 5 seconds.

NOTE: Make sure you have disconnected the AC power cord from the AC outlet. The CMOS button will not clear CMOS if the power cord is connected.

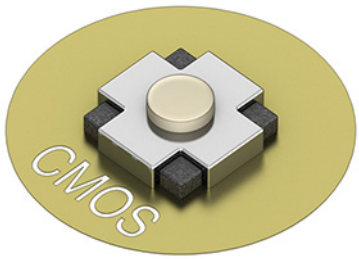

6. Replace the access panel.
7. Reconnect the external devices.
8. Plug in the computer and turn on power.

NOTE: You will receive POST error messages after clearing CMOS and rebooting advising you that configuration changes have occurred. Use Computer Setup to reset any special system setups along with the date and time.

For instructions on Computer Setup, see Computer Setup (F10) Utility on page 68.

9 POST error messages

This section lists the error codes, error messages, and the various indicator light and audible sequences that you may encounter during Power-On Self-Test (POST) or computer restart, the probable source of the problem, and steps you can take to resolve the error condition.

POST Message Disabled suppresses most system messages during POST, such as memory count and non-error text messages. If a POST error occurs, the screen will display the error message. To manually switch to the POST Messages Enabled mode during POST, press any key except f10, f11, or f12. The default mode is POST Message Disabled.

The POST mode selection determines the speed at which the computer loads the operating system and the extent to which it is tested.

Quick Boot is a fast startup process that does not run all of the system level tests, such as the memory test. Full Boot runs all of the ROM-based system tests and takes longer to complete.

You can enable Full Boot to run every 1 to 30 days on a regularly scheduled basis. To establish the schedule, reconfigure the computer to the Full Boot Every x Days mode, using Computer Setup.

NOTE: For more information about Computer Setup, see Computer Setup (F10) Utility on page 68.

POST numeric codes and text messages

This section identifies those POST errors that have numeric codes associated with them. The section also includes some text messages that you might encounter during POST.

NOTE: The computer beeps once after a POST text message is displayed on the screen.

Because of the amount of noise where these computers are installed, the internal speaker might be difficult to hear.

Table 9-1 POST numeric codes and text messages

Control panel message	Description	Recommended action
002-Option ROM Checksum Error	System ROM or expansion board option ROM checksum.	1. Verify the correct ROM. 2. Flash the ROM if needed. 3. If an expansion board was recently added, remove it to see if the problem remains. 4. Clear CMOS. 5. If the message disappears, there might be a problem with the expansion card. 6. Replace the system board.
003-System Board Failure	DMA or timers.	1. Clear CMOS. 2. Replace the system board.

Table 9-1 POST numeric codes and text messages (continued)

Control panel message	Description	Recommended action
005-Real-Time Clock Power Loss	Invalid time or date in configuration memory. RTC (real-time clock) battery might need to be replaced.	Reset the date and time under Control Panel (Computer Setup can also be used). If the problem persists, replace the RTC battery. See Battery on page 43.
008-Microcode Patch Error	Processor is not supported by the BIOS.	1. Upgrade BIOS to proper version. 2. Change the processor.
009-PMM Allocation Error during MEBx Download	Memory error during POST execution of the Management Engine (ME) BIOS Extensions option ROM.	1. Reboot the computer. 2. Unplug the power cord, reseat the memory modules, and reboot the computer. 3. If the memory configuration was recently changed, unplug the power cord, restore the original memory configuration, and reboot the computer. 4. If the error persists, replace the system board.
00A-Product Information Not Valid	The product information programmed into the system board is missing or invalid.	Use Computer Setup (F10) Utility on page 68 to update this information.
00B-MEBx Module did not checksum correctly	Memory error during POST execution of the Management Engine (ME) BIOS Extensions option ROM.	1. Reboot the computer. 2. Unplug the power cord, reseat the memory modules, and reboot the computer. 3. If the memory configuration was recently changed, unplug the power cord, restore the original memory configuration, and reboot the computer. 4. If the error persists, replace the system board.
00C-PMM Deallocation Error during MEBx Cleanup	Memory error during POST execution of the Management Engine (ME) BIOS Extensions option ROM.	1. Reboot the computer. 2. Unplug the power cord, reseat the memory modules, and reboot the computer. 3. If the memory configuration was recently changed, unplug the power cord, restore the original memory configuration, and reboot the computer. 4. If the error persists, replace the system board.

Table 9-1 POST numeric codes and text messages (continued)

Control panel message	Description	Recommended action
00D-Setup Error during MEBx Execution	MEBx selection or exit resulted in a setup failure.	1. Reboot the computer. 2. Unplug the power cord, reseat the memory modules, and reboot the computer. 3. If the memory configuration was recently changed, unplug the power cord, restore the original memory configuration, and reboot the computer. 4. If the error persists, replace the system board.
00E-Inventory Error during MEBx Execution	BIOS information passed to the MEBx resulted in a failure.	1. Reboot the computer. 2. If the error persists, update to the latest BIOS version. 3. If the error still persists, replace the system board.
00F-Interface Error during MEBx Execution	MEBx operation experienced a hardware error during communication with the ME.	1. Reboot the computer. 2. If the error persists, update to the latest BIOS version. 3. If the error still persists, replace the system board.
100-Front Audio Not Connected	Front audio cable has been detached or unseated from system board.	Reconnect or replace front audio cable.
2E1-MemorySize Error	Memory amount has changed since the last boot (memory added or removed).	The system memory size is different from the last startup. The most common reason is the removal of memory from the system board. Press the f1 key to save the memory changes.
2E2-Memory Error	Memory module configuration failed during startup.	1. Be sure that memory modules are correctly installed. 2. Verify proper memory module type. 3. Remove and replace the identified faulty memory modules. 4. If the error persists after replacing memory modules, replace the system board.
2E3-Incompatible Memory Module in Memory Socket(s) X, X, ...	A memory module in memory socket identified in the error message is missing critical SPD information, or is incompatible with the chipset.	1. Verify proper memory module type. 2. Try another memory socket. 3. Replace with a supported module.
2E4-DIMM Configuration Warning	Populated DIMM Configuration is not optimized.	Rearrange the DIMMs so that each channel has the same amount of memory.

Table 9-1 POST numeric codes and text messages (continued)

Control panel message	Description	Recommended action
2E5-ECC Memory Module Detected on Unsupported Platform	Recently added memory modules support ECC memory error correction.	1. If additional memory was recently added, remove it to see if the problem remains. 2. Check product documentation for memory support information.
2E6-Memory Not Configured Correctly for Proper MEBx Execution	DIMM1 is not installed.	Make sure there is a memory module in the DIMM1 socket and that it is properly seated.
300-Configuration Change Warning	A change in storage configuration has been detected (see the Boot Options menu in BIOS Setup to enable this feature). Either the installed hardware has changed, storage or firmware mode might have been changed, or a storage device might have failed to respond.	If no changes were made prior to this warning, check that the drives are connected properly to power cables and system board. User Diagnostics (f2 during boot-up) might help identify any problem with specific devices.
301-Hard Disk 1: SMART Hard Drive Detects Imminent Failure	Hard drive is about to fail. (Some hard drives have a hard drive firmware patch that will fix an erroneous error message.)	1. Determine if the hard drive is giving correct error message. Run the Drive Protection System test under using F2 Diagnostics when booting the computer. 2. Apply hard drive firmware patch if applicable. (Available at http://www.hp.com/support.) 3. Back up contents and replace hard drive.
311-Hard Disk 2: SMART Hard Drive Detects Imminent Failure	Hard drive is about to fail. (Some hard drives have a hard drive firmware patch that will fix an erroneous error message.)	1. Determine if hard drive is giving correct error message. Run the Drive Protection System test under using F2 Diagnostics when booting the computer. 2. Apply hard drive firmware patch if applicable. (Available at http://www.hp.com/support.) 3. Back up contents and replace hard drive.
3F0-Boot Device Not Found	Boot device not found.	Insert boot device or load operating system.
3F1-Hard Disk 1 Error	Hard disk 1 error.	1. Check and/or replace cables. 2. Clear CMOS. 3. Replace the hard disk drive.
3F2-Hard Disk 2 Error	Hard disk 2 error.	1. Check and/or replace cables. 2. Clear CMOS. 3. Replace the hard disk drive.

Table 9-1 POST numeric codes and text messages (continued)

Control panel message	Description	Recommended action
400-Serial Port A Address Conflict Detected	Both external and internal serial ports are assigned to the same resources.	1. Remove any serial port expansion cards. 2. Clear CMOS. 3. Reconfigure card resources and/or run Computer Setup or Windows utilities.
419-Out of Memory Space for Option ROMs	Recently added PCI expansion card contains an option ROM too large to download during POST.	If a PCI expansion card was recently added, remove it to see if the problem remains.
41A-Front USB1/USB2 Not Connected	Front USB cable has been detached or unseated from system board.	Reconnect or replace front USB cable.
41B-Device in PCI Express Slot Failed To Initialize	There is an incompatibility or problem with a PCIe device and the system or PCIe link could not be configured to a valid bus width or speed.	Try rebooting the system. If the error reoccurs, the device might not work with this system
43A-USB Type-C I2C Not Connected	Cable is required between I2C on card and USB-C on the system board.	Install cable between I2C on card and USB-C on the system board.
43B-More Than One USB type-C Cards Are Installed	More than one USB Type-C card is installed.	Remove USB Type-C card so only one is installed.
500–BIOS Recovery	A system BIOS recovery has occurred.	Not applicable.
800-Keyboard Error	Keyboard failure.	1. Reconnect keyboard with computer turned off. 2. Check connector for bent or missing pins. 3. Be sure that none of the keys are pressed. 4. Replace keyboard.
801-Keyboard or System Unit Error	Keyboard failure.	1. Reconnect the keyboard with computer turned off. 2. Be sure that none of the keys are pressed. 3. Replace the keyboard. 4. Replace the system board.
904-SATA Cabling Error	One or more SATA devices are improperly attached. For optimal performance, use the SATA 0 and SATA 1 ports for hard drives before other ports.	Ensure SATA connectors are used in ascending order. For one device, use SATA 0. For two devices, use SATA 0 and SATA 1. For three devices, use SATA 0, SATA 1, and SATA 2.
90B-Fan Failure	The system has detected that a cooling fan is not operating correctly.	1. Reseat fan. 2. Reseat fan cable. 3. Replace fan.

Table 9-1 POST numeric codes and text messages (continued)

Control panel message	Description	Recommended action
90D-System Temperature	Thermal shutdown occurred. The system BIOS has detected your machine was previously shut down to avoid overheating. Overheating could occur if the cooling vents are blocked or the operating temperature exceeds the system specifications. The machine should return to normal operation after the situation is resolved.	Make sure system has proper airflow.
Power supply configuration has changed	The number of operable power supplies in the system has changed since the last startup.	The error message is accompanied by the current status of each power supply bay. Be sure the power cable is connected and a known working supply is inserted into the bay indicating the failure. Also, check the indicator light on the front of each power supply and ensure a green light indicates successful operation.

Interpreting system validation diagnostic front panel LEDs and audible codes

This section identifies the front panel light codes as well as the audible codes that can occur before or during POST that might not have an error code or text message associated with them.

TIP: Because of the amount of noise where these computers are installed, the internal speaker might be difficult to hear. If this is the case, you can use the blink codes alone to help diagnose issues.

Beeps do not play through the headphone jack.

CAUTION: When the computer is plugged into an AC power source, voltage is always applied to the system board. To reduce the risk of personal injury from electrical shock and/or hot surfaces, be sure to disconnect the power cord from the AC outlet and allow the internal system components to cool before touching.

During the system validation phase that occurs at system startup, the BIOS validates the functionality of the following subsystems and conditions:

- AC adapter
- System board power
- Processor failure
- BIOS corruption
- Memory failure
- Graphics failure
- System board failure
- BIOS authentication failure

If an error is detected, specific patterns of long and short blinks, accompanied by long and short beeps (where applicable) are used to identify the error. These patterns make up a two-part code:

- Major: the category of the error
- Minor: the specific error within the category

NOTE: Single beep and blink codes are not used.

Table 9-2 Beep pattern error identification

Number of long beeps/blinks	Error category
1	Not used
2	BIOS
3	Hardware
4	Thermal
5	System board

Patterns of blink/beep codes are determined by using the following parameters:

- 1-second pause occurs after the last major blink.
- 2-second pause occurs after the last minor blink.
- Beep error code sequences occur for the first five iterations of the pattern and then stop.
- Blink error code sequences continue until the computer is unplugged or the power button is pressed.

NOTE: Not all diagnostic lights and audible codes are available on all models.

The red LED blinks to represent the major error category (long blinks). The white LED blinks to represent the minor error category (short blinks). For example, *3.5* indicates 3 long red blinks and 5 short white blinks to communicate the processor is not detected.

Table 9-3 Interpreting POST diagnostic front panel lights and audible codes

Category	Major/minor code	Description
BIOS	2.2	The main area (DXE) of BIOS has become corrupted and there is no recovery binary image available.
	2.3	The embedded controller policy requires the user to enter a key sequence.
	2.6	The embedded controller is checking or recovering the boot block.

Table 9-3 Interpreting POST diagnostic front panel lights and audible codes (continued)

Category	Major/minor code	Description
Hardware	3.2	The embedded controller has timed out waiting for BIOS to return from memory initialization.
	3.3	The embedded controller has timed out waiting for BIOS to return from graphics initialization.
	3.4	The system board displays a power failure (crowbar).*
	3.5	The processor is not detected.*
	3.6	The processor does not support an enabled feature.
	3.7	Top cover is loose or is not present.
Thermal	4.2	A processor over temperature condition has been detected.*
System board	5.2	The embedded controller cannot find valid firmware.
	5.3	The embedded controller has timed out waiting for the BIOS.
	5.4	The embedded controller has timed out waiting for BIOS to return from system board initialization.
	5.5	The embedded controller rebooted the system after a possible lockup condition had been detected through the use of a System Health Timer, Automated System Recovery Timer, or other mechanism.

* Indicates hardware triggered event; BIOS controls all other events.

Table 9-4 Power supply LED status indicator

Status	LED color
Power supply on and functioning	Solid green
No power	Off
Power supply standby state (power present)/only 11.5 VSB on (12 V main off)	Blinks green
Power cord unplugged or power loss	Off
Critical event caused a shutdown (power supply or system), including failure, over current, short circuit, over voltage, fan failure, or over temperature. NOTE: A red LED can mean either a power supply failure or a system failure (for example, an add-in card drawing too much power).	Red

Table 9-4 **Power supply LED status indicator (continued)**

Status	LED color
To troubleshoot a red or off power supply LED: **LED off**: Check the power source. Bad: Try a new power source and restart the computer. Good: Reattach the power cord and press the power button. If the computer does not start, replace the power supply. **LED red**: Caused by a system overload or a power supply failure. Push the power button to see if the computer starts. If the LED turns solid green and the computer boots to Windows, a system event likely caused the computer to shut down (over current, over power, over temperature). A single power supply might not support the configuration. • If the power supply immediately shuts down, remove all attached devices. If the computer starts, one of the attached devices is bad. • If the computer does not start, remove all other components not required in the computer (extra PCIe cards, USB devices, extra hard drives). If the computer starts, one of the components is bad. • If the computer does not start, swap out memory and graphics. If the computer starts, one of the components is bad. • If the computer does not start, replace the power supply. • If the computer does not start, then the processor or system board is the cause. Replace the system board.	

10 Backing up, restoring, and recovering

You can use Windows tools or HP software to back up your information, create a restore point, reset your computer, create recovery media, or restore your computer to its factory state. Performing these standard procedures can return your computer to a working state faster.

IMPORTANT: If you are performing recovery procedures on a tablet, the tablet battery must be at least 70% charged before you start the recovery process.

IMPORTANT: For a tablet with a detachable keyboard, connect the tablet to the keyboard base before beginning any recovery process.

Backing up information and creating recovery media

These methods of creating recovery media and backups are available on select products only.

Using Windows tools for backing up

HP recommends that you back up your information immediately after initial setup. You can do this task either using Windows Backup locally with an external USB drive or using online tools.

IMPORTANT: Windows is the only option that allows you to back up your personal information. Schedule regular backups to avoid information loss.

NOTE: If computer storage is 32 GB or less, Microsoft® System Restore is disabled by default.

Using the HP Cloud Recovery Download Tool to create recovery media (select products only)

You can use the HP Cloud Recovery Download Tool to create HP Recovery media on a bootable USB flash drive.

For details:

- Go to http://www.hp.com, search for HP Cloud Recovery, and then select the result that matches the type of computer that you have.

NOTE: If you cannot create recovery media yourself, contact support to obtain recovery discs. Go to http://www.hp.com/support, select your country or region, and then follow the on-screen instructions.

IMPORTANT: HP recommends that you follow the Restoring and recovery methods on page 98 to restore your computer before you obtain and use the HP recovery discs. Using a recent backup can return your machine to a working state sooner than using the HP recovery discs. After the system is restored, reinstalling all the operating system software released since your initial purchase can be a lengthy process.

Restoring and recovering your system

You have several tools available to recover your system both within and outside of Windows if the desktop cannot load.

HP recommends that you attempt to restore your system using the Restoring and recovery methods on page 98.

Creating a system restore

System Restore is available in Windows. The System Restore software can automatically or manually create restore points, or snapshots, of the system files and settings on the computer at a particular point.

When you use System Restore, it returns your computer to its state at the time you made the restore point. Your personal files and documents should not be affected.

Restoring and recovery methods

After you run the first method, test to see whether the issue still exists before you proceed to the next method, which might now be unnecessary.

1. Run a Microsoft System Restore.
2. Run Reset this PC.

   NOTE: The options **Remove everything** and then **Fully clean the drive** can take several hours to complete and leave no information on your computer. It is the safest way to reset your computer before you recycle it.

3. Recover using HP Recovery media. For more information, see Recovering using HP Recovery media on page 98.

For more information about the first two methods, see the Get Help app:

Select the **Start** button, select the **Get Help** app, and then enter the task you want to perform.

NOTE: You must be connected to the internet to access the Get Help app.

Recovering using HP Recovery media

You can use HP Recovery media to recover the original operating system and software programs that were installed at the factory. On select products, it can be created on a bootable USB flash drive using the HP Cloud Recovery Download Tool.

For details, see Using the HP Cloud Recovery Download Tool to create recovery media (select products only) on page 97.

NOTE: If you cannot create recovery media yourself, contact support to obtain recovery discs. Go to http://www.hp.com/support, select your country or region, and then follow the on-screen instructions.

To recover your system:

- Insert the HP Recovery media, and then restart the computer.

NOTE: HP recommends that you follow the Restoring and recovery methods on page 98 to restore your computer before you obtain and use the HP recovery discs. Using a recent backup can return your

machine to a working state sooner than using the HP recovery discs. After the system is restored, reinstalling all the operating system software released since your initial purchase can be a lengthy process.

Changing the computer boot order

If your computer does not restart using the HP Recovery media, you can change the computer boot order, which is the order of devices listed in BIOS for startup information. You can select an optical drive or a USB flash drive, depending on the location of your HP Recovery media.

IMPORTANT: For a tablet with a detachable keyboard, connect the tablet to the keyboard base before beginning these steps.

To change the boot order:

1. Insert the HP Recovery media.
2. Access the system **Startup** menu.
   - For computers or tablets with keyboards attached, turn on or restart the computer or tablet, quickly press esc, and then press f9 for boot options.
   - For tablets without keyboards, turn on or restart the tablet, quickly press and hold the volume up button, and then select **f9**.

     – or –

     Turn on or restart the tablet, quickly press and hold the volume down button, and then select **f9**.
3. Select the optical drive or USB flash drive from which you want to boot, and then follow the on-screen instructions.

Using HP Sure Recover (select products only)

Select computer models are configured with HP Sure Recover, a PC operating system (OS) recovery solution built into the hardware and software. HP Sure Recover can fully restore the HP OS image without installed recovery software.

Using HP Sure Recover, an administrator or user can restore the system and install:

- Latest version of the operating system
- Platform-specific device drivers
- Software applications, in the case of a custom image

To access the latest documentation for HP Sure Recover, go to http://www.hp.com/support. Follow the on-screen instructions to find your product and locate your documentation.

11 Using HP PC Hardware Diagnostics

You can use the HP PC Hardware Diagnostics utility to determine whether your computer hardware is running properly. The three versions are HP PC Hardware Diagnostics Windows, HP PC Hardware Diagnostics UEFI (Unified Extensible Firmware Interface), and (for select products only) Remote HP PC Hardware Diagnostics UEFI, a firmware feature.

Using HP PC Hardware Diagnostics Windows (select products only)

HP PC Hardware Diagnostics Windows is a Windows-based utility that allows you to run diagnostic tests to determine whether the computer hardware is functioning properly. The tool runs within the Windows operating system to diagnose hardware failures.

If HP PC Hardware Diagnostics Windows is not installed on your computer, you must download and install it. To download HP PC Hardware Diagnostics Windows, see Downloading HP PC Hardware Diagnostics Windows on page 101.

Using an HP PC Hardware Diagnostics Windows hardware failure ID code

When HP PC Hardware Diagnostics Windows detects a failure that requires hardware replacement, a 24-digit failure ID code is generated for select component tests. For interactive tests, such as keyboard, mouse, or audio and video palette, you must perform troubleshooting steps before you can receive a failure ID.

- You have several options after you receive a failure ID:
  - Select **Next** to open the Event Automation Service (EAS) page, where you can log the case.
  - Scan the QR code with your mobile device, which takes you to the EAS page, where you can log the case.
  - Select the box next to the 24-digit failure ID to copy your failure code and send it to support.

Accessing HP PC Hardware Diagnostics Windows

After HP PC Hardware Diagnostics Windows is installed, you can access it from HP Support Assistant or the Start menu.

Accessing HP PC Hardware Diagnostics Windows from HP Help and Support (select products only)

After HP PC Hardware Diagnostics Windows is installed, follow these steps to access it from HP Help and Support.

1. Select the **Start** button, and then select **HP Help and Support**.
2. Select **HP PC Hardware Diagnostics Windows**.
3. When the tool opens, select the type of diagnostic test that you want to run, and then follow the on-screen instructions.

NOTE: To stop a diagnostic test, select **Cancel**.

Accessing HP PC Hardware Diagnostics Windows from HP Support Assistant

After HP PC Hardware Diagnostics Windows is installed, follow these steps to access it from HP Support Assistant.

1. Select the **Search** icon in the taskbar, type `support` in the search box, and then select **HP Support Assistant**.

   – or –

   Select the question mark icon (select products only) in the taskbar.

2. Select **Fixes & Diagnostics**.
3. Select **Run Hardware diagnostics**, and then select **Launch**.
4. When the tool opens, select the type of diagnostic test that you want to run, and then follow the on-screen instructions.

NOTE: To stop a diagnostic test, select **Cancel**.

Accessing HP PC Hardware Diagnostics Windows from the Start menu (select products only)

After HP PC Hardware Diagnostics Windows is installed, follow these steps to access it from the Start menu.

1. Select the **Start** button, and then select **All apps**.
2. Select **HP PC Hardware Diagnostics Windows**.
3. When the tool opens, select the type of diagnostic test that you want to run, and then follow the on-screen instructions.

NOTE: To stop a diagnostic test, select **Cancel**.

Downloading HP PC Hardware Diagnostics Windows

The HP PC Hardware Diagnostics Windows downloading instructions are provided in English only. You must use a Windows computer to download this tool because only .exe files are provided.

Downloading the latest HP PC Hardware Diagnostics Windows version from HP

To download HP PC Hardware Diagnostics Windows from HP, follow these steps:

1. Go to http://www.hp.com/go/techcenter/pcdiags. The HP PC Diagnostics home page is displayed.
2. Select **Download HP Diagnostics Windows**, and then select the specific Windows diagnostics version to download to your computer or a USB flash drive.

The tool downloads to the selected location.

Downloading the HP PC Hardware Diagnostics Windows from the Microsoft Store

You can download the HP PC Hardware Diagnostics Windows from the Microsoft Store.

1. Select the Microsoft Store app on your desktop.

   – or –

   Select the **Search** icon in the taskbar, and then type `Microsoft Store` in the search box.

2. Enter `HP PC Hardware Diagnostics Windows` in the **Microsoft Store** search box.

3. Follow the on-screen directions.

The tool downloads to the selected location.

Downloading HP Hardware Diagnostics Windows by product name or number (select products only)

You can download HP PC Hardware Diagnostics Windows by product name or number.

NOTE: For some products, you might have to download the software to a USB flash drive by using the product name or number.

1. Go to http://www.hp.com/support.

2. Select **Software and Drivers**, select your type of product, and then enter the product name or number in the search box that is displayed.

3. In the **Diagnostics** section, select **Download**, and then follow the on-screen instructions to select the specific Windows diagnostics version to be downloaded to your computer or USB flash drive.

The tool downloads to the selected location.

Installing HP PC Hardware Diagnostics Windows

To install HP PC Hardware Diagnostics Windows, navigate to the folder on your computer or the USB flash drive where the .exe file downloaded, double-click the .exe file, and then follow the on-screen instructions.

Using HP PC Hardware Diagnostics UEFI

HP PC Hardware Diagnostics Unified Extensible Firmware Interface (UEFI) allows you to run diagnostic tests to determine whether the computer hardware is functioning properly. The tool runs outside the operating system so that it can isolate hardware failures from issues that are caused by the operating system or other software components.

NOTE: For some products, you must use a Windows computer and a USB flash drive to download and create the HP UEFI support environment because only .exe files are provided. For more information, see Downloading HP PC Hardware Diagnostics UEFI to a USB flash drive on page 103.

If your PC does not start in Windows, you can use HP PC Hardware Diagnostics UEFI to diagnose hardware issues.

Using an HP PC Hardware Diagnostics UEFI hardware failure ID code

When HP PC Hardware Diagnostics UEFI detects a failure that requires hardware replacement, a 24-digit failure ID code is generated.

For assistance in solving the problem, complete one of these tasks:

- Select **Contact HP**, accept the HP privacy disclaimer, and then use a mobile device to scan the failure ID code that appears on the next screen. The HP Customer Support - Service Center page appears with your failure ID and product number automatically filled in. Follow the on-screen instructions.
- Contact support, and provide the failure ID code.

Starting HP PC Hardware Diagnostics UEFI

To start HP PC Hardware Diagnostics UEFI, follow this procedure.

1. Turn on or restart the computer, and quickly press esc.
2. Press f2.

   The BIOS searches three places for the diagnostic tools, in the following order:

   a. Connected USB flash drive

   NOTE: To download the HP PC Hardware Diagnostics UEFI tool to a USB flash drive, see Downloading the latest HP PC Hardware Diagnostics UEFI version on page 103.

   b. Hard drive

   c. BIOS
3. When the diagnostic tool opens, select the type of diagnostic test that you want to run, and then follow the on-screen instructions.

Downloading HP PC Hardware Diagnostics UEFI to a USB flash drive

Downloading HP PC Hardware Diagnostics UEFI to a USB flash drive can be useful in some situations.

- HP PC Hardware Diagnostics UEFI is not included in the preinstallation image.
- HP PC Hardware Diagnostics UEFI is not included in the HP Tool partition.
- The hard drive is damaged.

NOTE: The HP PC Hardware Diagnostics UEFI downloading instructions are provided in English only, and you must use a Windows computer to download and create the HP UEFI support environment because only .exe files are provided.

Downloading the latest HP PC Hardware Diagnostics UEFI version

To download the latest HP PC Hardware Diagnostics UEFI version to a USB flash drive, follow this procedure:

1. Go to http://www.hp.com/go/techcenter/pcdiags. The HP PC Diagnostics home page is displayed.
2. Select **Download HP Diagnostics UEFI**, and then select **Run**.

Downloading HP PC Hardware Diagnostics UEFI by product name or number (select products only)

You can download HP PC Hardware Diagnostics UEFI by product name or number (select products only) to a USB flash drive.

NOTE: For some products, you might have to download the software to a USB flash drive by using the product name or number.

1. Go to http://www.hp.com/support.
2. Enter the product name or number, select your computer, and then select your operating system.
3. In the **Diagnostics** section, follow the on-screen instructions to select and download the specific UEFI Diagnostics version for your computer.

Using Remote HP PC Hardware Diagnostics UEFI settings (select products only)

Remote HP PC Hardware Diagnostics UEFI is a firmware (BIOS) feature that downloads HP PC Hardware Diagnostics UEFI to your computer. It can then run the diagnostics on your computer, and it might upload results to a preconfigured server.

For more information about Remote HP PC Hardware Diagnostics UEFI, go to http://www.hp.com/go/techcenter/pcdiags, and then select **Find out more**.

Downloading Remote HP PC Hardware Diagnostics UEFI

Remote HP PC Hardware Diagnostics UEFI is also available as a SoftPaq that you can download to a server.

Downloading the latest Remote HP PC Hardware Diagnostics UEFI version

You can download the latest Remote HP PC Hardware Diagnostics UEFI version to a USB flash drive.

1. Go to http://www.hp.com/go/techcenter/pcdiags. The HP PC Diagnostics home page is displayed.
2. Select **Download Remote Diagnostics**, and then select **Run**.

Downloading Remote HP PC Hardware Diagnostics UEFI by product name or number

You can download Remote HP PC Hardware Diagnostics UEFI by product name or number.

NOTE: For some products, you might have to download the software by using the product name or number.

1. Go to http://www.hp.com/support.
2. Select **Software and Drivers**, select your type of product, enter the product name or number in the search box that is displayed, select your computer, and then select your operating system.
3. In the **Diagnostics** section, follow the on-screen instructions to select and download the **Remote UEFI** version for the product.

Customizing Remote HP PC Hardware Diagnostics UEFI settings

Using the Remote HP PC Hardware Diagnostics setting in Computer Setup (BIOS), you can perform several customizations.

- Set a schedule for running diagnostics unattended. You can also start diagnostics immediately in interactive mode by selecting **Execute Remote HP PC Hardware Diagnostics UEFI**.

- Set the location for downloading the diagnostic tools. This feature provides access to the tools from the HP website or from a server that has been preconfigured for use. Your computer does not require the traditional local storage, such as a hard drive or USB flash drive, to run remote diagnostics.
- Set a location for storing the test results. You can also set the user name and password that you use for uploads.
- Display status information about the diagnostics run previously.

To customize Remote HP PC Hardware Diagnostics UEFI settings, follow these steps:

1. Turn on or restart the computer, and when the HP logo appears, press f10 to enter Computer Setup.
2. Select **Advanced**, and then select **Settings**.
3. Make your customization selections.
4. Select **Main**, then select **Save Changes and Exit** to save your settings.

Your changes take effect when the computer restarts.

12 Statement of memory volatility

For general information regarding nonvolatile memory in HP business computers, and to restore nonvolatile memory that can contain personal data after the system has been turned off and the hard drive has been removed, use these instructions.

HP business computer products that use Intel®-based or AMD®-based system boards contain volatile DDR memory. The amount of nonvolatile memory present in the system depends upon the system configuration. Intel-based and AMD-based system boards contain nonvolatile memory subcomponents as originally shipped from HP, with the following assumptions:

- No subsequent modifications were made to the system.
- No applications, features, or functionality were added to or installed on the system.

Following system shutdown and removal of all power sources from an HP business computer system, personal data can remain on volatile system memory (DIMMs) for a finite period of time and also remains in nonvolatile memory. Use the following steps to remove personal data from the computer, including the nonvolatile memory found in Intel-based and AMD-based system boards.

NOTE: If your tablet has a keyboard base, connect to the keyboard base before beginning steps in this chapter.

Current BIOS steps

Use these instructions to restore nonvolatile memory.

1. Follow these steps to restore the nonvolatile memory that can contain personal data. Restoring or reprogramming nonvolatile memory that does not store personal data is neither necessary nor recommended.

   a. Turn on or restart the computer, and then quickly press esc.

   NOTE: If the system has a BIOS administrator password, type the password at the prompt.

   b. Select **Main**, select **Apply Factory Defaults and Exit**, and then select **Yes** to load defaults. The computer restarts.

   c. During the restart, press esc while the "Press the ESC key for Startup Menu" message is displayed at the bottom of the screen.

   NOTE: If the system has a BIOS administrator password, type the password at the prompt.

   d. Select the **Security** menu, select **Restore Security Settings to Factory Defaults**, and then select **Yes** to restore security level defaults. The computer restarts.

   e. During the restart, press esc while the "Press the ESC key for Startup Menu" message is displayed at the bottom of the screen.

   NOTE: If the system has a BIOS administrator password, type the password at the prompt.

f. If an asset or ownership tag is set, select the **Security** menu and scroll down to the **Utilities** menu. Select **System IDs**, and then select **Asset Tracking Number**. Clear the tag, and then make the selection to return to the prior menu.

g. If a DriveLock password is set, select the **Security** menu, and scroll down to **Hard Drive Utilities** under the **Utilities** menu. Select **Hard Drive Utilities**, select **DriveLock**, and then clear the check box for **DriveLock password on restart**. Select **OK** to proceed.

h. Select the **Main** menu, and then select **Reset BIOS Security to factory default**. Select **Yes** at the warning message. The computer restarts.

i. During the restart, press esc while the "Press the ESC key for Startup Menu" message is displayed at the bottom of the screen.

NOTE: If the system has a BIOS administrator password, type the password at the prompt.

j. Select the **Main** menu, select **Apply Factory Defaults and Exit**, select **Yes** to save changes and exit, and then select **Shutdown**.

k. Restart the system. If the system has a Trusted Platform Module (TPM), fingerprint reader, or both, one or two prompts will appear—one to clear the TPM and the other to Reset Fingerprint Sensor. Press or tap f1 to accept or f2 to reject.

l. Remove all power and system batteries for at least 24 hours.

2. Complete one of the following:

- Remove and retain the storage drive.

  – or –

- Clear the drive contents by using a third-party utility designed to erase data from an SSD.

  – or –

- Clear the contents of the drive by using the following BIOS Setup Secure Erase command option steps:

NOTE: If you clear data using Secure Erase, you cannot recover it.

a. Turn on or restart the computer, and then quickly press esc.

b. Select the **Security** menu and scroll down to the esc menu.

c. Select **Hard Drive Utilities**.

d. Under **Utilities**, select **Secure Erase**, select the hard drive storing the data you want to clear, and then follow the on-screen instructions to continue.

   – or –

   Clear the contents of the drive using the following Disk Sanitizer commands steps:

   i. Turn on or restart the computer, and then quickly press esc.

   ii. Select the **Security** menu and scroll down to the **Utilities** menu.

   iii. Select **Hard Drive Utilities**.

iv. Under **Utilities**, select **Disk Sanitizer**, select the hard drive with the data that you want to clear, and then follow the on-screen instructions to continue.

NOTE: The amount of time it takes for Disk Sanitizer to run can take several hours. Plug the computer into an AC outlet before starting.

Nonvolatile memory usage

Use this table to troubleshoot nonvolatile memory usage.

Table 12-1 Troubleshooting steps for nonvolatile memory usage

Nonvolatile memory type	Amount (Size)	Does this memory store customer data?	Does this memory retain data when power is removed?	What is the purpose of this memory?	How is data entered into this memory?	How is this memory write-protected?
HP Sure Start flash (select models only)	16 MB	No	Yes	Provides protected backup of critical System BIOS code, EC firmware, and critical computer configuration data for select platforms that support HP Sure Start. For more information, see Using HP Sure Start (select products only) on page 112.	Data cannot be written to this device via the host processor. The content is managed solely by the HP Sure Start Embedded Controller.	This memory is protected by the HP Sure Start Embedded Controller.
Real Time Clock (RTC) battery backed-up CMOS configuration memory	256 bytes	No	Yes	Stores system date and time and noncritical data.	RTC battery backed-up CMOS is programmed using Computer Setup (BIOS), or by changing the Windows date & time.	This memory is not write-protected.
Controller (NIC) EEPROM	64 KB (not customer accessible)	No	Yes	Stores NIC configuration and NIC firmware.	NIC EEPROM is programmed using a utility from the NIC vendor that can be run from DOS.	A utility must be used to write data to this memory and is available from the NIC vendor. Writing data to this ROM in an inappropriate manner renders the NIC non-functional.

Table 12-1 Troubleshooting steps for nonvolatile memory usage (continued)

Nonvolatile memory type	Amount (Size)	Does this memory store customer data?	Does this memory retain data when power is removed?	What is the purpose of this memory?	How is data entered into this memory?	How is this memory write-protected?
DIMM Serial Presence Detect (SPD) configuration data	256 bytes per memory module, 128 bytes programmable (not customer accessible)	No	Yes	Stores memory module information.	DIMM SPD is programmed by the memory vendor.	Data cannot be written to this memory when the module is installed in a computer. The specific write-protection method varies by memory vendor.
System BIOS	32 MB	Yes	Yes	Stores system BIOS code and computer configuration data.	System BIOS code is programmed at the factory. Code is updated when the system BIOS is updated. Configuration data and settings are entered using the Computer Setup (BIOS) or a custom utility.	NOTE: Writing data to this ROM in an inappropriate manner can render the computer non-functional. A utility must be used for writing data to this memory and is available on the HP website; go to http://www.hp.com/support. Select **Find your product**, and then follow the on-screen instructions.
Intel Management Engine Firmware (present only in select Elite or Z models. For more information, go to http://www.hp.com/support. Select **Identify your product for manuals and specific product information**, and then follow the on-screen instructions.)	1.5 MB or 7 MB	Yes	Yes	Stores Management Engine Code, Settings, Provisioning Data and iAMT third-party data store.	Management Engine Code is programmed at the factory. Code is updated via Intel secure firmware update utility. Unique Provisioning Data can be entered at the factory or by an administrator using the Management Engine (MEBx) setup utility. The third-party data store contents can be populated by a remote management console or local applications that have been registered by an administrator to have access to the space.	The Intel chipset is configured to enforce hardware protection to block all direct read-write access to this area. An Intel utility must be used for updating the firmware. Only firmware updates digitally signed by Intel can be applied using this utility.
Bluetooth flash (select products only)	2 megabits	No	Yes	Stores Bluetooth configuration and firmware.	Bluetooth flash is programmed at the factory. Tools for writing data to this memory are not publicly available but can be obtained from the silicon vendor.	A utility must be used for writing data to this memory and is made available through newer versions of the driver whenever the flash requires an upgrade.

Table 12-1 Troubleshooting steps for nonvolatile memory usage (continued)

Nonvolatile memory type	Amount (Size)	Does this memory store customer data?	Does this memory retain data when power is removed?	What is the purpose of this memory?	How is data entered into this memory?	How is this memory write-protected?
802.11 WLAN EEPROM	4 kilobits to 8 kilobits	No	Yes	Stores configuration and calibration data.	802.11 WLAN EEPROM is programmed at the factory. Tools for writing data to this memory are not made public.	A utility must be used for writing data to this memory and is typically not made available to the public unless a firmware upgrade is necessary to address a unique issue.
Camera (select products only)	64 kilobits	No	Yes	Stores camera configuration and firmware.	Camera memory is programmed using a utility from the device manufacturer that can be run from Windows.	A utility must be used for writing data to this memory and is typically not made available to the public unless a firmware upgrade is necessary to address a unique issue.
Fingerprint reader (select products only)	512 KB flash	Yes	Yes	Stores fingerprint templates.	Fingerprint reader memory is programmed by user enrollment in HP ProtectTools Security Manager.	Only a digitally signed application can make the call to write to the flash.

Questions and answers

Use this section to answer your questions about nonvolatile memory.

1. **How can the BIOS settings be restored (returned to factory settings)?**

IMPORTANT: The restore defaults feature does not securely erase any information on your hard drive. See question and answer 6 for steps to securely erase information.

The restore defaults feature does not reset the Custom Secure Boot keys. See question and answer 7 for information about resetting the keys.

a. Turn on or restart the computer, and then quickly press esc.

b. Select **Main**, and then select **Apply Factory Defaults and Exit**.

c. Follow the on-screen instructions.

d. Select **Main**, select **Save Changes and Exit**, and then follow the on-screen instructions.

2. **What is a UEFI BIOS, and how is it different from a legacy BIOS?**

The Unified Extensible Firmware Interface (UEFI) BIOS is an industry-standard software interface between the platform firmware and an operating system (OS). It replaces the older BIOS architecture but supports much of the legacy BIOS functionality.

Like the legacy BIOS, the UEFI BIOS provides an interface to display the system information and configuration settings and to change the configuration of your computer before an OS is loaded. BIOS provides a secure runtime environment that supports a Graphic User Interface (GUI). In this environment, you can use either a pointing device (touch screen, touchpad, pointing stick, or USB mouse) or the keyboard to navigate and make menu and configuration selections. The UEFI BIOS also contains basic system diagnostics.

The UEFI BIOS provides functionality beyond that of the legacy BIOS. In addition, the UEFI BIOS works to initialize the computer's hardware before loading and executing the OS; the runtime environment allows the loading and execution of software programs from storage devices to provide more functionality, such as advanced hardware diagnostics (with the ability to display more detailed system information) and advanced firmware management and recovery software.

HP has provided options in Computer Setup (BIOS) to allow you to run in legacy BIOS, if required by the operating system. Examples of this requirement would be if you upgrade or downgrade the OS.

3. **Where is the UEFI BIOS located?**

   The UEFI BIOS is located on a flash memory chip. You must use a utility to write to the chip.

4. **What kind of configuration data is stored on the DIMM Serial Presence Detect (SPD) memory module? How would this data be written?**

   The DIMM SPD memory contains information about the memory module, such as size, serial number, data width, speed and timing, voltage, and thermal information. This information is written by the module manufacturer and stored on an EEPROM. You cannot write to this EEPROM when the memory module is installed in a computer. Third-party tools do exist that can write to the EEPROM when the memory module is not installed in a computer. Various third-party tools are available to read SPD memory.

5. **What is meant by "Restore the nonvolatile memory found in Intel-based system boards"?**

   This message relates to clearing the Real Time Clock (RTC) CMOS memory that contains computer configuration data.

6. **How can the BIOS security be reset to factory defaults and erase the data?**

IMPORTANT: Resetting results in the loss of information.

These steps do not reset Custom Secure Boot Keys. See question and answer 7 for information about resetting the keys.

   a. Turn on or restart the computer, and then quickly press esc.

   b. Select **Main**, and then select **Reset Security to Factory Defaults**.

   c. Follow the on-screen instructions.

   d. Select **Main**, select **Save Changes and Exit**, and then follow the on-screen instructions.

7. **How can the Custom Secure Boot Keys be reset?**

   Secure Boot is a feature to ensure that only authenticated code can start on a platform. If you enabled Secure Boot and created Custom Secure Boot Keys, disabling Secure Boot does not clear the keys. You must also select to clear the Custom Secure Boot Keys. Use the same Secure Boot access procedure that you used to create the Custom Secure Boot Keys, but select to clear or delete all Secure Boot Keys.

   a. Turn on or restart the computer, and then quickly press esc.

b. Select the **Security** menu, select **Secure Boot Configuration**, and then follow the on-screen instructions.

c. At the **Secure Boot Configuration** window, select **Secure Boot**, select **Clear Secure Boot Keys**, and then follow the on-screen instructions to continue.

Using HP Sure Start (select products only)

Select computer models are configured with HP Sure Start, a technology that continuously monitors your computer's BIOS for attacks or corruption.

If the BIOS becomes corrupted or is attacked, HP Sure Start restores the BIOS to its previously safe state, without user intervention. Those select computer models ship with HP Sure Start configured and enabled. HP Sure Start is configured and already enabled so that most users can use the HP Sure Start default configuration. Advanced users can customize the default configuration.

To access the latest documentation on HP Sure Start, go to http://www.hp.com/support.

13 Specifications

This section provides specifications for your computer.

Table 13-1 **Specifications**

	Metric	U.S.
Dimensions		
Height	42.8 mm	1.69 in
Width	438.2 mm	17.25 in
Depth (without bezel)	655.5 mm	25.8 in
Depth (with bezel)	676.2 mm	26.62 in
Approximate weight		
Minimum	9.52 kg	21.6 lb
Standard	11.7 kg	25.8 lb
Maximum	12.1 kg	26.7 lb
Temperature range		
Operating	5°C to 40°C	35°F to 104°F
Nonoperating	-35°C to 60°C	-35°F to 140°F
NOTE: Above 1,524 m (5,000 feet) altitude, the maximum operating temperature is reduced by 1°C (1.8°F) for every 305 m (1,000 feet) increase in elevation. Maximum rate of change: 10°C/hr and no direct sustained sunlight.		
Maximum altitude (unpressurized)		
Operating (with rotational hard drives)	3,048 m	10,000 ft
Operating (with only solid-state drives)	5,000 m	16,404 ft
Nonoperating	12,192 m	40,000 ft
NOTE: Maximum operating temperature is reduced as altitude increases. See **Temperature range** for details.		
Relative humidity (noncondensing)		
Operating	8% to 85%, 35°C maximum wet bulb	
Nonoperating (38.7°C max wet bulb)	8% to 90%, 35°C maximum wet bulb	
Power supply (standard efficiency)	675 W and 87/90/87% at 20/50/100% loading at 115 V 675 W and 90/92/89% at 20/50/100% loading at 230 V	

Index

Symbols/Numerics

3.5 inch hard drive
  removal 27
3.5 inch hard drive carrier
  illustrated 6

A

access panel
  illustrated 6
  locked 55
  removal and replacement 26
Advanced menu, Computer Setup 77
audible codes 54, 93
audio-out (headphone)/audio-in (microphone) combo jack, identifying 2, 3

B

backup, creating 97
backups 97
battery
  disposal 11, 17, 18
battery replacement 43
beep codes 93
blinking lights 93
boot order, changing 99
booting options
  Full Boot 88
  Quick Boot 88

C

cable management 11, 19
cable pinouts, SATA data 19
cable support brackets
  removal and replacement 49
changing a Power-On password 85
changing a Setup password 85
cleaning
  computer 11, 14, 16
  mouse 11, 14, 17
  safety precautions 11, 14
cleaning your computer
  disinfecting 15
  removing dirt and debris 15
CMOS
  backing up 86
  clearing and resetting 85, 86
components
  bottom 5
  front 2
  rear 3
  top cover 4
computer cleaning 11, 14, 16
computer features 2
Computer Setup
  access problem 55
  Advanced menu 77
  Main menu 69
  Security menu 73
Computer Setup Utility 68
connectors
  power 4
Customer Support 53

D

deleting a Power-On password 85
deleting a Setup password 85
diagnostic LEDs 54
drive filler panel
  removal and replacement 26
dual 2.5 inch hard drive carrier
  illustrated 6

E

electrostatic discharge (ESD) 11
  preventing damage 11, 12
error
  codes 88, 93
error messages 88

F

F10 Setup 68
  access problem 55
fan
  illustrated 6
fans
  removal and replacement 49
flash drive problems 65
front bezel
  removal and replacement 24
front I/O assembly
  removal and replacement 32
front I/O assembly with speaker
  illustrated 6

G

general problems 55
grounding methods 11, 12

H

handle with thumbscrew
  illustrated 6
  removal and replacement 23
hard drive
  proper handling 11, 17, 18
  SATA characteristics 19
hard drive activity light, identifying 2, 3
hard drive connectors
  removal 50
hard drive connectors and cables
  illustrated 6
hard drive problems 58
hard drives 8
hardware installation
  problems 60
heat sink
  illustrated 6
  removal and replacement 36
helpful hints 54
HP PC Hardware Diagnostics UEFI
  downloading 103
  failure ID code 102
  starting 103
  using 102
HP PC Hardware Diagnostics Windows
  accessing 100, 101
  downloading 101
  failure ID code 100
  installing 102
  using 100
HP Recovery media recovery 98
HP Sure Recover 99
HP Sure Start 106, 112

I

illustrated parts catalog 6
installing
  battery 43
  memory 34
interlock switch
  removal and replacement 31
internet access problems 66

J

jack
  RJ-45 (network) 4
jacks
  audio-out (headphone)/audio-in (microphone) 2, 3
  network 4

K

keyboard
  cleaning 11, 14, 16

L

lights
  blinking PS/2 keyboard 93

M

M.2 module
  removal 29
Main menu, Computer Setup 69
mass storage devices 8
memory
  installation 34
  nonvolatile 106
  problems 64
  socket population 34
  volatile 106
memory module
  illustrated 6
miscellaneous parts 8
mouse
  cleaning 11, 14, 17

N

network jack, identifying 4
network problems 62
nonvolatile memory 106
numeric error codes 88

O

operating guidelines 11, 14
overheating, prevention 11, 14

P

password
  Power-On 85
  security 85
  Setup 85
PCIe dual slot riser bracket
  illustrated 6
PCIe dual slot riser option card
  illustrated 6
PCIe dual-slot riser assembly
  removal and replacement 38
PCIe single slot riser bracket
  illustrated 6
PCIe single-slot riser assembly
  removal and replacement 40
plastic frame
  illustrated 6
  removal and replacement 33
ports
  USB 4
  USB 10 Gbps port 3
  USB 5 Gbps port 3
  USB 5 Gbps port with HP Sleep and Charge 2, 3
POST error messages 88
power button, identifying 2-4
power connector
  identifying 4
power problems 57
power rating label 5
power supply
  illustrated 6
  operating voltage range 113
  removal and replacement 25
power supply filler panel
  illustrated 6
  removal and replacement 31
power supply light, identifying 2, 3
power supply release button, identifying 2, 3
Power-On password 85
problems
  Computer Setup 55
  F10 Setup 55
  flash drive 65
  general 55
  hard drive 58
  hardware installation 60
  internet access 66
  memory 64
  network 62
  power 57
  software 67
processor
  illustrated 6
  removal and replacement 37
product ID location 4

R

rack pull screw, identifying 2-4
rails
  removal and replacement 22
recovery 97, 98
  discs 98
  media 98
  USB flash drive 98
recovery media 97
  creating using HP Cloud Recovery Download Tool 97
  creating using Windows tools 97
Remote HP PC Hardware Diagnostics UEFI settings
  customizing 104
  using 104
removal and replacement
  cable support brackets 49
  drive filler panel 26
  fans 49
  front bezel 24, 26
  front I/O assembly 32
  handle with thumbscrew 23
  heat sink 36
  interlock switch 31
  PCIe dual-slot riser assembly 38
  PCIe single-slot riser assembly 40
  plastic frame 33
  power supply 25
  power supply filler panel 31
  processor 37
  rails 22
  solid-state drive 44
  system board 45
removing
  3.5 inch hard drive 27
  battery 43
  computer from rack 21
  hard drive connectors 50
  M.2 module 29
removing personal data from volatile system memory 106
resetting
  CMOS 86
restoring 97

restoring and recovery
methods 98
RJ-45 (network) jack, identifying 4

S

safety precautions
cleaning 11, 14
SATA
connectors on system board 19
data cable pinouts 19
hard drive characteristics 19
screws, correct size 11, 17, 18
Security menu, Computer Setup 73
serial number location 4
service considerations 11, 17
Setup password 85
single 2.5 inch hard drive carrier
illustrated 6
slots
memory card reader 2, 3
microSD memory card reader 2, 3
software
problems 67
servicing computer 11, 17
solid-state drive module
removal and replacement 44
solid-state drives 8
specifications
computer 113
specifications, product 5
static electricity 11
system board
illustrated 6
removal and replacement 45
SATA connectors 19
system board components 47
system memory, removing
personal data from volatile 106
system restore 98
system restore point, creating 97

T

temperature control 11, 14
tools, servicing 11, 17
top cover release latch, identifying 4
Torx T15 screwdriver 11, 17
Torx T30 screwdriver 17
troubleshooting without diagnostics 53

U

USB 10 Gbps port, identifying 3
USB 5 Gbps port with HP Sleep and Charge, identifying 2, 3
USB 5 Gbps port, identifying 3
USB port, identifying 4
using Computer Setup Utilities 68

V

ventilation, proper 11, 14

W

Windows
backup 97
recovery media 97
system restore point 97
Windows tools, using 97