BENQ GW3290QT
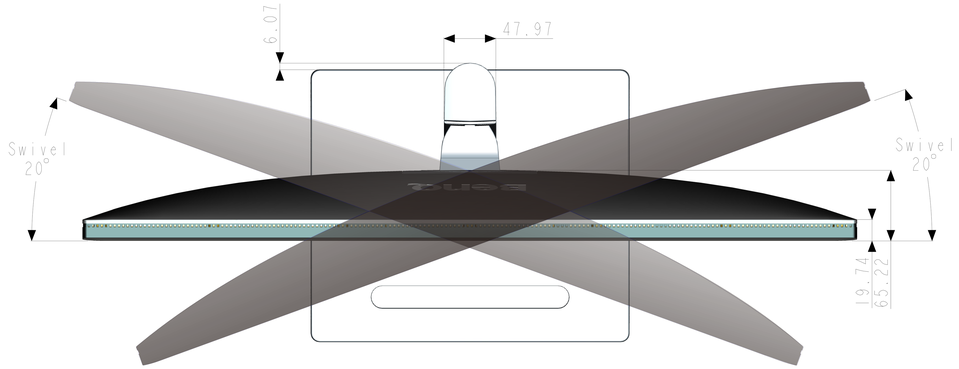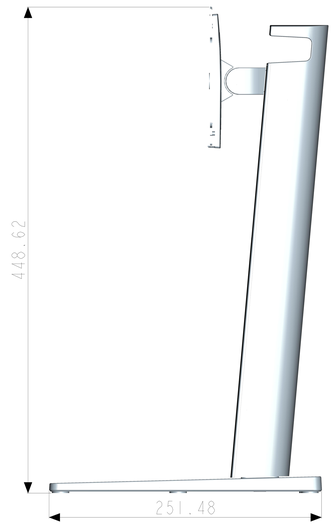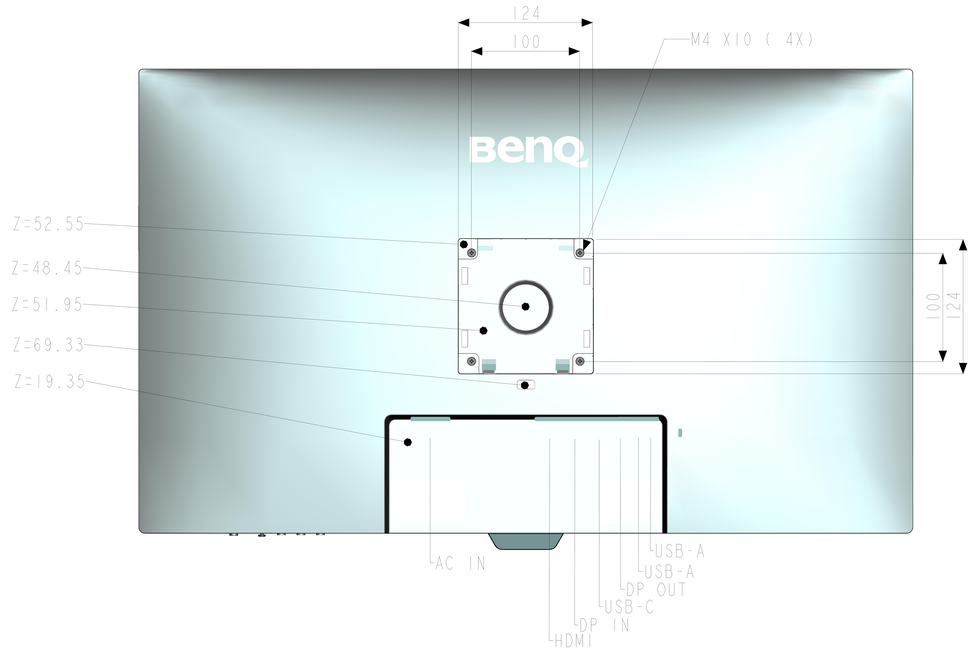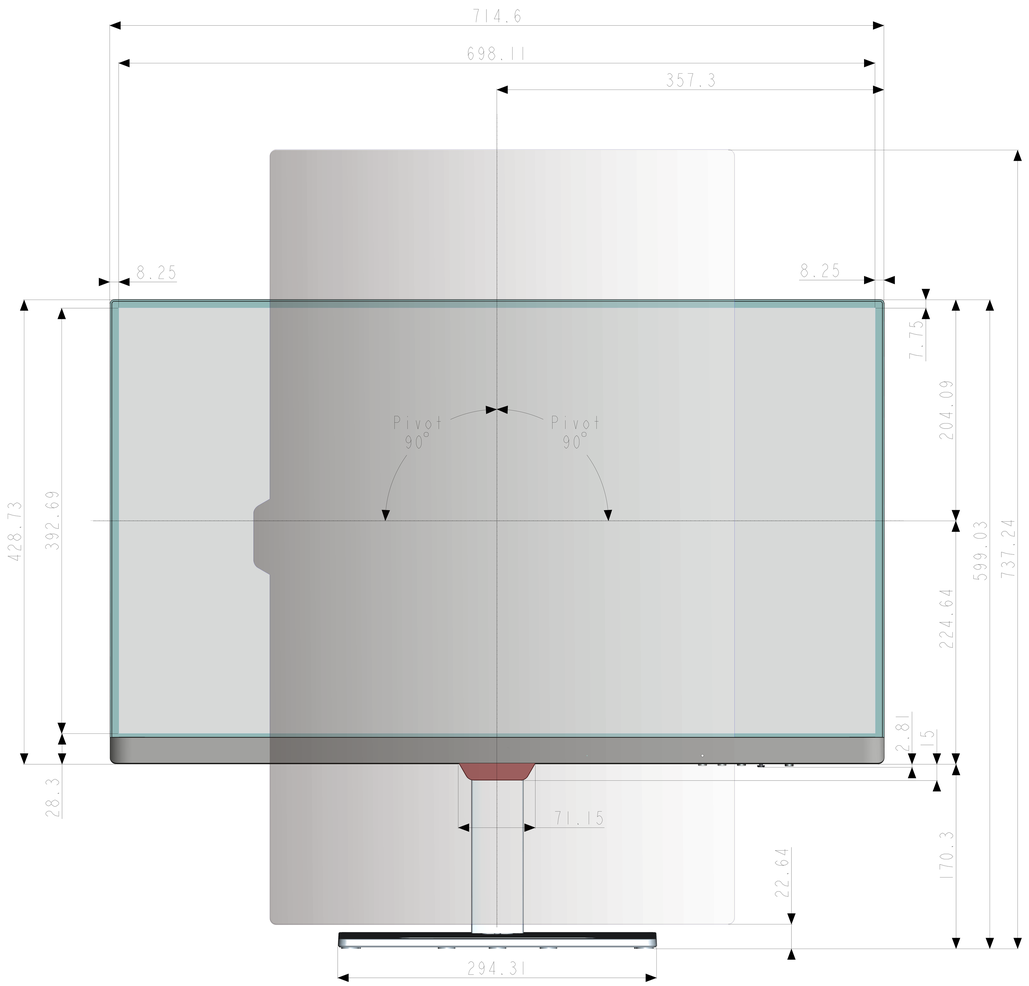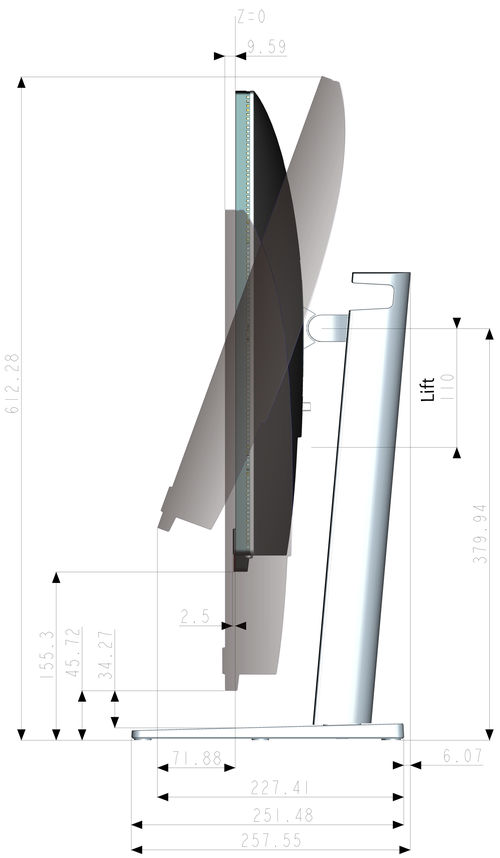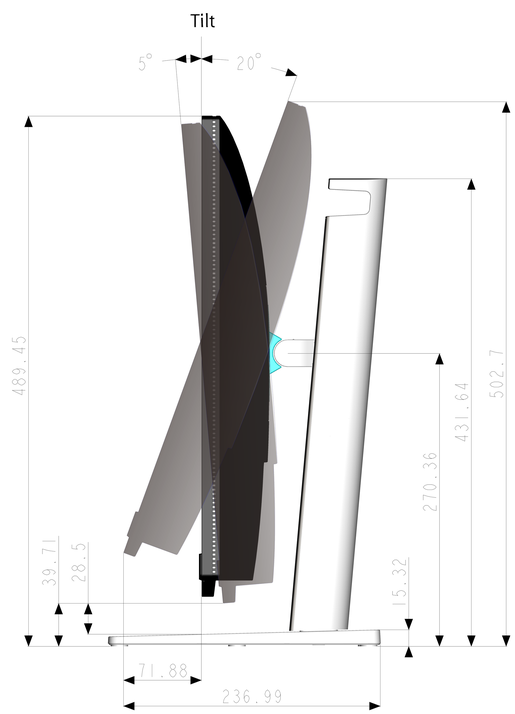
Unit : mm
Dimension : Norminal
Drawing : Not to Scale