Aruba Instant On 1830 Installation and Getting Started

Getting Started Guide

Copyright Information

© Copyright 2022 Hewlett Packard Enterprise Development LP.

Open Source Code

This product includes code licensed under the GNU General Public License, the GNU Lesser General Public License, and/or certain other open source licenses. A complete machine-readable copy of the source code corresponding to such code is available upon request. This offer is valid to anyone in receipt of this information and shall expire three years following the date of the final distribution of this product version by Hewlett Packard Enterprise Company. To obtain such source code, send a check or money order in the amount of US $10.00 to:

Hewlett Packard Enterprise Company
6280 America Center Drive
San Jose, CA 95002
USA

Notices

The information contained herein is subject to change without notice. The only warranties for Hewlett Packard Enterprise products and services are set forth in the express warranty statements accompanying such products and services. Nothing herein should be construed as constituting an additional warranty. Hewlett Packard Enterprise shall not be liable for technical or editorial errors or omissions contained herein.

Confidential computer software. Valid license from Hewlett Packard Enterprise required for possession, use, or copying. Consistent with FAR 12.211 and 12.212, Commercial Computer Software, Computer Software Documentation, and Technical Data for Commercial Items are licensed to the U.S. Government under vendor's standard commercial license.

Links to third-party websites take you outside the Hewlett Packard Enterprise website. Hewlett Packard Enterprise has no control over and is not responsible for information outside the Hewlett Packard Enterprise website.

Acknowledgments

Microsoft® and Windows® are either registered trademarks or trademarks of Microsoft Corporation in the United States and/or other countries.

Adobe® and Acrobat® are trademarks of Adobe Systems Incorporated.

Java® and Oracle® are registered trademarks of Oracle and/or its affiliates.

UNIX® is a registered trademark of The Open Group.

Contents

Contents 3

About this Document 4
- Applicable Products 4
- Related Publications 4

Overview 5
- Switch Hardware Features 5
- Switch Features 14

Site Preparation and Switch Installation Precautions 16
- Safety Recommendations 16
- Installation Precautions and Guidelines 16
- Prepare the Installation Site 17

Installation Overview 19
- Fan-free Design on some Switch Models 19
- Included Parts 19
- Installation Procedure 20

Initial Configuration 33
- Using the 192.168.1.1 IP Address 34
- Where to go from here 35

Troubleshooting 36
- Troubleshooting Overview 36
- Basic Troubleshooting Tips 36
- Diagnosing with the LEDs 36
- Testing the Switch by resetting it 38
- Restoring to Factory Defaults 38

Specifications 40
- Environmental Specifications 40
- Acoustics 40
- Standards 41
- Cabling and Technology Information Specifications 41

Support Information 43

Chapter 1
About this Document

This document is intended for network administrators and support personnel.

> The web interface pages illustrated in this document are examples and might not match your particular switch or environment.
> The switch and accessory drawings in this document are for illustration only, and may not match your particular switch and accessory products.

Applicable Products

Aruba Instant On 1830 8G Switch (JL810A)	AC Power Adapter: [1] ■ 13W External AC Adapter (5066-5562) ■ 13W External AC Adapter (5300-1005) ■ 15W External AC Adapter (5066-5563)
Aruba Instant On 1830 8G 4p Class4 PoE 65W Switch (JL811A)	
Aruba Instant On 1830 24G 2SFP Switch (JL812A)	
Aruba Instant On 1830 24G 12p Class4 PoE 2SFP 195W Switch (JL813A)	
Aruba Instant On 1830 48G 4SFP Switch (JL814A)	
Aruba Instant On 1830 48G 24p Class4 PoE 4SFP 370W Switch (JL815A)	

[1]Use with the JL810A Aruba Instant On 1830 8G Switch. All other Aruba Instant On 1830 switches operate with internal power supplies.

Related Publications

- Aruba Instant On 1830 Switch Series Quick Setup Guide and Safety/Regulatory Information
- Aruba Instant On 1830 8G/24G/48G Switch Series Management and Configuration Guide
- Aruba Instant On User Guide

To access the above publications, visit https://community.arubainstanton.com/.

Chapter 2
Overview

The Aruba Instant On 1830 Switch series are designed to meet the needs of small business network environments - simple to setup and manage, secure and reliable. Aruba Instant On deployments can be managed through a Mobile App supported on iOS and Android, a cloud portal that is accessible through a web browser, or a local web GUI.

These switches are intended for indoor use only. The switches comply with the safety standard IEC 60950-1, 2nd Edition and IEC 62368-1 2nd Edition. A tool is required to remove the top cover; however, the product is not considered serviceable by an operator. These switches can be directly connected to computers, printers, and servers to provide dedicated bandwidth to those devices, and you can build a switched network infrastructure by connecting the switch to hubs, other switches, or routers. In addition, these switches offer network management capabilities.

Switch Hardware Features

Figure 1 *Front of all 1830 Switches*

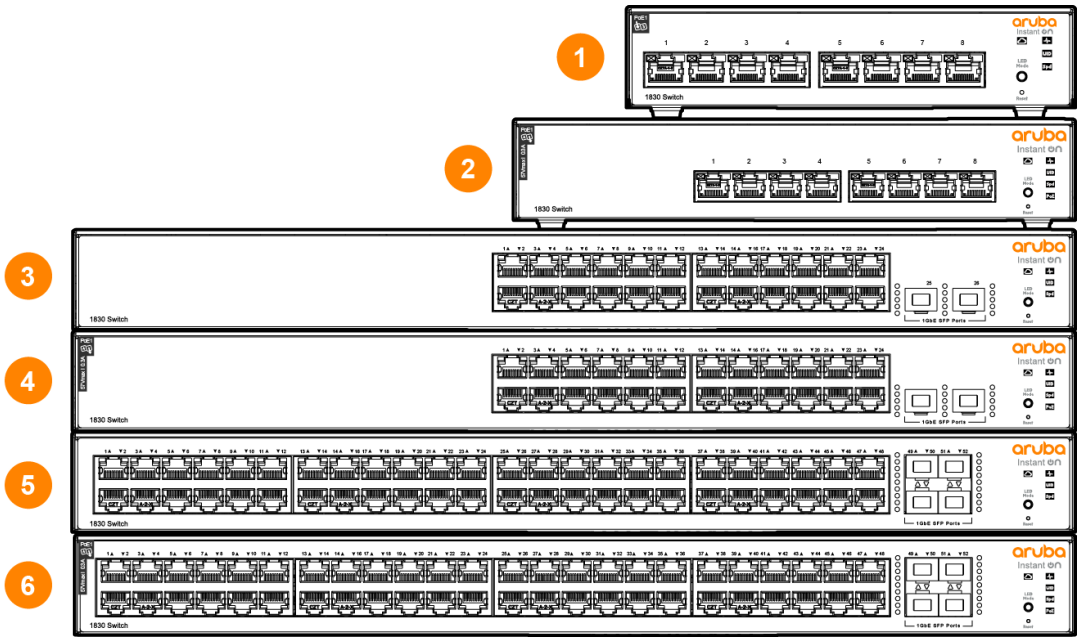

Figure 2 *JL810A*

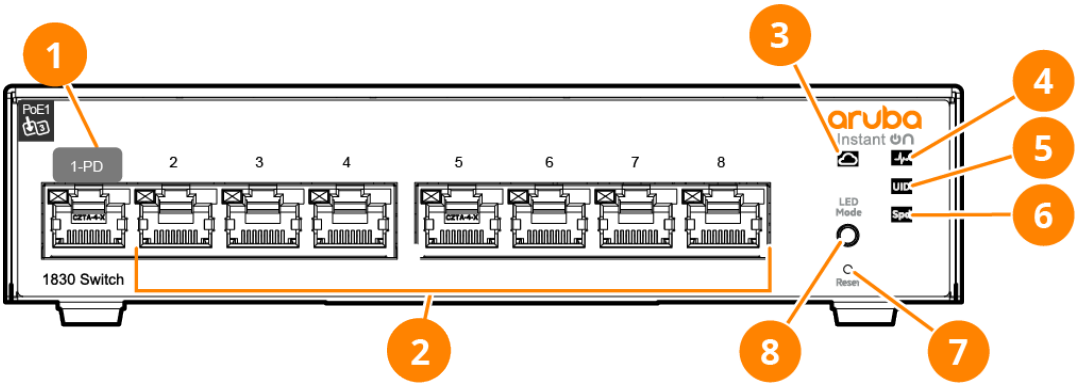

Item	Description
1	PD port
2	Additional Ethernet ports
3	Cloud Status LED
4	Global System LED
5	UID LED
6	Speed Mode LED
7	Reset push button
8	LED Mode push button

Figure 3 *JL811A*

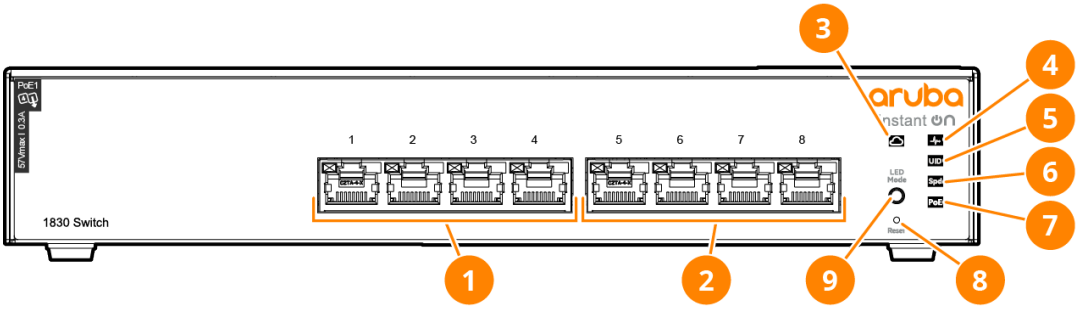

Item	Description
1	PoE & Ethernet ports
2	Ethernet ports
3	Cloud Status LED
4	Global Status LED

Item	Description
5	UID LED
6	Speed Mode LED
7	PoE LED
8	Reset push button
9	LED Mode push button

Figure 4 *JL812A*

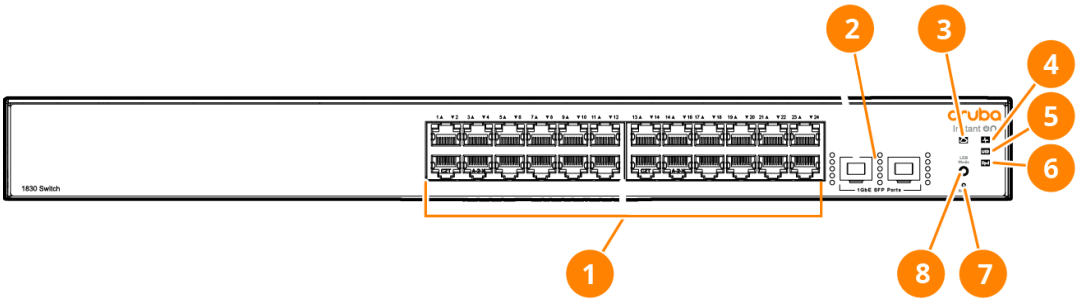

Item	Description
1	Ethernet ports
2	1GbE SFP ports
3	Cloud Status LED
4	Global Status LED
5	UID LED
6	Speed Mode LED
7	Reset push button
8	LED Mode push button

Figure 5 *JL813A*

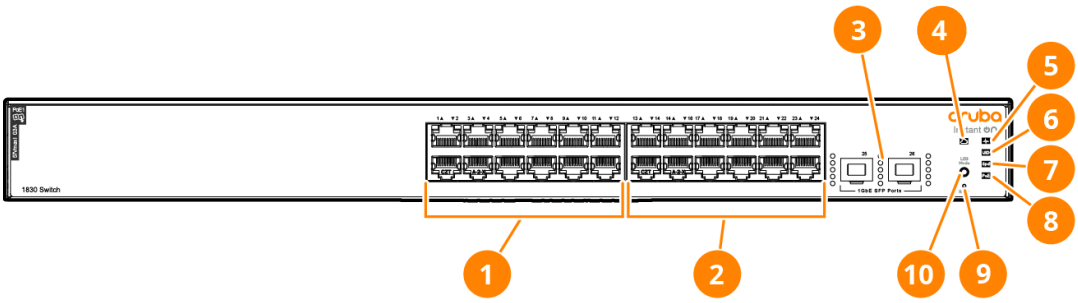

Item	Description
1	PoE Ports & Ethernet ports
2	Ethernet ports
3	1GbE SFP ports
4	Cloud Status LED
5	Global Status LED
6	UID LED
7	Speed Mode LED
8	PoE LED
9	Reset push button
10	LED mode push button

Figure 6 *JL814A*

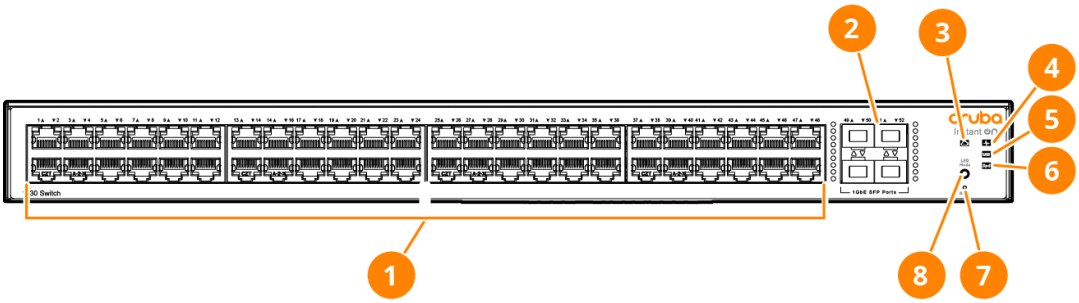

Item	Description
1	Ethernet ports
2	1GbE SFP ports
3	Cloud Status LED
4	Global Status LED
5	UID LED
6	Spd LED
7	Reset push button
8	LED mode push button

Figure 7 *JL815A*

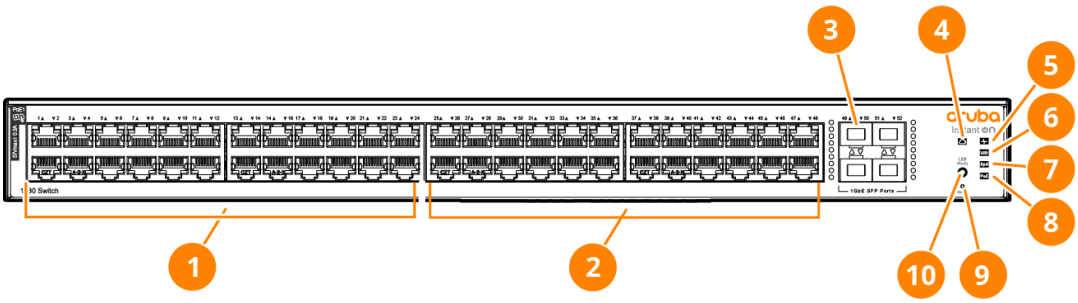

Item	Description
1	PoE & Ethernet ports
2	Ethernet ports
3	1 GbE SFP Ports
4	Cloud Status LED
5	Global Status LED
6	UID LED
7	Speed Mode LED
8	PoE Mode LED
9	Reset push button
10	LED Mode push button

Network Ports

- Auto-sensing 10/100/1000BASE-T ports:
  These ports have the "Auto-MDIX" feature, which means that you can use either straight-through or crossover twisted-pair cables to connect any network devices to the switch.
- Power-over-Ethernet (PoE) ports:
  The 1830 PoE Class 4 switches support the IEEE 802.3at standard, which allows IP telephones, wireless LAN Access Points, and other appliances to receive power as well as data over existing LAN cabling. For further information regarding PoE power, see the Hewlett Packard Enterprise Web site at https://asp.arubanetworks.com/downloads.

Transceivers not on the 1830 approved list are used at your own risk and may void support and warranty.

			Transceiver Form-Factor and Connector
Speed	**Technology**	**Cabling**	**SFP Connector**
1 Gbps	1000-T	Copper (twisted-pair)	RJ-45
	1000-SX	Fiber (multimode)	LC
	1000-LX	Fiber (multimode or single mode)	LC

PoE Power

1830 Switch Series PoE Power Delivery

Power Over Ethernet (PoE) functionality is supported on certain 1830 models, known as power source equipment (PSE) ports which provide power to connected devices. The devices receiving power through PoE are referred to as powered devices (PDs). The switch automatically detects the presence of a PD on a PSE port, and the switch uses physical layer classification to assign initial power to the PD. After the PD has powered up, the switch can refine the assigned power using LLDP communication messages from the PD. The PoE software supports two power modes to allocate power by Usage (default) or Class. The default Usage mode reclaims unused power for use by new PD connections or increased power demand by existing powered PDs. The configurable Class mode reserves the full PD requested class power from the total available power budget. Ports are assigned one of three configurable PoE priority values (Critical, High, and Low). When more power is requested than is available on the switch, the switch provides power to high priority ports before lower priority ports.

Power allocation can be scheduled so that power is supplied only during periods when the PD is actually in use. The 1830 Class 4 PoE switches support the IEEE 802.3at^{tm} standards providing 30W of power for Class 4 PD connections while maintaining backwards compatibility with IEEE 802.3af^{tm} standards providing 15.4W of power to Class 3 PD connections. All PoE Class 4 switch ports are capable of delivering 30W per PSE port up to the maximum power supply budget.

1830 PoE Model	Maximum PoE Power	PoE Port Count	Maximum Ports delivering at 15.4W	Maximum Ports delivering at 30W	EA Certified
Aruba Instant On 1830 8G Switch (JL810A)	13W	Port 1	-	-	3
Aruba Instant On 1830 8G 4p Class4 PoE 65W Switch (JL811A)	65W	Ports 1 - 4	4	2	4
Aruba Instant On 1830 24G 12p Class4 PoE 2SFP 195W Switch (JL813A)	195W	Ports 1 - 12	12	6	4

1830 PoE Model	Maximum PoE Power	PoE Port Count	Maximum Ports delivering at 15.4W	Maximum Ports delivering at 30W	EA Certified
Aruba Instant On 1830 48G 24p Class4 PoE 4SFP 370W Switch (JL815A)	370W	Ports 1-24	24	12	

Ethernet Alliance PoE Certified

Certified Aruba PoE power sourcing equipment (PSE) has been verified for IEEE 802.3™ PoE interoperability by passing the Ethernet Alliance (Gen 1 or Gen 2) PoE Certified program test plan, minimizing interoperability issues between PoE products.

The Ethernet Alliance PoE Certification Program provides thorough testing of PoE devices for interoperability with IEEE 802.3™ PoE standard devices. Certified products will be easily recognizable by the logos below, which also identify the amount of power available or required. User experience will be enhanced by minimizing confusion between standards-based PoE from proprietary powering solutions.

Gen 1 EA PoE Certified Logo

EA Certified™

Gen 2 EA PoE Certified Logo

EA Certified 2.0™

For more information on EA PoE Certification, visit the Ethernet Alliance website.

LEDs

The front panel of the switch provides status LEDs for system monitoring. The following table details the functions of the various indicators.

LED	State	Meaning
Global Status (Power, Self-test, Status, Fault)	On solid (green)	The switch has passed self-test and is powered up normally.
	Slow flash (orange)	A fault, fatal system error, or self-test failure has occurred on the switch, one of the switch ports, a PSU, or a fan. The LED will flash simultaneously with the faulty component.
	Off	The switch is NOT receiving power.

LED	State	Meaning
Cloud Status	Slow flash / On solid (green)	Switch is in the process of establishing a connection to the cloud portal. The switch is fully operational and in cloud manage mode once the LED becomes solid green.
	On (orange)	A fault has occurred and the switch is unable to connect to the cloud portal.
	Alternating flash (green/orange)	The switch is connected to the cloud portal and is ready for setup through the mobile App/Portal. This is a temporary state which occurs while the switch is connected to the cloud portal but not fully onboarded yet.
	Off	Switch management mode (cloud or web) has not been selected or the switch is in local web managed mode.
Port	Fast and slow flash / On solid (green)	▪ **Independent of Mode selected** ◦ When transceivers/SFPs are installed, this LED is also used to indicate that the installation has occurred by becoming solid green for 2 seconds, then off. ▪ **Mode (Link/Act)** ◦ Indicates successful link with Activity (flicker). ▪ **Mode (Spd)** ◦ On solid green - port is operating at max. port capable speed. ◦ Slow flashing green - port is operating at less than max. port capable speed. ▪ **Mode (PoE)** ◦ On solid green - port is providing PoE power.
	Fast and slow flash / On solid (orange)	▪ **Mode (Link/Act)** ◦ Slow-flash orange indicates port failure, non-supported transceiver, or transceiver failure. ▪ **Mode (Spd)** ◦ Slow-flash orange indicates port failure, non-supported transceiver, or transceiver failure. ▪ **Mode (PoE)** ◦ On solid orange indicates PoE power is disabled on the port. ◦ Fast flash orange indicates port is denied power or is detecting an external PD fault. ◦ Slow flash orange indicates port failure due to internal PoE specific hardware failure.
	Off	Port is disabled, not connected, not receiving link beat (not Linked), or not providing PoE power.
Mode	On solid (green)	▪ **Mode (Link/Act)** ◦ Default mode. No LED indicator - Mode (Spd) and Mode (PoE) not selected. ▪ **Mode (Spd)**

LED	State	Meaning
		◦ On solid green - Speed Mode is selected. Port LEDs indicate port speed. ▪ **Mode (PoE)** ◦ On solid green - PoE Mode is selected. Port LEDs show PoE information.
	On solid / Slow flash (orange)	▪ **Mode (PoE) NOT Selected** ◦ Slow flash orange - PoE Mode has NOT been selected. A port has an internal PoE hardware failure. ▪ **Mode (PoE)** ◦ On solid orange - PoE Mode is selected. A port has an internal PoE hardware failure. The specific port LED should flash simultaneously with Global Status LED.
	Off	▪ **Mode (Spd) not selected.** ▪ **Mode (PoE) not selected.**
UID	Slow flash (blue)	Locator LED identifying switch located.
	Off	One of these condition exists: ▪ User has not activated the Locator LED. ▪ User has turned off the Locator LED. ▪ User-configurable timeout period has expired; default time-out period is 30 minutes.

Mode Button

The 1830 PoE switches have one Mode LED per port. The Mode LED shows either the port speed or the PoE status. In PoE mode, it shows whether the port is configured to provide PoE power. The operation of the Mode LED is controlled by the Mode select button. Press the Mode button to select the PoE mode.

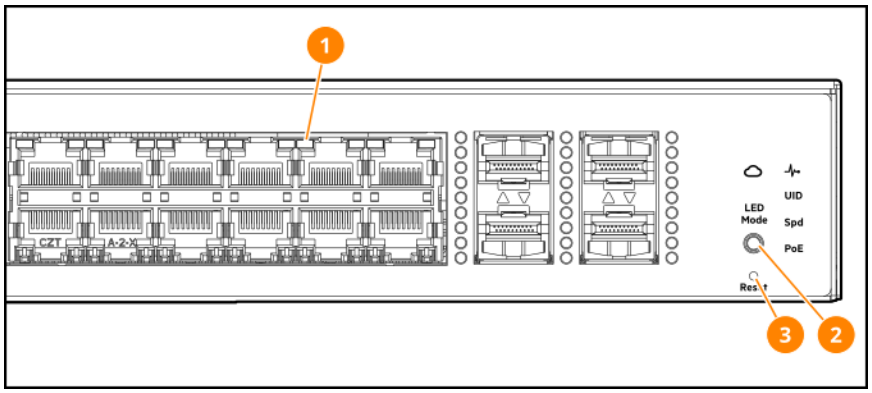

1	Port LEDs
2	LED Mode pushbutton
3	Reset pushbutton (recessed)

Reset Button

The Reset button (pictured in the preceding illustration) is used to restore Factory Default settings, or reset the switch while it is powered on.

- **Resetting the Switch** — Press and release the button. This action clears any temporary error conditions that may have occurred and executes the switch self test.
- **Restoring Factory Default Configuration** — Press and hold down for over 5 seconds, the switch will then complete its self test and begin operating with its configuration restored to the factory default settings. Any configuration changes you may have made through the web browser interface are removed.

When restoring to factory defaults,after pressing and holding the Reset pushbutton for 5 or more seconds, the UID LED will begin flashing.

Power Connector

1830 switches do not have a power switch. They are powered on when connected to an active power source.

Switches powered on when connected to an active AC power source[1]

- Aruba Instant On 1830 8G 4p Class4 PoE 65W Switch (JL811A)
- Aruba Instant On 1830 24G 2SFP Switch (JL812A)
- Aruba Instant On 1830 24G 12p Class4 PoE 2SFP 195W Switch (JL813A)
- Aruba Instant On 1830 48G 4SFP Switch (JL814A)
- Aruba Instant On 1830 48G 24p Class4 PoE 4SFP 370W Switch (JL815A)

These switches automatically adjust to any voltage between 100-127 and 200-240 volts and either 50 or 60 Hz. There are no voltage range settings required.

Switches powered on when the external AC/DC power adapter is connected to the switch and to an active power source, or to an external PSE (PoE Power Sourcing Equipment device)[2]

Aruba Instant On 1830 8G Switch (JL810A)

The external AC/DC power adapter supplies 12 volts DC to the switch and automatically adjusts to any AC voltage between 100-240 volts and either 50 or 60 Hz. No voltage range settings are required.

[1]These switches automatically adjust to any voltage between 100-127 and 200-240 volts and either 50 or 60 Hz. There are no voltage range settings required.
[2]The external AC/DC power adapter supplies 12 volts DC to the switch and automatically adjusts to any AC voltage between 100-240 volts and either 50 or 60 Hz. No voltage range settings are required.

Switch Features

The features of the 1830 Switches include:

- 8, 24, or 48 auto-sensing 10/100/1000BASE-T RJ-45 ports.
- 2 SFP for 24G
- 4 SFP for 48G

- plug-and-play networking—all ports are enabled—just connect the network cables to active network devices and your switched network is operational.
- IEEE 802.3ab Auto MDI /MDI-X on all twisted-pair ports, meaning that all connections can be made using straight-through twisted-pair cables. Cross-over cables are not required, although they will also work. The pin operation of each port is automatically adjusted for the attached device. If the switch detects that a 10/100/1000 Mbps switch or hub is connected to the port, it configures the port as MDI. If the switch detects that a 10/100/1000 Mbps end-node device is connected to the port, it configures the port as MDI-X.
- all switches support IEEE 802.3az Energy Efficient Ethernet (EEE) features that reduce power consumption when connected with EEE-compliant client devices.
- automatic learning of MAC addresses in each switch's 8K-address (8-port switches) or 16K-address (24 and 48-port switches) forwarding table.
- automatically negotiated full-duplex operation for all 10/100/1000BASE-T RJ-45 ports when connected to other auto-negotiating devices
- easy management of the switch through several available interfaces:
  - Web browser interface — an easy to use, built-in graphical interface that can be accessed from common Web browsers.
  - Aruba Instant On Portal -- allows network administrators to configure and monitor Aruba Instant On switches and wireless access points through a mobile application or desktop browser app.
- support for up to 64 IEEE 802.1Q-compliant VLANs so you can divide the attached end nodes into logical groupings that fit your business needs.
- support for up to 16 trunks (48-port switches) so you can assign physical ports to a logical trunk group that functions as a single, higher-speed link providing dramatically increased bandwidth.
- download of new switch software for product bug fixes.

Chapter 3
Site Preparation and Switch Installation Precautions

Safety Recommendations

Before installing an Aruba Instant On 1830 switch, and to avoid possible bodily injury and equipment damage, carefully read these information sources before installation:

- START HERE: Setup, Safety, and Regulatory Information for the Aruba Instant On 1830 Switch Series (shipped with the switch and also available online.
- All documentation shipped with the switch.
- All safety recommendations included in this guide.

The recommendations in the documentation for the Aruba Instant On 1830 switches do not cover every possible hazardous condition.

Additional regulatory and safety information

For important safety, environmental, and regulatory information, see Safety and Compliance Information for Server, Storage, Power, Networking, and Rack Products, available at http://www.hpe.com/support/Safety-Compliance-EnterpriseProducts

Installation Precautions and Guidelines

To help avoid personal injury or product damage when installing your switch, read the following installation precautions and guidelines.

- To prevent the rack or cabinet from becoming unstable, tilting, and/or falling over, ensure that it is adequately secured.
- Mount devices installed in a rack or cabinet as low as possible. Put the heaviest devices at the bottom, and progressively lighter devices positioned higher. Note, however, that the preferred position for the fanless Aruba Instant On 1830 switches is at the base of the rack or cabinet (for optimal cooling) or below as many of the other products as can be accommodated.
- If you wall-mount the switch, the network ports must face upward or downward (that is, toward or away from the floor). Do **not** wall-mount the switch with the side ventilation holes facing up or down.

This section provides precautions and guidelines to observe when installing your switch.

- All Aruba Instant On 1830 Switches support table-top mounting.
- All Aruba Instant On 1830 Switches support rack-mounting except JL810A.
- All Aruba Instant On 1830 Switches support wall-mounting with ports facing either up or down.
- All Aruba Instant On 1830 Switches support under-table mounting.
  - JL811A and JL812A must be mounted top surface up using the brackets provided.
  - To prevent possible impact to long-term reliability, the product should not be mounted upside-down.
  - JL813A, JL814A, and JL815A can be mounted either top surface up or upside down, using the brackets provided.
  - JL810A must be mounted upside down, using the base surface mounting holes.
- Use only supported Aruba transceivers.

- Ensure that the power source circuits are properly grounded. Then connect the switch to the AC power source by using the power cord supplied with the switch.
- Ensure that the power cord and network cables at the switch mounting location do not create a tripping hazard.
- When installing the switch, the AC outlet must be near the switch and easily accessible in case the switch must be powered off.
- Ensure that the switch does not overload the power circuits, wiring, and over-current protection. To determine the possibility of overloading the supply circuits:
  1. Add the ampere ratings of all devices installed on the same circuit as the switch.
  2. Compare the total with the rating limit for the circuit.

  The maximum ampere ratings are usually printed on the devices near the AC power connectors.
- Avoid blocking any ventilation openings on the top, sides, rear, or front of the switch.
- Ensure that the air flow around the switch is not restricted. Leave at least 7.6 cm (3 inches) for cooling.
- Do not install the switch in an environment where the operating ambient temperature exceeds its specification. See environmental and physical specifications for more information.

Prepare the Installation Site

Make sure the physical environment into which you will be installing the switch is properly prepared, including having the correct network cabling ready to connect to the switch and having an appropriate location for the switch.

- Verify that copper and fiber cabling meets the requirements of the Cabling and Technology Information Specifications.
- Protect the switch from radio frequency interference emissions.
- Use electrical surge suppression.
- Use safe connections with no damaged cables, connectors, or shields.

Ensure that you understand and observe the two preceding sections before proceeding with switch installation.

Mounting options

Select one of the following mounting methods for a 24- or 48-port 1830 switch:

- 19-inch Telco rack
- Wall attach
- Equipment cabinet
- Under a table
- On a horizontal surface

Select one of the following mounting methods for a 1830 8-port switch:

- 19-inch Telco rack
- Wall attach
- Under a table
- On a horizontal surface

Installation Space Requirements

Switch Orientation	Clearance Requirements
Front	At least 7.6 cm (3 inches) of space for the twisted-pair and fiber-optic cabling.
Back	At least 3.8 cm (1 1/2 inches) of space for the power cord and switch cooling.
Sides	At least 7.6 cm (3 inches) for cooling, except if the switch is installed in an open EIA/TIA rack.

Chapter 4
Installation Overview

If you have not already done so, carefully read Site Preparation and Switch Installation Precautions.

The switches are easy to install. They ship with an accessory kit containing brackets for mounting the switches in a standard 19-inch telco rack or in an equipment cabinet. Included also are rubber feet for securely locating the switch on a horizontal surface. The brackets are designed to allow mounting of the switches in a variety of locations and orientations. This chapter shows how to install the switches.

Fan-free Design on some Switch Models

The following Aruba Instant On 1830 switch models have a fan-free design, making them quiet for office deployments.

- Aruba Instant On 1830 8G Switch (JL810A)
- Aruba Instant On 1830 8G 4p Class4 PoE Switch SFP Switch (JL811A)
- Aruba Instant On 1830 24G 2SFP Switch (JL812A)

A warmer than normal enclosure is a standard state of operation for a fan-free switch. Although the top of the switch enclosure may feel warm to the touch, it has no effect on functionality or performance of the product. For rack-mounted 1830 fanless switches, ensure that a 1U (44.45 mm / 1.75-inch) vertical space is maintained between the switch and the device above it.

Included Parts

The following components ship with a 1830 Switch:

- Documentation kit
  - Aruba Instant On 1830 Start Here: Installation, Safety, and Regulatory Information
  - Aruba Instant On 1830 Quick Card
  - Additional safety and regulatory information

For the latest version of documentation for your switch model, visit the Aruba Instant On Support site at https://community.arubainstanton.com/.

- Software License, Warranty, and Support information
- Power cord and/or AC/DC power adapter, depending on the switch model.
- One of the following accessory kits:

JL810A
Kit number 5300-1490

JL810A
▪ 4 rubber feet ▪ 1 tie strap ▪ 3 screws (M4, 16T, 20mm) ▪ 3 anchors

JL811A
Kit number 5400-3784 ▪ 4 rubber feet ▪ 1 tie strap ▪ 3 screws (M4, 16T, 20mm) ▪ 3 anchors ▪ 8 screws (M4, P0.7, 8mm) ▪ 4 bolts ▪ 2 mounting brackets

JL812A, JL813A, JL814A, JL815A
Kit number 5300-1491 ▪ 4 rubber feet ▪ 1 tie strap ▪ 8 screws (M4, P0.7, 8mm) ▪ 4 bolts ▪ 2 mounting brackets

Japan Power Cord Warning

製品には、同梱された電源コードをお使い下さい。
同梱された電源コードは、他の製品では使用出来ません。

Installation Procedure

These steps summarize switch installation. The rest of this chapter provides details on these steps.

Procedure

1. **Prepare the installation site**. If you have not already done so, carefully read the chapter describing Site Preparation and Switch Installation Precautions
2. **Verify that the switch passes self-test**.
3. **Mount the switch**.
4. **Connect power to the switch**.
5. **Connect the network devices**.
6. **(Optional) Install SFP transceivers**. Depending on where you install the switch, it may be easier to install the SFPs first. SFPs can be hot-swapped—they can be installed or removed while the switch is powered on.

Use only Aruba transceivers in 1830 switches. Using any other transceivers is done at your own risk and may void support and warranty.

1. Prepare the Installation Site

If you have not already done so, carefully read Site Preparation and Switch Installation Precautions. Be sure to follow the provided guidelines to ensure proper operation when installing the switch into a network:

2. Verify the Switch Passes Self Test

Before mounting the switch, verify it is working properly by plugging it into a power source and confirming that it passes self test.

Procedure

1. **For JL810A switches**, connect the AC/DC adapter's power cord to the power connector on the back of the switch, and then plug the AC/DC power adapter into a nearby, properly grounded electrical outlet.

   Figure 8 *Connecting AC/DC Power Adapter*

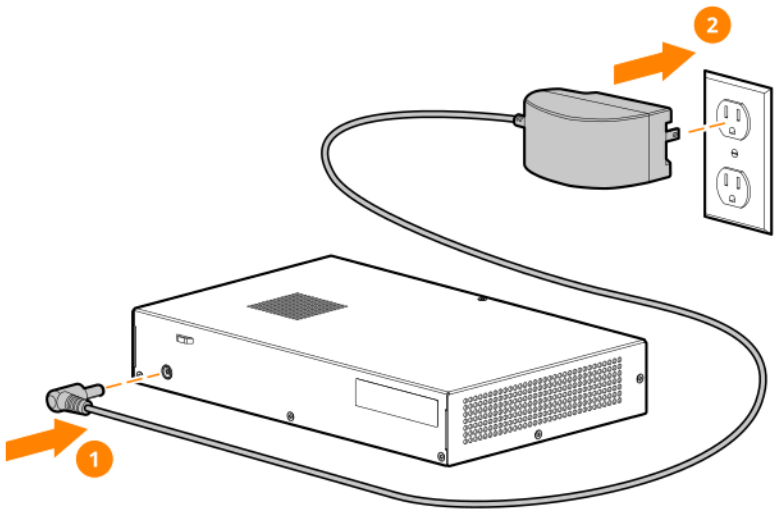

2. **For JL810A switches powered by Ethernet LAN Cable**, connect the LAN cable on Port 1 from a remote PoE Switch or Power Injector/AC.

Figure 9 *Connecting Ethernet Cable with PoE*

3. 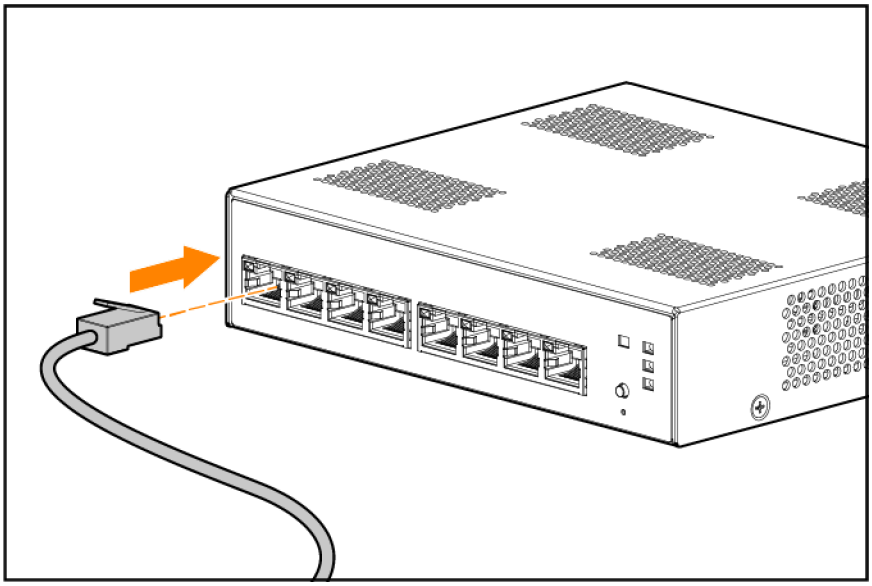

4. **For JL811A, JL812A, JL813A, JL814A, and JL815A,** connect the power cord supplied with the switch to the power connector on the back of the switch, and then into a properly grounded electrical outlet.

Figure 10 *Connect ing Power Cord*

5. 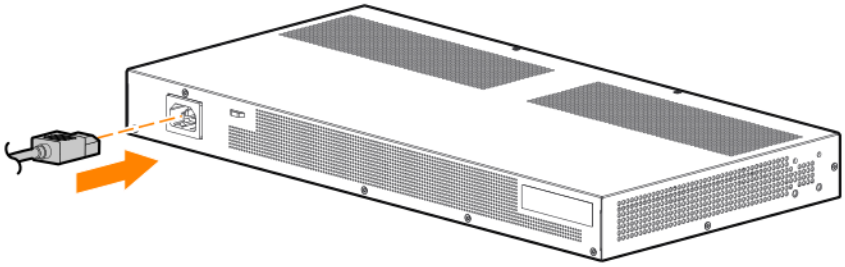

The 1830 switches do not have a power switch. They are powered on when the power cord is connected to the switch and to a power source. For safety, locate the switch installation near the power outlet.
The switches automatically adjust to any voltage between 100-127 or 200-240 volts and either 50 or 60 Hz. There are no voltage range settings required.

6. Check the LEDs on the switch as described below.

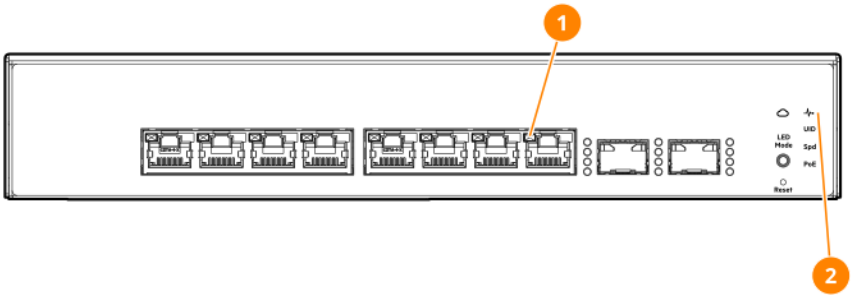

1	Port Link/Act, Speed, and PoE status LEDs
2	Global Status LED

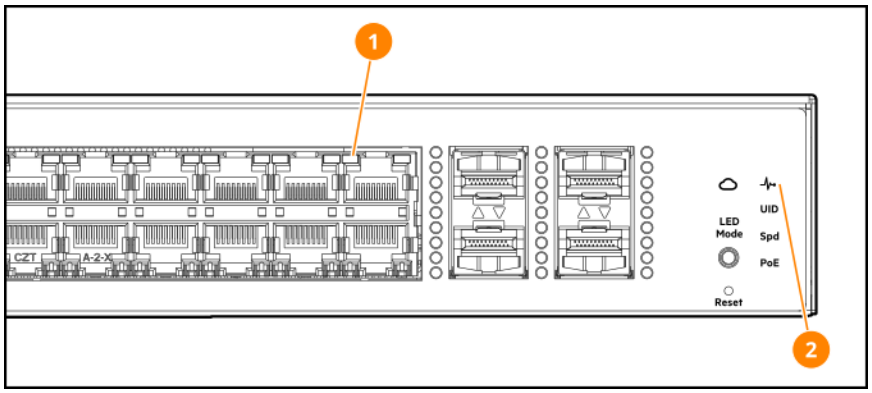

1	Port Link/Act, Speed, and PoE status LEDs
2	Global Status LED

When the switch is powered on, it performs a diagnostic self test. The behavior of the LEDs is as follows:

During the self test:

- Initially, all LEDs except **Cloud Status**LED will turn on and UID LED will flash blue.
- After several seconds, the **UID**, **Speed**, and **PoE** LEDs turn off and the **Cloud** and **Global Status** LEDs flash green and orange, respectively.

When the self test completes successfully:

- The **Global Status** LED remains on.
- The **UID** LED stays off.
- The **Cloud Status** LED will match the status of the onboarding process to the cloud portal.
- The port LEDs on the front of the switch go into their normal operational mode:
  - If the ports are connected to active network devices, in default **Link/Act Mode**, the port LEDs stay on or may be blinking, to indicate port link/activity. In **Speed Mode**, the port LEDs are on green for

link speeds of 1000Mbps or above, and slow-flash-green for link speeds less than 1000Mbps. For PoE switches, in PoE Mode, the port LEDs reflect the earlier defined behavior, depending on the PoE state of the switch.

- If the ports are not connected to active network devices, the port **Link/Act**, **Spd**, and **PoE** status will be off.

If the LED display is different than what is described above, the self test has not completed correctly. Refer to Diagnosing with the LEDs for diagnostic help.

7. Remove power to the switch before mounting.

3. Mount the Switch

Unplug the AC or DC power from the switch before mounting it.

The switch can be mounted in these ways:

- on a horizontal surface
- on a wall
- under a table
- in a rack or cabinet

- All Aruba Instant On 1830 Switches support table-top mounting.
- All Aruba Instant On 1830 Switches except JL810A support rack-mounting.
- All Aruba Instant On 1830 Switches support wall-mounting with ports facing either up or down.
- All Aruba Instant On 1830 Switches support under-table mounting.
  - JL811A and JL812A must be mounted top surface up using the brackets provided.
    - To prevent possible impact to long-term reliability, product should not be mounted upside-down.
  - JL813A, JL814A, and JL815A can be mounted either top surface up or upside down.
  - JL810A must be mounted upside down.

Rack or Cabinet Mounting

All switches, except the Aruba Instant On 1830 8G Switch (JL810A), can be mounted in a rack. The switches are designed to be mounted in any EIA-standard 19-inch Telco rack or communication equipment cabinet.

For safe operation, please read Installation Precautions and Guidelines before mounting the switch.

The screws supplied with the switch are the correct threading for standard EIA/TIA open 19-inch racks. If you are installing the switch in an equipment cabinet such as a server cabinet, use the clips and screws that came with the cabinet in place of the screws that are supplied with the switch.
Complete the following step 1 to attach brackets to the switch. Then, plan which four holes you will be using in the cabinet and install all four clips. Then proceed to step 2 to install the switch in the cabinet.

Procedure

1. Use a #1 Phillips (cross-head) screwdriver and attach the mounting brackets to the switch with the included 8-mm M4 screws.

   Figure 11 *Attaching mounting brackets to switch*

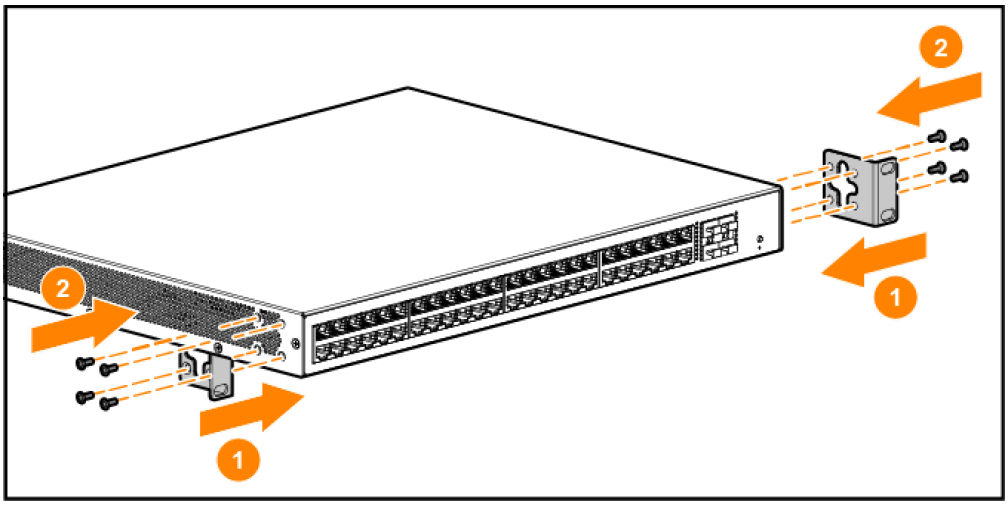

   The mounting brackets have multiple mounting holes and can be rotated allowing for a variety of mounting options. These include mounting the switch so its front face is flush with the face of the rack, as shown in the illustration.

2. Hold the switch with attached brackets in the rack and move it vertically until rack holes line up with the bracket holes, then insert and tighten the four 12-24 screws holding the brackets to the rack.

Figure 12 *Securing switch on rack*

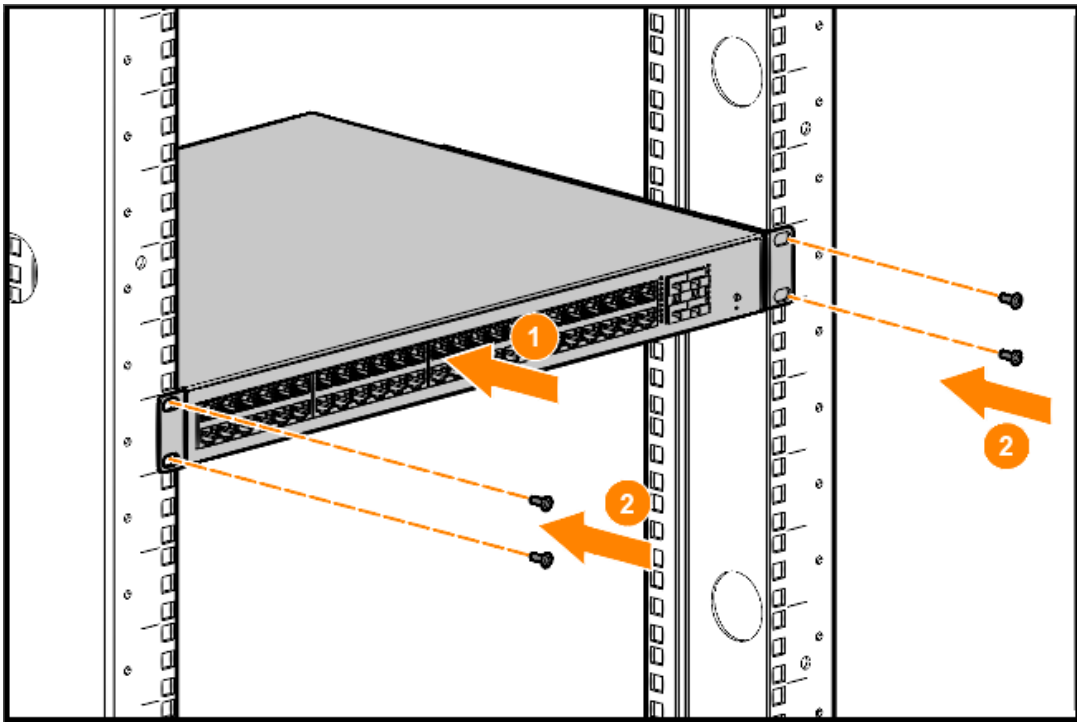

Wall Mounting

You can mount all switches on a wall with either the front or rear panel facing up.

For safe operation, please read Installation Precautions and Guidelines before mounting the switch. Wall mount the switch with the network ports facing up or down.

The switch should be mounted only to a wall or wood surface that is at least 1/2-inch (12.7 mm) plywood or its equivalent.

To mount the 24- and 48-port switches, follow these steps:

1. Use a #1 Phillips (cross-head) screwdriver and attach the mounting brackets to the switch with the included 8-mm M4 screws.
2. Attach the switch to the wall or wood surface with two 5/8-inch number 12 wood screws (not included).

Figure 13 *Attaching switch to wall*

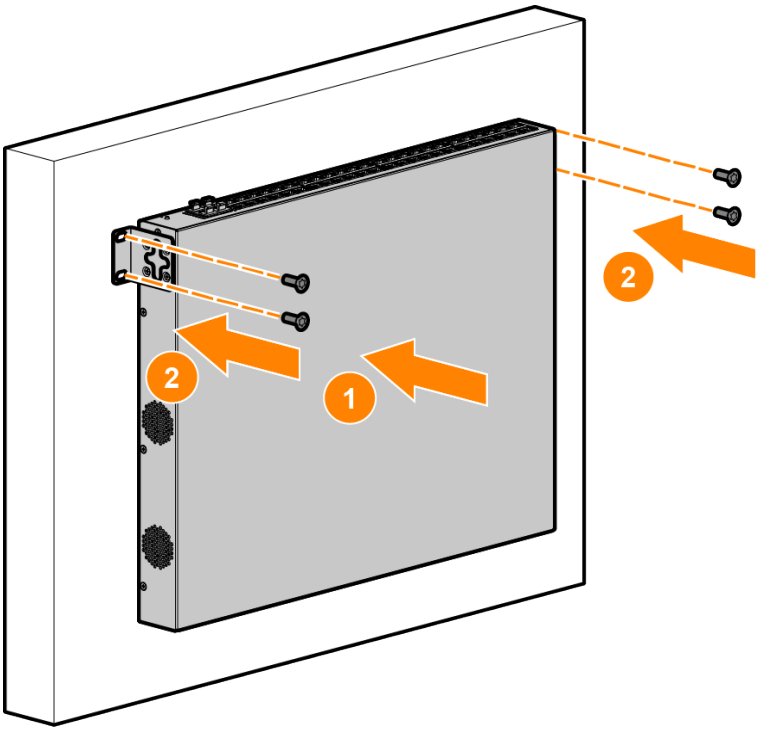

To mount the 8-port switches, follow these steps:

1. In the required location, mark the position for the mounting screws. Refer to the diagrams below for the ports-down mounting hole locations of JL810A and JL811A.

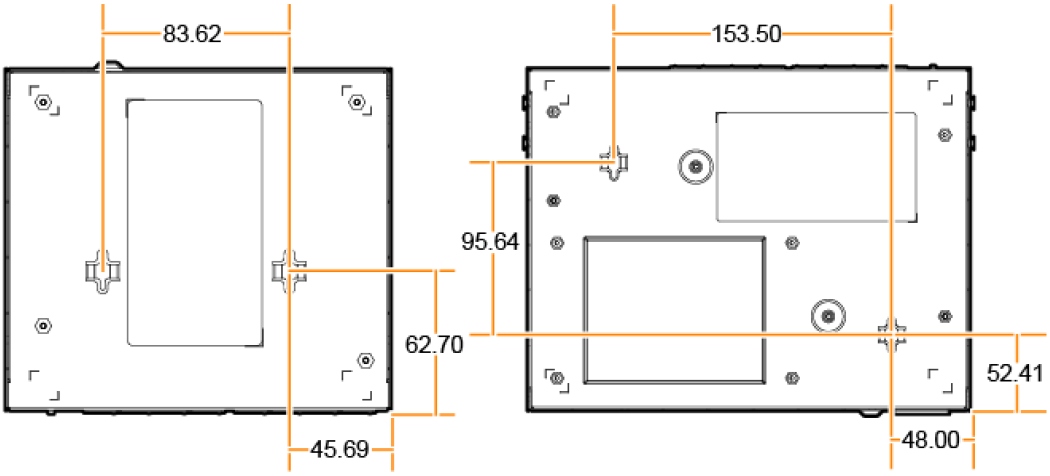

2. Use a #1 Phillips (cross-head) screwdriver and two of the included 20-mm M4 tap screws. Set the screw heads approximately 2 mm away from the mounting surface to allow the switch to slide onto the screws.

3. Wall anchors are included in the accessory kit for use with plastered brick or concrete walls.

Figure 14 *Securing switch to wall*

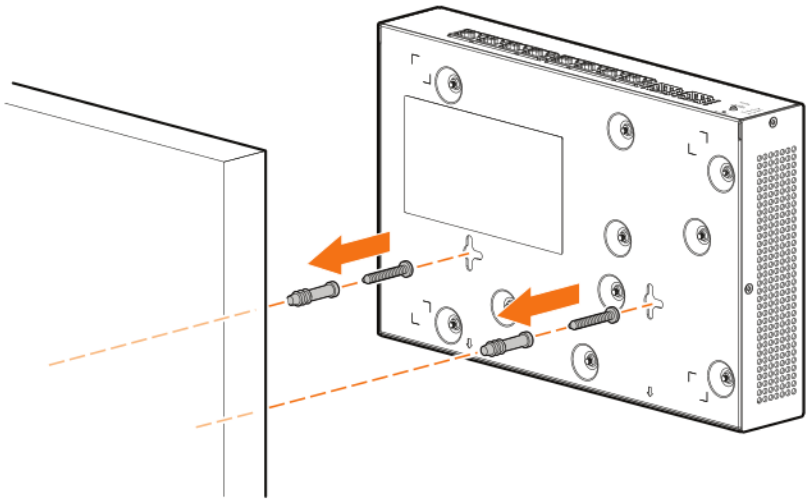

4. For under-table mounting, a third 20-mm M4 tap screw can be placed against one side of the switch to secure it in place.

Under-Table Mounting

You can mount all switches beneath a table.

For safe operation, please read Installation Precautions and Guidelines before mounting the switch. JL811A and JL812A must be mounted top surface up using the brackets provided.

The switch should be mounted only to a wall or wood surface that is at least 1/2-inch (12.7 mm) plywood or its equivalent.

To mount the 8PoE, 24- and 48-port switches, follow the same steps for Wall Mounting and proceed as follows:

1. Use of the brackets provided to mount models JL811A, JL812A, JL813A, JL814A, and JL815A.
2. When mounting the JL810A switch, place a third 20-mm M4 tap screw against one surface to secure it.

Figure 15 *Securing switch under table*

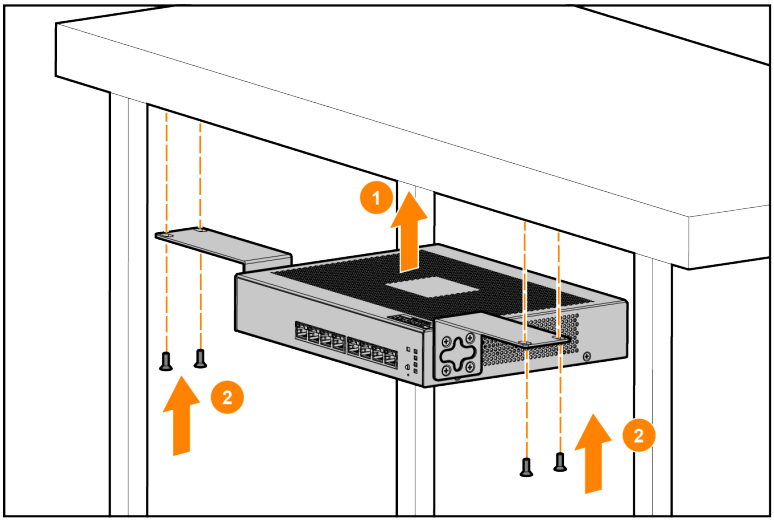

Horizontal Surface Mounting

All 1830 switches can be mounted on a horizontal surface.

Place the switch on a table or other horizontal surface. The switch comes with rubber feet in the accessory kit that can be used to help keep the switch from sliding on the surface.

Attach the rubber feet to the four corners on the bottom of the switch within the embossed angled lines. Use a sturdy surface in an uncluttered area. You may want to secure the networking cables and switch power cord to the table leg or other part of the surface structure to help prevent tripping over the cords.

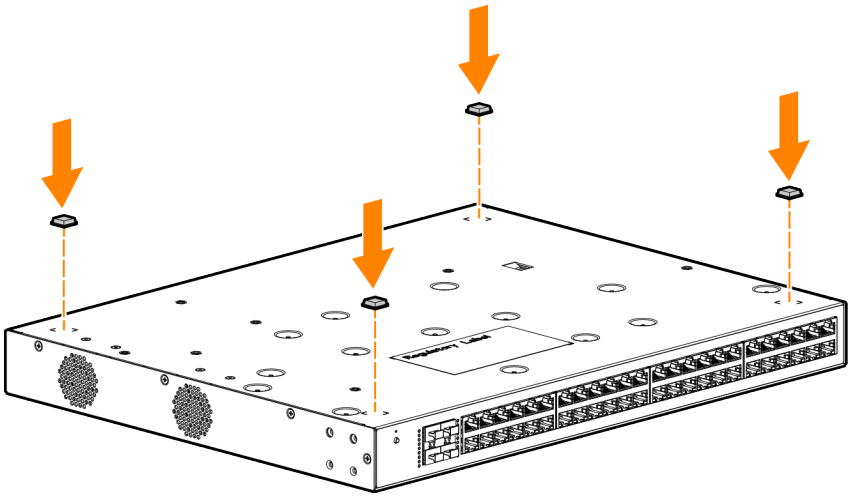

Nothing should be placed on top of the switch. Adequate spacing on all sides needs to be maintained for ventilation.

5. Connect the Network Cables

Connect the network cables, from the network devices or your patch panels, to the fixed RJ-45 ports on the switch or to any SFP transceivers you have installed in the switch.

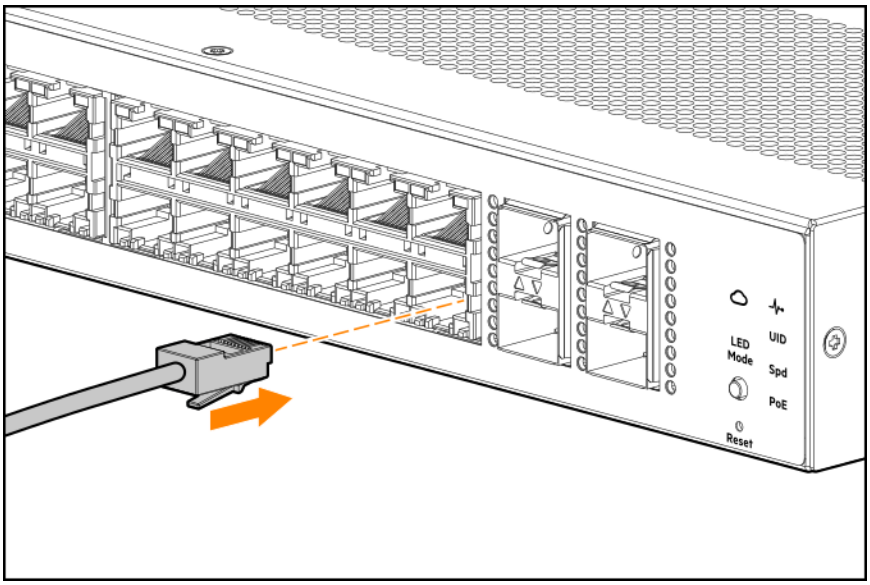

100–ohm unshielded or shielded twisted pair cable:

- Category 3, 4, or 5 for 10 Mbps ports
- Category 5 only for 100 Mbps ports
- Category 5, 5e, or 6 for 1000 Mbps ports

Maximum distance: 100 meters

When a network cable from an active network device is connected to the port, the port LEDs for that port should go on. If the port LEDs do not go on when the network cable is connected to the port, see Diagnosing with the LEDs.

6. Installing or Removing SFPs

You can install or remove an SFP from an SFP slot without having to power off the switch.

Hot swapping transceivers is supported. You can install or remove a transceiver with the switch powered on, a reset will not occur. However, rapid hotswaps are not recommended. Wait a few seconds for the Mode LED to turn on (during initialization), and then turn off.

Ensure the network cable is NOT connected when you install or remove an SFP.

Supported Transceivers

Aruba 1830 switches do not support 100FX transceivers.

Aruba Instant On 1830 24G 2SFP Switch	Aruba Instant On 1830 24G 12p Class4 PoE 2SFP 195W Switch	Aruba Instant On 1830 48G 4SFP Switch	Aruba Instant On 1830 48G 24p Class4 PoE 4SFP 370W Switch
JL812A	**JL813A**	**JL814A**	**JL815A**

Aruba Instant On 1830 24G 2SFP Switch	Aruba Instant On 1830 24G 12p Class4 PoE 2SFP 195W Switch	Aruba Instant On 1830 48G 4SFP Switch	Aruba Instant On 1830 48G 24p Class4 PoE 4SFP 370W Switch
Aruba 1G SFP LC SX 500m MMF Transceiver (J4858D)	Aruba 1G SFP LC SX 500m MMF Transceiver (J4858D)	Aruba 1G SFP LC SX 500m MMF Transceiver (J4858D)	Aruba 1G SFP LC SX 500m MMF Transceiver (J4858D)
Aruba I 1G SFP LC LX 10km SMF Transceiver (J4859D)	Aruba 1G SFP LC LX 10km SMF Transceiver (J4859D)	Aruba 1G SFP LC LX 10km SMF Transceiver (J4859D)	Aruba 1G SFP LC LX 10km SMF Transceiver (J4859D)
Aruba 1G SFP RJ45 T 100m Cat5e Transceiver (J8177D)	Aruba 1G SFP RJ45 T 100m Cat5e Transceiver (J8177D)	Aruba 1G SFP LC LX 10km SMF Transceiver (J4859D)	Aruba 1G SFP RJ45 T 100m Cat5e Transceiver (J8177D)

Installing the SFPs

Remove the protective plastic cover and retain it for later use. Hold the SFP by its sides and gently insert it into any of the slots on the switch until the SFP clicks into place.

The Aruba SFPs are Class 1 laser devices. Avoid direct eye exposure to the beam coming from the transmit port.

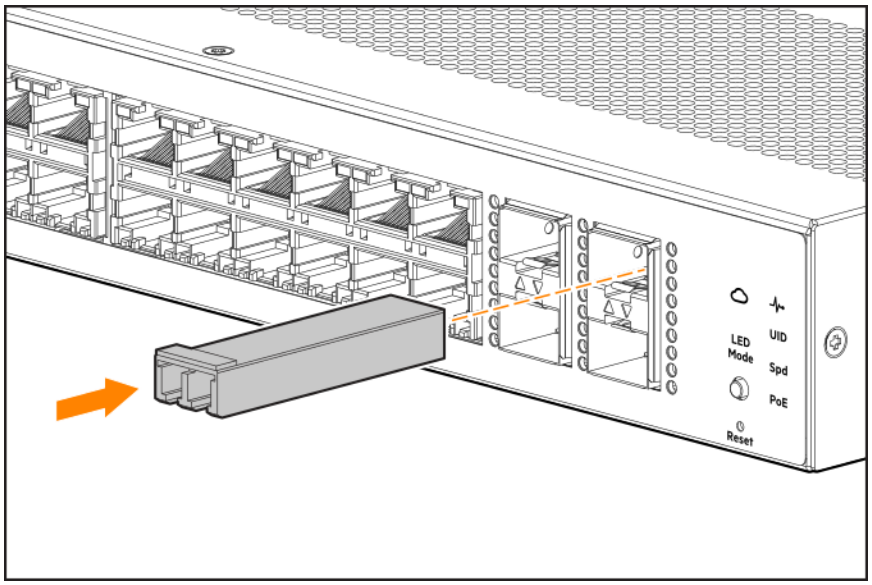

Removing the SFPs

You should disconnect the network cable from the SFP before removing it from the switch.

To remove the SFPs that have the plastic tab or plastic collar, push the tab or collar toward the switch until you see the SFP release from the switch (you can see it move outward slightly), and then pull it from the slot.

To remove the SFPs that have the wire bail, lower the bail until it is approximately horizontal, and then using the bail, pull the SFP from the slot.

Replace the protective plastic cover on the SFP.

Connecting Cables to SFPs

If you have any SFPs installed in the switch, the type of network connections you will need to use depends on the type of SFPs you have installed. See the table in Network ports, and appendix A, Cabling and Technology Information Specifications, for the SFP cabling information.

For SFP ports, and in general for all the switch ports, when a network cable from an active network device is connected to the port, the port Link LED for that port should go on. If the port Link LED does not go on when the network cable is connected to the port, see Diagnosing with the LEDs.

SFP Installation Notes

When selecting a fiber SFP device, make sure it can function at a maximum temperature that is not less than the recommended maximum operational temperature of the product. Use only an approved Laser Class 1 SFP transceiver.
To ensure proper operation of your switch, use only the Aruba SFP transceivers supported by your switch.

Use only supported Aruba SFP transceivers. Non-Aruba SFP transceivers are not supported. Use of supported Aruba products ensures that your network maintains optimal performance and reliability. If you require additional transceivers, contact an HPE Aruba sales representative or an authorized reseller.

Hot Swapping SFP transceivers. Disconnect the network cables from the SFP transceivers before hot-swapping them.

When you replace an SFP transceiver with another of a different type, the switch may retain selected port-specific configuration settings that were configured for the replaced unit. Be sure to validate or reconfigure port settings as required.

SFP Connections to Devices with Fixed Speed/Duplex Configurations. When connecting a device to your switch port that contains an SFP transceiver, the speed and duplex settings of the switch port and the connected device must match. If the settings do not match, the device may not link properly—you may not get a link. For some older network devices, the default speed/duplex settings may be predefined. There may also be other settings that differ from the default configuration of your switch port. Because of these default speed/duplex considerations, make sure that devices connected to your SFP ports are properly configured. At a minimum, make sure the configurations match.

Chapter 5
Initial Configuration

The 1830 Switch Series can be managed in one of two ways:

- Through a Web-browser interface that you can access from any PC or workstation connected to the switch.
- Through the Aruba Instant On Cloud Portal.

To access the Web interface, you must have the switch's Internet Protocol (IP) address. In the factory default configuration, the IP address is automatically acquired from a Dynamic Host Configuration Protocol (DHCP) service that is available on your network. Most routers provide this service. The DHCP service automatically provides a network IP address configuration to devices that request it, such as the 1830 switches.

Many features are configurable on the 1830. An user configurable management password will be required for switch security. Follow these procedures to access the switch's Web interface to perform the switch configuration:

Procedure

1. Place the switch close to the PC that you will use for configuration. It helps if you can see the front panel of the switch while working from your PC.
2. Connect power to the switch, and then start your PC (if it is not already running) and wait until the switch and PC have finished their start-up sequences.
3. Connect the PC to any port on the switch using a standard Ethernet LAN cable. Verify that there is a link between the switch and PC by checking the LEDs for the network port that you are using.
4. If the switch has access to a DHCP service, it automatically acquires an IP address. Determine the IP address of the switch by examining the client IP address table on your DHCP server or router (see the router documentation for how to get this information). Another method for determining the switch IP address is to connect the switch to your network through an adjacent network switch capable of LLDP operation.

   If a DHCP service is not available in your network, or for some reason the switch does not acquire an IP address from the service, the switch defaults to IP address **192.168.1.1** after 120 seconds of automatically attempting to acquire an IP address.

   > Alternatively, if you cannot determine the switch's IP address, you can force it to use the 192.168.1.1 address by first disconnecting the switch from the network and then unplugging and reconnecting power to it.

   To communicate with the switch using the 192.168.1.1 address, see Using the 192.168.1.1 IP Address before continuing these steps.
5. From the PC connected to the switch, open a Web-browser session and enter the switch's IP address as the URL. A landing page displays asking you to choose how to manage the switch. If you choose to proceed using the Aruba Instant On Cloud Portal, follow the instructions within the portal's interface. Otherwise, click **Connect** and follow the steps below.

6. 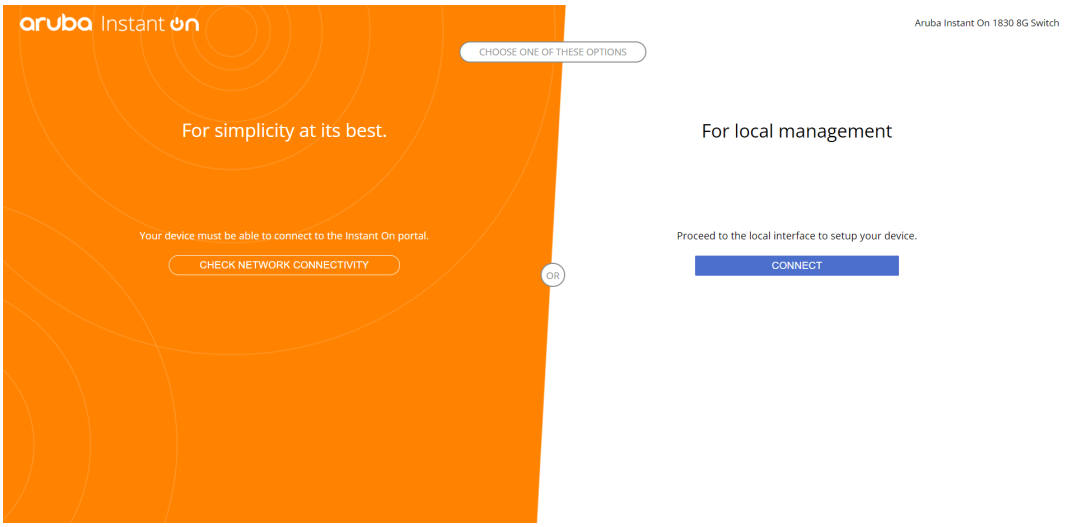

7. Enter the default username “admin” and click **Login** to start a switch Web-browser interface session. By default, there is no password.
8. To configure a password on the switch Web interface, click **Setup Network** > **User Management** and enter the **Current Password**. Define a **New Password** and reenter it in the **Confirm New Password** field. Passwords can be up to 64 alphanumeric and special characters in length, and are case sensitive.
9. Click **Apply** to implement the new password, and then click **Save Configuration** at the top of the browser configuration screen to save your settings and retain them when the switch is rebooted.

See the Aruba Instant On 1830 Switch Series Management and Configuration Guide for more switch configuration information.

> If you cannot remember the switch’s IP address or password, you can restore the factory default settings by following the procedure described in Restoring to Factory Defaults.

Using the 192.168.1.1 IP Address

If the switch does not acquire an IP address via the DHCP request, it defaults to the following configuration:

Parameter	Factory Default Setting
Username	admin
Password	<blank>
IP address	192.168.1.1
Subnet mask	255.255.255.0
Default gateway	not set

To communicate with the switch using the 192.168.1.1 address:

1. Connect a PC directly to any of the switch's network ports using a standard Ethernet cable.
2. Configure the PC's IP Address and Subnet Mask to allow it to communicate with the switch through your PC's Web browser.
3. Click **Use the following IP address**, and then, in the **IP address** and **Subnet mask** fields, type the IP address settings:

a. For **IP address**, enter an IP address in the same range as the switch's IP address, for example, enter **192.168.1.12**.

b. For **Subnet mask**, enter **255.255.255.0**, then click **OK**.

c. Click **Close** (or **OK**) to close the **Local Area Connection Properties** screen.

4. Open the Web browser on the PC, and enter the switch address, **http://192.168.1.1** to access the switch's Web interface.

Where to go from here

For more information on the local web interface and all the features that can be configured on the 1830 Switch Series, see the Aruba Instant On 1830 Switch Series Management and Configuration Guide.

For more information on using the Aruba Instant On Portal to manage the switch, see the Aruba Instant On User Guide.

Chapter 6
Troubleshooting

Troubleshooting Overview

This section describes how to troubleshoot the switch. For more information, see Aruba Instant On 1830 8G/24G/48G Switch Series Management and Configuration Guide.

This chapter describes the following:

- basic troubleshooting tips – Basic Troubleshooting Tips
- diagnosing with the LEDs – Diagnosing with the LEDs
- forgotten IP address or password – Restoring to Factory Defaults
- testing the switch by resetting it – Testing the Switch by resetting it
- Aruba Instant On Support Services

Basic Troubleshooting Tips

Common problems and their solutions are listed in the following table.

Problem	Resolution
Switch fails Power-On Self Test (POST)	Troubleshoot using the LEDs. See Diagnosing with the LEDs
Link light does not light when a cable is connected.	Look for loose or obviously faulty connections. If they appear to be OK, make sure the connections are snug. If that does not correct the problem, try a different cable.

Diagnosing with the LEDs

The first section shows LED patterns on the switch that indicate problem conditions for general switch operation troubleshooting.

The second section shows LED patterns that indicate problem conditions for PoE troubleshooting.

LED Patterns for General Switch Troubleshooting

Procedure

1. Check in the table below for the LED pattern you see on your switch.
2. Refer to the corresponding diagnostic tip on the next few pages.

Both Power and Fault are identified by the Global Status LED. See LEDs for more information.

LED Pattern Indicating Problems			Diagnostic Tips
Power	Fault	Port LED	
Off with power cord plugged in	*	*	❶
On	Prolonged On	*	❷
On	Blinking†	Blinking†	❸
On	Off	Off with cable connected	❹
* This LED is not important for the diagnosis. † The blinking behavior is an on/off cycle once every 1.6 seconds, approximately.			

Diagnostic Tips

Tip	Problem	Solution
❶	The switch is not plugged into an active AC power source, the switch's power adapter may have failed.	1. Verify the power cord is plugged into an active power source and to the switch. Make sure these connections are snug. 2. Try power cycling the switch by unplugging and plugging the power cord back in. 3. If the Power LED is still not on, verify that the AC power source works by plugging another device into the outlet. Or try plugging the switch into a different outlet or try a different power cord. If the power source and power cord are OK and this condition persists, the switch power supply may have failed. Call your Aruba authorized network reseller, or use the electronic support services from Aruba to get assistance.
❷	A switch hardware failure has occurred. All the LEDs will stay on indefinitely.	Try power cycling the switch. If the fault indication reoccurs, the switch may have failed. Call your Aruba authorized network reseller, or use the electronic support services from Aruba to get assistance.
❸	The network port for which the Link LED is blinking has experienced a self test or initialization failure.	Try power cycling the switch. If the fault indication reoccurs, the switch port may have failed. To confirm, try a different port that appears to be good. Call your Aruba authorized network reseller, or use the electronic support services from Aruba to get assistance. To verify that the port has failed, try removing and reinstalling the SFP without having to power off the switch. If the port fault indication reoccurs, you will have to replace the SFP.
❹	The network connection is not working properly.	Try the following procedures: ▪ For the indicated port, verify that both ends of the cabling, at the switch and the connected device, are secure. ▪ Verify the connected device and switch are both powered on and operating correctly. ▪ Verify that the connected devices comply with the appropriate IEEE 802.3 standard, including transmission of the Link signal. ▪ If the other procedures do not resolve the problem, try using a different port or a different cable.

LED Patterns for PoE Troubleshooting

Press the LED Mode button to put the switch into PoE mode and the port Mode LEDs will show which ports are experiencing the problem. The following tables identify the specific problems that are shown by the LEDs.

Procedure

1. Check in the table for the LED pattern you see on your switch.
2. Refer to the corresponding diagnostic tip.

LED Pattern Indicating Problems			Diagnostic Tips (see table below)
Global Status	Port Link	Port Mode(PoE)	
Off	Fast Blinking Orange	On Green	❶
Slow Blinking Orange	Slow Blinking Orange	On Orange	❷

Diagnostic Tips:

Tip	Problem	Solution
❶	PoE oversubscription condition. All available PoE power is already taken by higher-priority ports.	If possible add additional PoE power, or redefine port priorities.
❷	PoE hardware fault. A switch hardware component that is involved with PoE power delivery has failed.	The switch must be replaced.

Testing the Switch by resetting it

If you believe the switch is not operating correctly, you can reset the switch to test its circuitry and operating code. To reset the switch, unplug and plug in the power cord (power cycling).

Power cycling the switch will cause the switch to perform its power-on self test. Resetting the switch can also be invoked from the Web interface.

Resetting the switch can also be invoked by either, 1) Pressing the recessed front panel reset button with a blunt object for less than 5 seconds or, 2) via the web interface.

Restoring to Factory Defaults

If you forget the switch IP address or password, you can restore the factory default configuration by pressing the Reset button.

To execute the factory default reset on the switch, perform these steps:

Procedure

1. Using a small, thin tool with blunt ends (such as a paper clip), press the Reset button on the front of the switch.
2. Continue to press the Reset button until the UID LED light begins to flash.

3. Release the Reset button.

   The switch will then complete its self test and begin operating with its configuration restored to the factory default settings.

After completing this procedure, there will be no password, the IP address will be returned to the default 192.168.1.1, and all configuration settings will be returned to factory defaults.

Chapter 7
Specifications

Environmental Specifications

Table 1: *Environmental Specifications for all 1830 Switch Models*

Requirement	Value
Operating temperature	32°F to 104°F (0°C to 40°C)
Operating relative humidity	15% to 95%
Non-operating temperature	-40°F to 158°F (-40°C to 70°C) up to 15000 ft
Storage relative humidity	15% to 95%
Max operating altitude	10000 feet (3 km) Max
Max non-operating altitude	15000 feet (4.6 km) Max

Table 2: *1830 Switch Dimensions and Weights*

Switch	Dimensions (L x W x H)	Weight
Aruba Instant On 1830 8G Switch (JL810A)	6.18" x 6.8" x 1.53" (15.7 x 17.28 x 3.9 cm)	1.7 lb (0.77 kg)
Aruba Instant On 1830 8G 4p Class4 PoE 65W Switch (JL811A)	7.68" x 9.64" x 1.73" (19.5 x 24.5 x 4.39 cm)	3.4 lb (1.54 kg)
Aruba Instant On 1830 24G 2SFP Switch (JL812A)	8.5" x 17.44" x 1.73" (21.59 x 44.3 x 4.39 cm)	5.5 lb (2.49 kg)
Aruba Instant On 1830 24G 12p Class4 PoE 2SFP 195W Switch (JL813A)	9.8" x 17.44" x 1.73" (24.5 x 44.25 x 4.39 cm)	7.65 lb (3.47 kg)
Aruba Instant On 1830 48G 4SFP Switch (JL814A)	9.8" x 17.44" x 1.73" (24.5 x 44.25 x 4.39 cm)	7.8 lb (3.54 kg)
Aruba Instant On 1830 48G 24p Class4 PoE 4SFP 370W Switch (JL815A)	13.82" x 17.44" x 1.73" (35.1 x 44.25 x 4.39 cm)	10.90 lb (4.94 kg)

Acoustics

Acoustics measured in 23°C semi-anechoic chamber with a loading of 100% traffic and (for JL813A and JL815A) 50% PoE on all ports. Measured in accordance with ISO 7779. Declared in accordance with ECMA-109:2010. Values presented are the Declared A-Weighted Sound Power Level (LWAd) and the mean Bystander A-Weighted Sound Pressure Level (LpAm).

Table 3: *Noise Emissions per Switch Model*

Switch Model	Noise Emission
Aruba Instant On 1830 8G Switch (JL810A)	Power: 0 dB no fan
Aruba Instant On 1830 8G 4p Class4 PoE 65W Switch (JL811A)	Power: 0 dB no fan
Aruba Instant On 1830 24G 2SFP Switch (JL812A)	Power: 0 dB no fan
Aruba Instant On 1830 24G 12p Class4 PoE 2SFP 195W Switch (JL813A)	Pressure: 17 dB Power: 3.1 Bel
Aruba Instant On 1830 48G 4SFP Switch (JL814A)	Pressure: 19 dB Power: 3.4 Bel
Aruba Instant On 1830 48G 24p Class4 PoE 4SFP 370W Switch (JL815A)	Power: 25 dB Power: 4.0 Bel

Standards

		Laser Safety Information	
Technology	Compatible with these IEEE Standards	EN/IEC Standard Compliance	SFP Lasers
10-T 100-TX 1000-T	IEEE 802.3 10BASE-T IEEE 802.3u 100BASE-TX IEEE 802.3ab 1000BASE-T		
1000-SX	IEEE 802.3z 1000BASE-SX	EN/IEC 60825	Class 1 Laser Product Laser Klasse 1
1000-LX	IEEE 802.3z 1000BASE-LX	EN/IEC 60825	Class 1 Laser Product Laser Klasse 1

Cabling and Technology Information Specifications

Table 4: *Cable Information*

Cable Type	OperationMode	Description
Twisted-pair copper	10 Mbps Operation	Category 3, 4 or 5, 100-ohm unshielded twisted-pair (UTP) or shielded twisted-pair (STP) cable, complying with IEEE 802.3 10BASE-T specifications.
	100 Mbps Operation	Category 5, 100-ohm UTP or STP cable, complying with IEEE 802.3u 100BASE-TX specifications.
	1000 Mbps Operation	Category 5, 100-ohm 4-pair UTP or STP cable, complying with IEEE 802.3ab 1000BASE-T specifications—Category 5e or better is recommended. See note on 1000BASE-T Cable Requirements below.
Multimode fiber		62.5/125 µm or 50/125 µm (core/cladding) diameter, low metal content, graded index fiber-optic cables, complying with theITU-T G.651 and ISO/IEC 793-2 Type A1b or A1a standards respectively.*
Single mode fiber		9/125 µm (core/cladding) diameter, low metal content fiber-optic cables, complying with the ITU-T G.652 and ISO/IEC 793-2 Type B1 standards.

*A mode conditioning patch cord may be needed for some Gigabit-LX installations.

Note on 1000BASE-T Cable Requirements. The Category 5 networking cables that work for 100BASE-TX connections should also work for 1000BASE-T, as long as all four-pairs are connected. But, for the most robust connections, you should use cabling that complies with the Category 5e specifications, as described in Addendum 5 to the TIA-568-A standard (ANSI/TIA/EIA-568-A-5).

Because of the increased speed provided by 1000BASE-T (Gigabit-T), network cable quality is more important than for either 10BASE-T or 100BASE-TX. Cabling plants being used to carry 1000BASE-T networking must comply with the IEEE 802.3ab standards. In particular, the cabling must pass tests for Attenuation, Near-End Crosstalk (NEXT), and Far-End Crosstalk (FEXT). Additionally, unlike the cables for 100BASE-TX, the 1000BASE-T cables must pass tests for Equal-Level Far-End Crosstalk (ELFEXT) and Return Loss.

When testing your cabling, be sure to include the patch cables that connect the switch and other end devices to the patch panels on your site. The patch cables are frequently overlooked when testing cable and they must also comply with the cabling standards.

Table 5: *Technology Distance Specifications*

Technology	Supported Cable Type	Multimode Fibermodal Bandwidth	Supported Distances
1000-T	twisted-pair copper	N/A	up to 100 meters
1000-SX	multimode fiber	160 MHz*km 200 MHz*km 400 MHz*km 500 MHz*km	2 - 220 meters 2 - 275 meters 2 - 500 meters 2 - 550 meters
1000-LX	multimode fiber	400 MHz*km 500 MHz*km	2 - 550 meters 2 - 550 meters
	single mode fiber	N/A	2 - 10,000 meters

Chapter 8
Support Information

Main Instant On site

https://www.arubainstanton.com/

Support

https://support.arubainstanton.com/

Instant On social forums and knowledge base

https://community.arubainstanton.com/

Security bulletins

https://www.arubanetworks.com/support-services/security-bulletins/

End-user license agreement

https://www.arubainstanton.com/eula/

Support contact numbers

https://www.arubainstanton.com/contact-support/