CHIHUAHUA S & ST

Installation Instructions



Required Tools & Accessories

Drill and 0.1 IN Drill Bit
Phillips Screwdriver
1 IN Hole Saw
SMA Wrench

Mounting Instructions

Antenna Mounting Location Directions

When selecting the location of an antenna, consider the following factors:

1. **Conductive Panel –** The ground plane is a part of the antenna. If no ground plane/metal surface is used, the antenna may radiate in undesirable locations and may also result in bad return loss and poor efficiency.

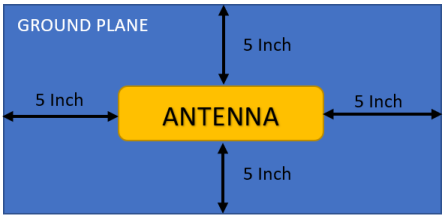

Parsec suggests using a **20" x 20" ground plane for all our mobile antennas** (PTA0587) for best performance. If this much space is not available, use a ground plane/metal surface large enough such that it is at least 5 inches from each side of the antenna.

2. **Antenna Directionality** – the direction of the signal is limited by the directionality of the antenna.
Omni-directional antennas provide a 360-degree horizontal radiation pattern, allowing for coverage in all directions horizontally with varying degrees of vertical coverage.
When selecting the location of an omni-directional antenna, ensure that the antenna can be mounted in the proper orientation relative to the horizontal plane.

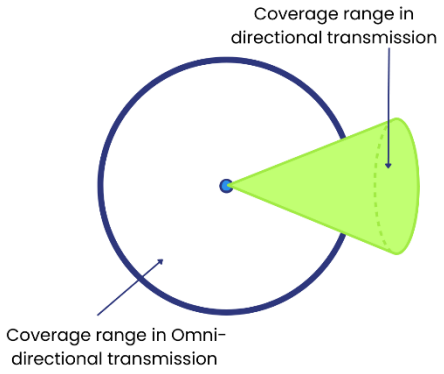

3. **Signal Path Loss** – signal strength is greatly affected by the materials that the signal passes through.
Severe signal loss can be caused by concrete and brick walls. Metals can absorb and/or reflect the signal, affecting the signal path. **For best antenna performance, select an antenna location with minimal obstructions between the antenna and the signal source(s).**
4. **Reflection & Diffraction** – the signal will bounce off certain materials and bend around obstacles. For best antenna performance, the antenna should be installed in a location where the signal path is not interfered with by materials like Low E glass, Metal, Tinted glass, etc., that reflect RF Energy.

5. **Interference** – electrical devices and appliances interfere with the antenna's signal.
   Electrical devices and appliances, such as refrigerators, microwaves, AC units, and cameras, can cause electromagnetic interference with the antenna signal.
   Select a location that is as far as possible from electrical devices and appliances and minimizes the amount of such devices between the antenna and the signal source(s). For best antenna performance, install antennas as far away as possible from each other and other devices. In general, separate antennas by at least 24 inches (61 cm).

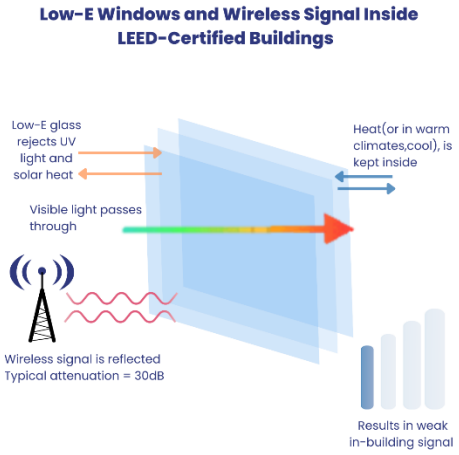

6. **Cable Loss** – signal strength is lost as RF waves travel through cables.
   The longer the cable, the more electrical energy is lost as heat and the higher the signal loss. **Therefore, it is best to select a location for the antenna that allows the cables to be as short as possible and still reach the router.**
   The size of the cable also affects cable loss; coaxial cables with higher center conductor diameters have less cable loss compared to thinner coaxial cables.
   It is critical to avoid bending coaxial cables sharply to avoid shearing of the Aluminum foil shield, which can result in a significant or complete loss of antenna functionality.
   Coaxial cables should not be bent sharply; they have a minimum bend radius which varies depending on the size of cable.

Hardware Accessories

Accessory	*Part Number*
Pole Mount Bracket Assembly, 1" Hole	PTA0149
Pole Mount Bracket, Horizontal Truss Mounting	PTA0149-F
Pole Mount Bracket, Marine Grade, White	PTA0149-MG-W
Mini Pole Mount Bracket Assembly	PTA0637
L Bracket, Antenna Mount Assembly	PTA0756
Replacement Rooftop Gasket	PTA0098
Hardware Kit for 1" Shaft - Nut/Washer	PTA0760
1" Star Washer	PTA0251
Ground plane with adhesive back, 20in x 20in, can be cut to size	PTA0587
Lightning Arrestor – SMA(F) to SMA(F)	PTA0476
Lightning Arrestor – N(F) to N(M)	PTA0736
SMA Wrench, Key Chain	PTA0194
Service: Cable Sleeving (Priced Per Ft)	Cable Sleeving

*Lightning Arrestors are recommended for outdoor installations

Roof Mounting Instructions

Preparing the Hole

1. After selecting the location to mount the Antenna, mask the mounting location to avoid paint damage. Mark the hole center with ink or scribed cross hairs.
2. Use a center punch to make a dimple on the marked location to avoid drill bits from walking across the sheet metal. Use a Twist drill of diameter about 0.1" and drill a pilot hole. Using a 1.0" diameter sheet metal hole saw, drill the hole.
3. The hole saw will cut the required diameter hole with less risk of stretching and distorting the vehicle surface.
4. Clean up any metal shavings around the mounting location.

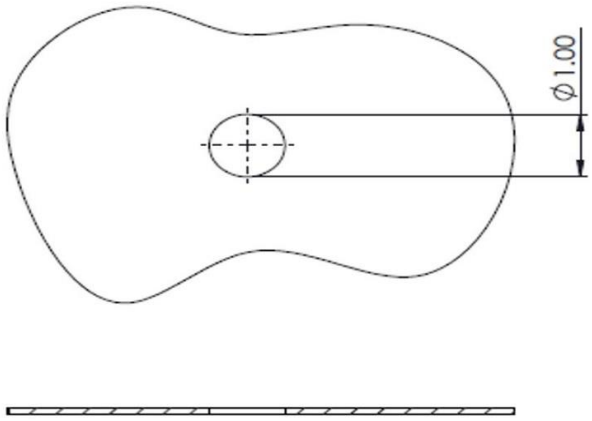

Mounting the Antenna

1. Feed the coaxial cables from the antenna through the hole from the outside surface to the inside surface and thread the entire length of the cable through the hole.
2. Clean debris off the vehicle surface and then mark the desired antenna orientation by placing the antenna flat on the vehicle surface.

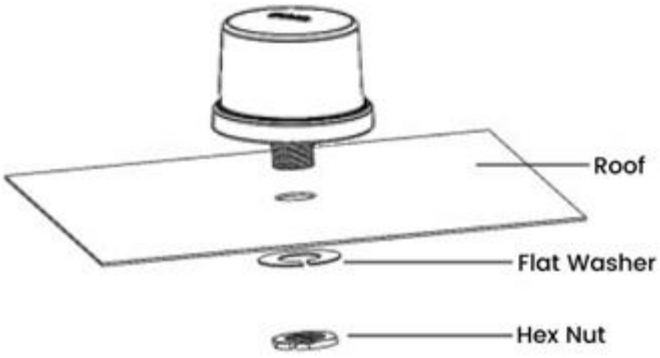

3. Lift the antenna and remove the protective backing from the underside of the antenna and place the antenna back in the desired position. Apply downward pressure on the antenna to stick it to the panel. This step is optional if you plan to mount the antenna magnetically.
4. To avoid the gap between the antenna and panel, it is recommended to use neutral cure silicon sealant around the base of the mounting boot to fully compress the antenna to the mounting panel.
5. A split flat washer and a split hex nut are provided in the kit for easy installation.
6. On the inside of the vehicle, thread the flat washer over the cable, followed by the PTA0251 star washer (if applicable) and then hex nut.
7. Slide the washers and nut to the threaded flange of the antenna and tighten the hex nut until antenna compresses flat with the surface of the vehicle.

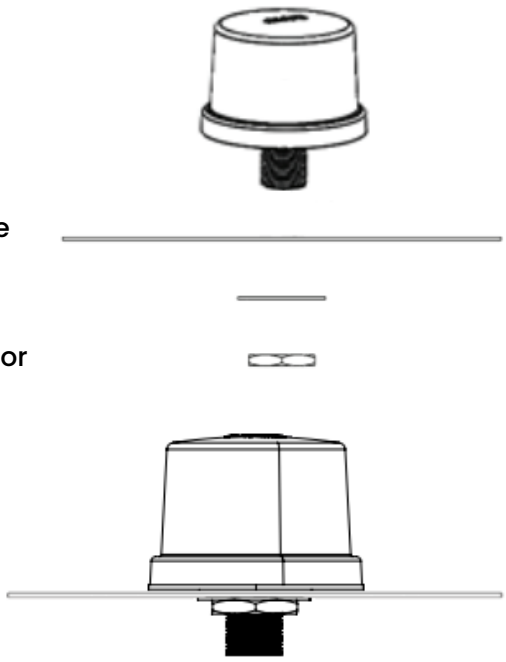

Pole Mounting Instructions

Mounting the Pole Mount Bracket on the Pole

1. Select the mounting location on a vertical pole.
    A. To avoid de-tuning or interference issues, install the antenna as far away as possible from other devices (minimum 24 inches), including lights, AC units, routers, and other antennas.
    B. Select a mounting location on a pole with a diameter between 2.5" and 3.5". Ensure that the pole is vertical, stable, and rigid.
2. Remove the flat washer and hex nut from the antenna shaft.
3. Install the pole mount bracket onto the pole.
    A. Guide the provided hose clamps through the slots in the pole mount brackets and around the pole, as shown below. Tighten the hose clamps around the pole.

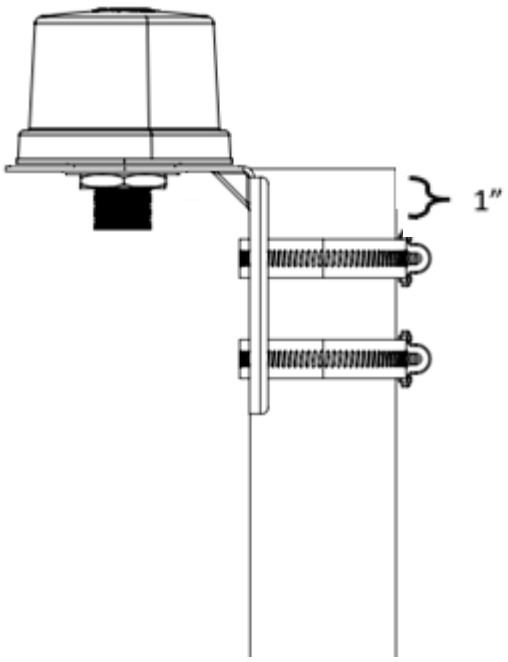

Mounting the Antenna

1. Feed the coaxial cables from the antenna through the hole from the outside surface to the inside surface and thread the entire length of the cable through the hole.
2. Feed the antenna cables through the hole in the pole mount bracket.
3. Adhere the antenna to the mounting surface.
    A. Remove the backing from the adhesive pad on the base of the antenna.
    B. Carefully place the antenna onto the pole mount bracket, inserting the antenna shaft into the hole.
    C. Apply pressure on the antenna to ensure strong adhesion.
4. Fasten the antenna to the pole mount bracket.
    A. Guide the provided flat washer and hex nut onto the antenna cables. Using a star or lock washer is optional and not provided.
    B. Thread the flat washer, PTA0251 star washer (if applicable), and hex nut onto the antenna shaft.

Routing the Cables

1. Route the cables from the antenna to the router, maintaining a minimum bend radius of 1.5” for the cable bundle. Avoid sharp bends. Run the cables adjacent to existing wiring.
2. Waterproof the RF connectors using electrical tape or heat shrink tube, if required.

Cable Connection Instructions

1. Use a canned air and/ or isopropyl alcohol to clean all the connectors to ensure that there Is no dust in the terminals.
2. Connect the antenna cables to the router. Use the table below for reference; different routers may have different terminal names. Use a 5/16” wrench to carefully tighten the connectors on the cables to the router terminals. It is recommended to use a 5 in.-lb. torque wrench to prevent overtightening.

Note: Do not apply more than 5 in.-lbs. of torque to SMA Connectors.
Note: Do not apply more than 9.7 in.-lbs. of torque to N Connectors.

S. No	Cable from Antenna	Connector on Router
1.	CELL 1	MAIN 0
2.	CELL 2	AUX 0
3.	Wi-Fi 1	2.4/5GHz
4.	Wi-Fi 2	2.4/5GHz
5.	Wi-Fi 3	2.4/5GHz
6.	GPS	GNSS

Commission and Testing

Check each coaxial cable connector and confirm that it cannot be easily loosened. Visually inspect the coaxial cables to ensure that they are not sharply bent and are sufficiently secured and supported between the antenna and the router.

Use a cellular device's built-in diagnostics to confirm the RSSI is higher than -75dB. Confirm the cellular connection supports communications at required data rates.

Connect the GPS/GNNS cable to the GPS/GNNS receiver and check for satellite acquisition.

Connect the cellular/LTE & WLAN/Wi-Fi cables to the router and stow any unused coaxial cables to avoid damage.



CAUTION
To comply with FCC RF Exposure requirements in section 1.1310 of the FCC Rules, antennas used with this device must be installed to provide a separation distance of at least 20 cm from all persons to satisfy RF exposure compliance.



DO NOT
- Operate the transmitter when someone is within 20 cm of the antenna
- Install the antenna or mast assembly on a windy day
- Install the mast close to power lines as it can cause serious injuries or death



WARNING
Watch out for overhead power lines. Check the distance to power lines before beginning installation.



WARNING
This document gives detailed instructions to install an antenna to the best of our knowledge. This document is for general information only. It cannot be used for a warranty. Parsec Technologies Inc. will not accept any liability for any damage caused by an antenna due to unknown variables.

Parsec Technologies
972-804-4600
support@parsec-t.com

Last Revised: 08.07.23