Enhancing Consumer NAS Performance with the SANDISK® NAS 600 SATA SSD Caching

Executive Summary

Consumer Network Attached Storage (NAS) have become a popular storage solution with small/medium businesses, creative professionals, and prosumers. With the trend of massive data growth along with integration of agentic AI media management, consumer NAS solutions equipped primarily with HDDs may not be able to keep up. This can lead to a slowdown in speeds when accessing data or project files, especially in growing multi-user collaborative environments.

Configuring Caching in a NAS

Adding SATA SSDs as a cache to a NAS can boost responsiveness for many workload types like file sharing, virtual machines, databases, and agentic AI data management, while maintaining the large volumes of HDDs. SATA SSDs are designed to handle high volume of random I/O traffic and provide low-latency access to data, while HDDs handle sequential transfers and bulk storage. This hybrid approach can help improve existing NAS deployments without the need to invest in new NAS infrastructure.

Adding an SSD cache to a NAS can be easy and is supported by many leading NAS solutions. Typically, it includes adding 1 or 2 SATA SSDs to available open drive bays and configuring the SSDs as either standalone read cache (1 SSD) or a read/write cache (2 SSDs in RAID-0 or RAID-1) as seen in Figure 1. For a read cache configuration, frequently accessed or "hot" data is dynamically copied into the SSD cache, where end-user or application read requests come directly from the SSDs instead of the HDDs. For writes, they go directly to the HDDs. The benefit here is that only 1 SSD and bay is required. However, the optimal solution for majority of applications and use-cases is to configure 2 SSDs as a read/write cache. For this configuration, data is read and written to fast SATA SSDs prior to copying back to HDDs helping boost responsiveness for data accesses and workloads. When configuring as a read-write cache, it is recommended to ensure your NAS is connected to a functioning Uninterruptible Power Supply (UPS). While RAID-1 helps protect against a single-drive failure, it does not protect against data loss resulting from an unexpected power loss before data is written to the HDDs.

SATA SSDs for Caching

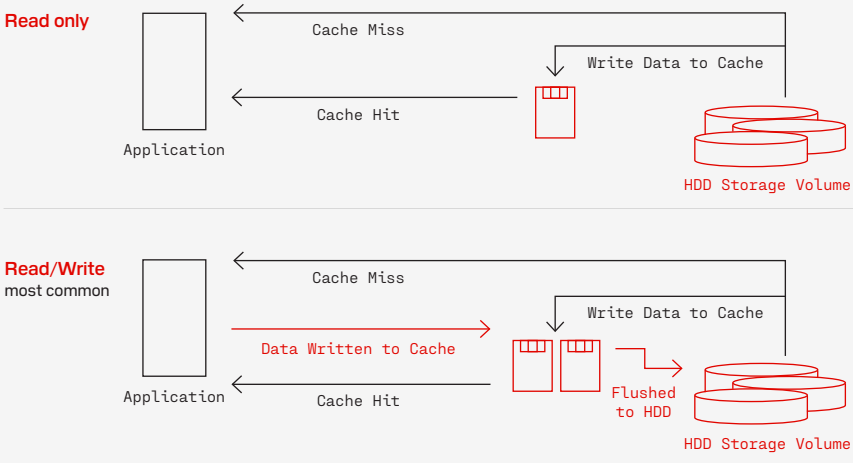

Recommended Storage HW

Read Cache:
At least 1 SSD

Read + Write Cache:
2 SSDs (RAID 1) "Mirrored"

How to choose the right SSDs

Choosing the right SSDs for caching and for the expected workload is important to the SSD's performance and long-term reliability. SSDs deployed for NAS caching should provide consistent high performance under heavy demands such collaborative multiuser environments or creative professional deployments. When configured also as a read/write cache, the SSD's endurance capabilities are critical for the SSD to endure wear from heavy writes such as constant metadata updates and burst writes from video editors. Therefore, SSDs should have a high endurance rating which many consumer SSDs lack. Lastly, SSDs should be tested for NAS compatibility, performance, and durability to ensure longevity during its lifespan.

When choosing the amount of SSD cache, cache size is dependent on the workload and can be between 2.5% to 10% of the HDD storage pool. For example, if the HDD storage pool is 80TB[1], then consider 5% or 4TB[1] to be the recommended size. For a prosumer, the size could be determined by the typical application dataset size such as media asset file sizes. For a read/write cache in RAID 1, this would include two 4TB[1] SSDs.

The SANDISK® NAS 600 SATA SSD is a purpose-built SSD for 24/7 NAS operation as a cache, storage tier, or all-flash when replacing HDDs. Since your NAS system is always on, reliability is critical. This SSD can reinvigorate consumer NAS I/O performance and responsiveness when configured as a cache, as it's designed for continuous operation in 24x7 NAS environments with reliability of up to 2.25M hours MTTF[2] and a high write endurance rating of 2,500 TBW[3] (4TB[1] model). You can scale your cache with your data growth with available capacities from 500GB[1] to 4TB[1]. And, since this SSD is designed for a 2.5"/7mm case, most NAS 3.5" bays can easily accommodate making, adding, and configuring an SSD cache as easy as possible. The SANDISK® NAS 600 SATA SSD is ideal as a cache for multi-user SMB environments, collaborative editing, and prosumers. Plus, besides being purpose-built, enjoy Sandisk's 5-year limited warranty for extra peace of mind.[4]



Benchmarking

As NAS workloads varies depending on use-case, we configured a read/write cache using 2x SANDISK® NAS 600 4TB1 in RAID 1 and ran a typical storage benchmark consisting of sequential and random transfers.

READ/WRITE CACHE IMPROVEMENTS

110% faster sequential reads (MB/s)[2]
73% faster sequential writes (MB/s)[2]
6x faster random reads (IOPS)[2]
6x faster random writes (IOPS)[2]

With these results, adding and configuring a read/write SSD cache within a traditional NAS cache may significantly improve performance for heavy video editing applications, virtualization, and databases along with responsiveness in multiuser environments.

SSD Cache Accelerate NAS Workloads

Random Performance

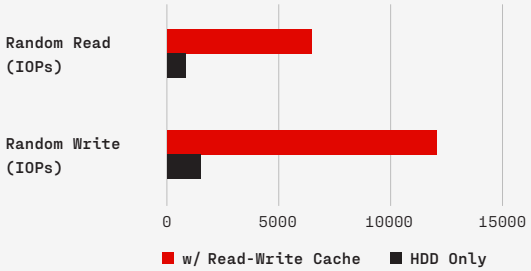

Sequential Performance

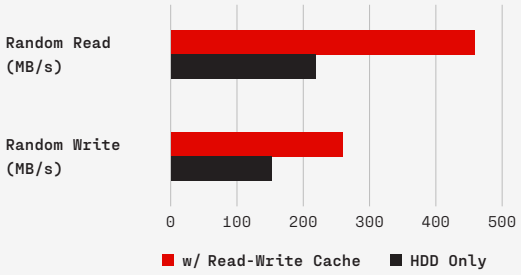

Upgrade performance and responsiveness with the SANDISK® NAS 600 SATA SSD

6x Random Reads	6x Random Writes
+110% Sequential Reads	+73% Sequential Writes

Test setup: UGREEN DXP4800 Pro NAS, 2x 4TB SANDISK NAS 600 SATA SSDs, RAID 1 read/write cache. Results based on internal testing. Actual performance may vary.

For most prosumer and SMB end users with various applications, workflows, and datasets, adding and configuring an SSD read/write cache can improve storage performance when high network speeds are available. Adding SANDISK® NAS 600 SATA SSDs offer excellent ROI for end-users without the need to purchase additional equipment and data migration.

1GB = 1 billion bytes, 1TB = 1 trillion bytes, and 1PB = 1 quadrillion bytes. Actual user capacity may be less depending on operating environment.

1MB/s = 1 million bytes per second. IOPS = input/output operations per second. Based on internal testing; performance may vary depending upon host device, usage conditions, drive capacity, and other factors.

TBW (terabytes written) and/or PBW (petabytes written) values calculated using JEDEC client workload (JESD219) and vary by product capacity. MTTF = Mean Time To Failure based on internal testing using Telcordia™ stress part testing (Telcordia SR-332, GF, 25°C). MTTF is based on a sample population and is estimated by statistical measurements and acceleration algorithms. MTTF does not predict an individual drive's reliability and does not constitute a warranty.

See www.sandisk.com/support for additional details.

SANDISK and the SANDISK logo are registered trademarks or trademarks of Sandisk Corporation or its affiliates in the US and/or other countries. Intel Core and Thunderbolt are trademarks of Intel Corporation or its subsidiaries. The NVMe word mark is a trademark of NVM Express, Inc. PCIe® is a registered trademark of PCI-SIG. UGREEN is a trademark of UGREEN Group Limited or its affiliates. All other marks are the property of their respective owners.

© 2026 Sandisk Corporation or its affiliates. All rights reserved.

951 SANDISK DRIVE
MILPITAS, CA 95035, USA
WWW.SANDISK.COM