Dell Unity™ All Flash and Unity Hybrid Unity 480/F, Unity 680/F, Unity 880/F Installation and Service Guide

Part Number: 302-005-519
August 2026
Rev. 07

DELL Technologies

Notes, cautions, and warnings

NOTE: A NOTE indicates important information that helps you make better use of your product.

CAUTION: A CAUTION indicates either potential damage to hardware or loss of data and tells you how to avoid the problem.

WARNING: A WARNING indicates a potential for property damage, personal injury, or death.

Copyright © Dell Inc. All Rights Reserved. Dell Technologies, Dell, and other trademarks are trademarks of Dell Inc. or its subsidiaries. Other trademarks may be trademarks of their respective owners.

Contents

Additional resources....7

Chapter 1: Installation Procedures....8
Before you begin....8
Installation workflow including optional DAEs....8
Site and equipment preparation....9
Unpack the DPE....10
Record the product serial number from the DPE....11
Install the rails in the cabinet....11
Install the DPE on the rails....12
Secure the system in the cabinet....15
Attach the storage processors to the network....15
Install optional DAEs....15
Connect power to the DPE....16
Power up optional DAEs....16
Verify status LEDs....16
Installing the front bezel....18
Connect a Windows-based system to your storage system....19
Automatically assigning a dynamic storage system management port IP address....19
Manually assigning a static storage system management port IP address....20
Download and install the Connection Utility software....20
Run the Connection Utility....20
Unpack the (optional) disk-array enclosures....21
15-drive DAE container contents....22
25-drive DAE container contents....23
Install the disk array enclosure....24
Install 15-drive DAE....24
Install 25-drive DAE....27
Cabling the DPE to a DAE....30
Cabling the first optional DAE to create backend bus 1....31
Cabling the second optional DAE to create backend bus 0....32
Cabling an expansion DAE to an existing DAE to extend a backend bus....32
Connecting power to the DAE....33

Chapter 2: Service Procedures....35
Replace a faulted drive in the DPE....35
Identifying and locating the faulted part in Unisphere....35
Remove a faulted 2.5" drive....35
Install a 2.5" drive....36
Verifying the operation of the new part in Unisphere....37
Returning a faulted part....37
Add a new drive in the DPE....37
Removing the front bezel....37
Remove a drive filler module....37
Install a 2.5" SAS or SAS Flash drive....38

Verifying the operation of the new part in Unisphere....39
Replace a power supply....39
Identifying and locating the faulted part in Unisphere....39
DPE power supply LEDs....40
Remove a power supply....40
Install a power supply....41
Verifying the operation of the new part in Unisphere....42
Returning a faulted part....42
Replace an embedded module....42
Identifying and locating the faulted part in Unisphere....43
Place SP A into Reset and Hold....43
Embedded module LEDs....43
Remove a faulted embedded module....44
Transfer the 4-port card....46
Install an embedded module....47
Rebooting a SP assembly into Normal Mode....48
Verifying the operation of the new part in Unisphere....49
Add a 4-port card....49
Add a 4-port card to SP A....49
Adding the 4-port card to SP B....53
Committing the new I/O ports....54
Verifying the operation of the new part in Unisphere....54
Replace a 4-port card....54
Identifying and locating the faulted part in Unisphere....54
Place SP A into Reset and Hold....54
Embedded module LEDs....55
Remove an embedded module....56
Remove a 4-port card....57
Install a 4-port card....58
Install an embedded module....59
Rebooting a SP assembly into Normal Mode....60
Verifying the operation of the new part in Unisphere....61
Add an SFP....61
Install an SFP module....61
Committing the new I/O ports....61
Verifying the operation of the new part in Unisphere....62
Replace a faulted SFP....62
Identifying and locating the faulted part in Unisphere....62
Remove an SFP module....62
Install an SFP module....63
Verifying the operation of the new part in Unisphere....63
Returning a faulted part....63
Replace an I/O module....64
Identifying and locating the faulted part in Unisphere....64
Place SP A into Reset and Hold....64
Base enclosure 4-port I/O module LEDs....65
Remove a faulted I/O module....65
Install an I/O module....66
Rebooting a SP assembly into Normal Mode....67
Verifying the operation of the new part in Unisphere....67

Returning a faulted part....67
Add an I/O module....67
Locating a slot for a new I/O module....68
Remove a filler I/O module....68
Install an I/O module....68
Verifying that the new I/O ports are recognized....69
Adding the I/O module to SP B....69
Committing the new I/O ports....69
Replace a fan module....69
Identifying and locating the faulted part in Unisphere....70
Preparing the storage processor (SP) for service....70
Remove the SP assembly....71
Remove the top cover from the SP assembly....72
Remove the fan module....73
Install the fan module....74
Install the top cover on the SP assembly....75
Install the SP assembly....76
Rebooting an SP assembly into Normal Mode....77
Verifying the operation of the new part in Unisphere....77
Returning a faulted part....78
Replace a dual inline memory module (DIMM)....78
Identifying and locating the faulted part in Unisphere....78
Preparing the storage processor (SP) for service....78
Remove the SP assembly....79
Remove the top cover from the SP assembly....81
Remove the faulted dual inline memory module....82
Install the dual inline memory module....83
Install the top cover on the SP assembly....83
Install the SP assembly....84
Rebooting an SP assembly into Normal Mode....85
Verifying the operation of the new part in Unisphere....86
Returning a faulted part....86
Replace an M.2 SSD....86
Identifying and locating the faulted part in Unisphere....86
Preparing the storage processor (SP) for service....87
Remove the SP assembly....88
Remove the top cover from the SP assembly....89
Remove the faulted M.2 SSD....90
Install the M.2 SSD....91
Install the top cover on the SP assembly....92
Install the SP assembly....93
Rebooting an SP assembly into Normal Mode....94
Verifying the operation of the new part in Unisphere....95
Returning a faulted part....95
Replace an SP assembly....95
Identifying and locating the faulted part in Unisphere....95
Preparing the storage processor (SP) for service....96
Remove the SP assembly....97
Remove the top cover from the SP assembly....98
Transfer parts from the faulted SP assembly to the replacement SP assembly....99

Install the top cover on the SP assembly 102
Install the SP assembly 103
Rebooting an SP assembly into Normal Mode 104
Verifying the operation of the new part in Unisphere 104
Returning a faulted part 105

Appendix A: Configuration Worksheet 106
Configuration worksheet 106

Appendix B: Safety precautions for handling replaceable units 109
Handling replaceable units 109
Avoiding electrostatic discharge (ESD) damage 109
Emergency procedures (without an electrostatic discharge kit) 109
Hardware acclimation times 110
Removing, installing, or storing replaceable units 110
Unpacking a part 111
Standard touch point colors 111

Additional resources

As part of an improvement effort, revisions of the software and hardware are periodically released. Therefore, some functions that are described in this document might not be supported by all versions of the software or hardware currently in use. The product release notes provide the most up-to-date information about product features. Contact your technical support professional if a product does not function properly or does not function as described in this document.

Where to get help

Support, product, and licensing information can be obtained as described below.

Product information

For product and feature documentation or release notes, go to Unity Technical Documentation at the Dell Unity Info Hub.

Troubleshooting

For information about products, software updates, licensing, and service, go to Dell Support (registration required). After logging in, locate the appropriate product page.

1

Installation Procedures

This chapter describes how to install the system.

NOTE: Review the information in Safety precautions for handling replaceable units before handling replaceable parts.

Topics:

- Before you begin
- Installation workflow including optional DAEs
- Site and equipment preparation
- Unpack the DPE
- Record the product serial number from the DPE
- Install the rails in the cabinet
- Install the DPE on the rails
- Secure the system in the cabinet
- Attach the storage processors to the network
- Install optional DAEs
- Connect power to the DPE
- Verify status LEDs
- Installing the front bezel
- Connect a Windows-based system to your storage system
- Automatically assigning a dynamic storage system management port IP address
- Manually assigning a static storage system management port IP address
- Unpack the (optional) disk-array enclosures
- Install the disk array enclosure
- Cabling the DPE to a DAE
- Cabling the first optional DAE to create backend bus 1
- Cabling the second optional DAE to create backend bus 0
- Cabling an expansion DAE to an existing DAE to extend a backend bus
- Connecting power to the DAE

Before you begin

Steps

1. Set up a product support account.

   If you do not already have a product support account, go to Dell Support to set one up. You need a support account to access the latest troubleshooting information, online chat, installation and maintenance videos, utilities and wizards.
2. Complete the *Configuration Worksheet*.

   The *Configuration Worksheet* is available for download from Dell Support. Configuration worksheet information is also included in the Configuration Worksheet.

Installation workflow including optional DAEs

Use the following documents and software and sequence of actions as a guide to install the storage system:

1. Use the *Quick Start Guide* or this guide and the *Unity Hardware Information Guide* to:
   a. Prepare the site for installation.
   b. Unpack the storage system.
   c. Rack and install the storage system.

d. Cable the system components.
e. Power up the system components.
f. Use the Connection Utility (CU) to discover and configure the system management IP address for network management.
g. Launch a browser, log in to the system, and follow the Unisphere Initial Configuration Wizard tasks to complete the initial system configuration.

2. Use Unisphere to:
   a. Complete the Initial Configuration Wizard tasks:
      - Accept License Agreement and Configure User Credentials
      - Install License File
      - Configure Network Services (DNS/NTP)
      - Configure FAST Cache and Pools (optional)
      - Configure Alerts (optional)
      - Configure Support Credentials, Customer Contact Information, and Dell Secure Remote Services (recommended)
      - Configure iSCSI Interfaces (optional)
      - Set up a NAS Server (optional)
   b. Enable SSH under **Service** > **Service Tasks** (recommended for remote support)
   c. Update system software under **Settings** > **Software and Licenses** (as required)
   d. Configure Block and File resources, and Hosts (as required)
3. Use this guide and the *Hardware Information Guide* to:
   a. Rack and install optional DAEs
   b. Cable the optional DAEs
   c. Power up the optional DAEs
   d. Configure extra Block and File resources, and Hosts (as required)

Site and equipment preparation

The following items are required for installation.

Tools: ESD protection kit, slotted or Phillips screwdriver (optional), and a mechanical lift (optional).

Management console: A Windows-based computer to run the initialization, maintenance, and management tools with:

- At least 100 MB of free space
- Connection on same LAN subnet as your storage system (recommended)
- Web browser (Internet Explorer, Mozilla Firefox, Google Chrome)

NOTE: Refer to the Unity Support Matrix on the support website for compatibility and interoperability information related to the Web browsers.

Space: Cabinet vertical space of 2U (3.5 inches, 8.9 cm) for the disk processor enclosure (DPE), and if applicable, the following cabinet space for each DAE:

- 2U, 25-drive DAE (3.4 inches, 8.63 cm)
- 3U, 15-drive DAE (5.75 inches, 14.6 cm)

NOTE: It is recommended that you include 36 inches of clearance in front of and behind the rack to avoid a system shutdown if maintenance or service activities are required.

Network connections: The following I/O modules and embedded modules are available for network connectivity.

- 4-port 32Gb Fibre Channel I/O module
- 4-port 16Gb Fibre Channel I/O module
- 4-port 25GbE Optical I/O module
- 4-port 10GbE BaseT I/O module
- 4-port 12Gb SAS backend I/O module
- 10GbE BaseT 4-port card
- 25GbE 4-port card

Network information:

- DNS and NTP servers accessible from the storage system (recommended)
- Windows Domain Controller (recommended)

- SMTP server network connection to the storage system and the management host (optional)
- If you are using the Connection Utility, the management port and login information required includes:
  - A static IP address for the system
  - The subnet mask of the LAN to which the system is connected
  - The default gateway address of the LAN to which the system is connected
  - Passwords for system users admin and service
- If you are setting up the system on a network with DHCP servers, DNS servers, and Dynamic DNS services, you need:
  - The system serial number
  - Domain information

Unpack the DPE

The disk processor enclosure (DPE) is a 2U component with 25 2.5" drive slots. Verify that you have received all the DPE components, including cables, bezel, and rail kit.

Table 1. DPE components

Component	Image
2U, 25-drive disk processor enclosure (DPE)	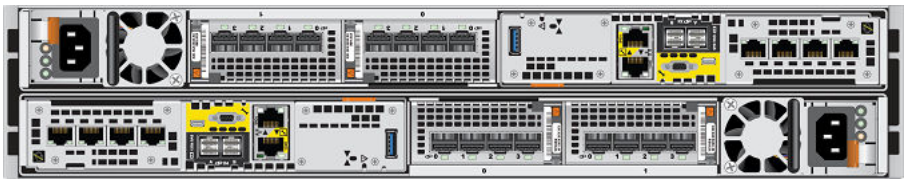
Tool-less rails	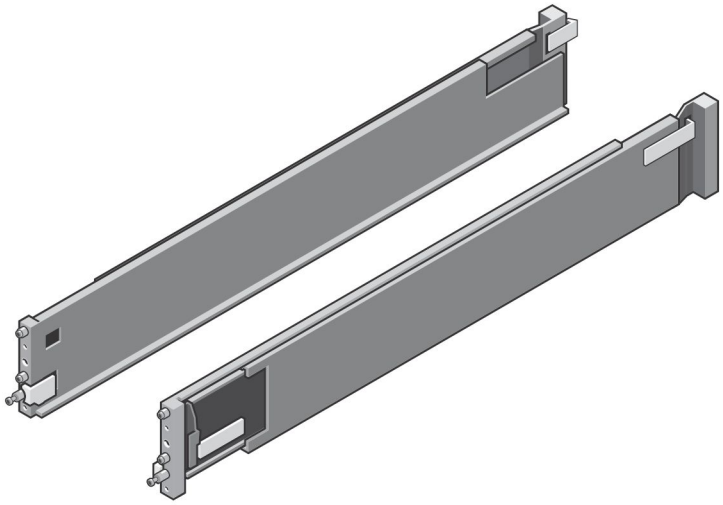
Power cables	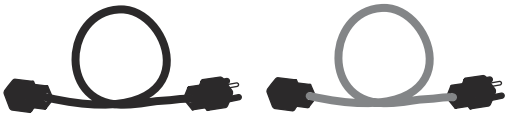
Bezel for disk processor enclosure (1)	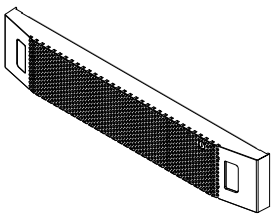

Record the product serial number from the DPE

The PSNT for the 25-slot DPE is a black pull-out tag that is located between the drives in slots 16 and 17.

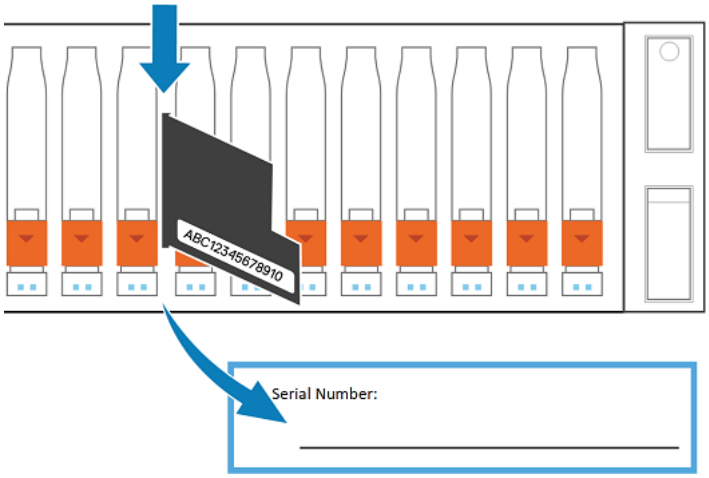

Figure 1. Location of the product serial number tag

Pull the tag out and record the product serial number from the tag on the Configuration Worksheet. The product serial number is three letters followed by 11 numbers. After recording the information, return the tag to its inserted position.

Install the rails in the cabinet

This task describes the procedure to install one rail. After installing one rail, repeat the procedure for the other rail. The procedure is the same for both the left and right rail. You can install the rails into either a square or round hole rack.

Steps

1. Position the rail end piece so the label FRONT is at the front of the rack and facing towards the inside of the rack, while orienting the rear of the rail to align level with the holes on the rear of the rack.
2. From the rear of the rack, pull the rail straight back until the latch is locked.
3. To install the frontend piece of the rail, press the blue latch release button until the latch rotates open.
4. Pull the rail forward until the pins slide into the holes on the front of the rack, then release the latch to secure the rail in place.

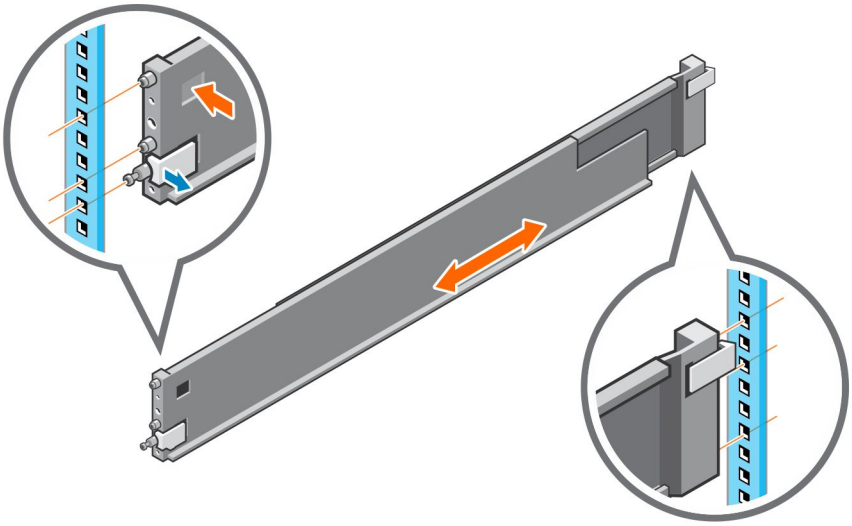

Figure 2. Installing the rails

5. Repeat for the other rail.
6. The rail kit ships with two screws for additional security. Install the security screws into the rear of the rails in the screw hole next to the blue spring lock.

   NOTE: You may need a long-handled screwdriver to reach the screw hole.

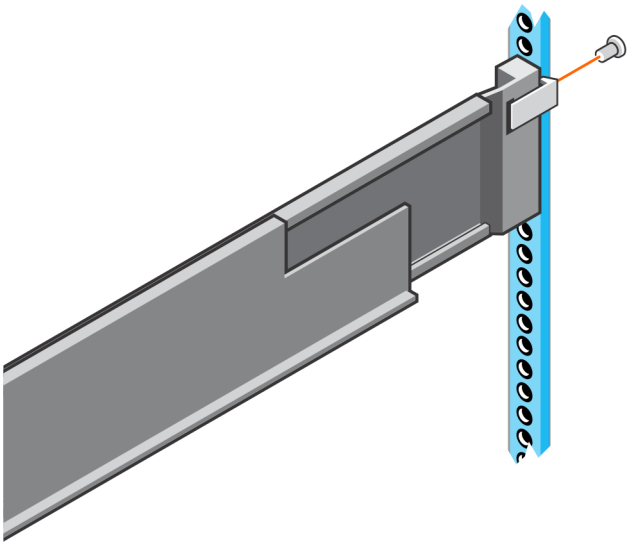

Figure 3. Installing the security screws

Install the DPE on the rails

About this task

WARNING:

The enclosure is heavy and should be installed into or removed from a rack by two people. To avoid personal injury and/or damage to the equipment, do not attempt to lift and install the enclosure into a rack without a mechanical lift and/or help from another person.

Steps

1. Lift the enclosure and slide it onto the rails from the front of the cabinet.
2. Push the system into the rack until the slam latches engage and lock the system into the rack.
   Ensure that the enclosure is flush with the front of the rack, fully seated in the cabinet, and does not slide out.

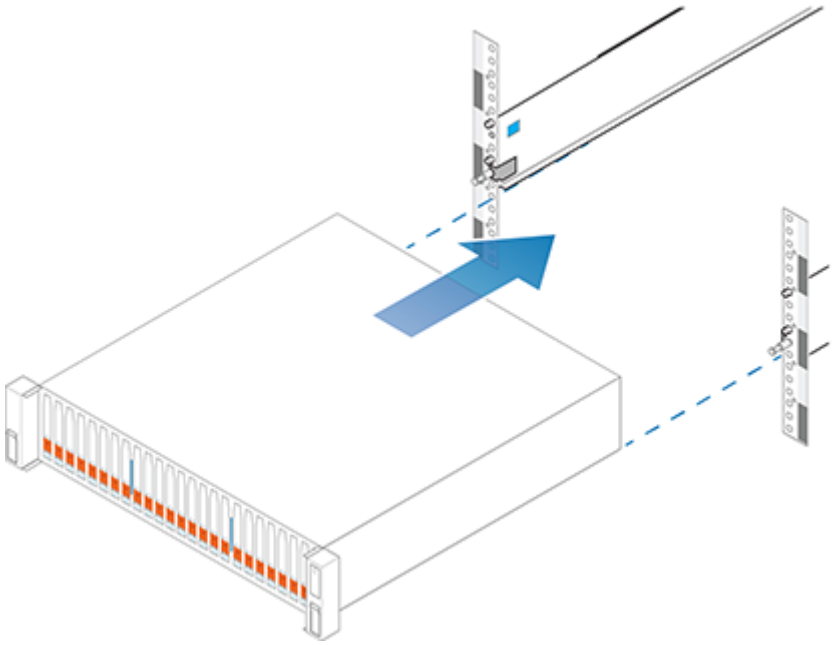

Figure 4. Installing the system in the enclosure

3. **NOTE:** The base enclosure includes captive screws under the front latches. Tighten these screws for NEBs and Telco installations and in earthquake prone locations. Tighten these screws before shipping the cabinet with the base enclosure installed.

   If necessary, locate the captive screw under each latch and tighten to the front of the cabinet using a #1 Philips screwdriver.

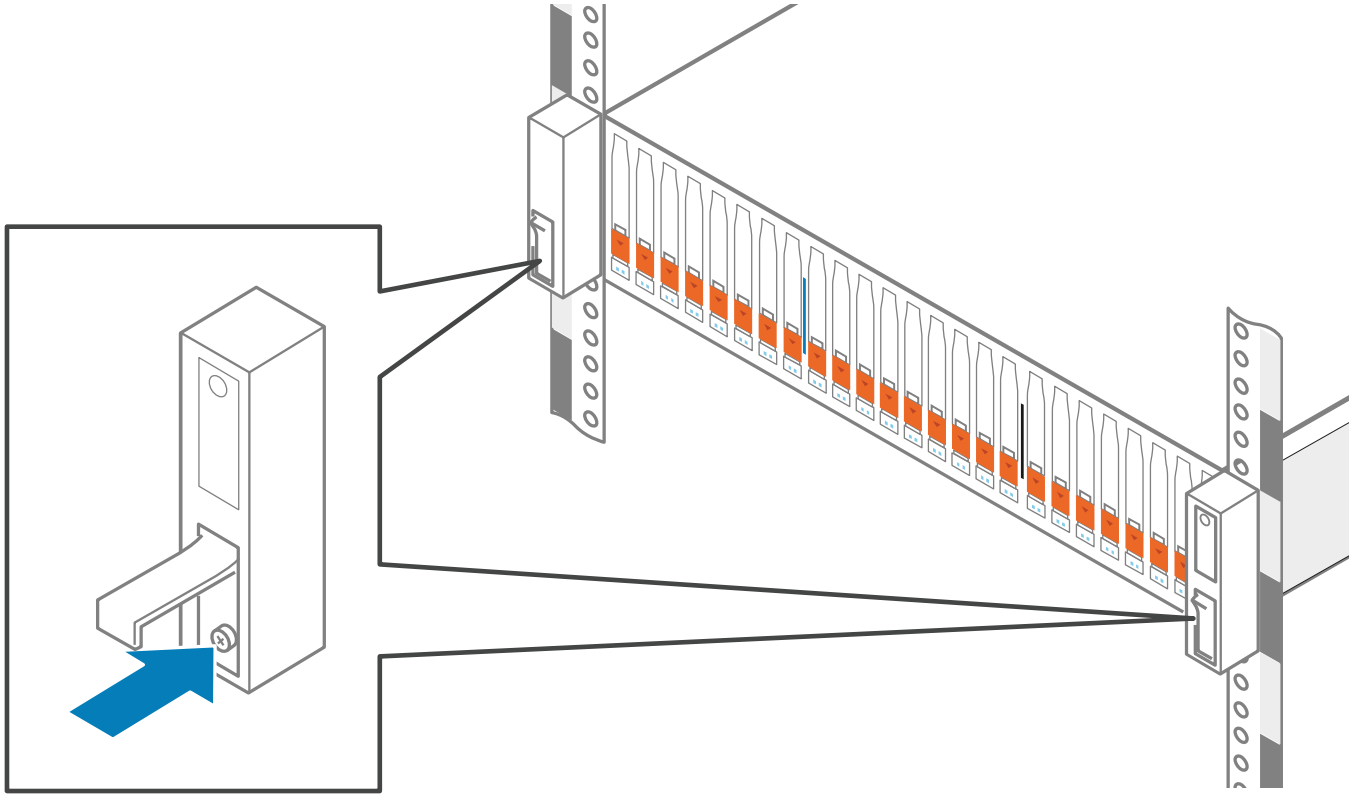

Figure 5. Tightening the captive screws

Secure the system in the cabinet

Steps

If securing the system for shipment in the cabinet or in other unstable environments, locate the captive screw under each latch and tighten using a #1 Phillips screwdriver.

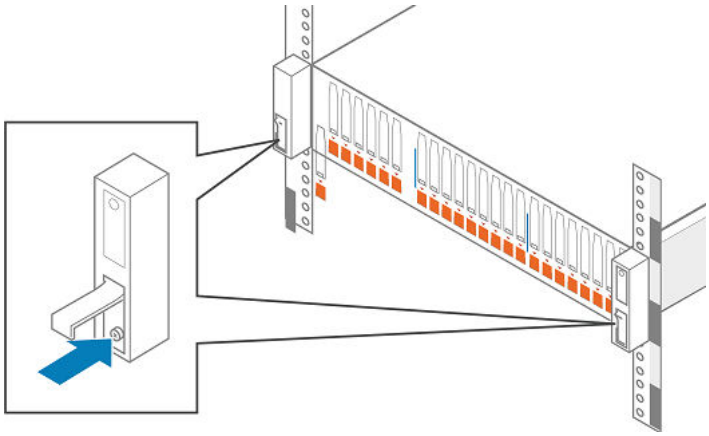

Figure 6. Securing the system in the cabinet

Attach the storage processors to the network

Steps

1. Locate two bulk Category (CAT) 5, 5e, 6, 6a or better Ethernet cables.
2. Connect two Ethernet cables from the LAN to the 1 Gb RJ45 management ports from which you configure the system. This is one port on each storage processor.

   NOTE: The SP A and SP B network management ports must be connected on the same subnet. In general, both SPs should have mirrored configurations in order to provide failover.

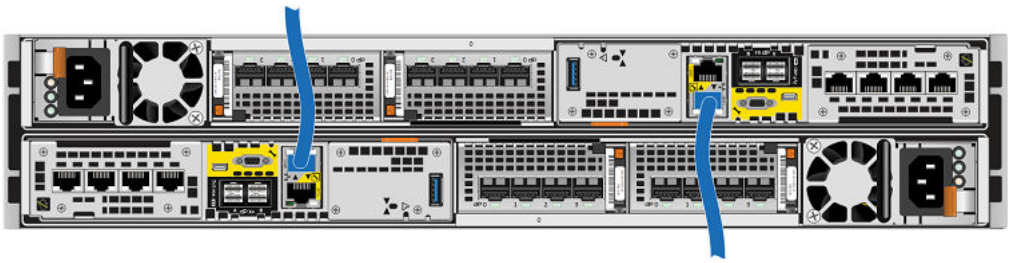

Figure 7. Cabling the storage processors to the network

NOTE: Once the management cables are plugged into each SP, do not remove them unless instructed to do so by Service, or in order to perform maintenance on the system as instructed by the maintenance procedure.

NOTE: Additional information about the ports and cabling is in the *Hardware Information Guide*, available on the Unity Info Hub at Dell Unity Info Hub or on Online Support (Dell Support).

Install optional DAEs

If you are installing one or more optional DAEs, see Unpack the (optional) disk-array enclosures for installation instructions.

If you are not installing an optional DAE, continue to the next section.

Connect power to the DPE

Prerequisites

All components must be racked and the network cabling completed before connecting the storage system to power and booting the system.

Steps

1. Verify that the cabinet circuit breakers are in the On position and that power is connected to the cabinet.

   NOTE: No power cables should be connected to the PDUs at this time.

2. Attach a double-sided Shut Down Procedure cable label to each power cable using the tie wraps in the Accessory Kit.

   NOTE: Attach each label close to the end of the power cable where it plugs into the DPE.

3. Plug each DPE power cable into each SP assembly's power supply unit.

   The power cable to SP assembly A is gray. The power cable to SP assembly B is black.

4. Secure each power cable to the system component with the cable retention bail on the power supply unit.
5. Connect the DPE to the power distribution unit as follows:
   a. Connect the power supply for SP assembly A, shown in gray, to PDU A .
   b. Connect the power supply for SP assembly B, shown in black, to PDU B.

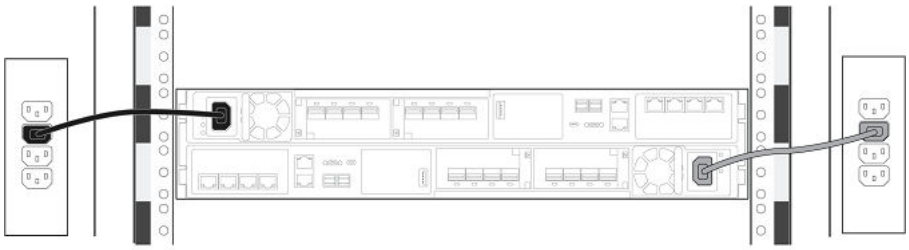

Figure 8. Cabling the DPE to the PDU

6. Bundle and secure the cables as necessary with tie wraps.
7. If your storage system has been installed in a cabinet, place the single-sided adhesive-backed Shut Down Procedure label included in the Accessory Kit on the back of the cabinet door. Otherwise, place this label in a location that is visible while viewing the storage system from the rear.
8. Monitor the system as it powers up. It takes approximately 10-15 minutes for the system to power on. The LEDs show the progress of system activation. Green, blue, and amber activity lights blink during the startup sequence. Review the next section for information about the power on states.

Power up optional DAEs

If you installed one or more optional DAEs, attach the power cables. See Connecting power to the DAE for instructions on powering up a DAE.

If you are not installing an optional DAE, continue to the next section.

Verify status LEDs

The system should be available in approximately 15 minutes.

This section calls out only the LEDs that you need to verify to ensure that the system powered up correctly.

NOTE: The *Unity Hardware Information Guide* provides more details on all system LEDs.

The array is powered up and ready to run the Connection Utility when the SP Fault LED shows intervals of amber for one second and blue for three seconds. If the system is on a network with a DNS server and DHCP, the management IP address can be assigned automatically. When it is assigned, the SP Fault LED is solid blue. Ensure that the power-up is complete and that the system is ready before you continue.

DPE rear status LEDs

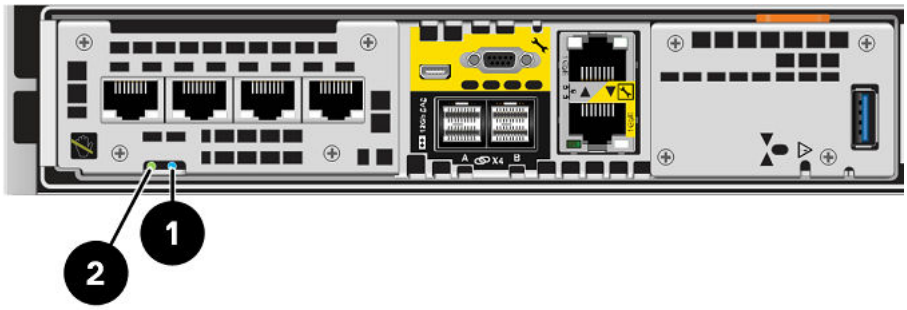

Figure 9. Storage processor assembly LEDs

Table 2. Storage processor assembly LEDs

LED	Location	State	Description
Storage processor assembly fault	1	Amber	Fault has occurred.
		Blue	A management IP address has been assigned.
		Amber or blue blinking	System is booting.
		Blue and amber alternating (blue for 3 seconds)	System not initialized. A management IP address has not been assigned.
		Blue and amber alternating at one second intervals	Storage processor assembly in Service Mode.
		Off	No fault has occurred, normal operation.
Storage processor assembly power	2	Green	Storage processor assembly is on (main power).
		Green blinking	Storage processor assembly is initializing a serial over LAN session.
		Off	Storage processor assembly is off.



Figure 10. DPE and drive LEDs

Table 3. DPE and drive LEDs

LED	Location	State	Description
Drive fault	1	Amber	Fault has occurred.
		Off	No fault has occurred, normal operation.
Drive active	2	Blue	Drive activity.
		Off	The drive is powered off.
DPE fault/power	3	Blue	Power is on. No fault has occurred, normal operation.
		Amber	Power is on. Fault has occurred within the enclosure.
		Off	The power is off.

Installing the front bezel

About this task

CAUTION: Remove the plastic protective strip from the front of the bezel prior to placing the system into operation. Failure to do so will cause the system to overheat.

Steps

1. If present, remove the plastic protective strip from the front of the bezel.
2. Align the bezel with the enclosure.
3. Gently push the bezel into place on the cabinet until it latches.
4. If the bezel has a lock, insert the key that shipped with your enclosure into the lock, and turn the key to lock the bezel.

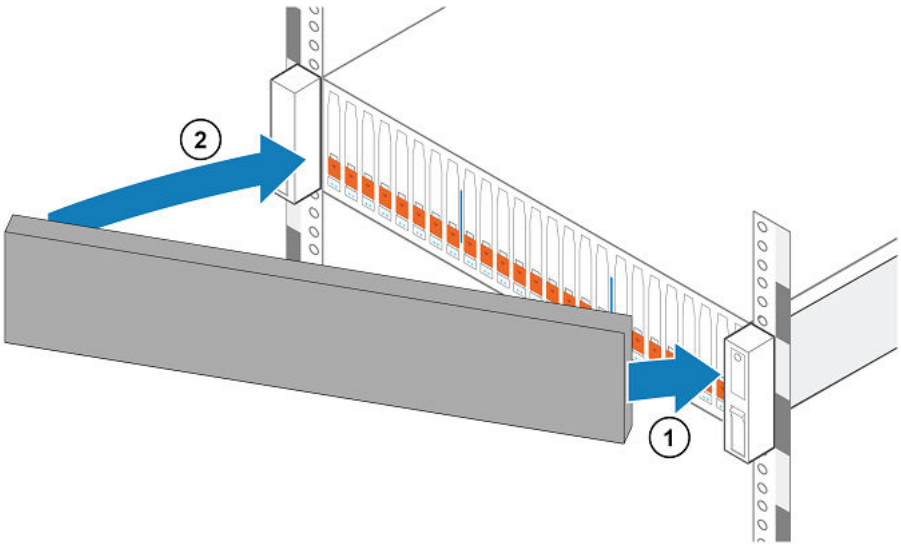

Figure 11. Installing the front bezel

Connect a Windows-based system to your storage system

NOTE: At the end of the power-up process, the SP Fault LED blinks in intervals of amber for one second and then blue for three seconds, indicating that the system is ready to run the Connection Utility.

You must connect a Windows-based system to your system directly or remotely over a subnetwork. This system is used to continue setting up your system and must be on the same subnet as the storage system to complete the initialization.

NOTE: Check to see if there is security software running on your workstation/laptop such as Cisco Security Agent or McAfee Host Intrusion Prevention Service that may prevent the initialized system from being detected. If there is, disable it (Windows Services) before running the initialization.

The system management ports support both IPv4 and IPv6. You can assign an IP address to a system in the following ways:

- If you are running the storage system on a dynamic network that includes a DHCP server and a DNS server, the management IP address can be assigned automatically.
- If you are not running the storage system in a network that supports DHCP or you would rather manually assign a static IP address, you must install and run the Connection Utility on the Windows-based system.

Do not use dynamic IP addresses (DHCP) for any components of the Secure Connect Gateway servers or managed devices unless they are configured with the FQDN of the Secure Connect Gateway server.

NOTE: An IP address is not needed for a Dell Technology Connectivity Services configuration with a connection type of direct connect. If you use DHCP to assign IP addresses to any Dell Technology Connectivity Services components (Secure Connect Gateway servers or managed devices), they must have static IP addresses. Leases for the IP addresses that those devices use cannot be set to expire. It is recommended that you assign static IP addresses to those devices you plan to have managed by Dell Technology Connectivity Services. For a Dell Technology Connectivity Services configuration with a connection type of connect through a gateway, FQDNs can be configured instead of IP addresses.

Automatically assigning a dynamic storage system management port IP address

About this task

Assigning an IP address to a storage system management port dynamically requires the following:

- Network DNS server (with dynamic DNS services enabled)
- Network DHCPv4 server and/or a DHCPv6 server and/or a router advertising DNS servers
- Connectivity between the storage system, the DHCP server, and the DNS server

The DHCP server must be configured to automatically register DHCP clients with Dynamic DNS services. By default, storage systems are configured to use DHCP for IP assignment and will accept an IP address that is offered by a network DHCP server.

Perform the following steps to automatically assign an IP address to your storage system management port:

Steps

1. After you power on the storage system, check the SP Fault LED.
   - If the SP Fault LED is solid blue, a management IP address has been assigned.
   - If the SP Fault LED is solid blue for three seconds and then flashes amber for one second intervals, no management IP address has been assigned. Check the connectivity between the system, the DNS server, and the DHCP server.
2. Open a web browser and access the Unisphere management interface specifying the following as a URL in the browser's address bar: serial_number.dns_zone

   where

Table 4. The URL

URL string	Description
serial_number	Serial number of your storage system. You can find this in the packing materials that came with your system (for example, FNM00131800283). It is also on the PSNT tag on the front of the DPE.
dns_zone	Network DNS zone on which the storage system is located (for example, mylab.dell.com).

Based on the examples provided in this table, the URL to the storage system would be FNM00131800283.mylab.dell.com.

NOTE: If a certificate error appears, follow the instructions in your browser either to bypass the error or to install the self-signed storage system certificate. For more detail about your storage system certificate, refer to the *Dell Unity Security Configuration Guide*.

3. Log in with the default username and password.
   - **Username:** `admin`
   - **Password:** `Password123#`

   The Unisphere Initial Configuration wizard launches.
4. Continue with the steps in the Unisphere Initial Configuration wizard to accept the license agreement, configure, and update the software on your system.

   The Unisphere Initial Configuration wizard online help provides information about the steps remaining to accept the license agreement, configure, and update the software on your system.
5. Confirm that the SP Fault LED is now out.

   This provides an indication that all operating system software has booted and SP is ready for I/O.

Manually assigning a static storage system management port IP address

To manually assign a static IP address for the storage system management port, you must install and run the Connection Utility on a Windows-based computer. The Connection Utility assigns a network address to the storage system.

Download and install the Connection Utility software

Steps

1. Download the Connection Utility installation program from the Dell Online Support website (Dell Support), under the **Downloads** selection on the menu bar of the product page for your storage system.
2. Install the Connection Utility software on a Windows computer.

   To use the Auto Discover method, install the Connection Utility on a computer in the same subnet as the storage system's management port.
3. Launch the Connection Utility.

   In Windows: `C:\Program Files\DELL EMC\Unity\ConnectionUtility`

   NOTE: The Connection Utility automatically sets the displayed language based on the settings of the computer. To change the language displayed in the Connection Utility, select the language from the list under **Change language:**.

Run the Connection Utility

Prerequisites

Obtain the following information:

- **Serial Number**: Unique identifier associated with the storage system (printed on a tag located on the system). This identifies your system when you use the Connection Utility to discover storage systems on a subnet. When you register your system online, this value is the Product ID.
- **System name**: Name that you will be assigning to the storage system.
- **IP address**: Management IPv4 or IPv6 address through which Unisphere connects to the storage system.
- **Subnet mask**: For IPv4 management addresses, the subnet mask is an IP address mask that identifies the range of IP addresses in the subnet where the storage system is connected.
- **Subnet prefix length**: For IPv6 management addresses, the subnet prefix length is the number of significant bits in the address that will be used for routing purposes.
- **Gateway address**: IP address of the default gateway for the management interface. The gateway is the IP address of the router or node used to communicate outside the local subnet.

Run the Connection Utility from a host attached to the same subnet as your storage system. Doing so lets the Connection Utility automatically detect the new storage system. If you are unable to run the Connection Utility from the same subnet, you can still manually configure the connection.

Steps

1. On the **Welcome** screen, select one of the following methods to configure your system, and then click **Next**:
   - **Auto Discover** - Use this method if you are running the Connection Utility from a host on the same subnet as your storage system. This method automatically discovers unconfigured storage systems on your local network and sends the configuration file directly to the storage system.
   - **Manual Configuration** - Use this method if you are running the Connection Utility from a host that is not on the same subnet as your storage system. This method enables you to create a configuration file that you can save to a USB flash drive. You then insert the flash drive into the USB port on the storage system, and the storage system automatically reads the configuration from the USB drive.
2. [Applies to **Auto Discover** mode only] From the list of automatically discovered systems, select the system you want to configure, and then click **Next**. Note: If you do not see the system listed on the screen, try clicking **Discover** to restart the discovery process. If the problem persists, refer to troubleshooting instructions.
3. On the **Configure** screen, specify the following:
   - **Name** - A meaningful name for this system. You can specify a name up to 32 characters. It can only contain alpha-numeric characters and a dash. It cannot contain any space characters, underscores, or begin and end with a dash.
   - In the **Management IPv4 Address** and **Management IPv6 Address** sections, select the options you want, specify relevant information, and then click **Next**.
4. Review the configuration information, and then do the following based on the mode you selected:
   - For **Auto Discover** mode, click **Start** to apply the configuration on the storage system.
   - For **Manual Configuration** mode:
     a. Click **Save to USB drive**. Ensure that you save the configuration file to the root directory level of the USB drive.
     b. Click **Next** to identify the location of the port on your storage system.
     c. Insert the USB drive into one of the available USB ports on either SP.

     The storage system will automatically detect the USB drive and apply the network connection information. This process may take up to 10 minutes. When successfully completed, a response file (iw_resp.txt) is written back to the USB drive.
5. Click **Finish**.
6. Confirm that the SP Fault LED is solid blue, which indicates that the system's IP address has been set.

Next steps

In a web browser, access Unisphere by specifying the URL: **http://<ip_address>/**.

Where, **<ip_address>** is the IP address you set for the storage system.

NOTE: Refer to the *Configuration Worksheet* for information on the user credentials you must use the first time you log on.

The Initial Configuration Wizard launches the first time you access Unisphere. Refer to the *Configuration Worksheet* and *Unisphere Online Help* for more information on configuring and start using your system.

Unpack the (optional) disk-array enclosures

Disk-array enclosures (DAEs) provide additional storage. The types of DAEs available are:

- 3U 15 disk 3.5" drive DAE
- 2U 25 disk 2.5" drive DAE

DAEs are optional. If you have one or more DAEs in the system, verify that you have received all of the DAE components, including cables, bezel, rail kit, and mounting screws.

15-drive DAE container contents

Verifying shipping package contents

About this task

Confirm that you received all necessary equipment that is needed to install the new 15-drive DAE.

Verify that you received the following:

Steps

1. Confirm that you received all necessary equipment that is needed to install the new 15-drive DAE.
2. Verify that you received the following:

Table 5. 15-drive DAE components

Component		Quantity
Disk-array enclosure (DAE)	Front view 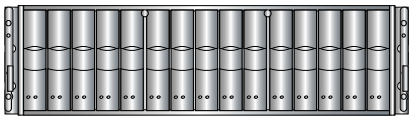 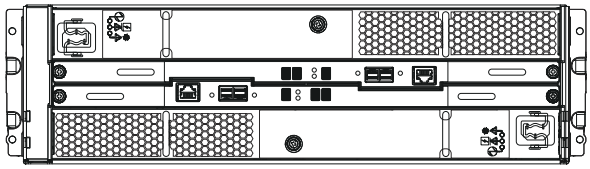 Rear view CL5665	1
Snap in rail kit	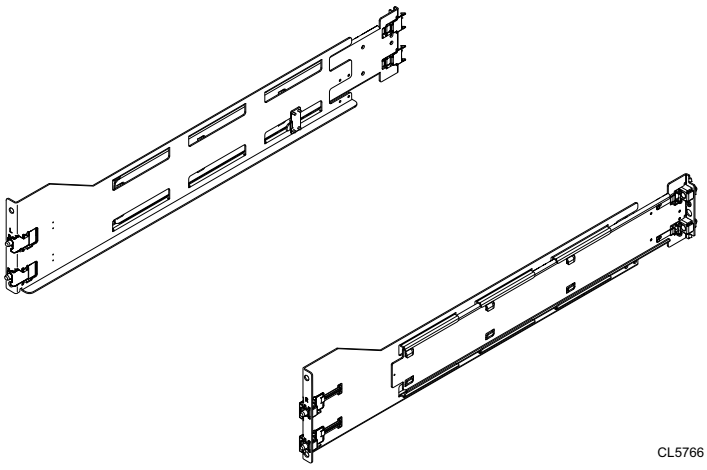 The kit  CL5766	1 (includes 2 rails and 6 screws)
Power cables (AC or DC)	AC power cables 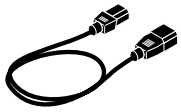	2

Table 5. 15-drive DAE components (continued)

Component		Quantity
	DC power cables	
Bezel for disk-array enclosure (with key)	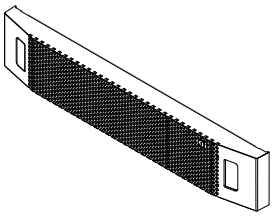 Bezel	1
SAS cables (either 1 or 2-meter copper) that connect disk-array enclosures to each other (1-meter cables) or to DPE (2-meter cables)	 SAS cables	2

25-drive DAE container contents

Verifying shipping package contents

Confirm that you received all necessary equipment that is needed to install the new 25-drive DAE.

Verify that you received the following:

Table 6. 25-drive DAE components

Component		Quantity
Disk-array enclosure (25-drive DAE)	Front view  Rear view 	1
Rail kit, including Snap-in rails (2) Screws (3 per rail)	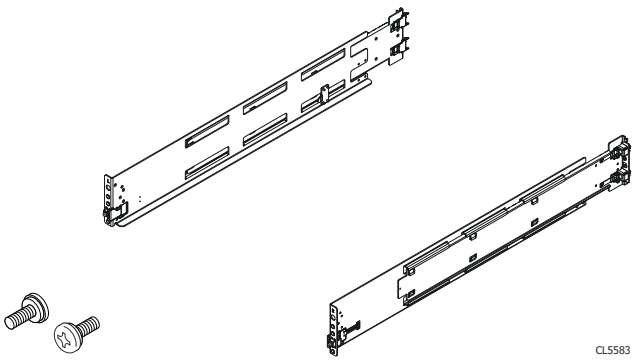	1
Power cables		2

Table 6. 25-drive DAE components (continued)

Component		Quantity
Bezel for disk-array enclosure (with key)	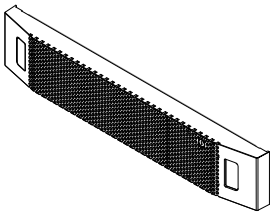	1
mini-SAS HD cables (either 1 or 2-meter copper) that connect disk-array enclosures to each other (1-meter cables) or to DPE (2-meter cables)		2

Install the disk array enclosure

There are two types of DAEs. One is a 3U 15 disk 3.5" drive DAE. The other is a 2U 25 disk 2.5" drive DAE. DAEs are optional. The installation procedures are slightly different for each.

Install 15-drive DAE

Installing snap-in rails in the cabinet

About this task

NOTE: The snap-in rails are dedicated left and right, and cannot be interchanged. The front edge of each rail is stamped L or R for the left or right side when the rail faces the cabinet front.

The snap-in rails have two key tabs at the top and bottom edge on the rear of each rail. The key tabs ensure that the rails are installed in the appropriate 2U space.

Steps

1. From the rear of the cabinet, insert the two key tabs into the holes of the 2U-space on the rear cabinet channel.

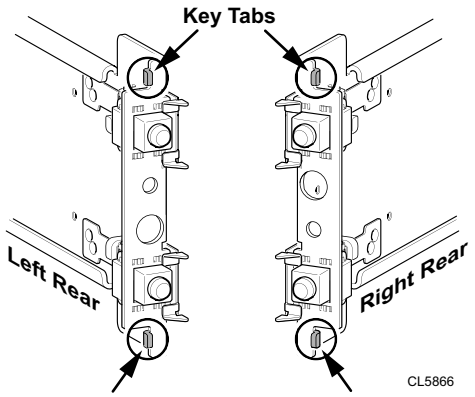

Figure 12. Key tabs at rear rail top and bottom edge

NOTE: As the key tabs and adapters are pushed into the rear mounting holes, the spring clips will ride over the cabinet channel and snap into place.

2. Holding the rail extended, push the key tabs and the adapters into the rear mounting holes until the spring clips snap into place on the outside of the rear cabinet channel.

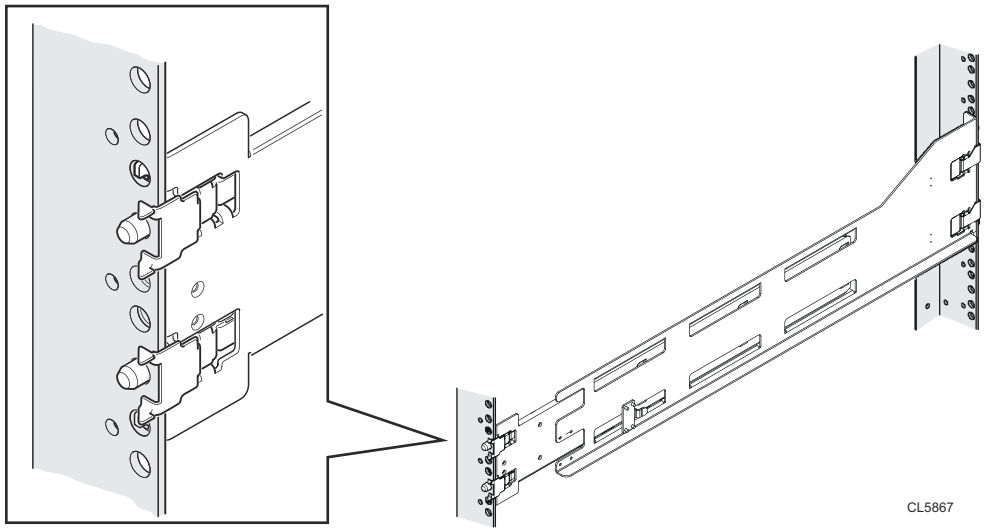

Figure 13. Aligning the rear adapters (left rear of cabinet shown)

3. At the front of the cabinet, making sure that the rail is level, pull it forward and align the rail adapter with the mounting hole in the channel. Push in on the spring clip while pulling forward on the rail. When the spring clip is forward of the front cabinet channel, and the adapter is in the mounting holes, release the spring clip so it holds the rail in place.

CAUTION: Ensure that the spring clip is securely attached to the channel. It may be necessary to push in on the clip to help with snapping it into place.

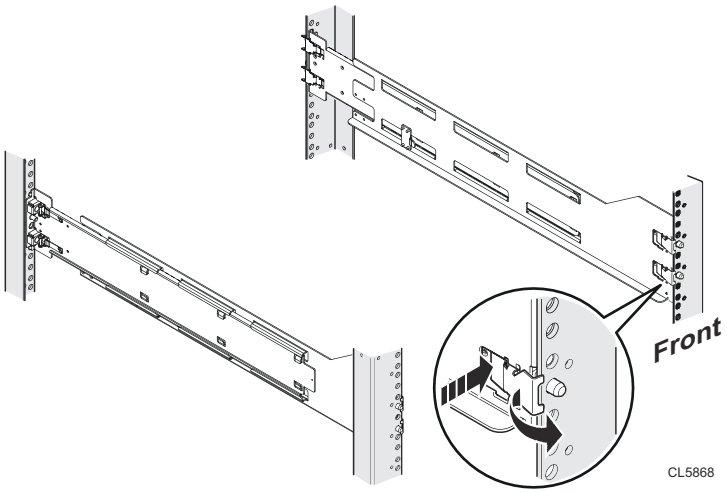

Figure 14. Securing the Spring Clips

4. From the rear of the cabinet, secure the rail in place using one M5 screw on each rail.

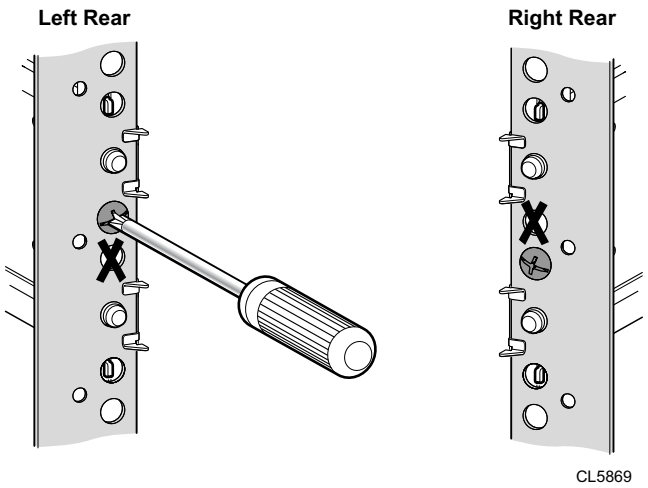

Figure 15. Installing the M5 Screw

Installing the DAE on the rails

About this task

WARNING:

The enclosure is heavy and should be installed into or removed from a rack by two people. To avoid personal injury and/or damage to the equipment, do not attempt to lift and install the enclosure into a rack without a mechanical lift and/or help from another person.

Steps

1. With help from another person, lift the enclosure and, from the front of the cabinet/rack, slide the enclosure onto the rails.

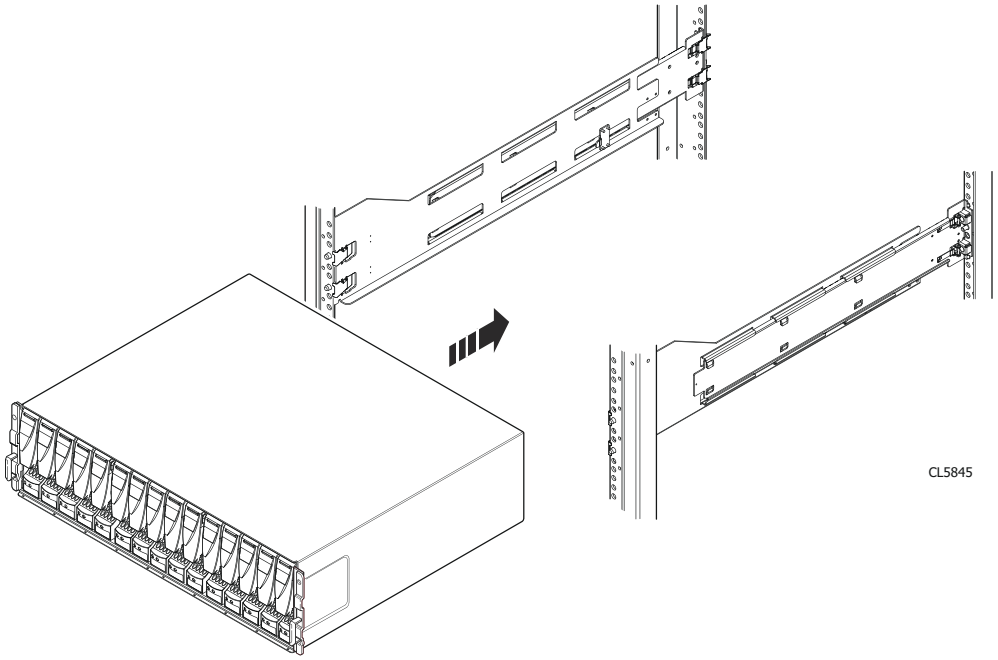

Figure 16. Sliding the enclosure onto the rails

2. Once the enclosure is seated into the rear tabs, secure the front of the enclosure to the front vertical channels with four screws (two per side), but do not tighten the screws until they are all in place.

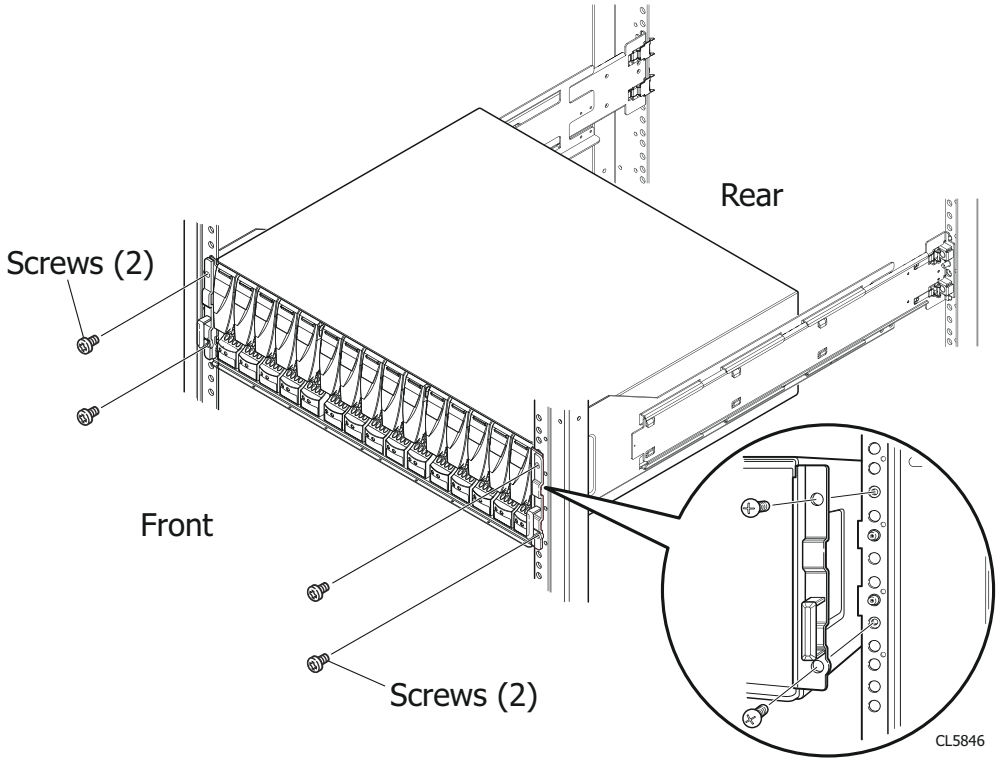

Figure 17. Securing the front of the enclosure

Install 25-drive DAE

Installing the rails in the cabinet

About this task

NOTE: The snap-in rails are dedicated left and right, and cannot be interchanged.

Steps

1. Orient the rails. Face the front of the cabinet when orienting the left and right rail placement. The front edge of each rail is stamped L or R.
2. From the rear of the cabinet, insert the adapters into the holes on the rear rack channel with the rail extended as shown in Push rail into rear channel mounting holes.
3. Push the rail into the rear mounting holes until the spring clips snap into place on the outside of the rear channel.

CAUTION: Ensure the holes on the rail line up with the holes on the cabinet. This ensures proper alignment of the rails. Also, check that the rails are level and using the same cabinet Unit markers from front to rear. Ensure that you are using the same unit markers from the front of the cabinet to the rear of the cabinet.

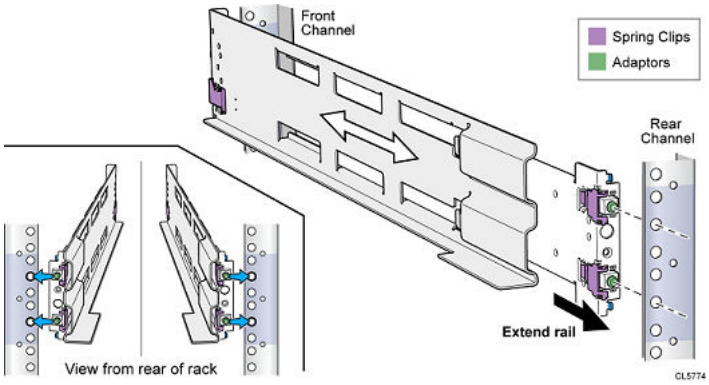

Figure 18. Push rail into rear channel mounting holes

4. From the rear of the cabinet, secure the rails in place using one M5 screw on each rail.

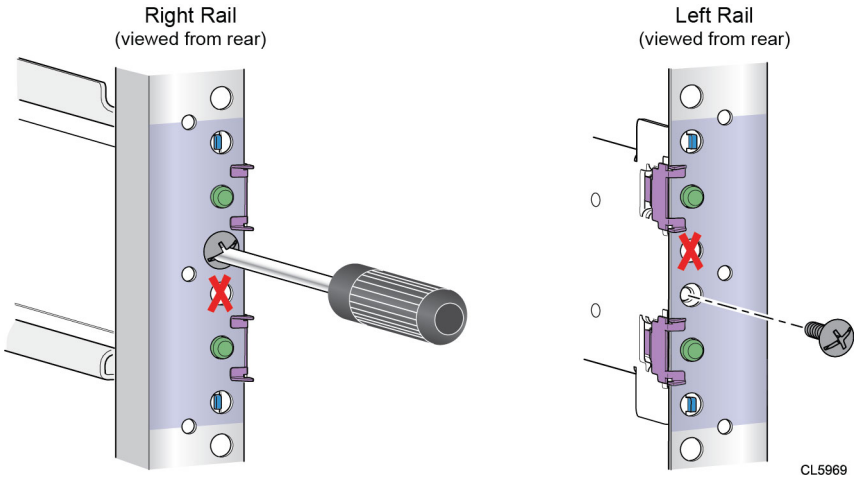

Figure 19. Installing the M5 Screw

5. Working from the front of the cabinet, align the adapter with the mounting hole on the front of the rack as shown in Securing rail to front channel.

> **CAUTION: Ensure the holes on the rail line up with the holes on the cabinet. This ensures proper alignment of the rails. Also, check that the rails are level from front-to-back and left-to-right. Ensure that you are using the same unit markers from the front of the cabinet to the rear of the cabinet.**

6. Push in on the spring clip while pulling the rail forward. When the spring clip is forward of the front rack channel, and the adapter is in the mounting holes, release the spring clip so it holds the rail in place.

> **CAUTION: Ensure that the spring clip is securely attached to the channel. It may be necessary to push in on the clip to help with snapping it into place.**

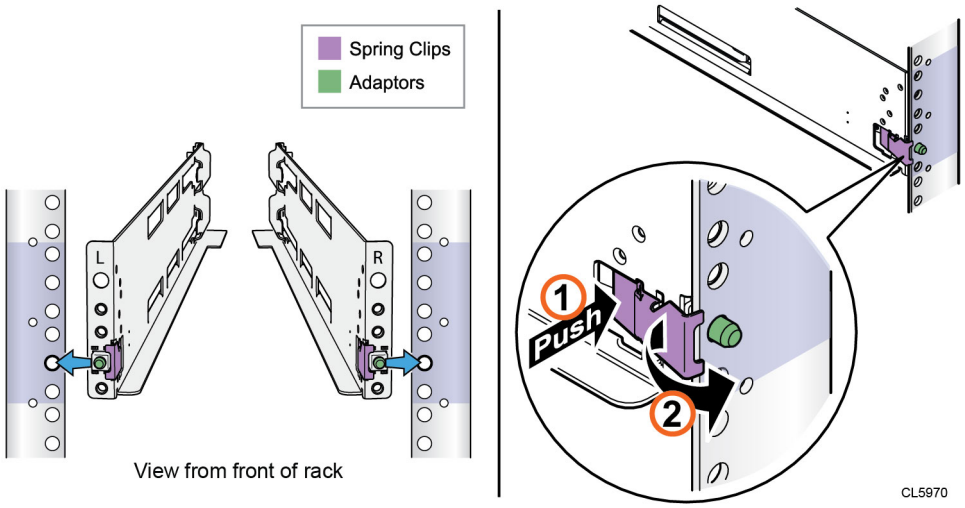

Figure 20. Securing rail to front channel

Installing the DAE on the rails

About this task

CAUTION: Do not install the enclosure without the rear rail screws that are installed and fully tightened. If the screws are not installed and tightened, the rails could rotate out of position, possibly causing the enclosure to fall, damaging the DAE and causing personnel injury.

Steps

1. With help from another person, lift the enclosure and, from the front of the cabinet/rack, slide the enclosure onto the rails.

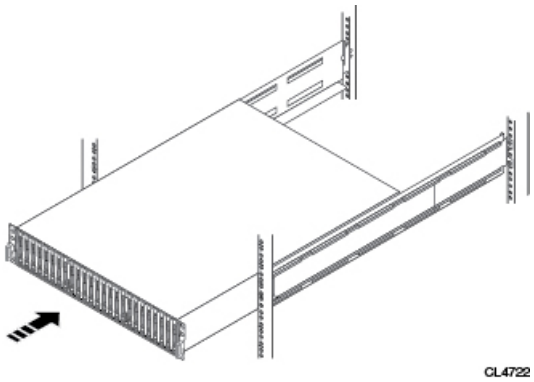

Figure 21. Sliding the enclosure onto the rails

When the enclosure slides to the back of the cabinet, the rear tabs on the rails insert into the notches in the rear of the enclosure. The tabs secure and support the rear of the enclosure.

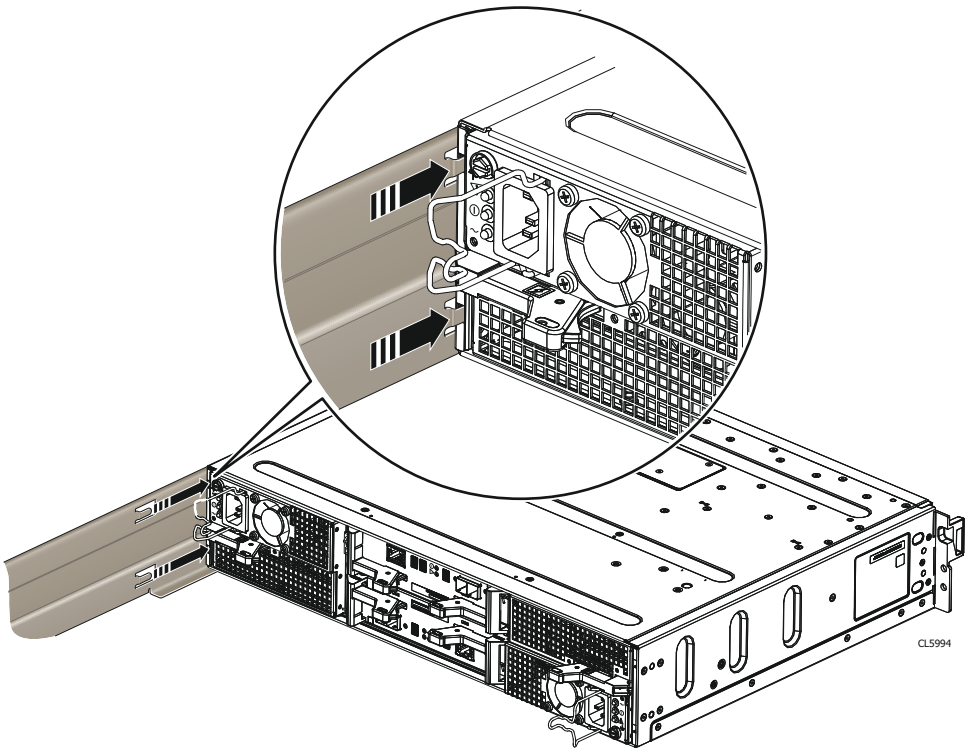

Figure 22. Rail tabs securing the rear of the enclosure

2. Secure the front of the enclosure to the front vertical channels with four screws (two per side), but do not tighten the screws until they are all in place.

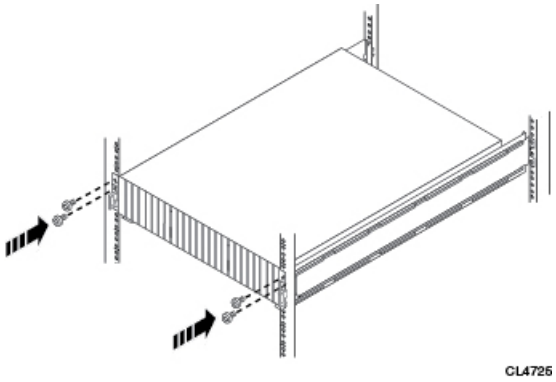

Figure 23. Securing the front of the enclosure

Cabling the DPE to a DAE

If you have one or more DAEs, cable the DAEs to the DPE back-end ports so that the storage is available in the system.

Ensure that the DAE is located close enough to route and connect to the DPE using the two-meter DPE-to-DAE interconnect cables. Five-meter and ten-meter interconnect cables are available when connecting enclosures across multiple racks.

NOTE: General DAE back-end bus configuration rules:

1. Maximum number of enclosures per bus is 10.
2. Maximum number of drive slots per bus is 250, up to specific system limitations for drive slots.
3. For best performance, it is recommended that you evenly distribute DAEs across the available back-end buses.

Consider the maximum number of drives that can be installed in the storage system model. DAEs can be added to the system while the operating system is active, and up to the DAE and drive slot limit for the storage system. DAEs or drive slots that are over the system limit cannot operate in the system.

The storage processors connect to the DAEs with mini-SAS HD cables. The cables connect LCCs in the DAEs of a storage platform in a daisy-chain topology. The mini-SAS HD ports on the storage processors in the DPE are labeled 0 and 1. Mini-SAS HD port 0 is connected internally to the SAS expander that connects the drives on the front of the DPE.

Each DAE supports two redundant connections to the DPE: LCC A and LCC B.

It is recommended that you connect the first optional DAE to the mini-SAS HD output port 1 of each storage processor. This connection creates back-end bus 1 (BE1) and designates this DAE as enclosure 0 of this bus. The address of this enclosure is BE1 Enclosure 0. In a two back-end bus system, it is recommended that you connect the second optional DAE to the mini-SAS HD port 0 of each storage processor.

DAE load balancing

If your system has several optional DAEs, you can daisy-chain them within that bus. However, it is recommended that you balance each bus. In other words, optimize your environment by using every available bus, and spread the number of enclosures and drives as evenly as possible across the buses. The rule of load or bus balancing is applied to all DAEs.

Cabling the first optional DAE to create backend bus 1

Connect the first optional expansion DAE to port 1 of the DPE to create backend bus 1 (BE1) and designate this DAE as enclosure 0 of this bus. We refer to the address of this enclosure as BE1 Enclosure 0 (1_0).

About this task

To prepare for this cabling task:

- Locate the mini-SAS HD cables to be used to connect to the newly installed expansion DAE. Typically these cables are two-meters long. You use longer cables, typically five-meters, or eight-meters, to connect enclosures located in different racks. Cables are shipped without labels attached. The cables and ports are not colored.
- Locate the sheet of cable labels provided.

Orient the cable connectors as described in the procedure that follows, making sure that you do NOT connect:

- A DPE expansion port 0 to another DPE expansion port 0
- Any A-side ports to B-side ports

Steps

1. Label a pair of mini-SAS HD cables.
2. Connect port 1 on SP A in the bottom slot of the DPE to port A on the link control card (LCC A) in the bottom of the DAE.
3. Connect port 1 on SP B in the top slot of the DPE to port A on the link control card (LCC B) in the top of the DAE.

Example

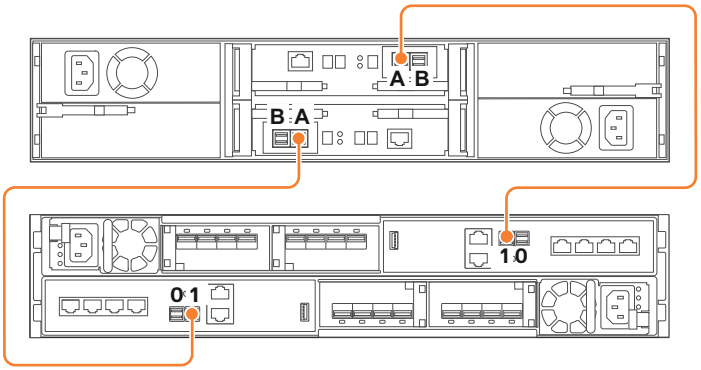

Figure 24. Cabling one DPE to one 25-drive DAE

Cabling the second optional DAE to create backend bus 0

Connect the second optional expansion DAE to the DPE expansion port 0 to extend backend bus 0 (BE0) and designate this DAE as enclosure 0 of this bus. We refer to the address of this enclosure as BE0 Enclosure 0 (0_0).

About this task

NOTE: When cabling the 15-drive DAE LCC SAS ports, ensure that the cables do not overlap behind the DAE.

Steps

1. Label a pair of mini-SAS HD cables.
2. Connect port 0 on SP A in the bottom slot of the DPE to port A on the link control card (LCC A) in the bottom of the DAE.
3. Connect port 0 on SP B in the top slot of the DPE to port A on the link control card (LCC B) in the top of the DAE.

Example

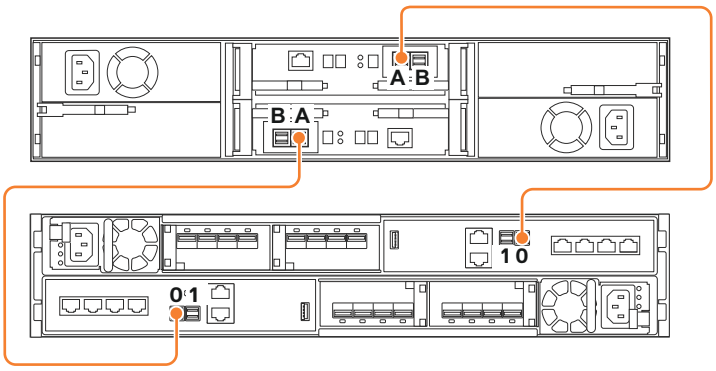

Figure 25. Cabling a DPE to a second 25-drive DAE

Next steps

If you must cable more than two optional DAEs, refer to the *Unity Installation Guide*.

Cabling an expansion DAE to an existing DAE to extend a backend bus

Connect the optional expansion DAE to the last installed DAE in the backend bus to extend to the new DAE.

About this task

NOTE: When cabling the 15-drive DAE LCC SAS ports, ensure that the cables do not overlap behind the DAE.

Steps

1. Label a pair of mini-SAS HD cables.
2. Connect port B on the link control card (LCC A) of the lower-numbered DAE to port A on the link control card (LCC A) of the higher-numbered DAE.

   LCC A is on the lower portion of the DAE.
3. Connect port B on the link control card (LCC B) of the lower-numbered DAE to port A on the link control card (LCC B) of the higher-numbered DAE.

   LCC B is on the upper portion of the DAE.

Connect the DAE to another DAE

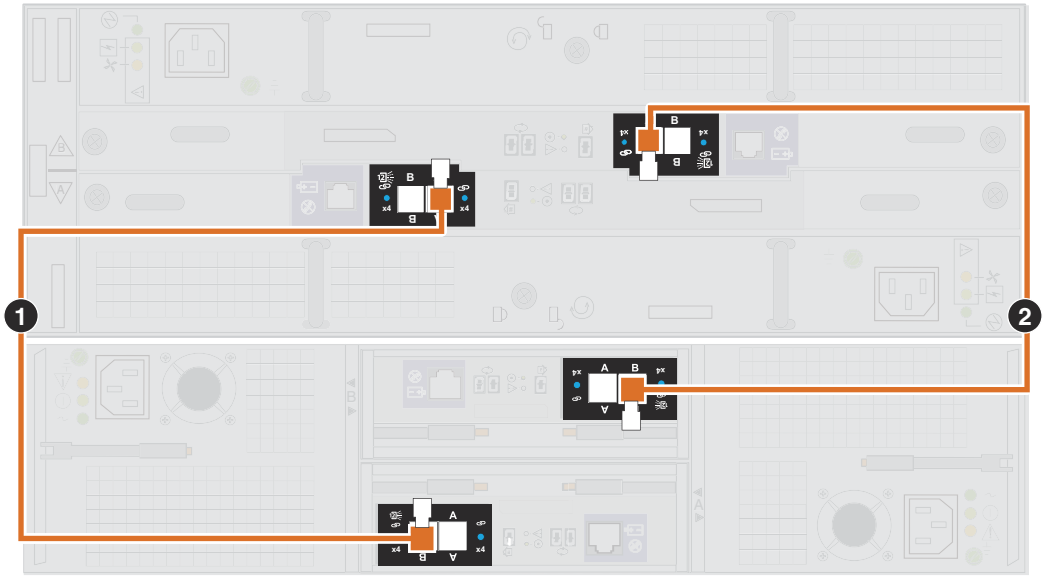

Figure 26. 25-drive DAE extended to a 15-drive DAE

Connecting power to the DAE

Steps

1. Verify that the cabinet circuit breakers are in the On position and that power is connected to the cabinet.
2. Connect the power cables to the optional DAEs.

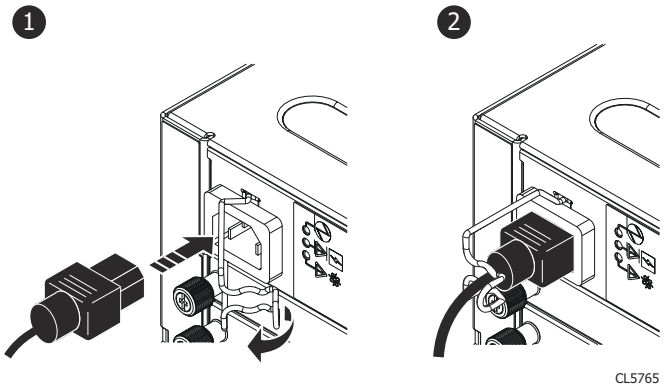

Figure 27. Connecting power cables to the 3U, 15-drive DAE

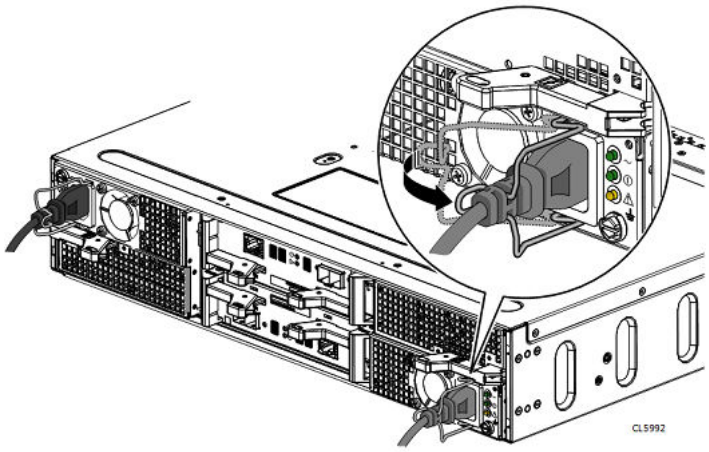

Figure 28. Connecting power cables to the 2U, 25-drive DAE

3. Secure each power cable to the power supply with the cable retention bail.
4. Connect the power to each DAE as follows:
   a. Connect the power cable for LCC A to PDU A.
   b. Connect the power cable for LCC B to PDU B.

   The enclosures power on immediately once the cable is connected.
5. Bundle and secure the cables as necessary with tie wraps.

2

Service Procedures

This document describes how to replace parts or add new parts to a system.

Before you service the system, ensure that you have received the new part and have correctly identified its intended location in the system. Go to the Unisphere **Service** section for instructions on how to identify failures, order new parts and safely handle hardware components.

When servicing the system, only add or replace one component at a time. New hardware added while simultaneously servicing other components may not be recognized by the system and can cause errors.

NOTE: Review the information in Safety precautions for handling replaceable units before handling replaceable parts.

Topics:

- Replace a faulted drive in the DPE
- Add a new drive in the DPE
- Replace a power supply
- Replace an embedded module
- Add a 4-port card
- Replace a 4-port card
- Add an SFP
- Replace a faulted SFP
- Replace an I/O module
- Add an I/O module
- Replace a fan module
- Replace a dual inline memory module (DIMM)
- Replace an M.2 SSD
- Replace an SP assembly

Replace a faulted drive in the DPE

Take the following actions to remove a faulted drive and install the replacement drive into the DPE.

Identifying and locating the faulted part in Unisphere

Before you replace a faulted part, locate its placement within the storage system.

Steps

1. In Unisphere, select **System View**.
2. Select the **Enclosures** page.
3. Locate the faulted part marked orange, and displayed in the **Enclosures** view.

Remove a faulted 2.5" drive

About this task

Steps

1. Push down on the orange button to release the latch.
2. Remove the drive from the slot.

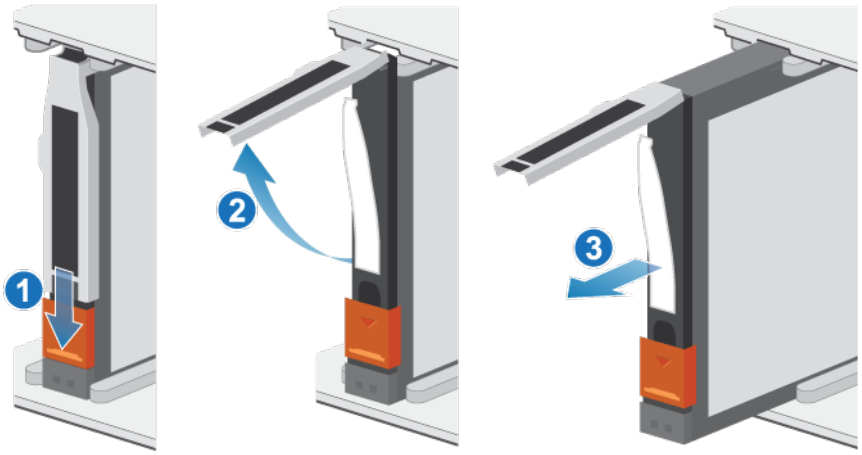

Figure 29. Removing a 2.5" drive

3. Place the drive on a static-free surface.

Install a 2.5" drive

About this task

NOTE: If you are installing multiple drives in a system that is powered up, wait at least 10 seconds before sliding the next drive into position.

Steps

1. Align the drive with the guides in the slot.
2. With the latch fully opened, gently push the drive into the slot.
   The latch begins to rotate downward when it meets the enclosure.
3. Push the orange button until the drive is fully seated in the slot.
4. Push the latch down until it locks into place.
   The activity light flashes to indicate that the spin-up sequence has begun.

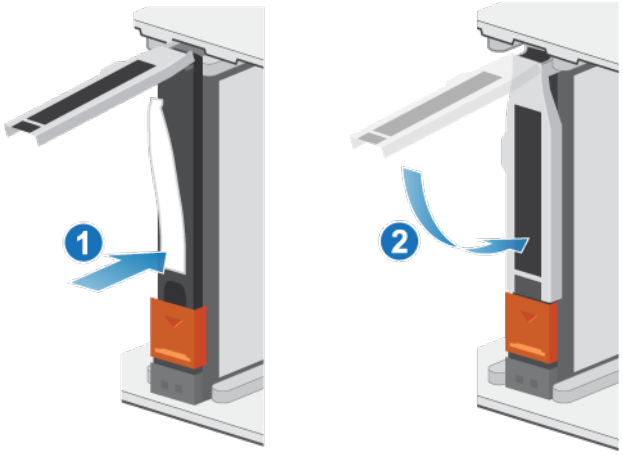

Figure 30. Installing a 2.5" drive

Verifying the operation of the new part in Unisphere

Verify that the new part is recognized by your system, and operating correctly.

Steps

1. In Unisphere, select **System View**.
2. On the **Summary** page, confirm that the system status is OK.
3. Select the **Enclosures** page.
4. Verify that the part appears with the OK status in the enclosure view. You may need to refresh Unisphere by clicking on the refresh icon next to the **Enclosures** view.

   If the system health monitor shows the part as faulted, contact your service provider.

Returning a faulted part

About this task

We appreciate the return of defective material within 5 business days (for US returns). For International customers, please return defective material within 5-10 business days. All instructions and material required to return your defective part were supplied with your good part shipment.

Steps

1. Package the faulted part in the shipping box that contained the replacement part, and seal the box.
2. Ship the failed part to your service provider as described in the instructions that were included with the replacement part.
3. Optional: For more information about returning customer-replaceable parts, from Unisphere, click **Support** > **Replace Disk Drives, Power Supplies, and Other Parts** > **Return a Part** to display the part return instructions.
   If your screen does not show the **Return a Part** option, contact your service provider for instructions on what to do next.

Add a new drive in the DPE

Take the following actions to add a new drive in the DPE.

Removing the front bezel

Steps

1. If the bezel has a lock, insert the key that shipped with your enclosure into the lock, and turn the key to unlock the bezel.
2. Press the two latch buttons on the bezel surface to release the bezel from the cabinet.
3. Pull the bezel off the cabinet and put it on a clean, static-free surface.

Remove a drive filler module

Steps

1. Insert your finger into the cutout on the drive filler module.
2. Pull the filler module out of the slot.

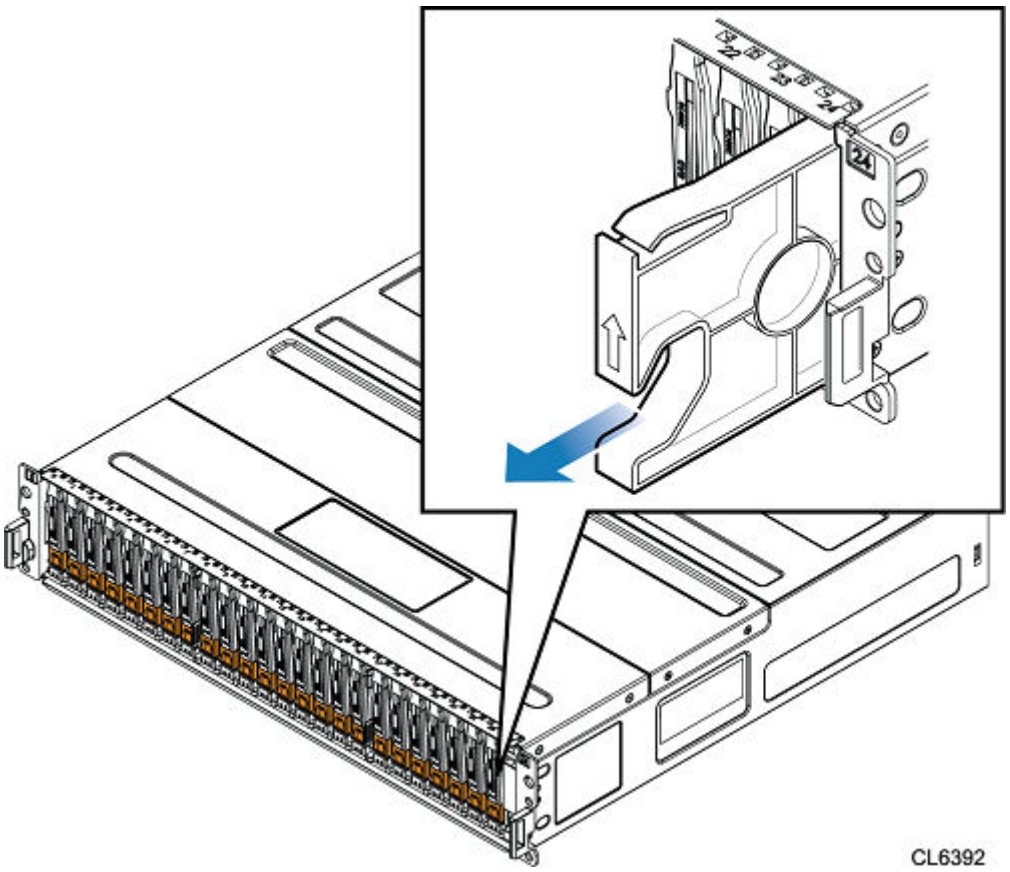

Figure 31. Removing a drive filler module

Install a 2.5" SAS or SAS Flash drive

About this task

NOTE: If you are installing multiple drives in a system that is powered up, wait at least 10 seconds before sliding the next drive into position.

Steps

1. Align the drive with the guides in the slot.
2. With the latch fully opened, gently push the drive into the slot.
   The latch begins to rotate downward when it meets the enclosure.
3. Push the orange button until the drive is fully seated in the slot.
4. Push the latch down until it locks into place.
   The activity light flashes to indicate that the spin-up sequence has begun.

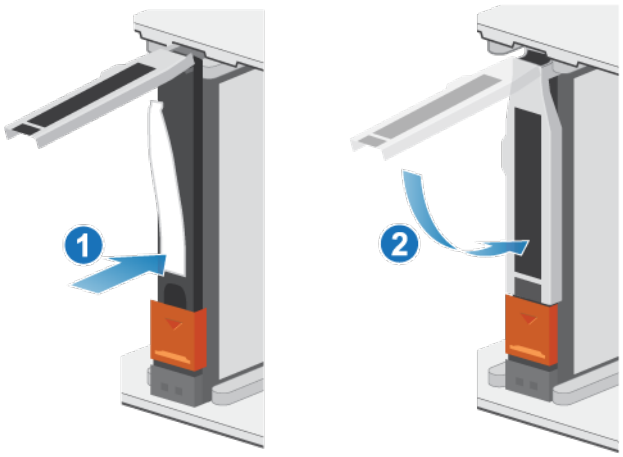

Figure 32. Installing a 2.5" drive

Verifying the operation of the new part in Unisphere

Verify that the new part is recognized by your system, and operating correctly.

Steps

1. In Unisphere, select **System View**.
2. On the **Summary** page, confirm that the system status is OK.
3. Select the **Enclosures** page.
4. Verify that the part appears with the OK status in the enclosure view. You may need to refresh Unisphere by clicking on the refresh icon next to the **Enclosures** view.

   If the system health monitor shows the part as faulted, contact your service provider.

Replace a power supply

Take the following actions to remove the faulted power supply and install the replacement power supply into the system.

Identifying and locating the faulted part in Unisphere

Before you replace a faulted part, locate its placement within the storage system.

Steps

1. In Unisphere, select **System View**.
2. Select the **Enclosures** page.
3. Locate the faulted part marked orange, and displayed in the **Enclosures** view.

DPE power supply LEDs

Use the fault LEDs to identify the faulted part.

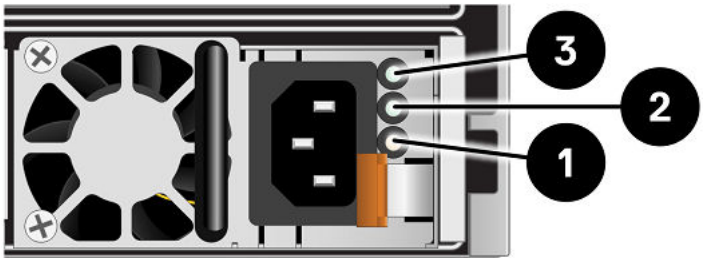

Figure 33. DPE power supply LEDs

Table 7. DPE AC power supply LEDs

LED	Location	State	Description
Fault	1	Solid amber	Power supply or backup fault. Check the cable connection.
		Off	There is no fault.
Supply output status	2	Green	Outputs are normal.
		Off	Outputs are faulted or disabled.
AC power (input)	3	Green	AC power is on.
		Off	AC power is off. Verify the power source.

Remove a power supply

About this task

There are two power supplies. The power supplies are installed in the top and bottom SP assemblies, and the top power supply is installed upside-down. This procedure works for removing either power supply, however, the direction in which the retention bail and release handle are pressed is reversed for the upside-down power supply.

NOTE: You do not need to power off the system to remove a power supply.

Steps

1. Rotate the power cable retention bail to the left (to the right for the upside-down power supply). Remove the power cable from the power supply.

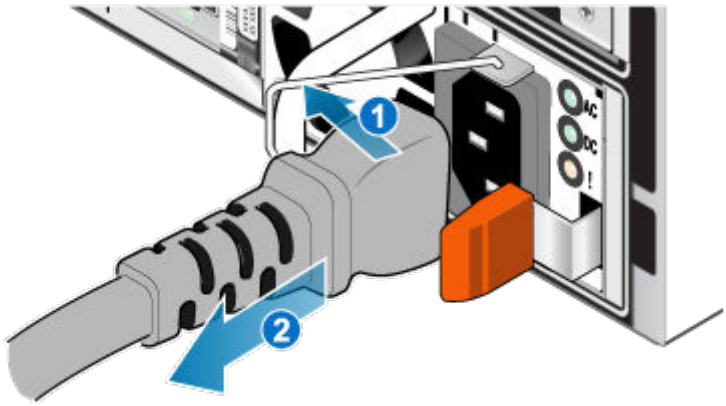

Figure 34. Removing the power cable

2. Push and hold the orange release tab to the left (to the right for the upside-down power supply) and grasp the power supply by its handle. Remove the power supply by pulling it from the SP assembly.

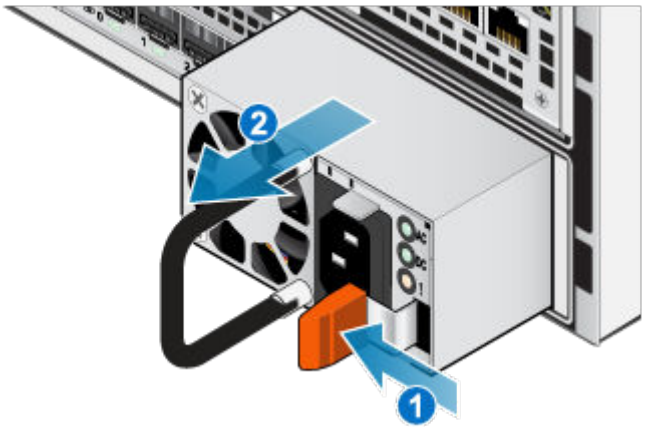

Figure 35. Removing a power supply

Install a power supply

About this task

The power supplies are installed in the top and bottom SP assemblys, meaning that the top power supply is installed upside-down. This procedure works for installing either power supply.

Steps

1. Align the power supply with the slot in the SP assembly. The power cable retention bail will be on the right for the bottom power supply and on the left for the top power supply.
2. Push the power supply into the SP assembly until it clicks into place.

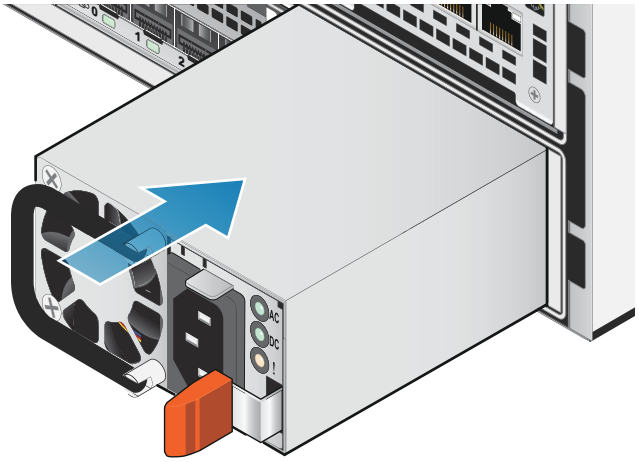

Figure 36. Installing a power supply

3. Connect the power cable to the power supply and secure the cord with the retention bail at the connector.

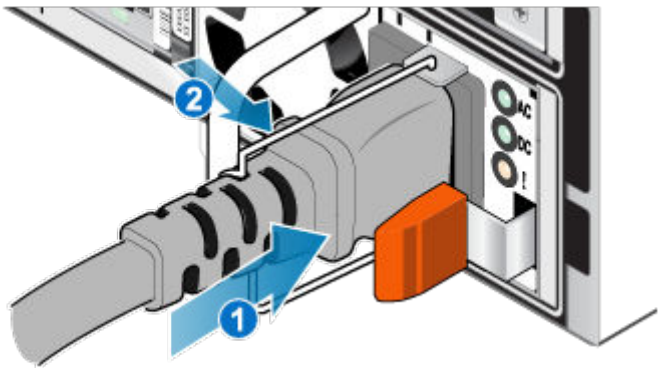

Figure 37. Inserting the power cable

Verifying the operation of the new part in Unisphere

Verify that the new part is recognized by your system, and operating correctly.

Steps

1. In Unisphere, select **System View**.
2. On the **Summary** page, confirm that the system status is OK.
3. Select the **Enclosures** page.
4. Verify that the part appears with the OK status in the enclosure view. You may need to refresh Unisphere by clicking on the refresh icon next to the **Enclosures** view.

   If the system health monitor shows the part as faulted, contact your service provider.

Returning a faulted part

About this task

We appreciate the return of defective material within 5 business days (for US returns). For International customers, please return defective material within 5-10 business days. All instructions and material required to return your defective part were supplied with your good part shipment.

Steps

1. Package the faulted part in the shipping box that contained the replacement part, and seal the box.
2. Ship the failed part to your service provider as described in the instructions that were included with the replacement part.
3. Optional: For more information about returning customer-replaceable parts, from Unisphere, click **Support** > **Replace Disk Drives, Power Supplies, and Other Parts** > **Return a Part** to display the part return instructions.
   If your screen does not show the **Return a Part** option, contact your service provider for instructions on what to do next.

Replace an embedded module

Take the following actions to remove the faulted embedded module and install the replacement embedded module into the system.

Identifying and locating the faulted part in Unisphere

Before you replace a faulted part, locate its placement within the storage system.

Steps

1. In Unisphere, select **System View**.
2. Select the **Enclosures** page.
3. Locate the faulted part marked orange, and displayed in the **Enclosures** view.

Place SP A into Reset and Hold

About this task

Reset and hold is a special state during which power is maintained to the SP assembly so that I/O modules, embedded modules, and 4-port cards can be safely removed. This state has fewer management capabilities than Service Mode, but allows for easier I/O module, embedded module and 4-port card replacement.

NOTE: Both SP assemblies must NOT be in reset and hold simultaneously. The system should be up for at least 40 minutes since its last reboot before being placed into reset and hold.

NOTE: Do not add or reseat NVMe Flash drives when the system is in the reset and hold state.

Steps

1. Open Unisphere and select **Service**, then **Service Tasks**.
2. Under the name of the SP assembly where you will install the new I/O module, embedded module or 4-port card, select **Reset and Hold** and then click **Execute**.
3. When prompted, type the service password to put the SP assembly into reset and hold.
4. Optional: Either refresh the browser or follow the onscreen instructions to restore full-functionality to Unisphere.

   When placing the primary storage processor into hold in reset, Unisphere becomes momentarily unresponsive as the management services transfer over to the other SP. After about 10 minutes, the SP assembly's status will change to Degraded, and indicate that the SP assembly has been placed in held in reset. The SP assembly's status can be confirmed by checking the log entries in Unisphere under **Events** > **Alerts**.
5. Wait until the SP assembly fault LED and power indicator LED are lit solid amber and green, respectively, and the peer SP assembly's Unsafe to Remove LED is lit before moving to the next task.

Embedded module LEDs

Use the fault LEDs to identify the faulted part.

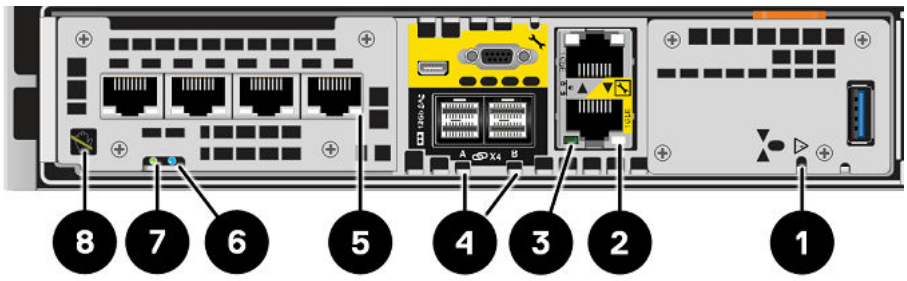

Figure 38. Embedded module LEDs

Table 8. Embedded module LEDs

LED	Location	State	Description
Embedded module fault	1	Amber	Embedded module has faulted.

Table 8. Embedded module LEDs (continued)

LED	Location	State	Description
		Off	No fault has occurred, normal operation.
Ethernet port link	2	Green	Link established.
		Off	No link established.
Ethernet port activity	3	Amber blinking	Port activity.
		Off	No port activity.
SAS port/activity Link	4	Blue	SAS port link is up.
		Off	No link established.
Port link	5	Green	Link up with high speed.
		Amber	Link up with degraded speed.
		Off	Link down.
Node fault	6	Amber	Fault has occurred.
		Blue	Node in Degraded Mode.
		Amber or blue blinking	The system is booting.
		Blue and amber alternating (green for 3 seconds)	System uninitialized. A management IP address has not been assigned.
		Blue and amber alternating at one second intervals	Node in Service Mode.
		Off	No fault has occurred, normal operation.
Storage processor assembly power	7	Green	Node is on (main power).
		Green blinking	Node is initializing a serial over LAN session.
		Off	Node is off.
Unsafe to remove	8	White	Do not remove the node. Improper removal could cause data loss.
		Off	Safe to remove the node or embedded module when the node or embedded module has been properly prepared.

Remove a faulted embedded module

Steps

1. Label and disconnect all cables attached to the embedded module.
2. Push the orange tab to release the lever.

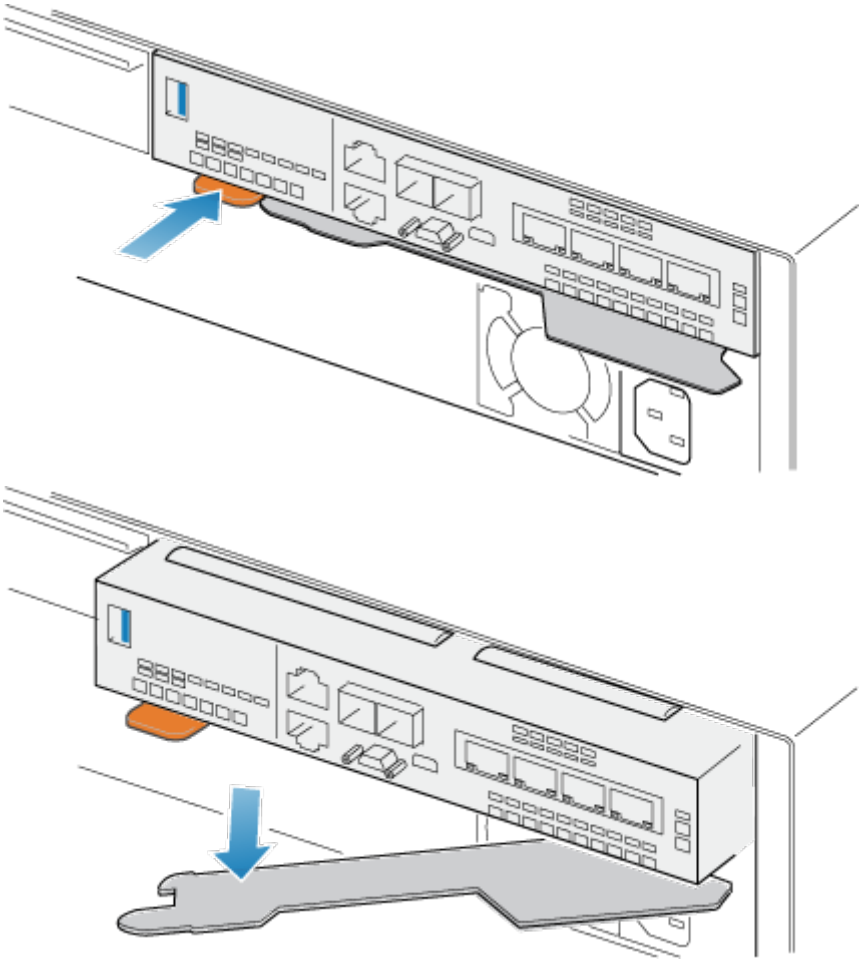

Figure 39. Releasing the lever on the embedded module

3. Pull the release lever away from the system. The embedded module releases from the system as you pull the lever.

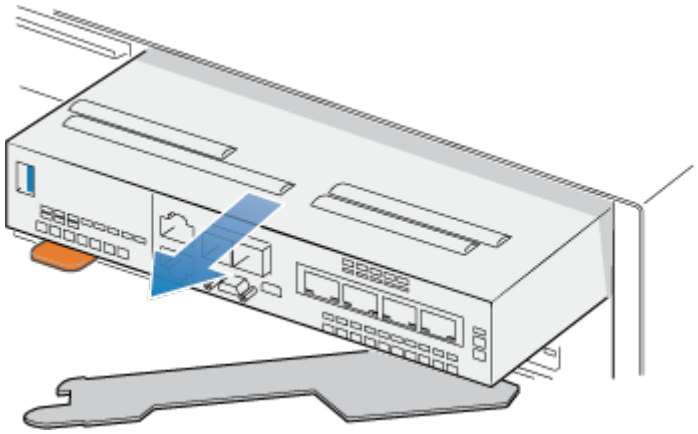

Figure 40. Removing the embedded module from the system

4. Remove the embedded module from the slot.

Transfer the 4-port card

If you are replacing the embedded module, remove the 4-port card from the old embedded module and install it into the new embedded module. Do not transfer the 4-port card while replacing a SP assembly.

Remove a 4-port card

Steps

1. Remove the SFPs from the front of the embedded module.
2. Remove both air dams at the front of the embedded module by loosening the captive screws.
3. Push down the two blue tabs on the back of the 4-port card to release the 4-port card.

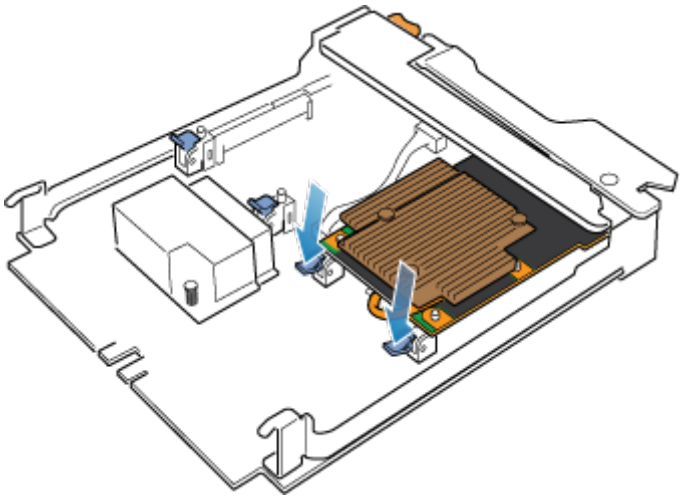

Figure 41. Opening the retaining tabs

4. Lift the 4-port card off the pegs, and pull the 4-port card away from the embedded module.

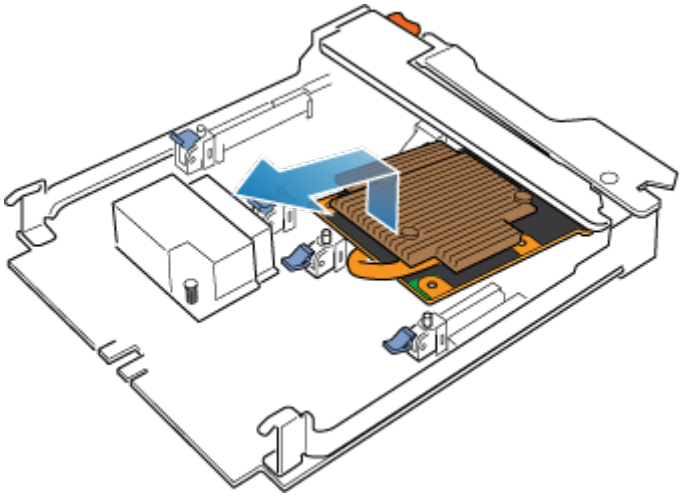

Figure 42. Removing the 4-port card

Install a 4-port card

Steps

1. Align the 4-port card in the embedded module so that the ports on the front line up with the slots on the front of the embedded module.

2. Align the white pegs beneath the holes on the 4-port card.

CAUTION: Do not force the 4-port card into place. If the 4-port card does not smoothly seat, realign the pegs and try again.

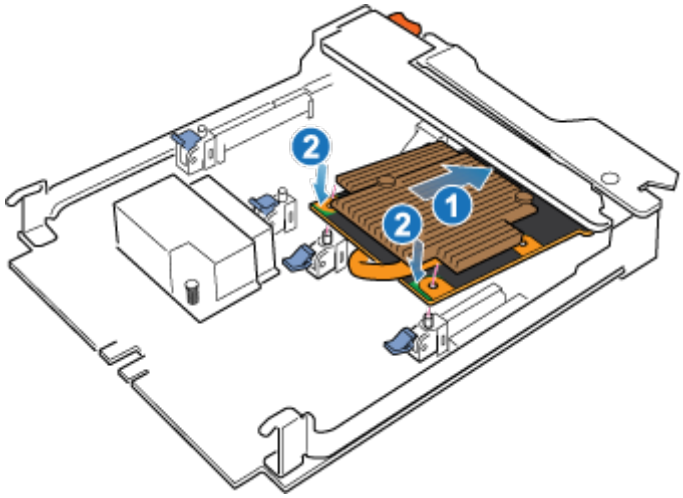

Figure 43. Seating the 4-port card

3. Gently push down on the upper-left circle on the 4-port card.
4. Push up on the blue tabs until they lock into place.

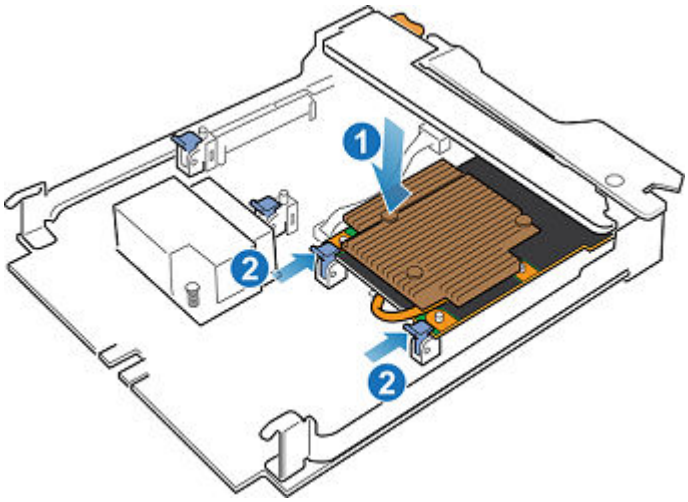

Figure 44. Locking the 4-port card into position

5. Replace both air dams and tighten the captive screws.
6. Install the SFPs into the embedded module.

Install an embedded module

Steps

1. Align the embedded module with the empty slot and carefully push it into the slot.

   As the embedded module is installed, the release lever rotates inward.

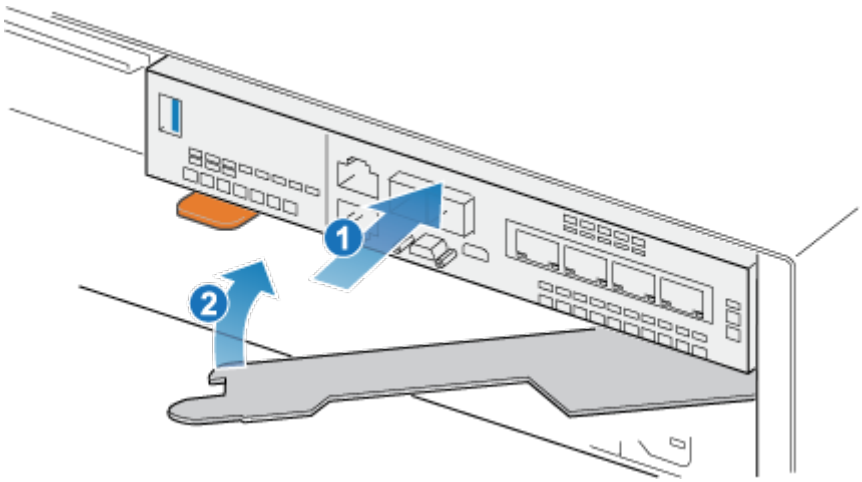

Figure 45. Installing the embedded module

2. When the embedded module is fully seated, push the release lever back into the system until the orange tab locks the lever in place.

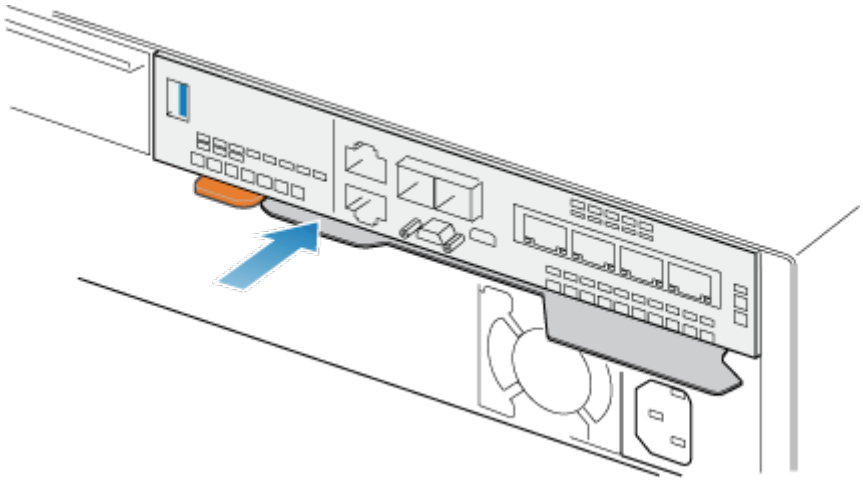

Figure 46. Locking the release lever

3. Connect each cable into the same port from which it was removed.

Rebooting a SP assembly into Normal Mode

Prerequisites

Ensure that the replacement I/O module, embedded module, or 4-port card has been correctly installed using Unisphere. The replaced part's status indicates that the module is powered off and will power on during the next system reboot.

About this task

Reboot the recently serviced SP assembly into Normal Mode using the procedure that follows:

Steps

1. Open Unisphere and select **Service**, then **Service Tasks**.
2. Under the name of the storage processor where you installed the new I/O module, embedded module, or 4-port card, select **Reboot** and click **Execute**.
3. When prompted, type the Service Password to put the SP assembly into Normal Mode.

   It may take up to 15 minutes for the system to complete its reboot to return to normal mode.

Verifying the operation of the new part in Unisphere

Verify that the new part is recognized by your system, and operating correctly.

Steps

1. In Unisphere, select **System View**.
2. On the **Summary** page, confirm that the system status is OK.
3. Select the **Enclosures** page.
4. Verify that the part appears with the OK status in the enclosure view. You may need to refresh Unisphere by clicking on the refresh icon next to the **Enclosures** view.

   If the system health monitor shows the part as faulted, contact your service provider.

Add a 4-port card

Take the these actions to install a new 4-port card into the system.

When adding a 4-port card to the system, you must add a 4-port card to both SP A and SP B. You will add the card to SP A, re-install the embedded module, and then reboot SP A into normal mode. Once that is completed, you will repeat this procedure for SP B.

Procedural overview:

1. Place SP A into reset and hold.
2. Locate the slot for the new 4-port card on SP A.
3. Remove the embedded module.
4. Install the new 4-port card.
5. Replace the embedded module.
6. Reboot SP A into normal mode.
7. Repeat steps 1-6 for SP B.

Add a 4-port card to SP A

Procedure overview:

1. Place SP A into reset and hold.
2. Locate the slot for the new 4-port card on SP A.
3. Remove the embedded module.
4. Install the new 4-port card.
5. Replace the embedded module.
6. Reboot SP A into normal mode.

Place SP A into Reset and Hold

About this task

Reset and hold is a special state during which power is maintained to the SP assembly so that I/O modules, embedded modules, and 4-port cards can be safely removed. This state has fewer management capabilities than Service Mode, but allows for easier I/O module, embedded module and 4-port card replacement.

NOTE: Both SP assemblies must NOT be in reset and hold simultaneously. The system should be up for at least 40 minutes since its last reboot before being placed into reset and hold.

NOTE: Do not add or reseat NVMe Flash drives when the system is in the reset and hold state.

Steps

1. Open Unisphere and select **Service**, then **Service Tasks**.

2. Under the name of the SP assembly where you will install the new I/O module, embedded module or 4-port card, select **Reset and Hold** and then click **Execute**.
3. When prompted, type the service password to put the SP assembly into reset and hold.
4. Optional: Either refresh the browser or follow the onscreen instructions to restore full-functionality to Unisphere.

   When placing the primary storage processor into hold in reset, Unisphere becomes momentarily unresponsive as the management services transfer over to the other SP. After about 10 minutes, the SP assembly's status will change to Degraded, and indicate that the SP assembly has been placed in held in reset. The SP assembly's status can be confirmed by checking the log entries in Unisphere under **Events** > **Alerts**.
5. Wait until the SP assembly fault LED and power indicator LED are lit solid amber and green, respectively, and the peer SP assembly's Unsafe to Remove LED is lit before moving to the next task.

Remove an embedded module

Steps

1. Label and disconnect all cables attached to the embedded module.
2. Push the orange tab to release the lever.

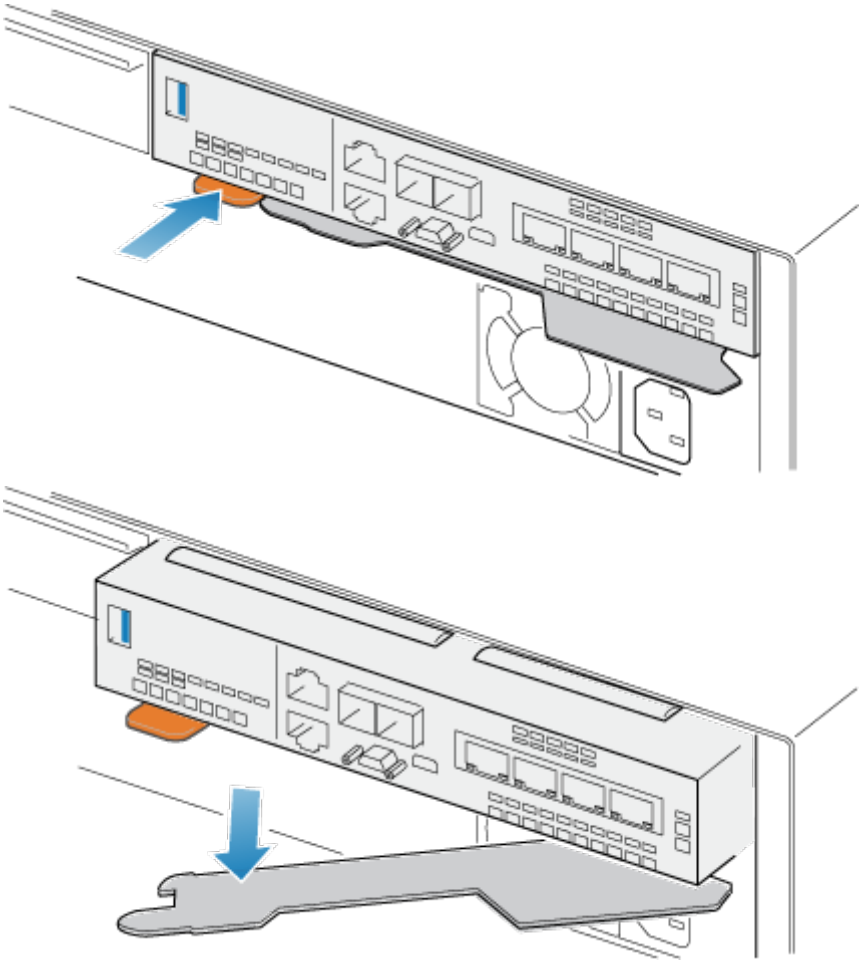

Figure 47. Releasing the lever on the embedded module

3. Pull the release lever away from the system. The embedded module releases from the system as you pull the lever.

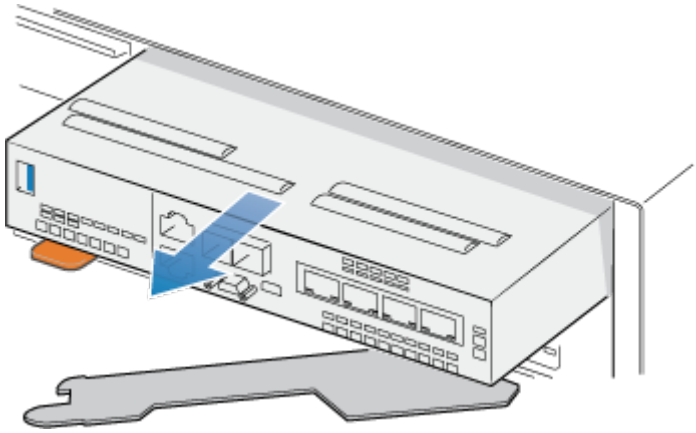

Figure 48. Removing the embedded module from the system

4. Remove the embedded module from the slot.

Identify the location for the new 4-port card

Ensure that you install the new 4-port card in the correct location.

Install the new 4-port card in slot 0 within the embedded module. When looking at the embedded module from the front, slot 0 is on the left side of the embedded module.

Install a 4-port card

Steps

1. Remove the air dam at the front of the embedded module.
2. Align the 4-port card in the embedded module so that the ports on the front line up with the slots on the front of the embedded module.
3. Align the white pegs beneath the holes on the 4-port card.

CAUTION: Do not force the 4-port card into place. If the 4-port card does not smoothly seat, realign the pegs and try again.

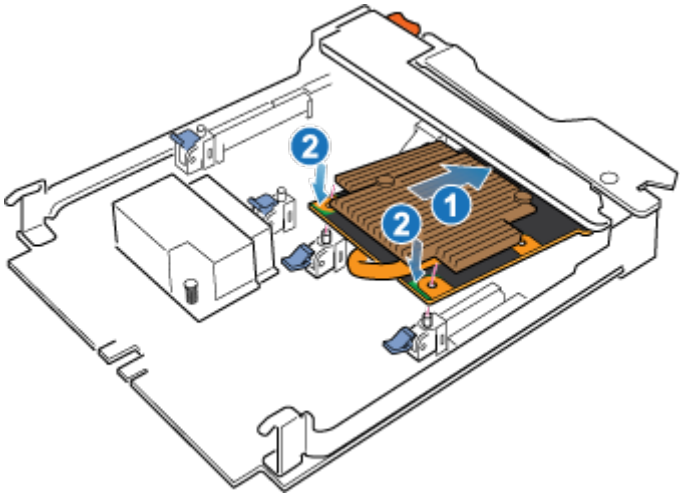

Figure 49. Seating the 4-port card

4. Gently push down on the upper-left circle on the 4-port card.
5. Push up on the blue tabs until they lock into place.

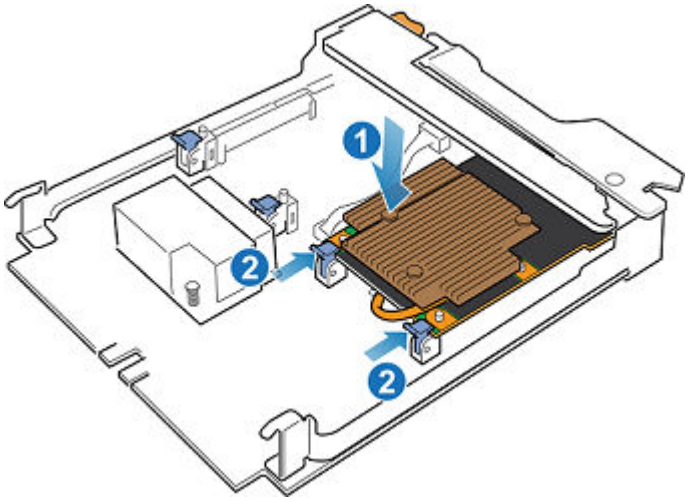

Figure 50. Locking the 4-port card into position

6. Install the air dam that came with the 4-port card, and tighten the four captive screws.
7. If the 4-port card includes SFPs, install them into the embedded module.

Install an embedded module

Steps

1. Align the embedded module with the empty slot and carefully push it into the slot.

   As the embedded module is installed, the release lever rotates inward.

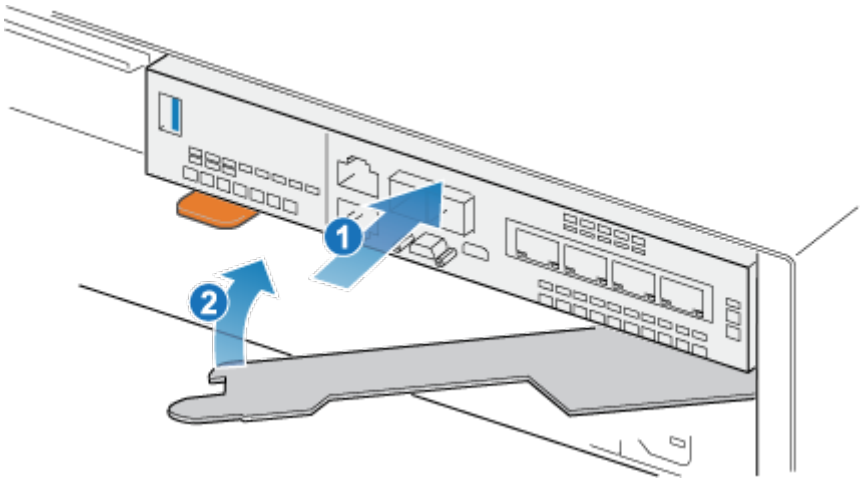

Figure 51. Installing the embedded module

2. When the embedded module is fully seated, push the release lever back into the system until the orange tab locks the lever in place.

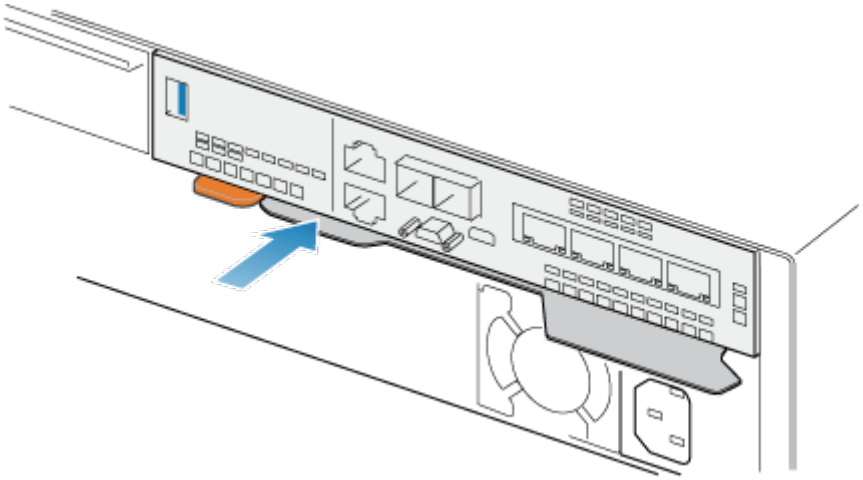

Figure 52. Locking the release lever

3. Connect each cable into the same port from which it was removed.

Rebooting a SP assembly into Normal Mode

Prerequisites

Ensure that the replacement I/O module, embedded module, or 4-port card has been correctly installed using Unisphere. The replaced part's status indicates that the module is powered off and will power on during the next system reboot.

About this task

Reboot the recently serviced SP assembly into Normal Mode using the procedure that follows:

Steps

1. Open Unisphere and select **Service**, then **Service Tasks**.
2. Under the name of the storage processor where you installed the new I/O module, embedded module, or 4-port card, select **Reboot** and click **Execute**.
3. When prompted, type the Service Password to put the SP assembly into Normal Mode.

   It may take up to 15 minutes for the system to complete its reboot to return to normal mode.

Adding the 4-port card to SP B

About this task

You have completed the addition of the 4-port card to SP A. Now you are ready to add the other 4-port card to SP B by repeating the tasks that you just performed for SP A.

NOTE: Ensure that you install the 4-port card in the same slot on SP B that was used on SP A.

Steps

1. Place SP B into reset and hold.
2. Locate the slot for the new 4-port card on SP B.
3. Remove the embedded module.
4. Install the new 4-port card.
5. Replace the embedded module.
6. Reboot SP B into normal mode.

Committing the new I/O ports

About this task

You must commit the new I/O ports before they can be used.

Steps

1. In Unisphere, select **System View**.
2. Select the DPE and select **Commit IO Ports**.

   NOTE: Committing I/O ports requires multiple reboots of the SPs and may take up to an hour to complete. You can find I/O ports commit and SP reboot status details on **Service** > **Logs**. During these reboots you will temporarily lose Unisphere connectivity.

   After this process completes, the new I/O ports have been successfully committed into the system.

   If the commit of the new I/O ports fails, please wait 15 minutes for the system to fully boot and then re-attempt the commit process.

Verifying the operation of the new part in Unisphere

Verify that the new part is recognized by your system, and operating correctly.

Steps

1. In Unisphere, select **System View**.
2. On the **Summary** page, confirm that the system status is OK.
3. Select the **Enclosures** page.
4. Verify that the part appears with the OK status in the enclosure view. You may need to refresh Unisphere by clicking on the refresh icon next to the **Enclosures** view.

   If the system health monitor shows the part as faulted, contact your service provider.

Replace a 4-port card

Take the following actions to remove the 4-port card and install the replacement 4-port card into the system.

Identifying and locating the faulted part in Unisphere

Before you replace a faulted part, locate its placement within the storage system.

Steps

1. In Unisphere, select **System View**.
2. Select the **Enclosures** page.
3. Locate the faulted part marked orange, and displayed in the **Enclosures** view.

Place SP A into Reset and Hold

About this task

Reset and hold is a special state during which power is maintained to the SP assembly so that I/O modules, embedded modules, and 4-port cards can be safely removed. This state has fewer management capabilities than Service Mode, but allows for easier I/O module, embedded module and 4-port card replacement.

NOTE: Both SP assemblies must NOT be in reset and hold simultaneously. The system should be up for at least 40 minutes since its last reboot before being placed into reset and hold.

NOTE: Do not add or reseat NVMe Flash drives when the system is in the reset and hold state.

Steps

1. Open Unisphere and select **Service**, then **Service Tasks**.
2. Under the name of the SP assembly where you will install the new I/O module, embedded module or 4-port card, select **Reset and Hold** and then click **Execute**.
3. When prompted, type the service password to put the SP assembly into reset and hold.
4. Optional: Either refresh the browser or follow the onscreen instructions to restore full-functionality to Unisphere.

   When placing the primary storage processor into hold in reset, Unisphere becomes momentarily unresponsive as the management services transfer over to the other SP. After about 10 minutes, the SP assembly's status will change to Degraded, and indicate that the SP assembly has been placed in held in reset. The SP assembly's status can be confirmed by checking the log entries in Unisphere under **Events** > **Alerts**.
5. Wait until the SP assembly fault LED and power indicator LED are lit solid amber and green, respectively, and the peer SP assembly's Unsafe to Remove LED is lit before moving to the next task.

Embedded module LEDs

Use the fault LEDs to identify the faulted part.

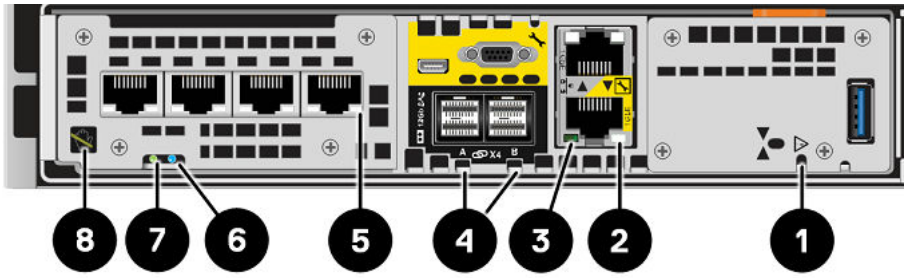

Figure 53. Embedded module LEDs

Table 9. Embedded module LEDs

LED	Location	State	Description
Embedded module fault	1	Amber	Embedded module has faulted.
		Off	No fault has occurred, normal operation.
Ethernet port link	2	Green	Link established.
		Off	No link established.
Ethernet port activity	3	Amber blinking	Port activity.
		Off	No port activity.
SAS port/activity Link	4	Blue	SAS port link is up.
		Off	No link established.
Port link	5	Green	Link up with high speed.
		Amber	Link up with degraded speed.
		Off	Link down.
Node fault	6	Amber	Fault has occurred.
		Blue	Node in Degraded Mode.
		Amber or blue blinking	The system is booting.

Table 9. Embedded module LEDs (continued)

LED	Location	State	Description
		Blue and amber alternating (green for 3 seconds)	System uninitialized. A management IP address has not been assigned.
		Blue and amber alternating at one second intervals	Node in Service Mode.
		Off	No fault has occurred, normal operation.
Storage processor assembly power	7	Green	Node is on (main power).
		Green blinking	Node is initializing a serial over LAN session.
		Off	Node is off.
Unsafe to remove	8	White	Do not remove the node. Improper removal could cause data loss.
		Off	Safe to remove the node or embedded module when the node or embedded module has been properly prepared.

Remove an embedded module

Steps

1. Label and disconnect all cables attached to the embedded module.
2. Push the orange tab to release the lever.

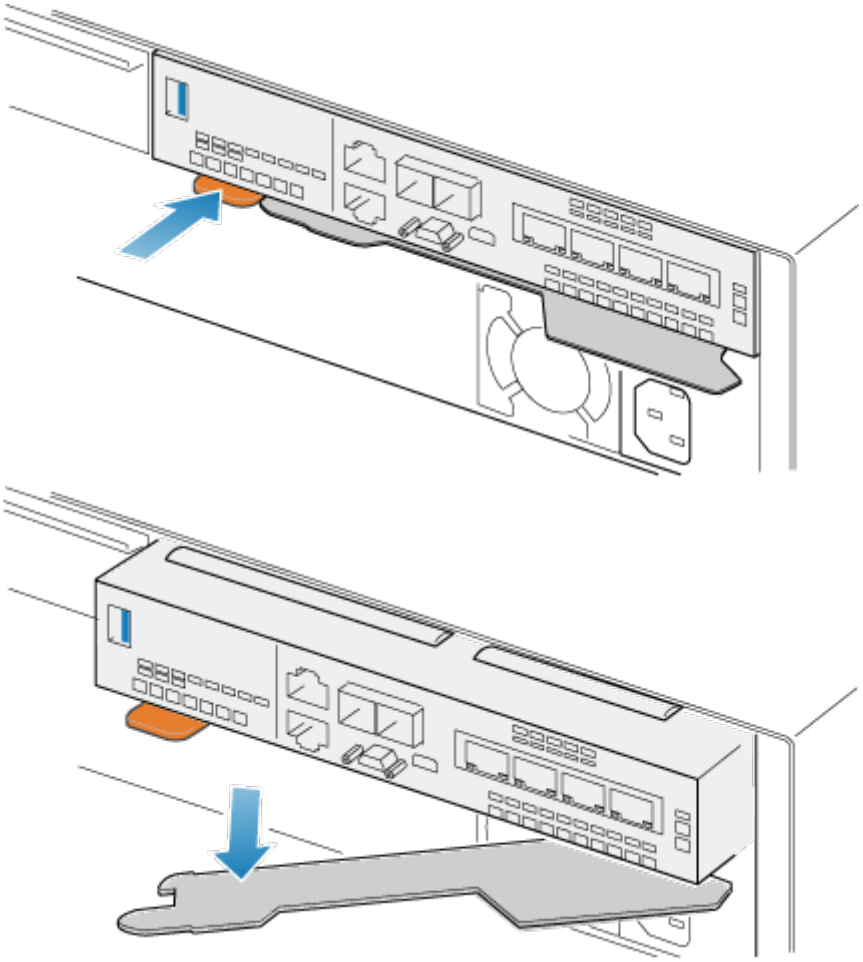

Figure 54. Releasing the lever on the embedded module

3. Pull the release lever away from the system. The embedded module releases from the system as you pull the lever.

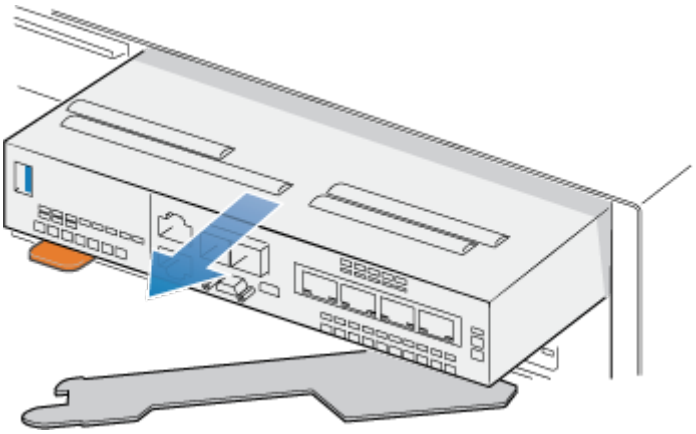

Figure 55. Removing the embedded module from the system

4. Remove the embedded module from the slot.

Remove a 4-port card

Steps

1. Remove the SFPs from the front of the embedded module.

2. Remove both air dams at the front of the embedded module by loosening the captive screws.
3. Push down the two blue tabs on the back of the 4-port card to release the 4-port card.

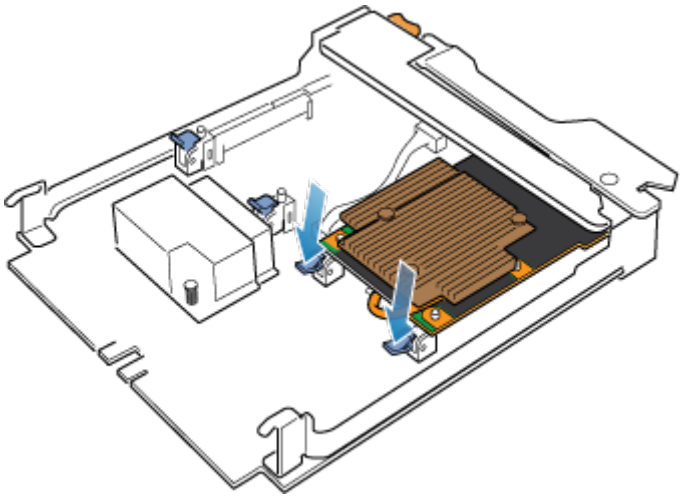

Figure 56. Opening the retaining tabs

4. Lift the 4-port card off the pegs, and pull the 4-port card away from the embedded module.

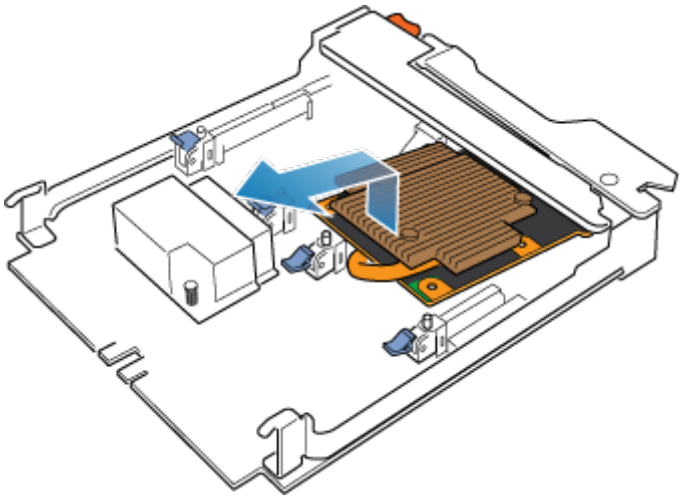

Figure 57. Removing the 4-port card

Install a 4-port card

Steps

1. Align the 4-port card in the embedded module so that the ports on the front line up with the slots on the front of the embedded module.
2. Align the white pegs beneath the holes on the 4-port card.

CAUTION: Do not force the 4-port card into place. If the 4-port card does not smoothly seat, realign the pegs and try again.

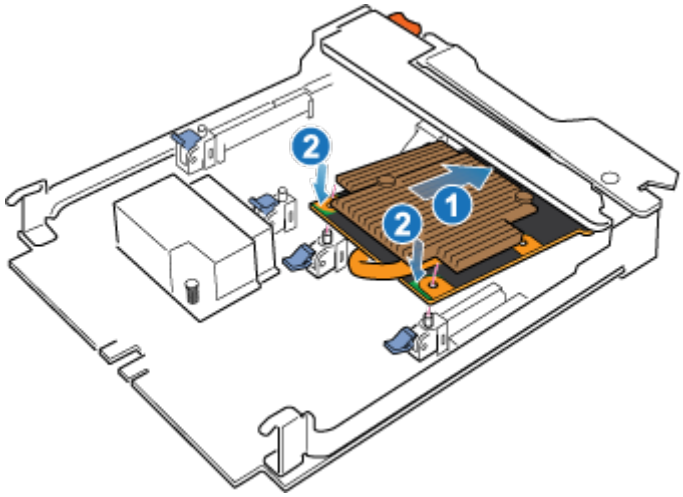

Figure 58. Seating the 4-port card

3. Gently push down on the upper-left circle on the 4-port card.
4. Push up on the blue tabs until they lock into place.

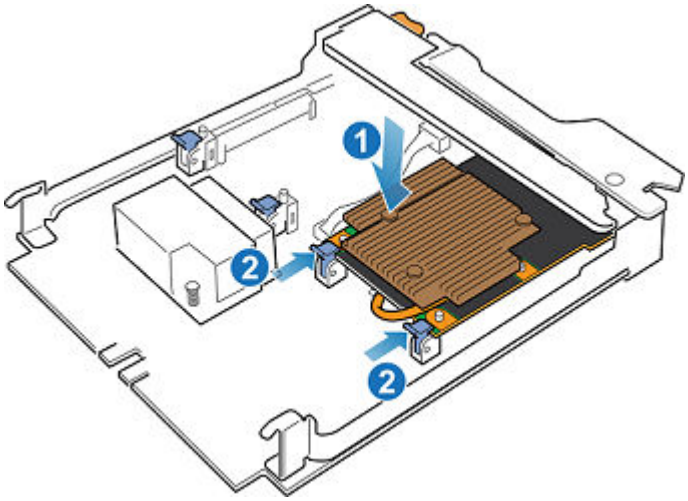

Figure 59. Locking the 4-port card into position

5. Replace both air dams and tighten the captive screws.
6. Install the SFPs into the embedded module.

Install an embedded module

Steps

1. Align the embedded module with the empty slot and carefully push it into the slot.

   As the embedded module is installed, the release lever rotates inward.

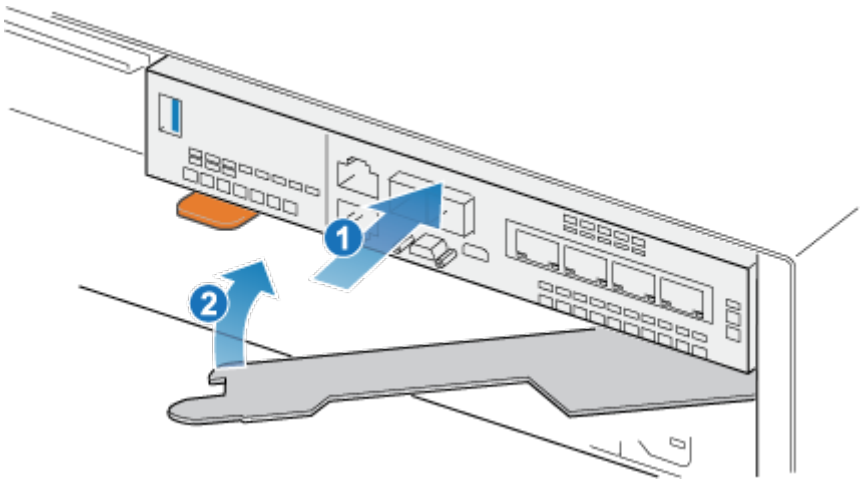

Figure 60. Installing the embedded module

2. When the embedded module is fully seated, push the release lever back into the system until the orange tab locks the lever in place.

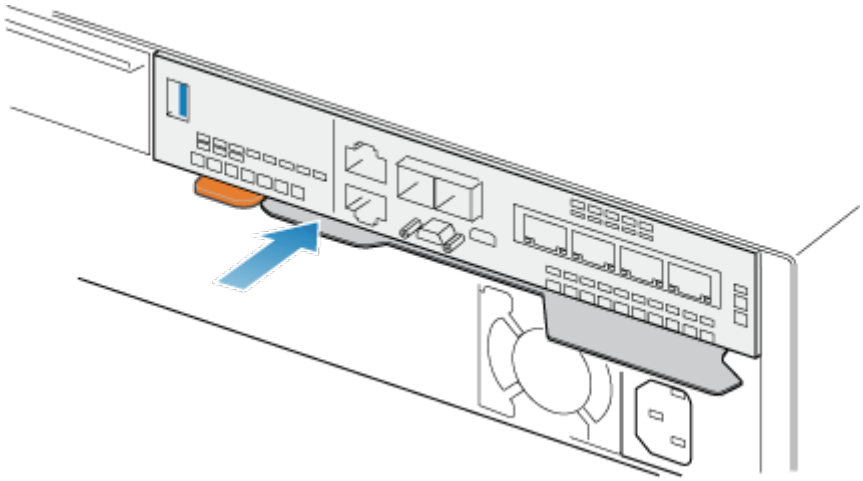

Figure 61. Locking the release lever

3. Connect each cable into the same port from which it was removed.

Rebooting a SP assembly into Normal Mode

Prerequisites

Ensure that the replacement I/O module, embedded module, or 4-port card has been correctly installed using Unisphere. The replaced part's status indicates that the module is powered off and will power on during the next system reboot.

About this task

Reboot the recently serviced SP assembly into Normal Mode using the procedure that follows:

Steps

1. Open Unisphere and select **Service**, then **Service Tasks**.
2. Under the name of the storage processor where you installed the new I/O module, embedded module, or 4-port card, select **Reboot** and click **Execute**.
3. When prompted, type the Service Password to put the SP assembly into Normal Mode.

   It may take up to 15 minutes for the system to complete its reboot to return to normal mode.

Verifying the operation of the new part in Unisphere

Verify that the new part is recognized by your system, and operating correctly.

Steps

1. In Unisphere, select **System View**.
2. On the **Summary** page, confirm that the system status is OK.
3. Select the **Enclosures** page.
4. Verify that the part appears with the OK status in the enclosure view. You may need to refresh Unisphere by clicking on the refresh icon next to the **Enclosures** view.

   If the system health monitor shows the part as faulted, contact your service provider.

Add an SFP

Take the following actions to add a new SFP into the system.

Install an SFP module

Steps

1. Push the spring release latch up and slide the SFP module into the port until it is securely connected.

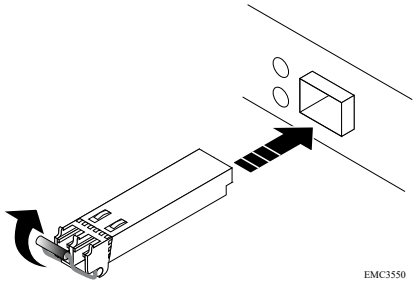

Figure 62. Installing an SFP module

2. Push the spring release down to lock the SFP module into place.
3. Reconnect the cable to the SFP module.

Example

Committing the new I/O ports

About this task

You must commit the new I/O ports before they can be used.

Steps

1. In Unisphere, select **System View**.
2. Select the DPE and select **Commit IO Ports**.

   NOTE: Committing I/O ports requires multiple reboots of the SPs and may take up to an hour to complete. You can find I/O ports commit and SP reboot status details on **Service** > **Logs**. During these reboots you will temporarily lose Unisphere connectivity.

   After this process completes, the new I/O ports have been successfully committed into the system.

If the commit of the new I/O ports fails, please wait 15 minutes for the system to fully boot and then re-attempt the commit process.

Verifying the operation of the new part in Unisphere

Verify that the new part is recognized by your system, and operating correctly.

Steps

1. In Unisphere, select **System View**.
2. On the **Summary** page, confirm that the system status is OK.
3. Select the **Enclosures** page.
4. Verify that the part appears with the OK status in the enclosure view. You may need to refresh Unisphere by clicking on the refresh icon next to the **Enclosures** view.

   If the system health monitor shows the part as faulted, contact your service provider.

Replace a faulted SFP

Take the following actions to remove the faulted SFP and install the replacement SFP into the system.

Identifying and locating the faulted part in Unisphere

Before you replace a faulted part, locate its placement within the storage system.

Steps

1. In Unisphere, select **System View**.
2. Select the **Enclosures** page.
3. Locate the faulted part marked orange, and displayed in the **Enclosures** view.

Remove an SFP module

Steps

1. If a cable is connected to the SFP, disconnect the cable.
2. Gently pull down on the spring release latch.
3. While still holding onto the latch, gently pull out the SFP module.

   CAUTION: Do not remove the I/O module. Removing the I/O module causes the SP assembly to reboot immediately.

Example

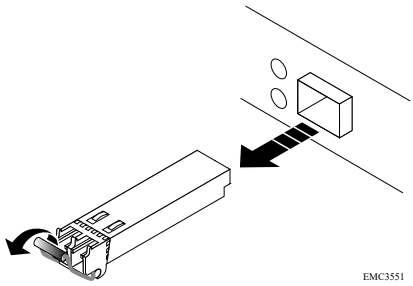

Figure 63. Removing an SFP module

Install an SFP module

Steps

1. Verify that the replacement SFP module has the same part number as the failed SFP module.
   The part number is on a label that is attached to the SFP module.
2. Push the spring release latch up and slide the new SFP module into the port until it is securely connected.

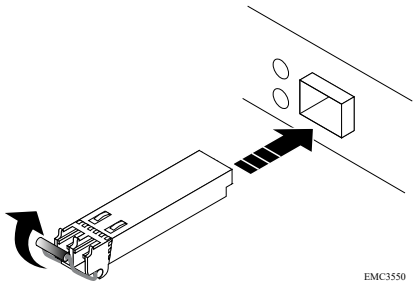

Figure 64. Installing an SFP module

3. Push the spring release down to lock the SFP module into place.
4. Reconnect the cable to the replacement SFP module.

Example

Verifying the operation of the new part in Unisphere

Verify that the new part is recognized by your system, and operating correctly.

Steps

1. In Unisphere, select **System View**.
2. On the **Summary** page, confirm that the system status is OK.
3. Select the **Enclosures** page.
4. Verify that the part appears with the OK status in the enclosure view. You may need to refresh Unisphere by clicking on the refresh icon next to the **Enclosures** view.
   If the system health monitor shows the part as faulted, contact your service provider.

Returning a faulted part

About this task

We appreciate the return of defective material within 5 business days (for US returns). For International customers, please return defective material within 5-10 business days. All instructions and material required to return your defective part were supplied with your good part shipment.

Steps

1. Package the faulted part in the shipping box that contained the replacement part, and seal the box.
2. Ship the failed part to your service provider as described in the instructions that were included with the replacement part.
3. Optional: For more information about returning customer-replaceable parts, from Unisphere, click **Support** > **Replace Disk Drives, Power Supplies, and Other Parts** > **Return a Part** to display the part return instructions.
   If your screen does not show the **Return a Part** option, contact your service provider for instructions on what to do next.

Replace an I/O module

Take the following actions to remove the faulted I/O module and install the replacement I/O module into the system.

Identifying and locating the faulted part in Unisphere

Before you replace a faulted part, locate its placement within the storage system.

Steps

1. In Unisphere, select **System View**.
2. Select the **Enclosures** page.
3. Locate the faulted part marked orange, and displayed in the **Enclosures** view.

Place SP A into Reset and Hold

About this task

Reset and hold is a special state during which power is maintained to the SP assembly so that I/O modules, embedded modules, and 4-port cards can be safely removed. This state has fewer management capabilities than Service Mode, but allows for easier I/O module, embedded module and 4-port card replacement.

NOTE: Both SP assemblies must NOT be in reset and hold simultaneously. The system should be up for at least 40 minutes since its last reboot before being placed into reset and hold.

NOTE: Do not add or reseat NVMe Flash drives when the system is in the reset and hold state.

Steps

1. Open Unisphere and select **Service**, then **Service Tasks**.
2. Under the name of the SP assembly where you will install the new I/O module, embedded module or 4-port card, select **Reset and Hold** and then click **Execute**.
3. When prompted, type the service password to put the SP assembly into reset and hold.
4. Optional: Either refresh the browser or follow the onscreen instructions to restore full-functionality to Unisphere.

   When placing the primary storage processor into hold in reset, Unisphere becomes momentarily unresponsive as the management services transfer over to the other SP. After about 10 minutes, the SP assembly's status will change to Degraded, and indicate that the SP assembly has been placed in held in reset. The SP assembly's status can be confirmed by checking the log entries in Unisphere under **Events** > **Alerts**.
5. Wait until the SP assembly fault LED and power indicator LED are lit solid amber and green, respectively, and the peer SP assembly's Unsafe to Remove LED is lit before moving to the next task.

Base enclosure 4-port I/O module LEDs

Use the fault LEDs to identify the faulted part.

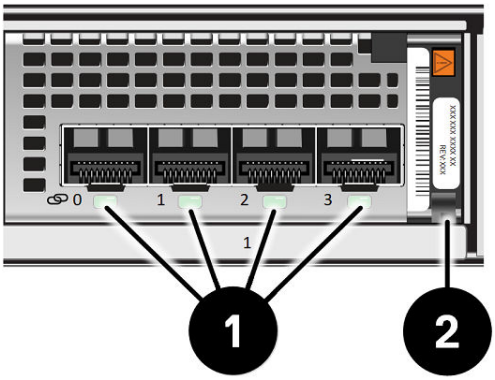

Figure 65. Base enclosure 4-port I/O module LEDs

Table 10. Base enclosure 4-port I/O module LEDs

LED	Location	State	Description
Port link	1	Green or blue	Link up
		Off	Link down
Power fault	2	Green	Power on
		Amber	Power fault

Remove a faulted I/O module

Steps

1. Pull the trigger mechanism on the I/O module handle to release it.

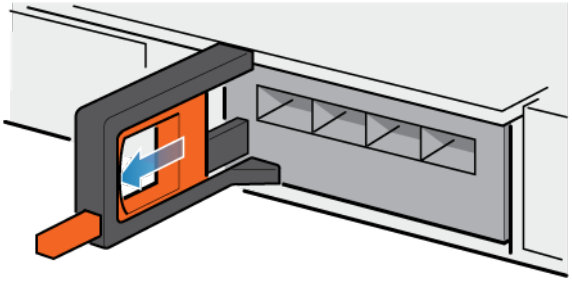

Figure 66. Releasing the I/O module

2. Gently pull the I/O module from the slot.

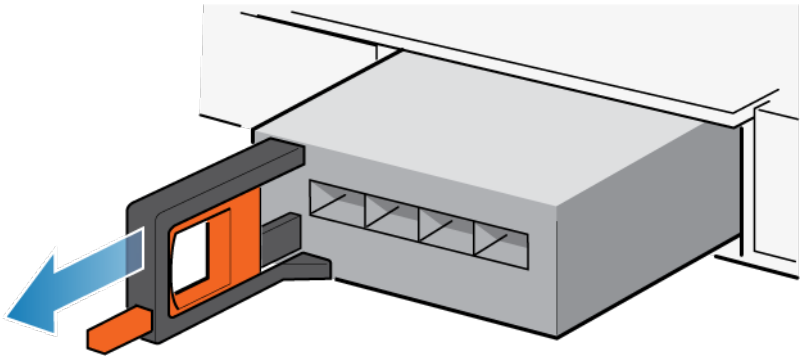

Figure 67. Removing the I/O module

Install an I/O module

Steps

1. Align the module with the empty slot and carefully push the module into the slot.

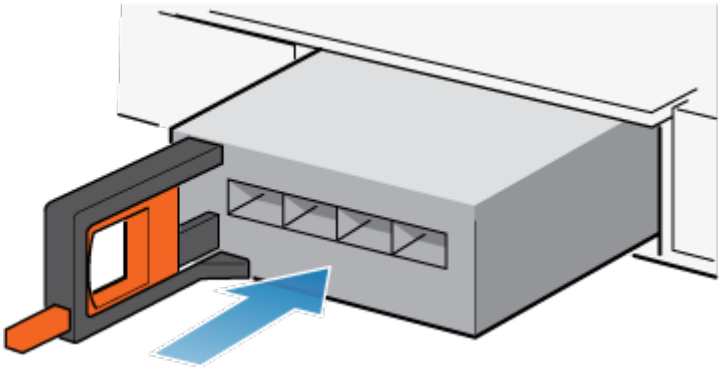

Figure 68. Installing an I/O module

2. When the I/O module appears seated, push and release the small button on the handle.
   - If the button remains in, the module is fully seated.
   - If the button springs back, gently push the module further into the chassis, then push it again.
   - If the button still does not rest flush with its handle, remove the module and repeat steps 1 and 2.

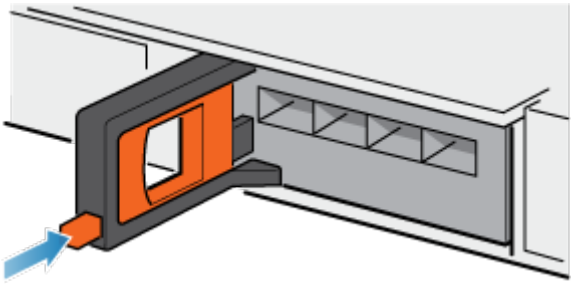

Figure 69. Locking the I/O module into place

3. Connect the cables into the assigned I/O module ports.

Rebooting a SP assembly into Normal Mode

Prerequisites

Ensure that the replacement I/O module, embedded module, or 4-port card has been correctly installed using Unisphere. The replaced part's status indicates that the module is powered off and will power on during the next system reboot.

About this task

Reboot the recently serviced SP assembly into Normal Mode using the procedure that follows:

Steps

1. Open Unisphere and select **Service**, then **Service Tasks**.
2. Under the name of the storage processor where you installed the new I/O module, embedded module, or 4-port card, select **Reboot** and click **Execute**.
3. When prompted, type the Service Password to put the SP assembly into Normal Mode.

   It may take up to 15 minutes for the system to complete its reboot to return to normal mode.

Verifying the operation of the new part in Unisphere

Verify that the new part is recognized by your system, and operating correctly.

Steps

1. In Unisphere, select **System View**.
2. On the **Summary** page, confirm that the system status is OK.
3. Select the **Enclosures** page.
4. Verify that the part appears with the OK status in the enclosure view. You may need to refresh Unisphere by clicking on the refresh icon next to the **Enclosures** view.

   If the system health monitor shows the part as faulted, contact your service provider.

Returning a faulted part

About this task

We appreciate the return of defective material within 5 business days (for US returns). For International customers, please return defective material within 5-10 business days. All instructions and material required to return your defective part were supplied with your good part shipment.

Steps

1. Package the faulted part in the shipping box that contained the replacement part, and seal the box.
2. Ship the failed part to your service provider as described in the instructions that were included with the replacement part.
3. Optional: For more information about returning customer-replaceable parts, from Unisphere, click **Support** > **Replace Disk Drives, Power Supplies, and Other Parts** > **Return a Part** to display the part return instructions.
   If your screen does not show the **Return a Part** option, contact your service provider for instructions on what to do next.

Add an I/O module

Take the following actions to install a new I/O module into the system.

If you are adding a 4-port SAS I/O module and connecting an 80-drive DAE that requires x8 connectivity, insert the SAS cable into the 4-port SAS I/O module before persisting the I/O module. The 4-port SAS I/O module must be persisted with the cable inserted for x8 connectivity.

NOTE: If the SAS back-end I/O module is powered on without any cables inserted, it is automatically set at x4 and cannot be used for x8 lane cabling.

Locating a slot for a new I/O module

Locate the slot with the I/O filler module that you want to replace with the new I/O module.

Remove a filler I/O module

Steps

1. Pull the trigger mechanism on the filler I/O module handle to release it.
2. Gently pull the filler module from the slot.

Install an I/O module

Steps

1. Align the module with the empty slot and carefully push the module into the slot.

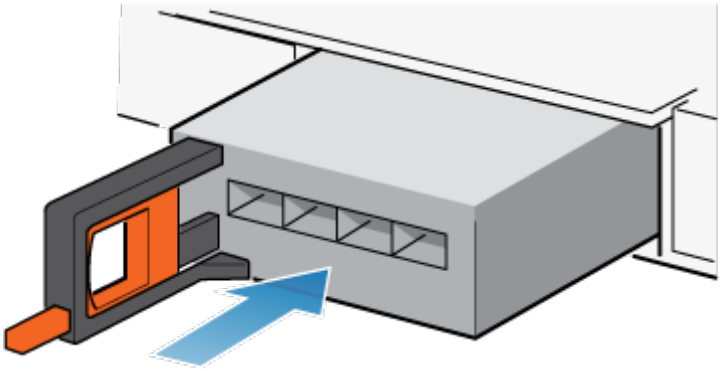

Figure 70. Installing an I/O module

2. When the I/O module appears seated, push and release the small button on the handle.
   - If the button remains in, the module is fully seated.
   - If the button springs back, gently push the module further into the chassis, then push it again.
   - If the button still does not rest flush with its handle, remove the module and repeat steps 1 and 2.

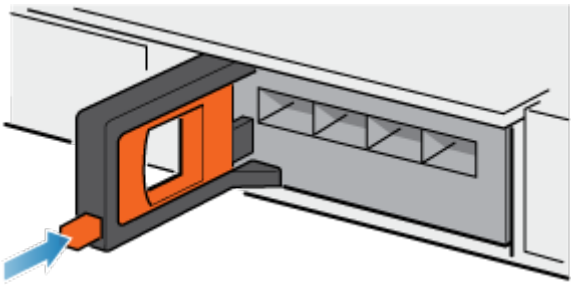

Figure 71. Locking the I/O module into place

3. Connect the cables into the assigned I/O module ports.

Verifying that the new I/O ports are recognized

About this task

Verify that the new I/O ports are recognized by your system and is not faulted using the procedure that follows.

NOTE: Do not attempt to commit the new I/O ports at this time. Wait until directed later in this procedure for the appropriate point to commit both new I/O ports.

Steps

1. Open Unisphere™ and select **System View**.
2. Select the new I/O ports in the the graphical view:

   In the graphical view, the ports should be highlighted yellow.

   If the system health monitor shows the ports as faulted, contact your service provider.

Adding the I/O module to SP B

You have completed the addition of the I/O module to SP A. Now you are ready to add the other I/O module to SP B by repeating the following tasks that you just performed for SP A:

NOTE: Ensure that you install the I/O module in the same slot on SP B that was used on SP A.

1. Locate the slot for the new I/O module.
2. Remove the I/O filler module from the SP B assembly.
3. Unpack the I/O module.
4. Install the I/O module.
5. Verify that the system recognizes the I/O module.

Committing the new I/O ports

About this task

You must commit the new I/O ports before they can be used.

Steps

1. In Unisphere, select **System View**.
2. Select the DPE and select **Commit IO Ports**.

   NOTE: Committing I/O ports requires multiple reboots of the SPs and may take up to an hour to complete. You can find I/O ports commit and SP reboot status details on **Service** > **Logs**. During these reboots you will temporarily lose Unisphere connectivity.

   After this process completes, the new I/O ports have been successfully committed into the system.

   If the commit of the new I/O ports fails, please wait 15 minutes for the system to fully boot and then re-attempt the commit process.

Replace a fan module

Take the following actions to remove the faulted fan module and install the replacement fan module into the system.

Identifying and locating the faulted part in Unisphere

Before you replace a faulted part, locate its placement within the storage system.

Steps

1. In Unisphere, select **System View**.
2. Select the **Enclosures** page.
3. Locate the faulted part marked orange, and displayed in the **Enclosures** view.

Preparing the storage processor (SP) for service

About this task

To protect your system from accidental data loss during this maintenance activity, prepare the SP for service. You prepare the SP for service by putting it in Service Mode.

Entering Service Mode stops I/O on the SP so that service tasks can be safely performed.

NOTE: Both SPs must NOT be in Service Mode at the same time.

Steps

1. Open Unisphere and select **Service**, then **Service Tasks**.
2. Under the name of the storage processor where you install the new part, select **Enter Service Mode**, and then click **Execute**.
3. When prompted, enter the Service Password to put the SP into Service Mode.
4. Optional: Either refresh your browser or follow the on-screen instructions to restore full-functionality to Unisphere.

   When placing the primary storage processor into Service Mode, Unisphere will become momentarily unresponsive (about one minute) as the management services transfer over to the other SP.
5. Return to the cabinet with the system and locate the SP in the DPE from the back of the cabinet.
6. Wait until the SP fault LED is flashing alternating amber and blue before continuing to the next task.

   The SP fault LED flashes alternating amber and blue while the SP remains in Service mode and is receiving active power.

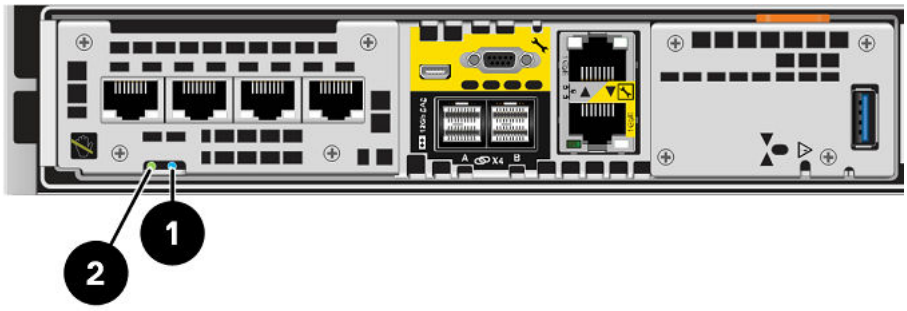

Figure 72. Storage processor assembly LEDs

Table 11. Storage processor assembly LEDs

LED	Location	State	Description
Storage processor assembly fault	1	Amber	Fault has occurred.
		Blue	A management IP address has been assigned.
		Amber or blue blinking	System is booting.

Table 11. Storage processor assembly LEDs (continued)

LED	Location	State	Description
		Blue and amber alternating (blue for 3 seconds)	System not initialized. A management IP address has not been assigned.
		Blue and amber alternating at one second intervals	Storage processor assembly in Service Mode.
		Off	No fault has occurred, normal operation.
Storage processor assembly power	2	Green	Storage processor assembly is on (main power).
		Green blinking	Storage processor assembly is initializing a serial over LAN session.
		Off	Storage processor assembly is off.

Remove the SP assembly

This procedure describes how to remove a SP assembly from the chassis. There are two SP assemblies. The top SP assembly is considered to be upside-down and mirrors the bottom SP assembly. The figure shows the removal of the bottom SP assembly. The procedure for removing the top SP assembly is the same.

About this task

CAUTION: Do not remove a SP assembly while its "Unsafe to remove" LED is lit. If the LED is lit, the SP assembly has not been properly shut down.

CAUTION: Because SP assembly include cooling fans, they should be removed for as short a time as possible. Do not remove SP assemblies from a live system unless replacement parts are available.

Steps

1. Rotate the power cable retention bail to the left (right for top power supply). Disconnect the power cable from the power supply.

   NOTE: If the I/O module and network cables are not already labeled, label them clearly for reconnecting later.

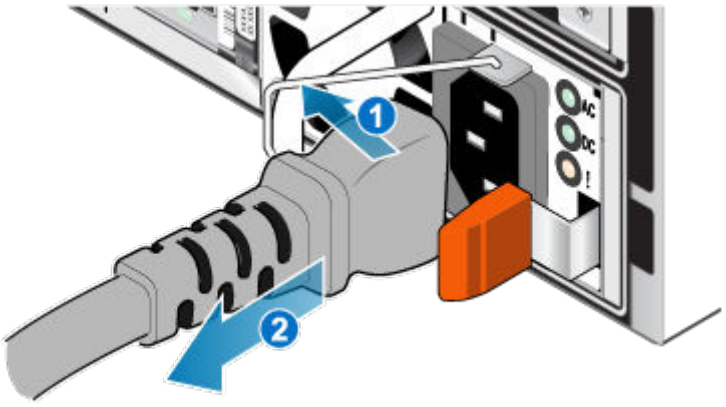

Figure 73. Removing the power cable

2. Disconnect the network and all other cables from the back of the I/O modules and network ports on the SP assembly.

NOTE: Do not remove any cables from the other SP assembly.

3. Pull the orange release trigger while gently pushing in on the SP assembly.
   The hook disengages from the locking mechanism, and the release tab slides out.
   NOTE: The SP assembly comes out of the chassis. Be prepared to support the SP assembly to avoid dropping it.

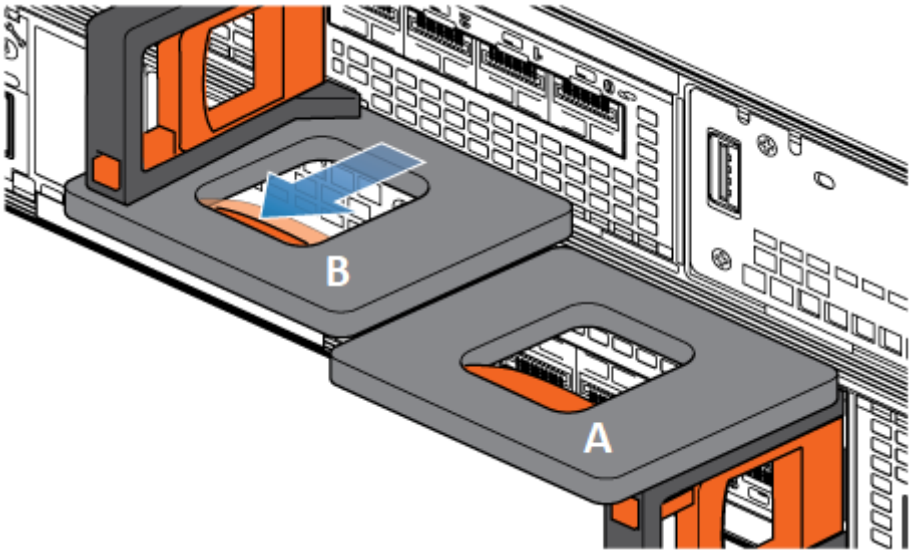

Figure 74. Disengaging the locking mechanism

4. Use the release handle to pull the SP assembly outward enough to grasp the sides with both hands. Then, with both hands supporting the SP assembly, pull the SP assembly fully out of the enclosure.

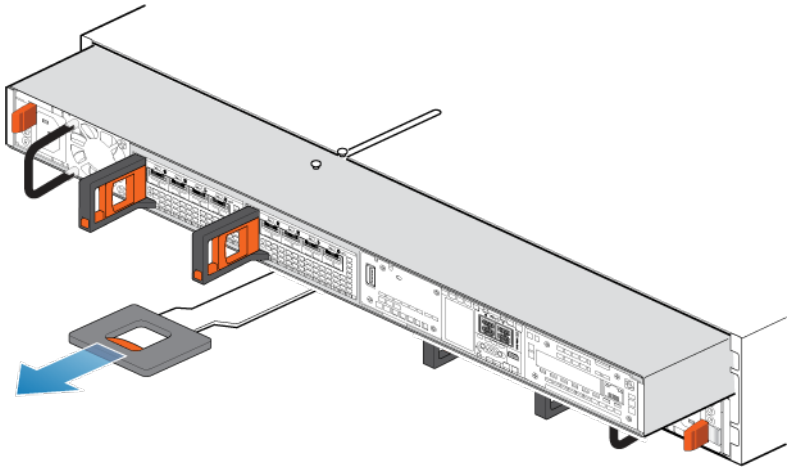

Figure 75. Removing the SP assembly

5. Place the SP assembly on a clean, flat, static-free work surface.

Remove the top cover from the SP assembly

Prerequisites

After removing the SP assembly from the rack, wait at least 30 seconds to ensure that the internal battery has had time to power off.

Steps

1. While pushing down the two blue release buttons, slide the top cover towards the rear of the system, until it stops.

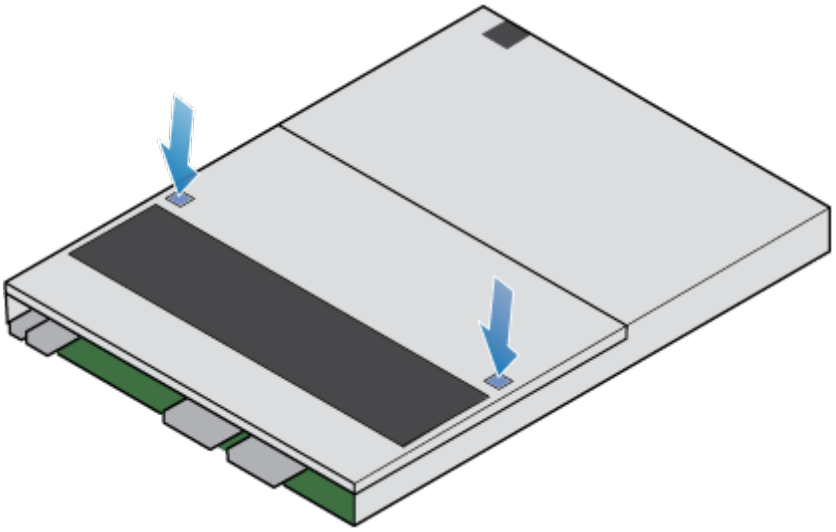

Figure 76. Releasing the top cover

2. Lift the top cover upward and remove it from the SP assembly.

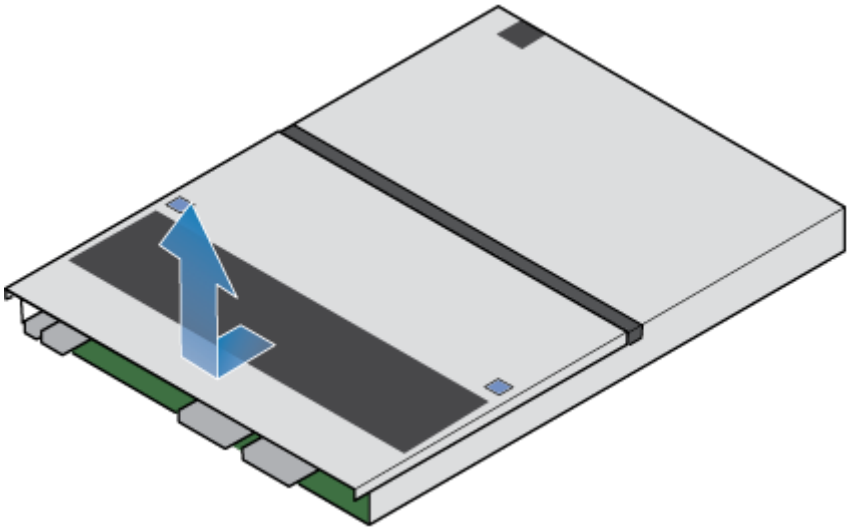

Figure 77. Removing the top cover

Remove the fan module

Steps

1. Disconnect the fan module power cable from the motherboard.

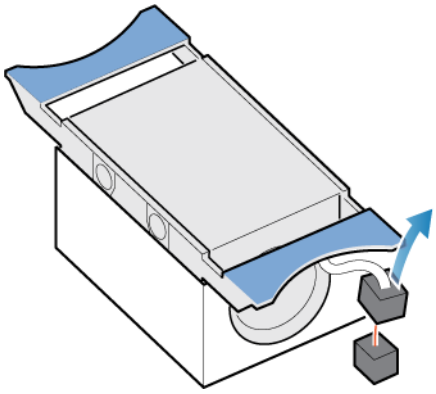

Figure 78. Disconnecting the fan power cable

2. Unhook the fan module power cable from the cable holder.
3. Squeeze the blue release tabs.
4. Lift the fan module away from the motherboard.

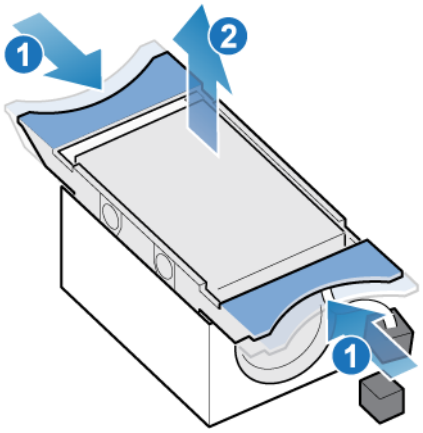

Figure 79. Removing the fan from the motherboard

Install the fan module

Steps

1. Place the fan into the mounting position in the SP assembly.
2. Squeeze the blue tabs and press downward to lock the fan into position.
3. Connect the fan power cable to the connector on the motherboard.

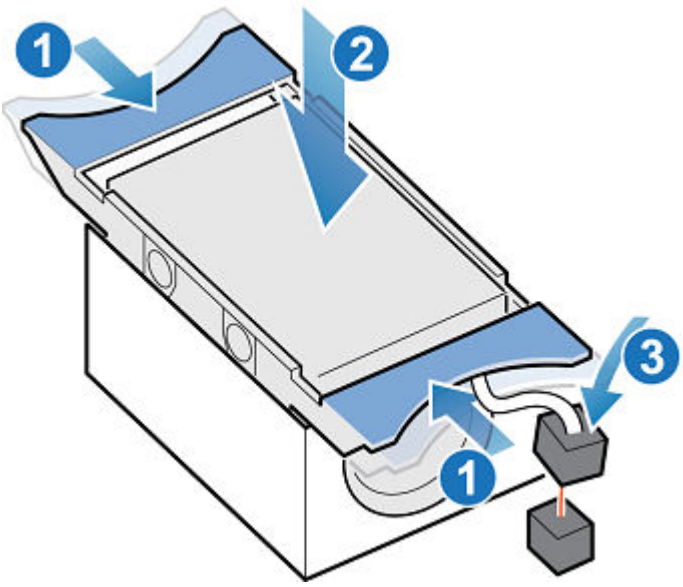

Figure 80. Installing the fan

Install the top cover on the SP assembly

Steps

1. Position the top cover over the SP assembly and align it with the slots on the sides at the rear of the SP assembly.

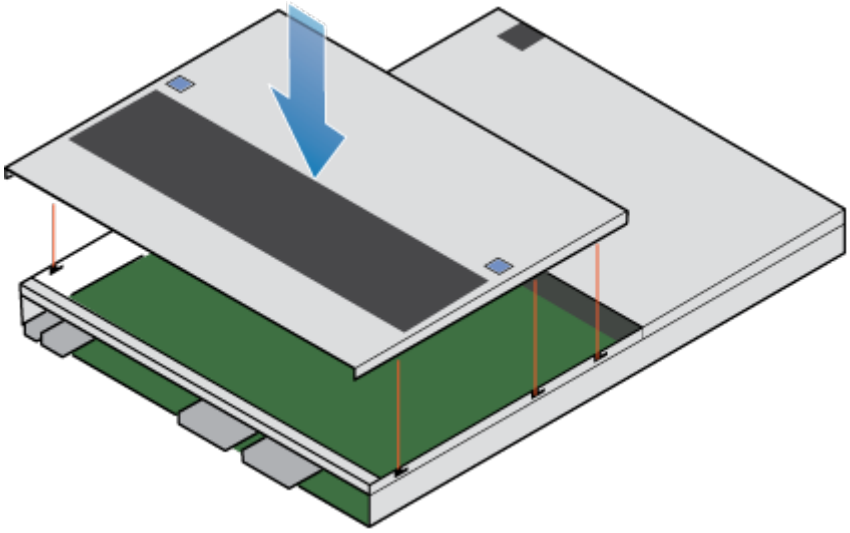

Figure 81. Aligning the top cover

2. Pull the top cover forward to secure it in place.

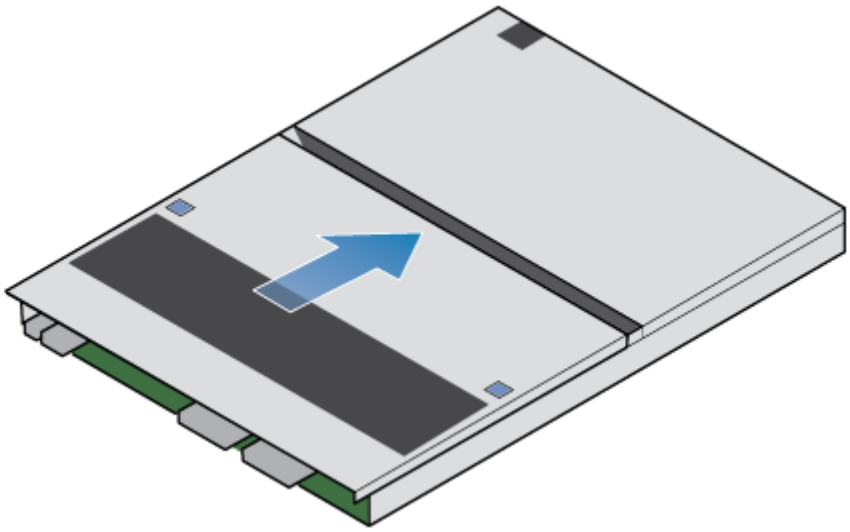

Figure 82. Securing the top cover

Install the SP assembly

Steps

1. Align the pins on the top of the SP assembly with the grooves on the top of the chassis.
2. Slide the SP assembly into the chassis until it stops, about halfway in.

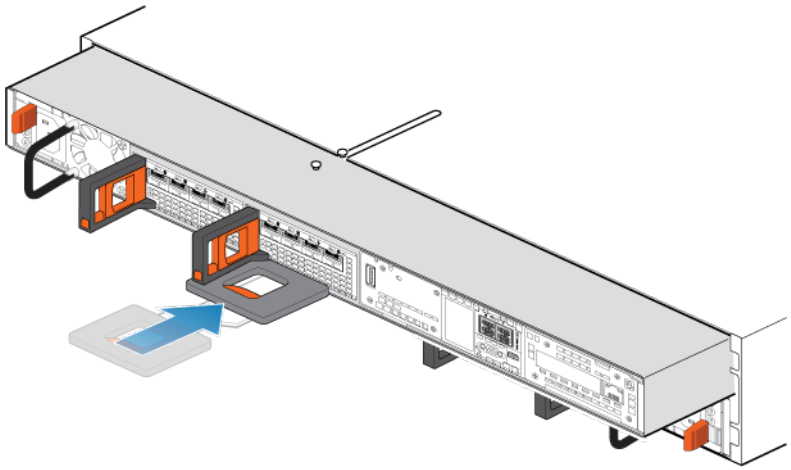

Figure 83. Sliding the SP assembly halfway into the chassis

3. Pull the black release tab out completely, and slide the rest of the SP assembly back into the chassis.
   The black release tab slides back into the system as it is inserted.

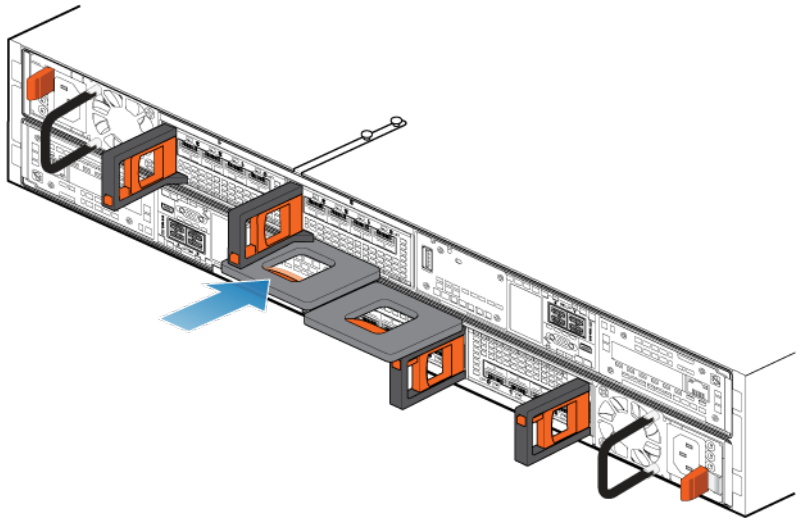

Figure 84. Installing the SP assembly

4. Reconnect the back-end cables and the cables to the I/O modules and network ports.
5. Pull the orange release trigger and push in gently to re-engage the locking mechanism.
   If the black release tab comes out when pulled, the locking mechanism is not engaged.
6. If the node came with a node ID plug, push the node ID plug onto the node handle.
7. Plug in the power cable.

Rebooting an SP assembly into Normal Mode

Prerequisites

If you removed the SP assembly during the replacement, wait about 10-15 minutes after reinserting the SP assembly into the system to allow the SP assembly to fully reboot into Service Mode. Ensure that the SP assembly fault LED is flashing alternating amber and blue (1 hz) before continuing.

NOTE: If you attempt this task before the SP assembly has completed its automatic reboot into Service Mode, the attempt to reboot into Normal mode fails.

About this task

Reboot the recently serviced SP assembly into Normal Mode using the procedure that follows:

Steps

1. Open Unisphere and select **Service**, then **Service Tasks**.
2. Under the name of the SP assembly where you installed the new part, select **Reboot** and the click **Execute**.
3. When prompted, enter the service password to put the SP assembly into Normal Mode.
   It may take up to 15 minutes for the system to complete its reboot, and return to normal mode.

Verifying the operation of the new part in Unisphere

Verify that the new part is recognized by your system, and operating correctly.

Steps

1. In Unisphere, select **System View**.
2. On the **Summary** page, confirm that the system status is OK.
3. Select the **Enclosures** page.

4. Verify that the part appears with the OK status in the enclosure view. You may need to refresh Unisphere by clicking on the refresh icon next to the **Enclosures** view.

   If the system health monitor shows the part as faulted, contact your service provider.

Returning a faulted part

About this task

We appreciate the return of defective material within 5 business days (for US returns). For International customers, please return defective material within 5-10 business days. All instructions and material required to return your defective part were supplied with your good part shipment.

Steps

1. Package the faulted part in the shipping box that contained the replacement part, and seal the box.
2. Ship the failed part to your service provider as described in the instructions that were included with the replacement part.
3. Optional: For more information about returning customer-replaceable parts, from Unisphere, click **Support** > **Replace Disk Drives, Power Supplies, and Other Parts** > **Return a Part** to display the part return instructions.
   If your screen does not show the **Return a Part** option, contact your service provider for instructions on what to do next.

Replace a dual inline memory module (DIMM)

Take the following actions to remove the faulted DIMM and install the replacement DIMM into the system.

The DIMMs are located within the SP assembly. You can access the DIMMs by removing the SP assembly from the chassis and opening the top cover.

Identifying and locating the faulted part in Unisphere

Before you replace a faulted part, locate its placement within the storage system.

Steps

1. In Unisphere, select **System View**.
2. Select the **Enclosures** page.
3. Locate the faulted part marked orange, and displayed in the **Enclosures** view.

Preparing the storage processor (SP) for service

About this task

To protect your system from accidental data loss during this maintenance activity, prepare the SP for service. You prepare the SP for service by putting it in Service Mode.

Entering Service Mode stops I/O on the SP so that service tasks can be safely performed.

NOTE: Both SPs must NOT be in Service Mode at the same time.

Steps

1. Open Unisphere and select **Service**, then **Service Tasks**.
2. Under the name of the storage processor where you install the new part, select **Enter Service Mode**, and then click **Execute**.
3. When prompted, enter the Service Password to put the SP into Service Mode.
4. Optional: Either refresh your browser or follow the on-screen instructions to restore full-functionality to Unisphere.

   When placing the primary storage processor into Service Mode, Unisphere will become momentarily unresponsive (about one minute) as the management services transfer over to the other SP.

5. Return to the cabinet with the system and locate the SP in the DPE from the back of the cabinet.
6. Wait until the SP fault LED is flashing alternating amber and blue before continuing to the next task.
   The SP fault LED flashes alternating amber and blue while the SP remains in Service mode and is receiving active power.

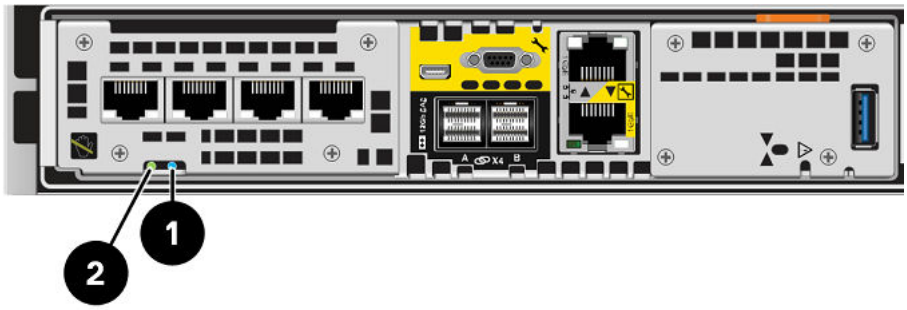

Figure 85. Storage processor assembly LEDs

Table 12. Storage processor assembly LEDs

LED	Location	State	Description
Storage processor assembly fault	1	Amber	Fault has occurred.
		Blue	A management IP address has been assigned.
		Amber or blue blinking	System is booting.
		Blue and amber alternating (blue for 3 seconds)	System not initialized. A management IP address has not been assigned.
		Blue and amber alternating at one second intervals	Storage processor assembly in Service Mode.
		Off	No fault has occurred, normal operation.
Storage processor assembly power	2	Green	Storage processor assembly is on (main power).
		Green blinking	Storage processor assembly is initializing a serial over LAN session.
		Off	Storage processor assembly is off.

Remove the SP assembly

This procedure describes how to remove a SP assembly from the chassis. There are two SP assemblies. The top SP assembly is considered to be upside-down and mirrors the bottom SP assembly. The figure shows the removal of the bottom SP assembly. The procedure for removing the top SP assembly is the same.

About this task

CAUTION: Do not remove a SP assembly while its "Unsafe to remove" LED is lit. If the LED is lit, the SP assembly has not been properly shut down.

CAUTION: Because SP assembly include cooling fans, they should be removed for as short a time as possible. Do not remove SP assemblies from a live system unless replacement parts are available.

Steps

1. Rotate the power cable retention bail to the left (right for top power supply). Disconnect the power cable from the power supply.

   NOTE: If the I/O module and network cables are not already labeled, label them clearly for reconnecting later.

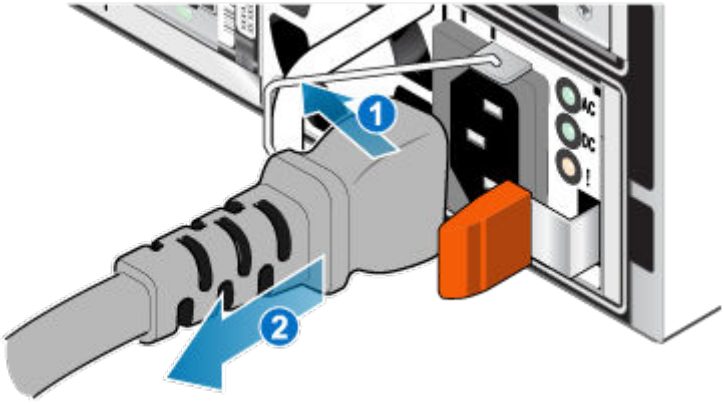

Figure 86. Removing the power cable

2. Disconnect the network and all other cables from the back of the I/O modules and network ports on the SP assembly.

   NOTE: Do not remove any cables from the other SP assembly.

3. Pull the orange release trigger while gently pushing in on the SP assembly.
   The hook disengages from the locking mechanism, and the release tab slides out.

   NOTE: The SP assembly comes out of the chassis. Be prepared to support the SP assembly to avoid dropping it.

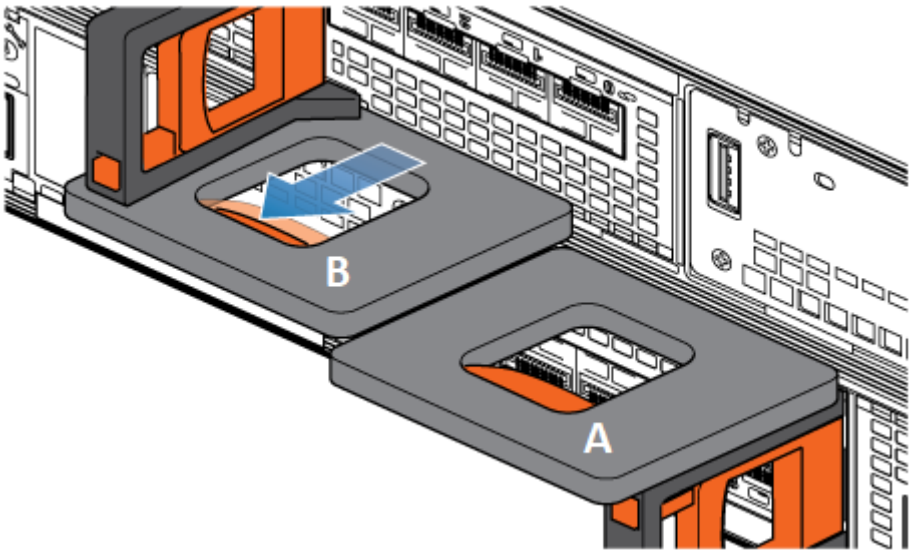

Figure 87. Disengaging the locking mechanism

4. Use the release handle to pull the SP assembly outward enough to grasp the sides with both hands. Then, with both hands supporting the SP assembly, pull the SP assembly fully out of the enclosure.

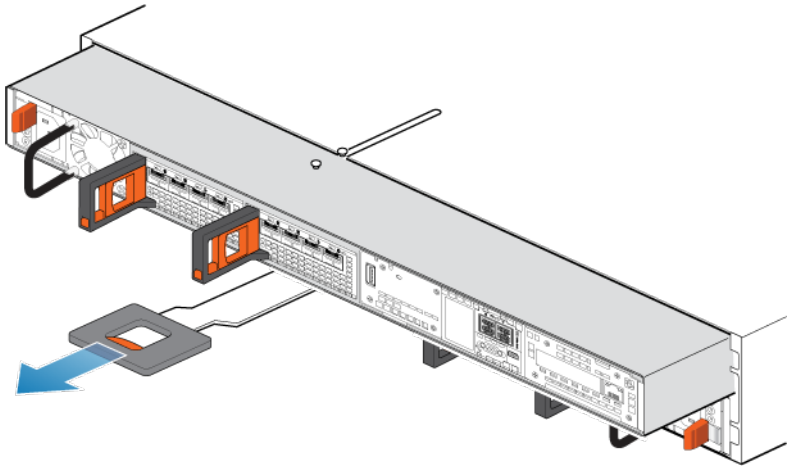

Figure 88. Removing the SP assembly

5. Place the SP assembly on a clean, flat, static-free work surface.

Remove the top cover from the SP assembly

Prerequisites

After removing the SP assembly from the rack, wait at least 30 seconds to ensure that the internal battery has had time to power off.

Steps

1. While pushing down the two blue release buttons, slide the top cover towards the rear of the system, until it stops.

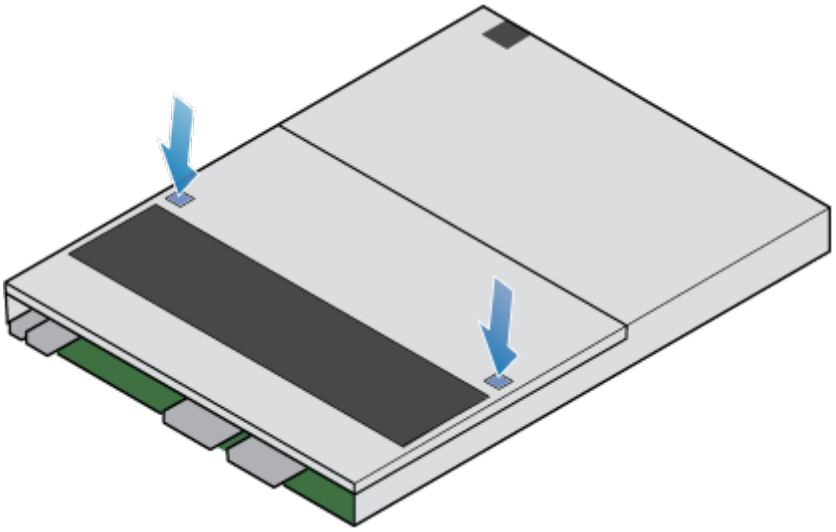

Figure 89. Releasing the top cover

2. Lift the top cover upward and remove it from the SP assembly.

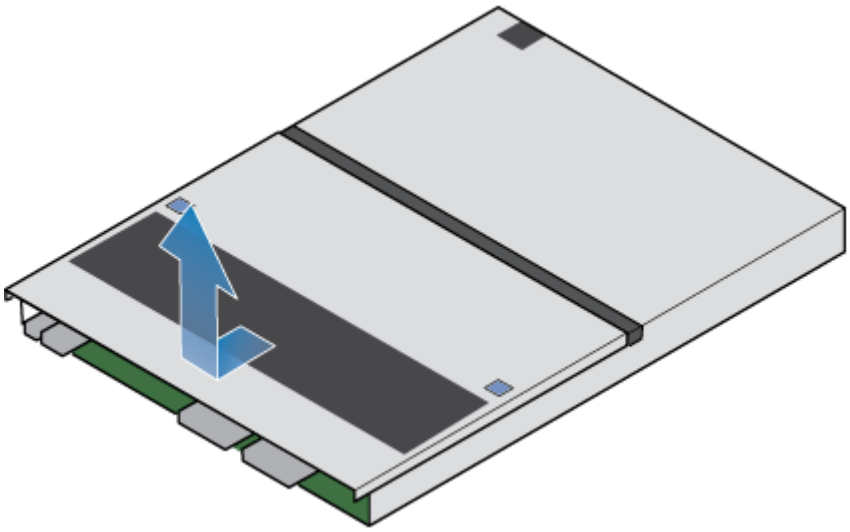

Figure 90. Removing the top cover

Remove the faulted dual inline memory module

Steps

1. Locate the faulted DIMM SP assembly by using the following figure as a reference for orientation. The DIMMs are held in place by white or black retaining tabs.

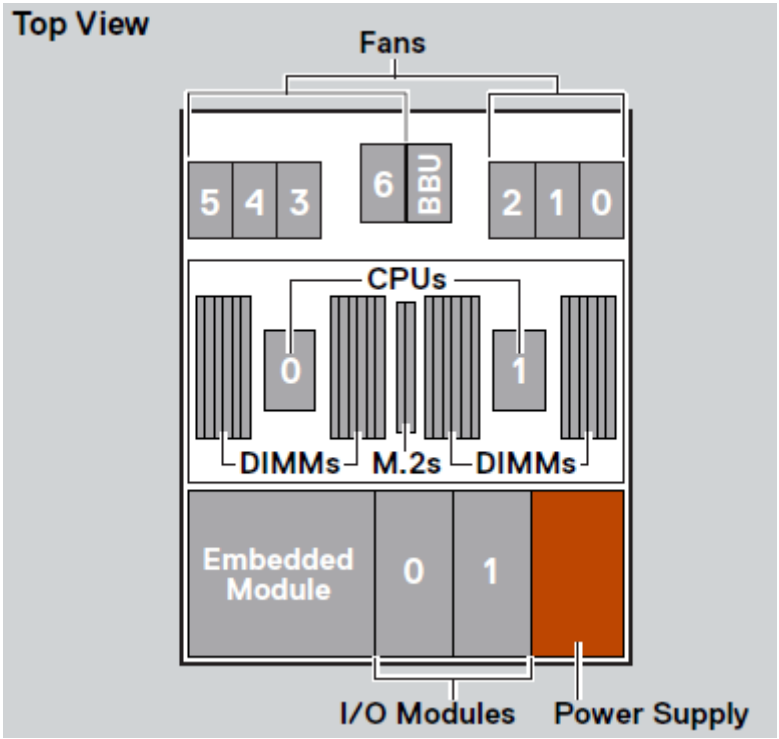

Figure 91. Top view of the SP assembly

NOTE: The leftmost DIMM slot is 23, and the slots decrease sequentially to slot 0 on the far right.

2. Press the white or black retaining tabs downward to free the DIMM from its slot.
3. Remove the faulted DIMM.

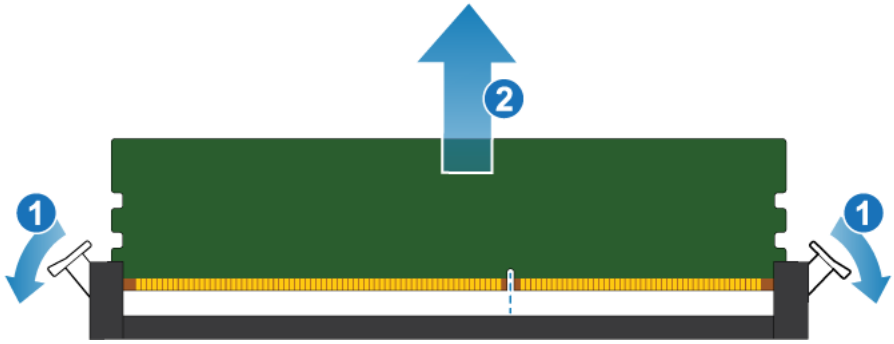

Figure 92. Removing the DIMM

Install the dual inline memory module

Steps

1. Touching only the outside edges of the DIMM, align the DIMM with the connector.
2. Press the DIMM vertically down into the socket using pressure at each end while keeping the leading edge of the DIMM parallel to the connector until it fully seats to the bottom of the socket. When the DIMM engages the contacts in the socket, you will feel resistance, and slightly more force is required to push the module down. During this stage, keep in mind the following precautions:
   - Do not insert the DIMM at an angle.
   - Do not rock the DIMM.
   - Do not insert the DIMM by pushing on one end.
   - Do not seat one end of the DIMM and then the other.

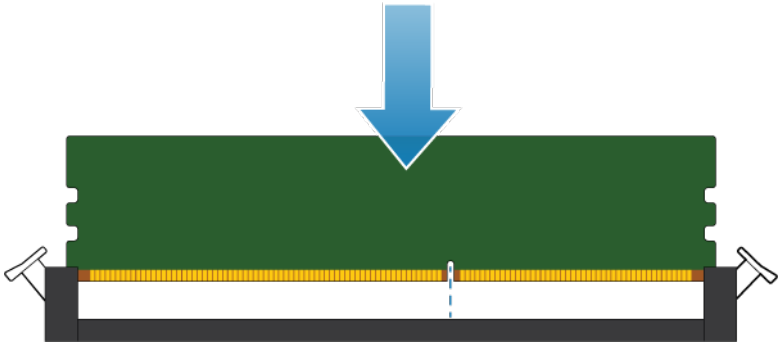

Figure 93. Installing the DIMM

3. Proper DIMM insertion will automatically close the latch ejectors and lock the DIMM into the socket. Verify that the latch ejectors are fully closed and have engaged the notches in the DIMM.

Install the top cover on the SP assembly

Steps

1. Position the top cover over the SP assembly and align it with the slots on the sides at the rear of the SP assembly.

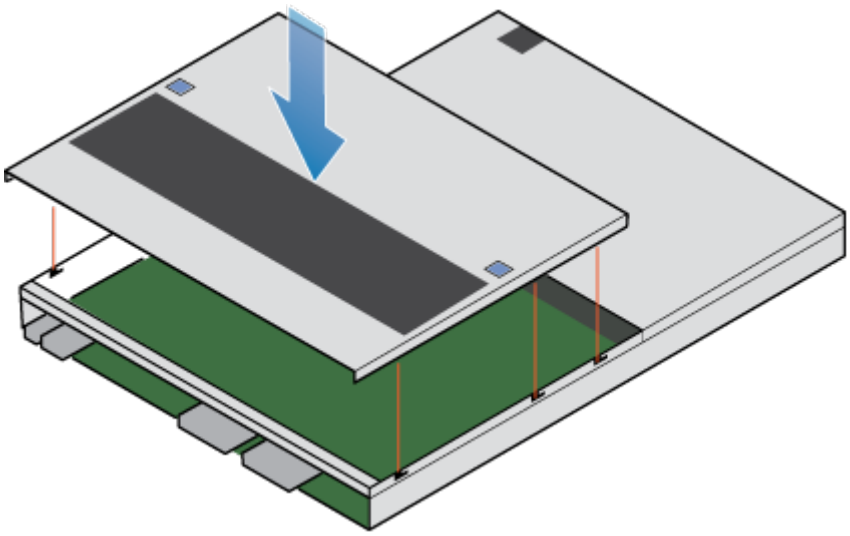

Figure 94. Aligning the top cover

2. Pull the top cover forward to secure it in place.

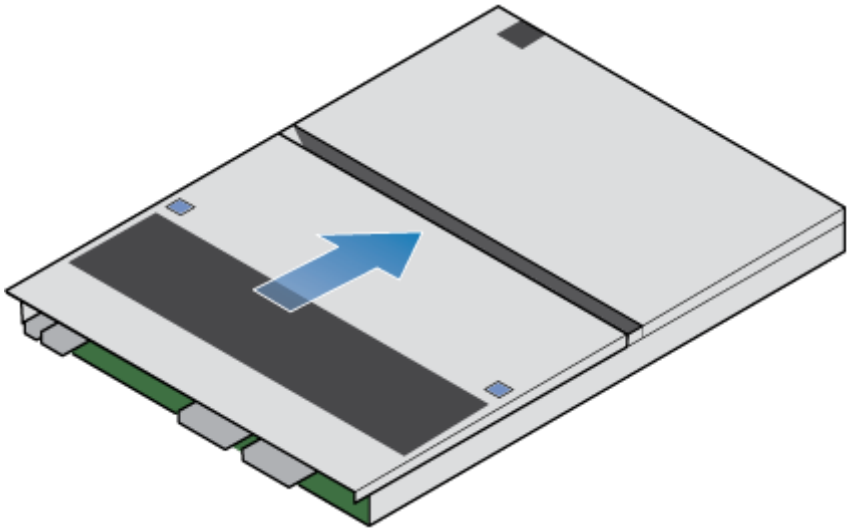

Figure 95. Securing the top cover

Install the SP assembly

Steps

1. Align the pins on the top of the SP assembly with the grooves on the top of the chassis.
2. Slide the SP assembly into the chassis until it stops, about halfway in.

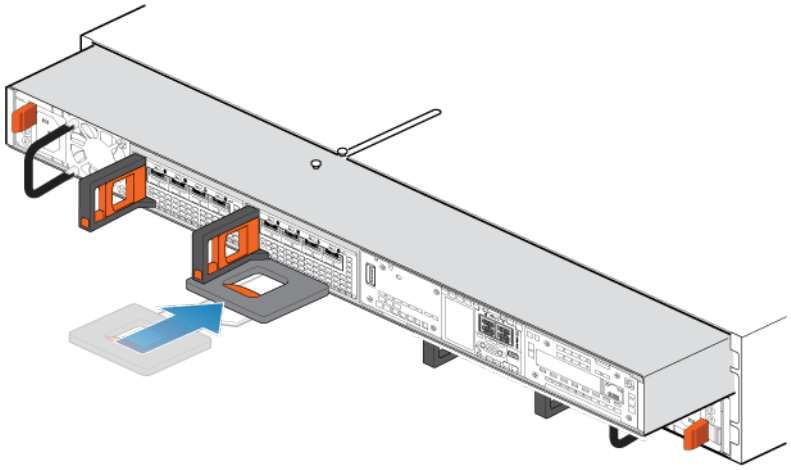

Figure 96. Sliding the SP assembly halfway into the chassis

3. Pull the black release tab out completely, and slide the rest of the SP assembly back into the chassis.
   The black release tab slides back into the system as it is inserted.

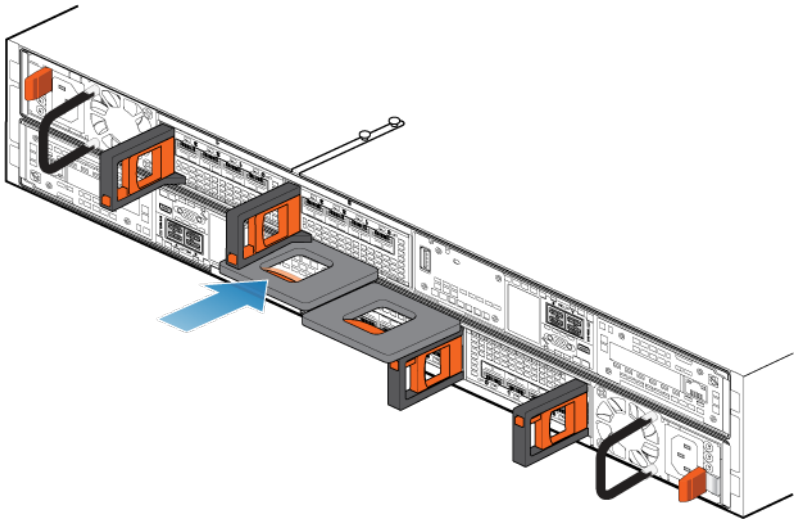

Figure 97. Installing the SP assembly

4. Reconnect the back-end cables and the cables to the I/O modules and network ports.
5. Pull the orange release trigger and push in gently to re-engage the locking mechanism.
   If the black release tab comes out when pulled, the locking mechanism is not engaged.
6. If the node came with a node ID plug, push the node ID plug onto the node handle.
7. Plug in the power cable.

Rebooting an SP assembly into Normal Mode

Prerequisites

If you removed the SP assembly during the replacement, wait about 10-15 minutes after reinserting the SP assembly into the system to allow the SP assembly to fully reboot into Service Mode. Ensure that the SP assembly fault LED is flashing alternating amber and blue (1 hz) before continuing.

NOTE: If you attempt this task before the SP assembly has completed its automatic reboot into Service Mode, the attempt to reboot into Normal mode fails.

About this task

Reboot the recently serviced SP assembly into Normal Mode using the procedure that follows:

Steps

1. Open Unisphere and select **Service**, then **Service Tasks**.
2. Under the name of the SP assembly where you installed the new part, select **Reboot** and the click **Execute**.
3. When prompted, enter the service password to put the SP assembly into Normal Mode.

   It may take up to 15 minutes for the system to complete its reboot, and return to normal mode.

Verifying the operation of the new part in Unisphere

Verify that the new part is recognized by your system, and operating correctly.

Steps

1. In Unisphere, select **System View**.
2. On the **Summary** page, confirm that the system status is OK.
3. Select the **Enclosures** page.
4. Verify that the part appears with the OK status in the enclosure view. You may need to refresh Unisphere by clicking on the refresh icon next to the **Enclosures** view.

   If the system health monitor shows the part as faulted, contact your service provider.

Returning a faulted part

About this task

We appreciate the return of defective material within 5 business days (for US returns). For International customers, please return defective material within 5-10 business days. All instructions and material required to return your defective part were supplied with your good part shipment.

Steps

1. Package the faulted part in the shipping box that contained the replacement part, and seal the box.
2. Ship the failed part to your service provider as described in the instructions that were included with the replacement part.
3. Optional: For more information about returning customer-replaceable parts, from Unisphere, click **Support** > **Replace Disk Drives, Power Supplies, and Other Parts** > **Return a Part** to display the part return instructions.
   If your screen does not show the **Return a Part** option, contact your service provider for instructions on what to do next.

Replace an M.2 SSD

Take the following actions to remove the faulted M.2 SSD and install the replacement M.2 SSD into the system.

The M.2 SSD are located within the SP assembly. You can access the M.2 SSD by removing the SP assembly from the chassis and opening the top cover.

Identifying and locating the faulted part in Unisphere

Before you replace a faulted part, locate its placement within the storage system.

Steps

1. In Unisphere, select **System View**.
2. Select the **Enclosures** page.
3. Locate the faulted part marked orange, and displayed in the **Enclosures** view.

Preparing the storage processor (SP) for service

About this task

To protect your system from accidental data loss during this maintenance activity, prepare the SP for service. You prepare the SP for service by putting it in Service Mode.

Entering Service Mode stops I/O on the SP so that service tasks can be safely performed.

NOTE: Both SPs must NOT be in Service Mode at the same time.

Steps

1. Open Unisphere and select **Service**, then **Service Tasks**.
2. Under the name of the storage processor where you install the new part, select **Enter Service Mode**, and then click **Execute**.
3. When prompted, enter the Service Password to put the SP into Service Mode.
4. Optional: Either refresh your browser or follow the on-screen instructions to restore full-functionality to Unisphere.

   When placing the primary storage processor into Service Mode, Unisphere will become momentarily unresponsive (about one minute) as the management services transfer over to the other SP.
5. Return to the cabinet with the system and locate the SP in the DPE from the back of the cabinet.
6. Wait until the SP fault LED is flashing alternating amber and blue before continuing to the next task.

   The SP fault LED flashes alternating amber and blue while the SP remains in Service mode and is receiving active power.

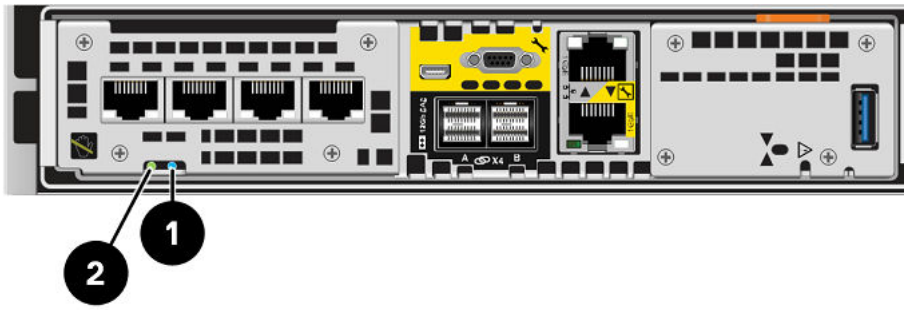

Figure 98. Storage processor assembly LEDs

Table 13. Storage processor assembly LEDs

LED	Location	State	Description
Storage processor assembly fault	1	Amber	Fault has occurred.
		Blue	A management IP address has been assigned.
		Amber or blue blinking	System is booting.
		Blue and amber alternating (blue for 3 seconds)	System not initialized. A management IP address has not been assigned.
		Blue and amber alternating at one second intervals	Storage processor assembly in Service Mode.
		Off	No fault has occurred, normal operation.
Storage processor assembly power	2	Green	Storage processor assembly is on (main power).

Table 13. Storage processor assembly LEDs (continued)

LED	Location	State	Description
		Green blinking	Storage processor assembly is initializing a serial over LAN session.
		Off	Storage processor assembly is off.

Remove the SP assembly

This procedure describes how to remove a SP assembly from the chassis. There are two SP assemblies. The top SP assembly is considered to be upside-down and mirrors the bottom SP assembly. The figure shows the removal of the bottom SP assembly. The procedure for removing the top SP assembly is the same.

About this task

CAUTION: Do not remove a SP assembly while its "Unsafe to remove" LED is lit. If the LED is lit, the SP assembly has not been properly shut down.

CAUTION: Because SP assembly include cooling fans, they should be removed for as short a time as possible. Do not remove SP assemblies from a live system unless replacement parts are available.

Steps

1. Rotate the power cable retention bail to the left (right for top power supply). Disconnect the power cable from the power supply.

   NOTE: If the I/O module and network cables are not already labeled, label them clearly for reconnecting later.

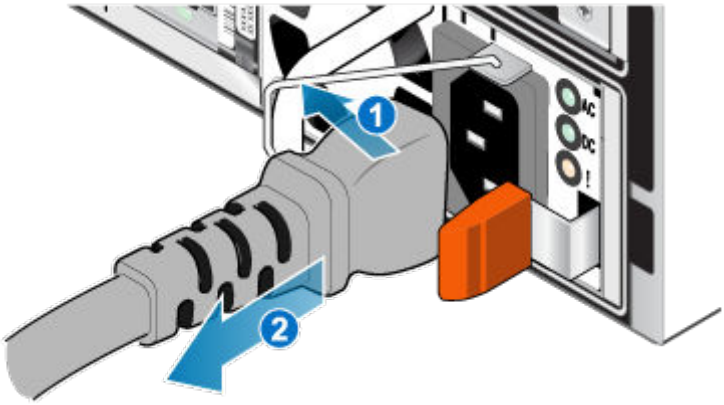

Figure 99. Removing the power cable

2. Disconnect the network and all other cables from the back of the I/O modules and network ports on the SP assembly.

   NOTE: Do not remove any cables from the other SP assembly.

3. Pull the orange release trigger while gently pushing in on the SP assembly.

   The hook disengages from the locking mechanism, and the release tab slides out.

   NOTE: The SP assembly comes out of the chassis. Be prepared to support the SP assembly to avoid dropping it.

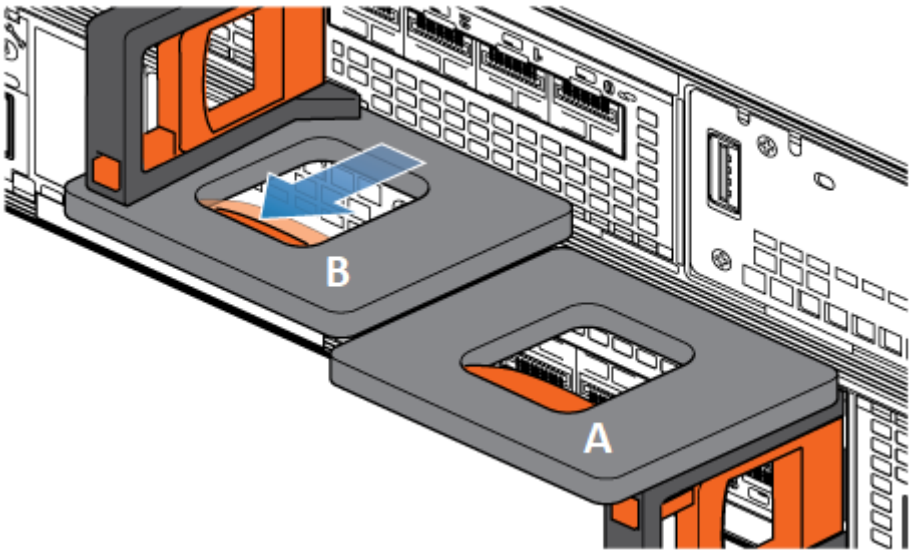

Figure 100. Disengaging the locking mechanism

4. Use the release handle to pull the SP assembly outward enough to grasp the sides with both hands. Then, with both hands supporting the SP assembly, pull the SP assembly fully out of the enclosure.

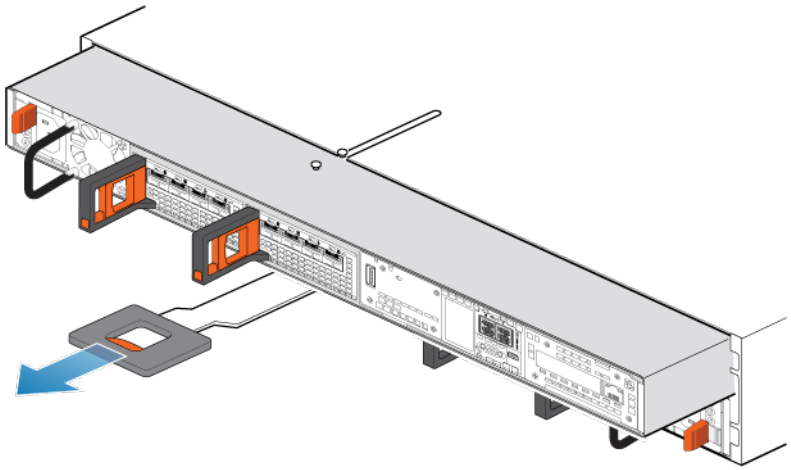

Figure 101. Removing the SP assembly

5. Place the SP assembly on a clean, flat, static-free work surface.

Remove the top cover from the SP assembly

Prerequisites

After removing the SP assembly from the rack, wait at least 30 seconds to ensure that the internal battery has had time to power off.

Steps

1. While pushing down the two blue release buttons, slide the top cover towards the rear of the system, until it stops.

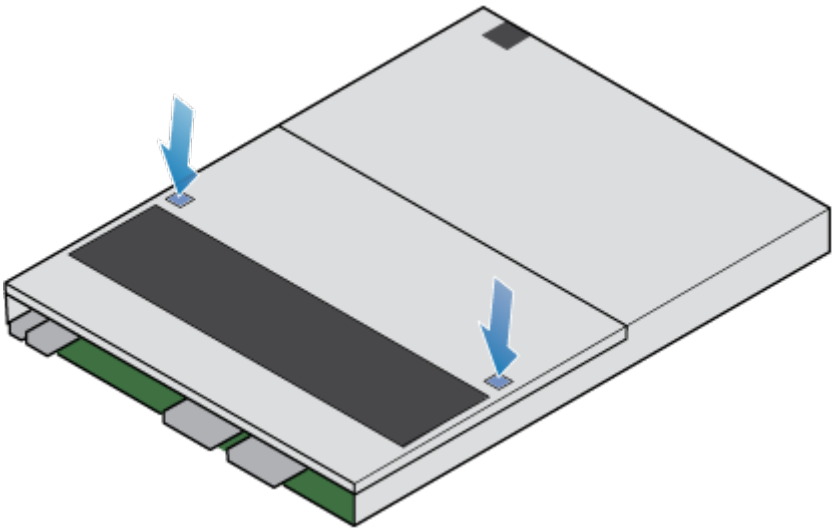

Figure 102. Releasing the top cover

2. Lift the top cover upward and remove it from the SP assembly.

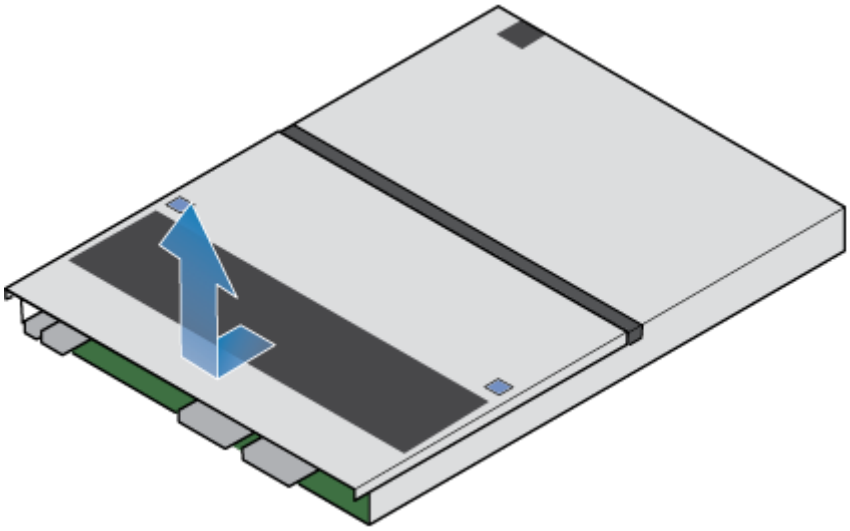

Figure 103. Removing the top cover

Remove the faulted M.2 SSD

Steps

1. Locate the M.2 SSD adapter in the SP assembly.
   You can identify the M.2 SSD adapter by the blue retaining tabs.
2. Press the blue retaining tabs downward to free the M.2 SSD adapter from its slot.
3. Touching only the outside edges of the M.2 SSD adapter, remove the M.2 SSD adapter.

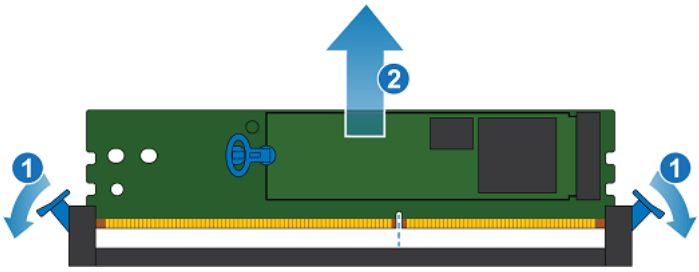

Figure 104. Removing the M.2 SSD adapter

4. Identify the faulted M.2 SSD adapter. One M.2 SSD adapter is labeled DRIVE 0 and the other is labeled DRIVE 1. In Unisphere, DRIVE 0 is identified as InternalM.2BootModule0 and DRIVE 1 is identified as InternalM.2BootModule1.
5. On the faulted M.2 SSD, gently pull the handle on the release tab to separate it from the tab holding it in place.
6. Gently pull straight up on the pull tab to free it from the M.2 SSD riser.
7. Remove the M.2 SSD from the M.2 SSD riser.

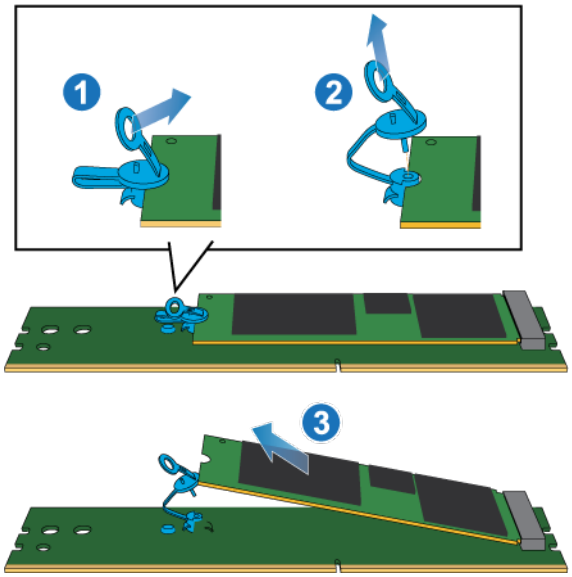

Figure 105. Removing the M.2 SSD from the M.2 SSD riser

Install the M.2 SSD

Steps

1. Place the M.2 SSD into the M.2 SSD adaptor.

   NOTE: The side of the M.2 SSD with the barcodes should be facing up.

2. Align the blue tab on the replacement M.2 SSD with the slot on the M.2 SSD adaptor and gently push it into place.
3. Connect the pull tab to the blue adapter.

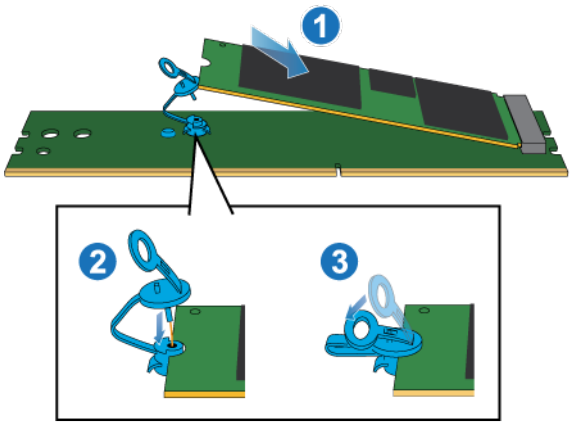

Figure 106. Installing the M.2 SSD into the M.2 SSD adaptor

4. Touching only the outside edges of the M.2 SSD adaptor, align the M.2 SSD adaptor with the connector.
5. Firmly push the M.2 SSD adaptor straight down into the connector.
   When the M.2 SSD adaptor is fully seated, you will hear a snap, and feel the connector latches click into place.

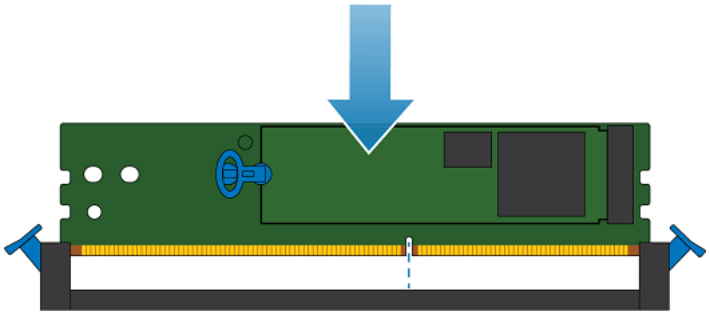

Figure 107. Installing the M.2 SSD adaptor

Install the top cover on the SP assembly

Steps

1. Position the top cover over the SP assembly and align it with the slots on the sides at the rear of the SP assembly.

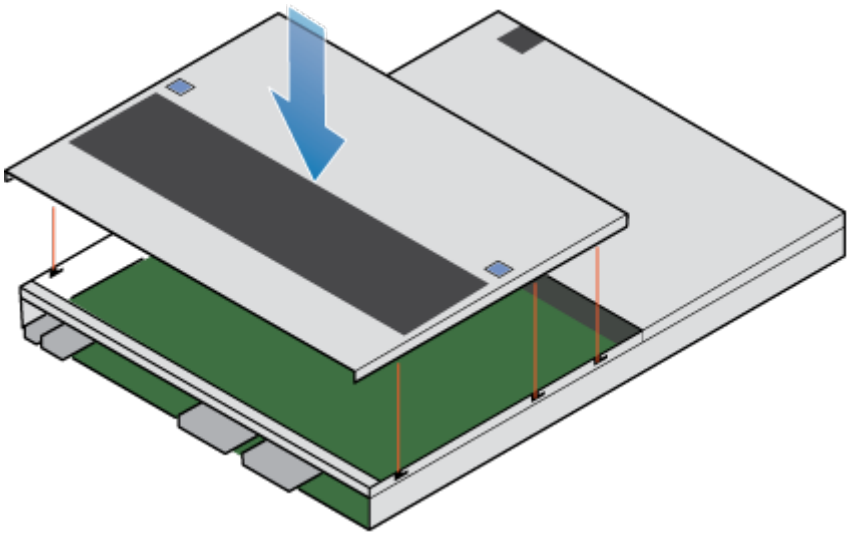

Figure 108. Aligning the top cover

2. Pull the top cover forward to secure it in place.

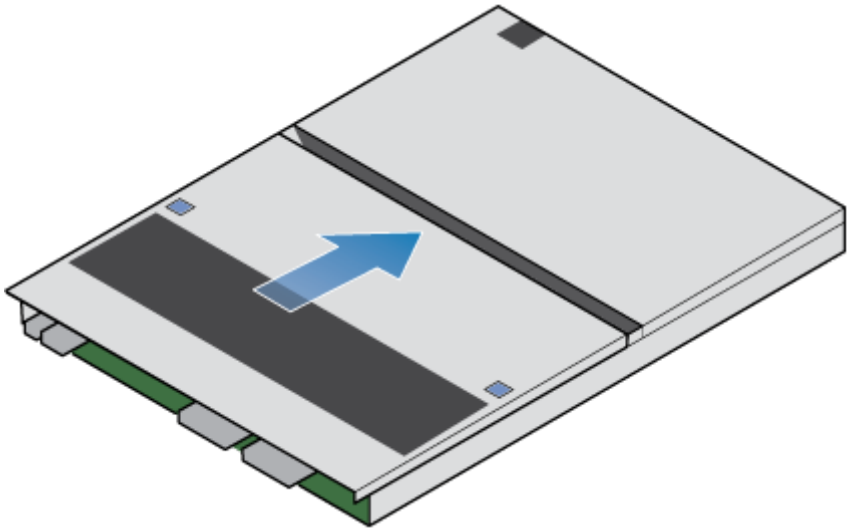

Figure 109. Securing the top cover

Install the SP assembly

Steps

1. Align the pins on the top of the SP assembly with the grooves on the top of the chassis.
2. Slide the SP assembly into the chassis until it stops, about halfway in.

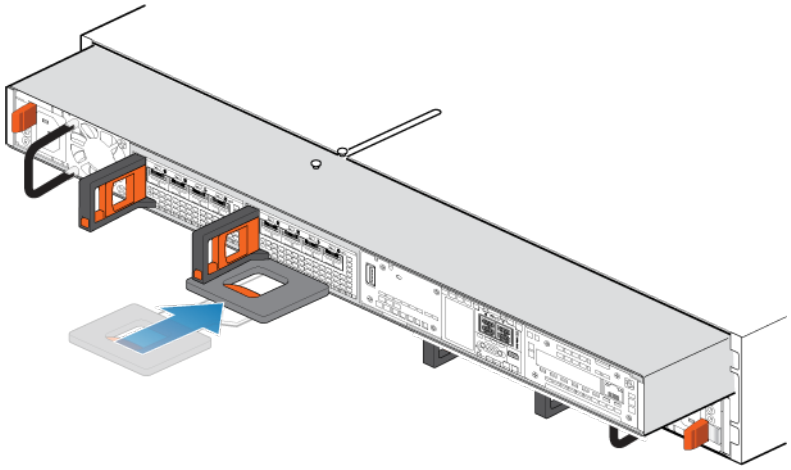

Figure 110. Sliding the SP assembly halfway into the chassis

3. Pull the black release tab out completely, and slide the rest of the SP assembly back into the chassis.
   The black release tab slides back into the system as it is inserted.

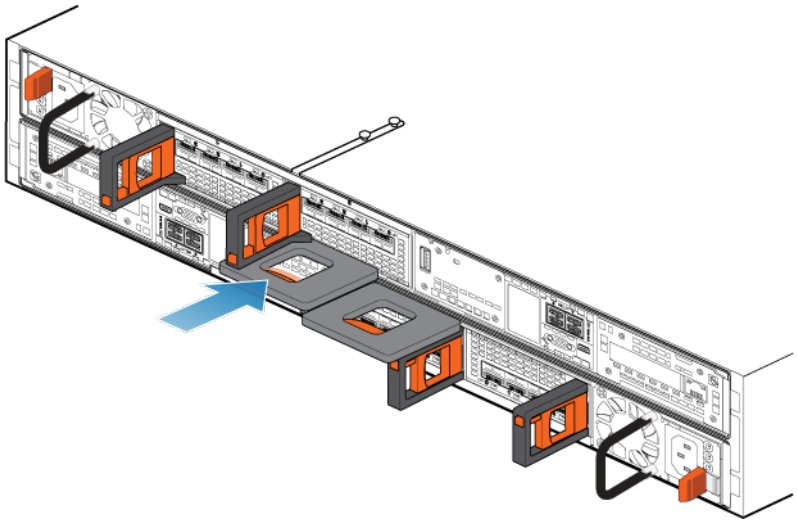

Figure 111. Installing the SP assembly

4. Reconnect the back-end cables and the cables to the I/O modules and network ports.
5. Pull the orange release trigger and push in gently to re-engage the locking mechanism.
   If the black release tab comes out when pulled, the locking mechanism is not engaged.
6. If the node came with a node ID plug, push the node ID plug onto the node handle.
7. Plug in the power cable.

Rebooting an SP assembly into Normal Mode

Prerequisites

If you removed the SP assembly during the replacement, wait about 10-15 minutes after reinserting the SP assembly into the system to allow the SP assembly to fully reboot into Service Mode. Ensure that the SP assembly fault LED is flashing alternating amber and blue (1 hz) before continuing.

NOTE: If you attempt this task before the SP assembly has completed its automatic reboot into Service Mode, the attempt to reboot into Normal mode fails.

About this task

Reboot the recently serviced SP assembly into Normal Mode using the procedure that follows:

Steps

1. Open Unisphere and select **Service**, then **Service Tasks**.
2. Under the name of the SP assembly where you installed the new part, select **Reboot** and the click **Execute**.
3. When prompted, enter the service password to put the SP assembly into Normal Mode.

   It may take up to 15 minutes for the system to complete its reboot, and return to normal mode.

Verifying the operation of the new part in Unisphere

Verify that the new part is recognized by your system, and operating correctly.

Steps

1. In Unisphere, select **System View**.
2. On the **Summary** page, confirm that the system status is OK.
3. Select the **Enclosures** page.
4. Verify that the part appears with the OK status in the enclosure view. You may need to refresh Unisphere by clicking on the refresh icon next to the **Enclosures** view.

   If the system health monitor shows the part as faulted, contact your service provider.

Returning a faulted part

About this task

We appreciate the return of defective material within 5 business days (for US returns). For International customers, please return defective material within 5-10 business days. All instructions and material required to return your defective part were supplied with your good part shipment.

Steps

1. Package the faulted part in the shipping box that contained the replacement part, and seal the box.
2. Ship the failed part to your service provider as described in the instructions that were included with the replacement part.
3. Optional: For more information about returning customer-replaceable parts, from Unisphere, click **Support** > **Replace Disk Drives, Power Supplies, and Other Parts** > **Return a Part** to display the part return instructions.
   If your screen does not show the **Return a Part** option, contact your service provider for instructions on what to do next.

Replace an SP assembly

Take the following actions to remove the faulted SP assembly from the enclosure and install the replacement SP assembly.

Identifying and locating the faulted part in Unisphere

Before you replace a faulted part, locate its placement within the storage system.

Steps

1. In Unisphere, select **System View**.
2. Select the **Enclosures** page.
3. Locate the faulted part marked orange, and displayed in the **Enclosures** view.

Preparing the storage processor (SP) for service

About this task

To protect your system from accidental data loss during this maintenance activity, prepare the SP for service. You prepare the SP for service by putting it in Service Mode.

Entering Service Mode stops I/O on the SP so that service tasks can be safely performed.

NOTE: Both SPs must NOT be in Service Mode at the same time.

Steps

1. Open Unisphere and select **Service**, then **Service Tasks**.
2. Under the name of the storage processor where you install the new part, select **Enter Service Mode**, and then click **Execute**.
3. When prompted, enter the Service Password to put the SP into Service Mode.
4. Optional: Either refresh your browser or follow the on-screen instructions to restore full-functionality to Unisphere.

   When placing the primary storage processor into Service Mode, Unisphere will become momentarily unresponsive (about one minute) as the management services transfer over to the other SP.
5. Return to the cabinet with the system and locate the SP in the DPE from the back of the cabinet.
6. Wait until the SP fault LED is flashing alternating amber and blue before continuing to the next task.

   The SP fault LED flashes alternating amber and blue while the SP remains in Service mode and is receiving active power.

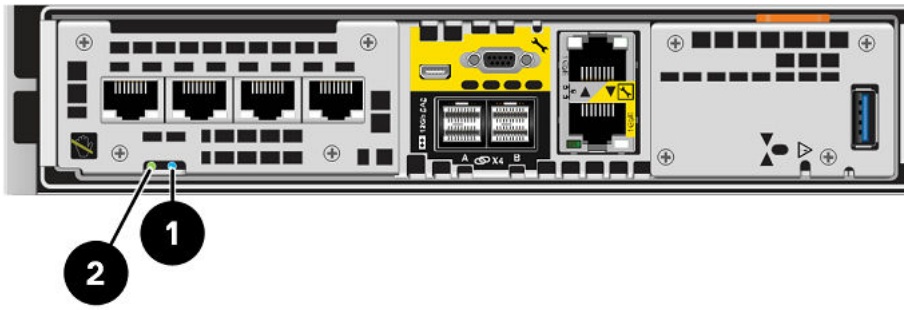

Figure 112. Storage processor assembly LEDs

Table 14. Storage processor assembly LEDs

LED	Location	State	Description
Storage processor assembly fault	1	Amber	Fault has occurred.
		Blue	A management IP address has been assigned.
		Amber or blue blinking	System is booting.
		Blue and amber alternating (blue for 3 seconds)	System not initialized. A management IP address has not been assigned.
		Blue and amber alternating at one second intervals	Storage processor assembly in Service Mode.
		Off	No fault has occurred, normal operation.
Storage processor assembly power	2	Green	Storage processor assembly is on (main power).

Table 14. Storage processor assembly LEDs (continued)

LED	Location	State	Description
		Green blinking	Storage processor assembly is initializing a serial over LAN session.
		Off	Storage processor assembly is off.

Remove the SP assembly

This procedure describes how to remove a SP assembly from the chassis. There are two SP assemblies. The top SP assembly is considered to be upside-down and mirrors the bottom SP assembly. The figure shows the removal of the bottom SP assembly. The procedure for removing the top SP assembly is the same.

About this task

CAUTION: Do not remove a SP assembly while its "Unsafe to remove" LED is lit. If the LED is lit, the SP assembly has not been properly shut down.

CAUTION: Because SP assembly include cooling fans, they should be removed for as short a time as possible. Do not remove SP assemblies from a live system unless replacement parts are available.

Steps

1. Rotate the power cable retention bail to the left (right for top power supply). Disconnect the power cable from the power supply.

   NOTE: If the I/O module and network cables are not already labeled, label them clearly for reconnecting later.

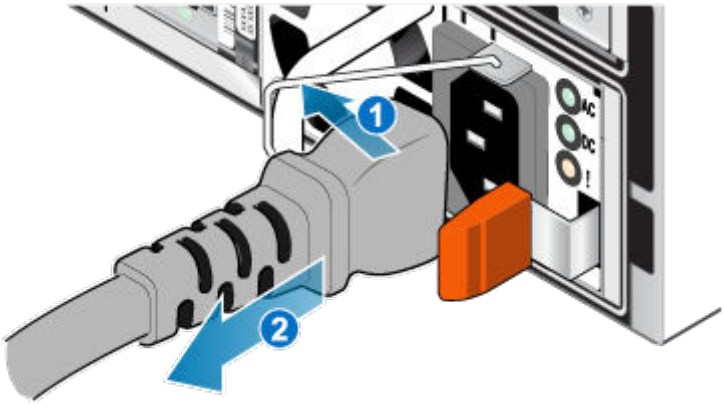

Figure 113. Removing the power cable

2. Disconnect the network and all other cables from the back of the I/O modules and network ports on the SP assembly.

   NOTE: Do not remove any cables from the other SP assembly.

3. Pull the orange release trigger while gently pushing in on the SP assembly.

   The hook disengages from the locking mechanism, and the release tab slides out.

   NOTE: The SP assembly comes out of the chassis. Be prepared to support the SP assembly to avoid dropping it.

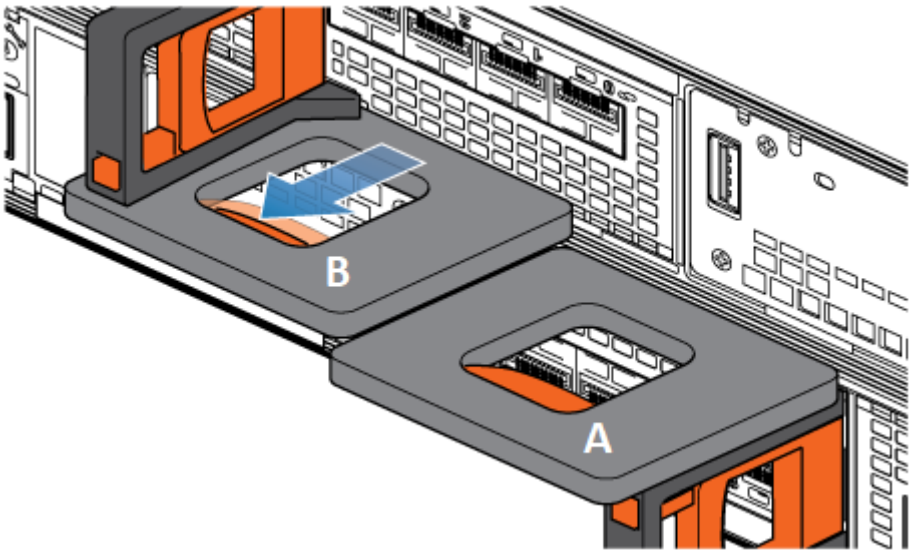

Figure 114. Disengaging the locking mechanism

4. Use the release handle to pull the SP assembly outward enough to grasp the sides with both hands. Then, with both hands supporting the SP assembly, pull the SP assembly fully out of the enclosure.

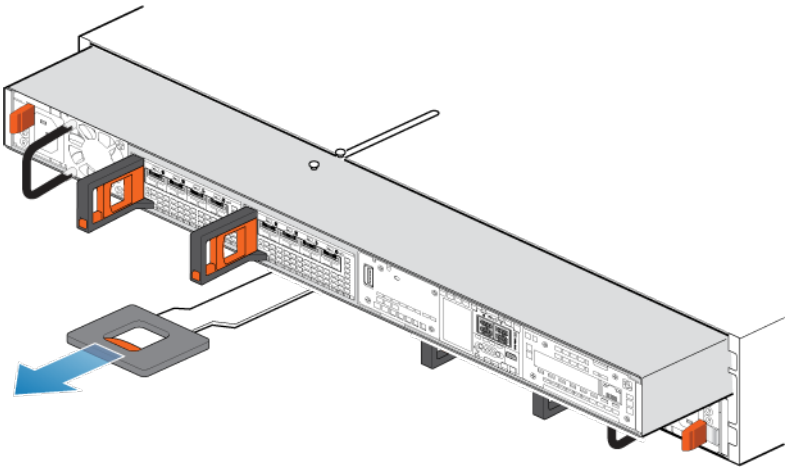

Figure 115. Removing the SP assembly

5. Place the SP assembly on a clean, flat, static-free work surface.

Remove the top cover from the SP assembly

Prerequisites

After removing the SP assembly from the rack, wait at least 30 seconds to ensure that the internal battery has had time to power off.

Steps

1. While pushing down the two blue release buttons, slide the top cover towards the rear of the system, until it stops.

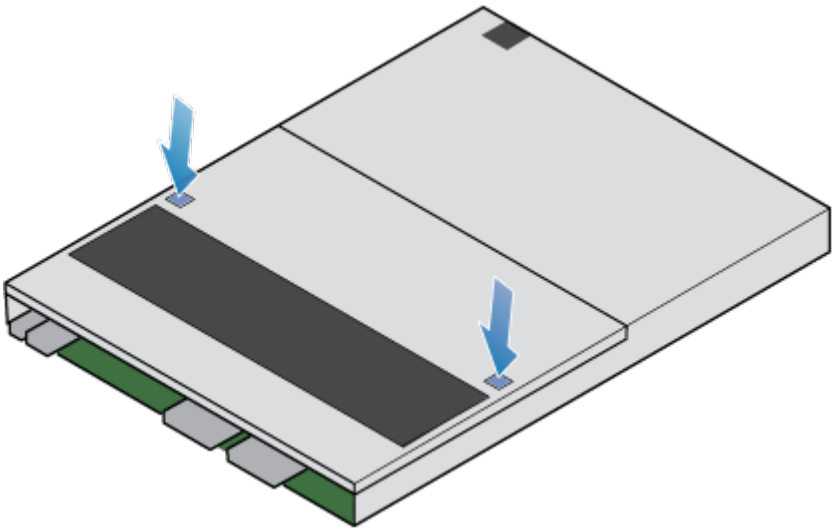

Figure 116. Releasing the top cover

2. Lift the top cover upward and remove it from the SP assembly.

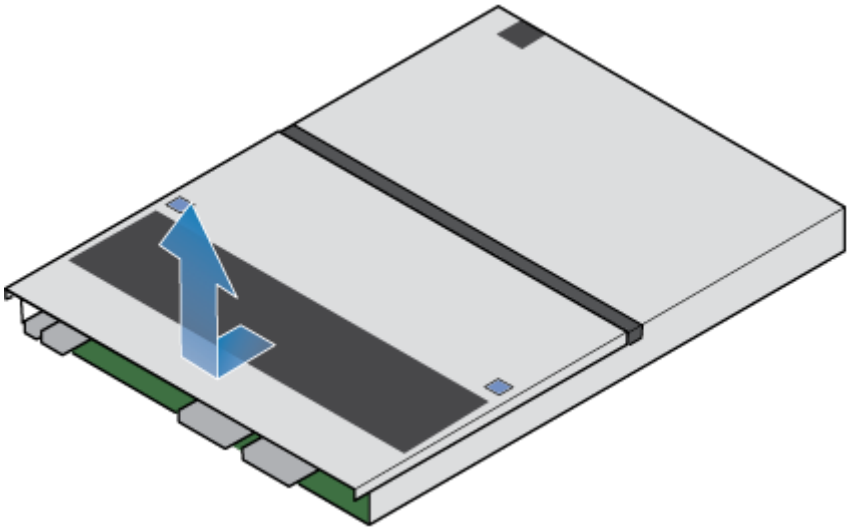

Figure 117. Removing the top cover

Transfer parts from the faulted SP assembly to the replacement SP assembly

Transfer the following components from the faulted SP assembly to the corresponding locations in the replacement SP assembly.

To help ensure the correct placement in the enclosure, transfer only one component at a time.

- Transfer the power supply
- Transfer the I/O module and fillers
- Transfer the embedded module
- Transfer the internal M.2 boot module
- Transfer DIMMs
- Transfer internal fans
- Transfer the internal battery backup module

Remove the internal battery backup module

Steps

1. Remove the internal battery backup module cover.
2. Disconnect the internal battery backup module cable from the motherboard by squeezing the white tab and lifting upward.
3. Push down on the two blue retaining tabs. At the same time, pull up on the blue pull tab.

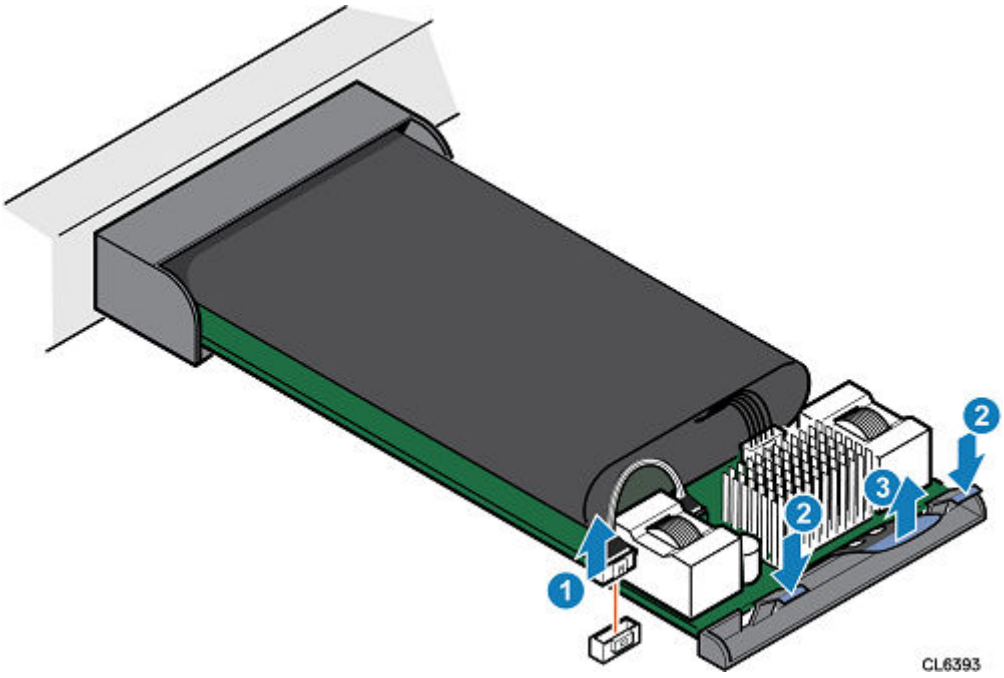

Figure 118. Releasing the internal battery backup module

4. Lift the internal battery backup module away from the motherboard.

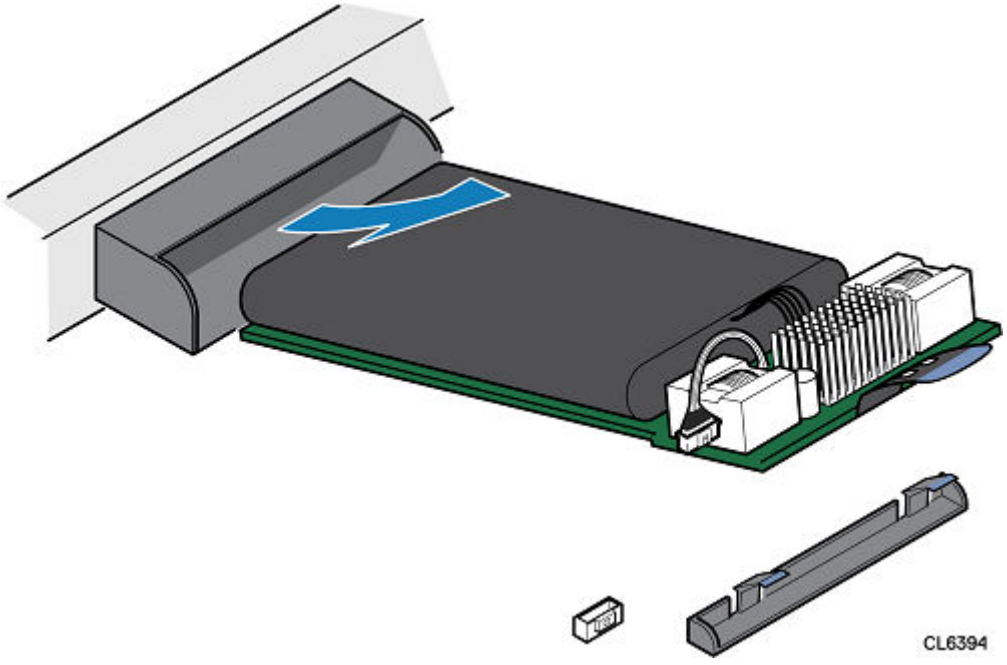

Figure 119. Removing the internal battery backup module

5. Remove the cable from the internal battery backup module by squeezing the white tab and lifting upward.

Install the internal battery backup module

About this task

Steps

1. Connect the internal battery backup module cable to the internal battery backup module.
2. Place the internal battery backup module into position on the motherboard.

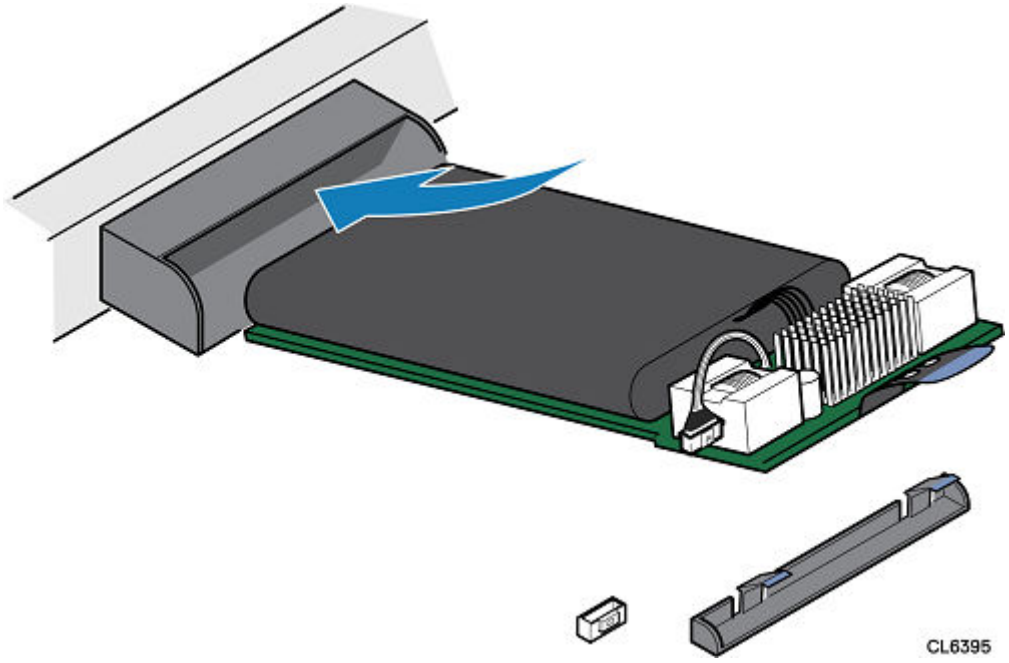

Figure 120. Installing the internal battery backup module

3. Press downward on the internal battery backup module to lock it into position.
4. Connect the internal battery backup module cable to the motherboard.

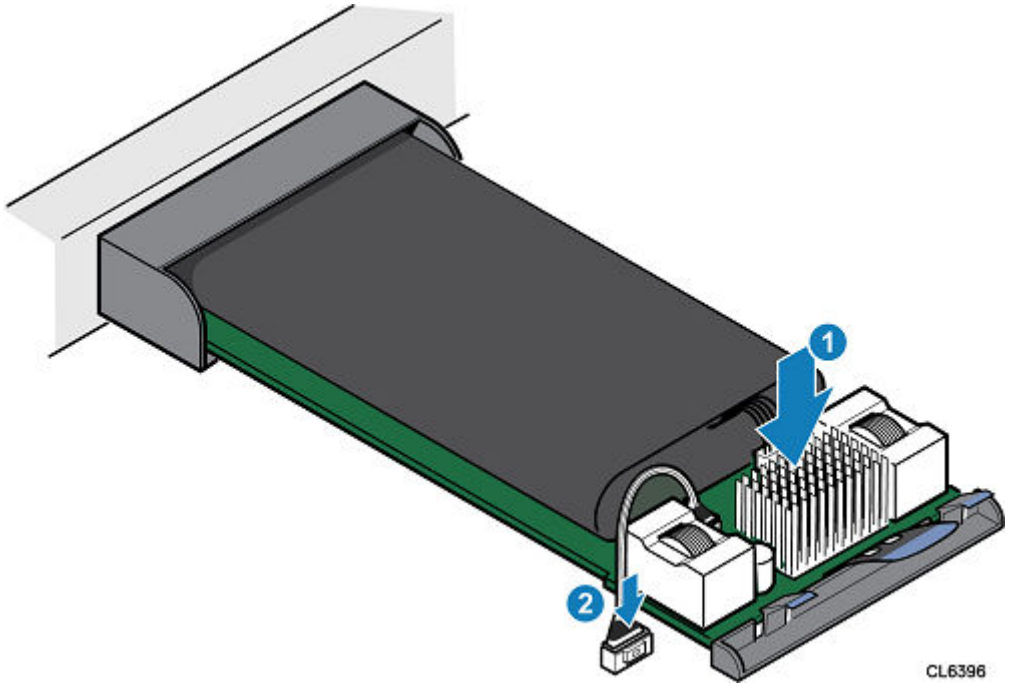

Figure 121. Securing the internal battery backup module

5. Install the internal battery backup module cover.

Install the top cover on the SP assembly

Steps

1. Position the top cover over the SP assembly and align it with the slots on the sides at the rear of the SP assembly.

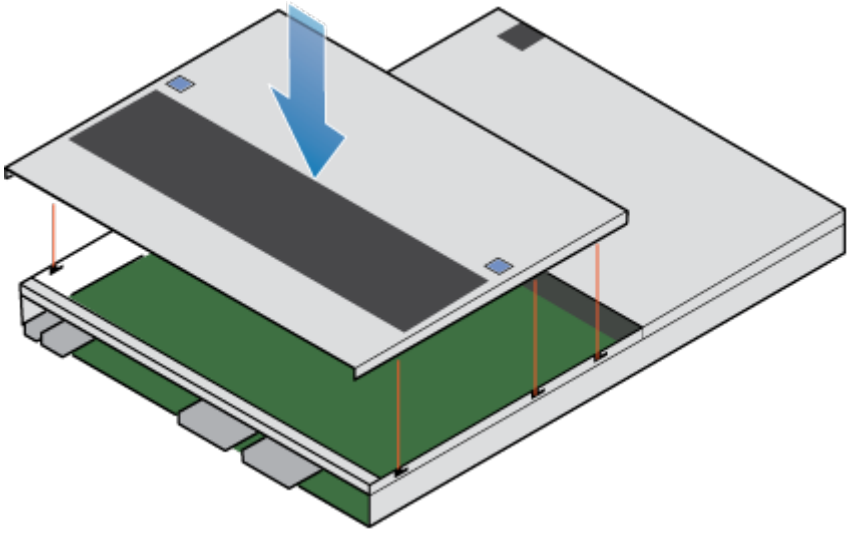

Figure 122. Aligning the top cover

2. Pull the top cover forward to secure it in place.

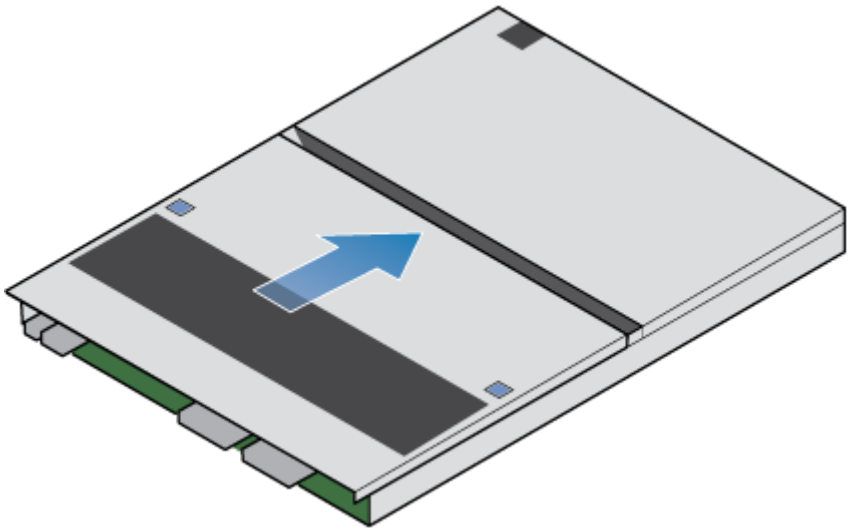

Figure 123. Securing the top cover

Install the SP assembly

Steps

1. Align the pins on the top of the SP assembly with the grooves on the top of the chassis.
2. Slide the SP assembly into the chassis until it stops, about halfway in.

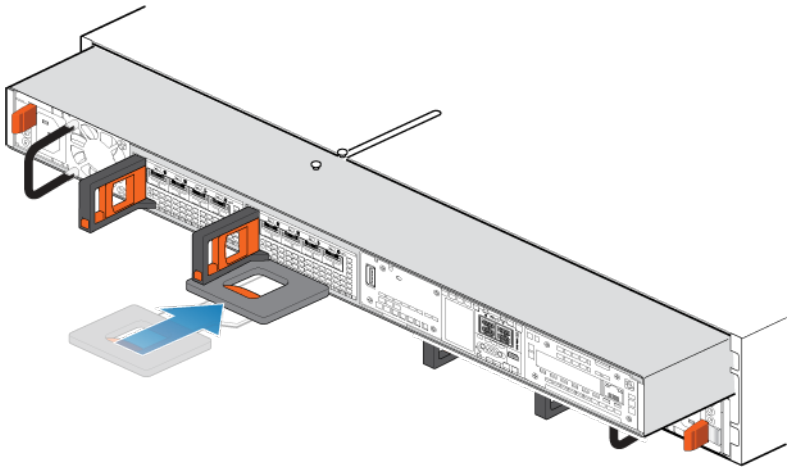

Figure 124. Sliding the SP assembly halfway into the chassis

3. Pull the black release tab out completely, and slide the rest of the SP assembly back into the chassis.
   The black release tab slides back into the system as it is inserted.

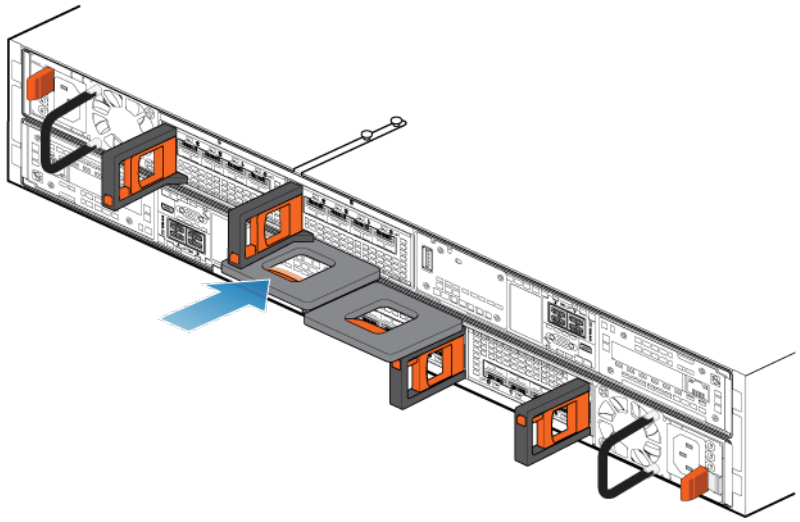

Figure 125. Installing the SP assembly

4. Reconnect the back-end cables and the cables to the I/O modules and network ports.
5. Pull the orange release trigger and push in gently to re-engage the locking mechanism.
   If the black release tab comes out when pulled, the locking mechanism is not engaged.
6. If the node came with a node ID plug, push the node ID plug onto the node handle.
7. Plug in the power cable.

Rebooting an SP assembly into Normal Mode

Prerequisites

If you removed the SP assembly during the replacement, wait about 10-15 minutes after reinserting the SP assembly into the system to allow the SP assembly to fully reboot into Service Mode. Ensure that the SP assembly fault LED is flashing alternating amber and blue (1 hz) before continuing.

NOTE: If you attempt this task before the SP assembly has completed its automatic reboot into Service Mode, the attempt to reboot into Normal mode fails.

About this task

Reboot the recently serviced SP assembly into Normal Mode using the procedure that follows:

Steps

1. Open Unisphere and select **Service**, then **Service Tasks**.
2. Under the name of the SP assembly where you installed the new part, select **Reboot** and the click **Execute**.
3. When prompted, enter the service password to put the SP assembly into Normal Mode.
   It may take up to 15 minutes for the system to complete its reboot, and return to normal mode.

Verifying the operation of the new part in Unisphere

Verify that the new part is recognized by your system, and operating correctly.

Steps

1. In Unisphere, select **System View**.
2. On the **Summary** page, confirm that the system status is OK.
3. Select the **Enclosures** page.

4. Verify that the part appears with the OK status in the enclosure view. You may need to refresh Unisphere by clicking on the refresh icon next to the **Enclosures** view.

   If the system health monitor shows the part as faulted, contact your service provider.

Returning a faulted part

About this task

We appreciate the return of defective material within 5 business days (for US returns). For International customers, please return defective material within 5-10 business days. All instructions and material required to return your defective part were supplied with your good part shipment.

Steps

1. Package the faulted part in the shipping box that contained the replacement part, and seal the box.
2. Ship the failed part to your service provider as described in the instructions that were included with the replacement part.
3. Optional: For more information about returning customer-replaceable parts, from Unisphere, click **Support** > **Replace Disk Drives, Power Supplies, and Other Parts** > **Return a Part** to display the part return instructions.
   If your screen does not show the **Return a Part** option, contact your service provider for instructions on what to do next.

A

Configuration Worksheet

This appendix contains a worksheet to collect and record information and to use as a guide to start setting up your storage system.

Topics:

- Configuration worksheet

Configuration worksheet

Use this worksheet to collect and record information to start setting up your storage system using the following:

- Online Support
- Connection Utility
- Unisphere Initial Configuration Wizard

This worksheet should be used with the information in the previous chapter. See the *Connection Utility* and *Unisphere Online Help* for additional guidance for setting up your storage system. In the respective user interface, click the **?** icon to display its online help.

NOTE: Sites with restricted Internet access must obtain the Connection Utility software and product license keys in advance to configure the system. Go to the Unity Info Hub at Dell Unity Info Hub for detailed instructions.

Online Support

Enter the following information that is related to your Online Support account:

Table 15. Account information

Item	Value
Online Support account: ● Go to support.dell.com to create your Online Support account. ● Your username and password is required for the Unisphere Initial Configuration wizard.	-

Unity license

The following licensing changes are found in Unity OE version 5.5.3:

1. Dell OE versions 5.5.3 and later use a method of licensing that is called Dynamic Licensing. Dynamic licensing allows you to connect to and refresh Unity licenses directly from the user interface (UI) without the need to upload a license file.
2. If you already have a Unity system, Unisphere enables you to click **Register and Connect License** to change from file-based licensing to Dynamic Licensing. If your Unity system is new, you can get your license by clicking the same button.

NOTE: When you transition to Dynamic Licensing, you cannot revert to XML/FLX file-based licensing. FLX-based licensing is no longer supported beginning with version 5.5.3.

See the Dell Dynamic Licensing Portal User Guide for more detailed information.

Connection Utility

Enter the following information that is related to the system management address:

Table 16. System management information

Item	Value
Storage system Product ID / Serial Number: ● Refer to the serial number tag on the front of the DPE component for the system ID. ● Use this ID in the Connection Utility to autodiscover a storage system on a subnet.	-
Name: ● If you obtained the system's IP address through DHCP, use the system serial number for the name.	-
Management IP Address: ● Management IPv4 and/or IPv6 address to assign to the storage system.	-
Subnet Mask (IPv4 only): ● IP address mask that identifies the range of IP addresses in the subnet where the storage system is connected.	-
Gateway: ● Default gateway IP address of the storage system management interface.	-
Prefix Length (IPv6 only): ● The number of significant bits in the address that will be used for routing purposes.	-

Unisphere

Enter the following information to initially log in to Unisphere:

Table 17. Login information

Item	Value
Unisphere login information: ● When logging into Unisphere for the first time, use the default system account username and password	● **User Name:** admin ● **Password:** Password123#

Initial Configuration Wizard

The Initial Configuration Wizard walks you through the initial setup of Unisphere and prepares the system for use. The first time that the wizard launches, you must access the End User License Agreement (EULA) and install Unisphere licenses. Use the following list of screens and related actions as a guide to the initial configuration process.

Table 18. Needed for the Initial Configuration Wizard

Screen Name	Action
Copyright	Accept the EULA.
Unisphere Password	Set the Unisphere admin and service passwords
Unisphere Licenses	Obtain your Unisphere license file online and upload your license file.
DNS servers	(Manual configuration) Enter the network name or IP address of one or more DNS servers. **NOTE:** A DNS server is required for Dell Technology Connectivity Services.
NTP Servers	Enter the network name or IP address of one or more NTP (Network Time Protocol) servers.

Table 18. Needed for the Initial Configuration Wizard (continued)

Screen Name	Action
	NOTE: An NTP server must be configured before you can create a NAS server with SMB (CIFS) shares that use Windows Active Directory (required for multiprotocol). It is also recommended that you configure an NTP server on both systems in order for the replication feature to work correctly.
FAST Cache and Storage Pools	Create FAST Cache (if supported) and storage pools, or configure these items later.
Alert Settings	Configure alert notifications by entering the email addresses to which alerts should be sent, set the severity level for these alerts, and configure an SMTP server.
Proxy Server	(optional) Enter the Protocol, IP address, and Proxy Server username and password.
Dell Support Credentials	Enter your Dell Online Support username and password.
Customer Information	Enter your customer contact information, including name, email, and office phone number. Dell Support uses this information to get in contact with you in response to an issue.
Dell Technology Connectivity Services	Enable and configure Dell Technology Connectivity Services to send system information to Dell and expedite issue resolution.
iSCSI Interfaces	(optional) See the Unisphere Online Help for more information about configuring iSCSI interfaces.
NAS Servers	(optional) See the NAS Server Wizard Online Help for more information about configuring NAS servers.

NOTE: Go to the Dell Unity Info Hub for more information about configuring your storage system.

B

Safety precautions for handling replaceable units

Review these safety considerations before replacing any parts to avoid damage to your system.

Topics:

- Handling replaceable units
- Standard touch point colors

Handling replaceable units

This section describes the precautions that you must take and the general procedures that you must follow when removing, installing, and storing any replaceable unit.

Avoiding electrostatic discharge (ESD) damage

When replacing or installing hardware units, you can inadvertently damage the sensitive electronic circuits in the equipment by simply touching them.

Electrostatic charge that has accumulated on your body discharges through the circuits. If the air in the work area is very dry, run a humidifier in the work area to help decrease the risk of ESD damage.

Follow these procedures to prevent equipment damage:

- Provide enough room to work on the equipment.
- Clear the work site of any unnecessary materials or materials that naturally build up electrostatic charge, such as foam packaging, foam cups, cellophane wrappers, and similar items.
- Do not remove replacement or upgrade units from their antistatic packaging until you are ready to install them.
- Before you begin service, gather together the ESD kit and all other materials you need.
- Once servicing begins, avoid moving away from the work site; otherwise, you may build up an electrostatic charge.
- Use ESD anti-static gloves or an ESD wristband (with strap). If using an ESD wristband with a strap:
  - Attach the clip of the ESD wristband to the ESD bracket or bare metal on a cabinet/rack or enclosure.
  - Wrap the ESD wristband around your wrist with the metal button against your skin.
  - If a tester is available, test the wristband.
- If an emergency arises and the ESD kit is not available, follow the procedures in Emergency Procedures (without an ESD kit).

Emergency procedures (without an electrostatic discharge kit)

In an emergency when an electrostatic discharge (ESD) kit is not available, use the following precautions to reduce the possibility of an electrostatic discharge by ensuring that your body and the subassembly are at the same electrostatic potential.

NOTE: These precautions are not a substitute for the use of an ESD kit. Follow them only in the event of an emergency.

- Before touching any unit, touch a bare (unpainted) metal surface of the cabinet/rack or enclosure.
- Before removing any unit from its antistatic bag, place one hand firmly on a bare metal surface of the cabinet/rack or enclosure, and at the same time, pick up the unit while it is still sealed in the antistatic bag. At the same time, do not move around the room or touch other furnishings, personnel, or surfaces until you have installed the unit.
- When you remove a unit from the antistatic bag, avoid touching any electronic components and circuits on it.
- If you must move around the room or touch other surfaces before installing a unit, first place the unit back in the antistatic bag. When you are ready again to install the unit, repeat these procedures.

Hardware acclimation times

Units must acclimate to the operating environment before applying power. This requires the unpackaged system or component to reside in the operating environment for up to 16 hours in order to thermally stabilize and prevent condensation.

Table 19. Hardware acclimation times

Transit/storage environment		Operating environment temperature	Acclimation time
Temperature	Humidity	-	
Nominal 68-72°F (20-22°C)	Nominal 40-55% RH	Nominal 68-72°F (20-22°C) 40-55% RH	0-1 hour
Cold <68°F (20°C)	Dry <30% RH	<86°F (30°C)	4 hours
Cold <68°F (20°C)	Damp ≥30% RH	<86°F (30°C)	4 hours
Hot >72°F (22°C)	Dry <30% RH	<86°F (30°C)	4 hours
Hot >72°F (22°C)	Humid 30-45% RH	<86°F (30°C)	4 hours
	Humid 45-60% RH	<86°F (30°C)	8 hours
	Humid ≥60% RH	<86°F (30°C)	16 hours
Unknown		<86°F (30°C)	16 hours

- If there are signs of condensation after the recommended acclimation time has passed, allow an additional 8 hours to stabilize.
- Systems and components must not experience changes in temperature and humidity that are likely to cause condensation to form on or in that system or component. Do not exceed the shipping and storage temperature gradient of 45°F/hr (25°C/hr).

Removing, installing, or storing replaceable units

Use the following precautions when removing, handling, or storing replaceable units:

CAUTION: Some replaceable units have the majority of their weight in the rear of the component. Ensure that the back end of the replaceable unit is supported while installing or removing it. Dropping a replaceable unit could result in personal injury or damage to the equipment.

NOTE: For a module that must be installed into a slot in an enclosure, examine the rear connectors on the module for any damage before attempting its installation.

CAUTION: A sudden jar, drop, or even a moderate vibration can permanently damage some sensitive replaceable units.

- Do not remove a faulted replaceable unit until you have the replacement available.
- When handling replaceable units, avoid electrostatic discharge (ESD) by wearing ESD anti-static gloves or an ESD wristband with a strap. For additional information, refer to Avoiding electrostatic discharge (ESD) damage.
- Avoid touching any exposed electronic components and circuits on the replaceable unit.
- Never use excessive force to remove or install a replaceable unit. Take time to read the instructions carefully.
- Store a replaceable unit in the antistatic bag and the specially designed shipping container in which you received it. Use the antistatic bag and special shipping container when you need to return the replaceable unit.

- Replaceable units must acclimate to the operating environment before applying power. This requires the unpackaged component to reside in the operating environment for up to 16 hours in order to thermally stabilize and prevent condensation. Refer to Hardware acclimation times to ensure the replaceable unit has thermally stabilized to the operating environment.
- Front bezels should always be attached to ensure EMI compliance. Make sure you reattach the bezel after replacing a component.
- Each I/O module or drive slot should contain a component or filler panel to ensure proper air flow throughout the system.

Unpacking a part

Use these best practices to unpack a part.

Steps

1. Wear ESD gloves or attach an ESD wristband to your wrist and the enclosure in which you are installing the part.
2. Unpack the part and place it on a static-free surface.
3. If the part is a replacement for a faulted part, save the packing material to return the faulted part.

Standard touch point colors

Touch points are component locations where you can:

- Grip the hardware to remove or install a component.
- Open or close a latch.
- Turn a knob to open, close, or adjust a component.

Standard touch point colors are terra-cotta (orange) or blue.

NOTE: Within this documentation, the color orange is used instead of terra-cotta for simplicity.

Table 20. Standard touch point colors

Touch point color	Description
Terra-cotta (orange) 	This color indicates that you can perform the task, such as remove a component with a terra-cotta (orange) lever, while the system remains powered (up/on). **NOTE:** Some tasks may require additional steps.
Blue 	This color indicates that a shutdown of the system or component is required before you can perform the task, such as removing a component with a blue lever.