Maintenance and Service Guide

HP 200 G2i 16 inch Notebook PC

HP 200 G2Ri 16 inch Notebook PC
HP 200 G2a 16 inch Notebook PC

SUMMARY

This guide provides maintenance information about such topics as spare parts, removal and replacement of parts, security, and backing up.

Legal information

© Copyright 2026 HP Development Company, L.P.

AMD, Athlon, Radeon, and Ryzen are trademarks of Advanced Micro Devices, Inc. ChromeOS is a trademark of Google LLC. Bluetooth is a trademark owned by its proprietor and used by HP Inc. under license. Intel and Core are trademarks of Intel Corporation or its subsidiaries in the U.S. and/or other countries. Microsoft and Windows are either registered trademarks or trademarks of Microsoft Corporation in the United States and/or other countries. USB Type-C, USB-C, and the USB 5 Gbps and USB 10 Gbps port logos are trademarks or registered trademarks of USB Implementers Forum. DisplayPort and the DisplayPort logo are trademarks owned by the Video Electronics Standards Association (VESA) in the United States and other countries. Wi-Fi is a registered trademark of Wi-Fi Alliance.

The information contained herein is subject to change without notice. The only warranties for HP products and services are set forth in the express warranty statements accompanying such products and services. Nothing herein should be construed as constituting an additional warranty. HP shall not be liable for technical or editorial errors or omissions contained herein.

Second Edition: June 2026

First Edition: January 2026

Document Part Number: P92449-002

Product notice

This guide describes features that are common to most products. Some features might not be available on your computer.

Not all features are available in all editions or versions of Windows. Systems might require upgraded and/or separately purchased hardware, drivers, software, or BIOS update to take full advantage of Windows functionality. Windows is automatically updated, which is always enabled. High-speed internet and Microsoft account required. ISP fees might apply and additional requirements might apply over time for updates. See http://www.windows.com. **If your product ships with Windows in S Mode:** Windows in S Mode works exclusively with apps from the Microsoft Store within Windows. Certain default settings, features, and apps cannot be changed. Some accessories and apps that are compatible with Windows might not work (including some antivirus, PDF writers, driver utilities, and accessibility apps), and performance might vary, even if you switch out of S Mode. If you switch to Windows, you cannot switch back to S Mode. Learn more at Windows.com/SmodeFAQ.

To access the latest user guides, go to http://www.hp.com/support, and follow the instructions to find your product. Then select **Setup & User Guides**.

Software Terms

By installing, copying, downloading, or otherwise using any software product preinstalled on this computer, you agree to be bound by the terms of the HP End User License Agreement (EULA). If you do not accept these license terms, your sole remedy is to return the entire unused product (hardware and software) within 14 days for a full refund subject to the refund policy of your seller.

For any further information or to request a full refund of the price of the computer, please contact your seller.

Safety warning notice

Reduce the possibility of heat-related injuries or of overheating the computer by following the practices described.

⚠ **WARNING!** To reduce the possibility of heat-related injuries or of overheating the computer, do not place the computer directly on your lap or obstruct the computer air vents. Use the computer only on a hard, flat surface. Do not allow another hard surface, such as an adjoining optional printer, or a soft surface, such as pillows, rugs or clothing, to block airflow. Also, do not allow the AC adapter to come into contact with the skin or a soft surface, such as pillows, rugs or clothing, during operation. The computer and the AC adapter provided by HP comply with the user-accessible surface temperature limits defined by applicable safety standards.

Important notice about Customer Self-Repair parts

Your computer includes Customer Self-Repair parts and parts that should be accessed only by an authorized service provider.

IMPORTANT: See Removal and replacement procedures for Customer Self-Repair parts on page 34 for details.

Accessing parts described in Removal and replacement procedures for authorized service provider parts on page 45 can damage the computer or void your warranty.

Table of contents

1 Product description 1

2 Getting to know your computer 7

Right side 7

Left side 8

Display 9

Low blue light mode (select products only) 9

Wake-on-voice (select products only) 9

Keyboard area 11

Touchpad settings and components 11

Touchpad settings 11

Adjusting touchpad settings 11

Turning on the touchpad 11

Touchpad components 11

Lights 12

Special keys 14

Bottom 15

Labels 16

3 Illustrated parts catalog 17

Computer major components 17

Display assembly subcomponents 21

Miscellaneous parts 23

4 Removal and replacement procedures preliminary requirements 26

Tools required 26

Service considerations 26

Plastic parts 26

Cables and connectors 26

Drive handling 26

Electrostatic discharge information 27

Generating static electricity 27

Preventing electrostatic damage to equipment 28

Personal grounding methods and equipment 28

Grounding the work area 29

Recommended materials and equipment 29

Cleaning your computer 30

Enabling HP Easy Clean (select products only) 30

Removing dirt and debris from your computer 30

Cleaning your computer with a disinfectant 31

Caring for wood veneer (select products only) 32

Packaging and transporting guidelines 32
Accessing support information 32

5 Removal and replacement procedures for Customer Self-Repair parts 34

Component replacement procedures 34
Preparation for disassembly 34
Bottom cover 34
Battery 38
Removing and reinstalling the same battery 38
Installing a new battery 40

6 Removal and replacement procedures for authorized service provider parts 45

Component replacement procedures 45
Solid-state drive 45
WLAN module 47
Memory modules (select products only) 48
Speakers 50
Fans 51
I/O board 53
Heat sink 54
System board 56
Touchpad 61
Display assembly 63
Top cover with keyboard 71

7 Using Setup Utility (BIOS) 73

Starting Setup Utility (BIOS) 73
Updating Setup Utility (BIOS) 73
Determining the BIOS version 73
Preparing for a BIOS update 74
Downloading a BIOS update 74
Installing a BIOS update 75

8 Using HP PC Hardware Diagnostics 76

Using HP PC Hardware Diagnostics Windows (select products only) 76
Using an HP PC Hardware Diagnostics Windows hardware failure ID code 76
Accessing HP PC Hardware Diagnostics Windows 76
Accessing HP PC Hardware Diagnostics Windows from HP Support Assistant (select products only) 76
Accessing HP PC Hardware Diagnostics Windows from the Start menu (select products only) 77
Downloading HP PC Hardware Diagnostics Windows 77
Downloading the latest HP PC Hardware Diagnostics Windows version from HP 77
Downloading the HP PC Hardware Diagnostics Windows from the Microsoft Store 77
Downloading HP Hardware Diagnostics Windows by product name or number (select products only) 78
Installing HP PC Hardware Diagnostics Windows 78
Using HP PC Hardware Diagnostics UEFI 78
Using an HP PC Hardware Diagnostics UEFI hardware failure ID code 78
Starting HP PC Hardware Diagnostics UEFI 78

Starting HP PC Hardware Diagnostics UEFI through HP Hotkey Support software (select products only) 79
Downloading HP PC Hardware Diagnostics UEFI to a USB flash drive 79
Downloading the latest HP PC Hardware Diagnostics UEFI version 80
Downloading HP PC Hardware Diagnostics UEFI by product name or number (select products only) 80
Using Remote HP PC Hardware Diagnostics UEFI settings (select products only) 80
Downloading Remote HP PC Hardware Diagnostics UEFI 80
Downloading the latest Remote HP PC Hardware Diagnostics UEFI version 80
Downloading Remote HP PC Hardware Diagnostics UEFI by product name or number 81
Customizing Remote HP PC Hardware Diagnostics UEFI settings 81

9 Backing up, restoring, and recovering 82

Backing up information and creating recovery media 82
Using Windows tools for backing up 82
Using the HP Cloud Recovery Download Tool to create a recovery USB flash drive (select products only) 82
Restoring and recovering your system 82
Creating a system restore 83
Restoring and recovery methods 83
Recovering using the HP Recovery USB flash drive 83
Changing the computer boot order 84
Using HP Sure Recover (select products only) 84

10 Specifications 85

Computer specifications 85
Display specifications 86
Solid-state drive specifications 86

11 Statement of memory volatility 88

Current BIOS steps 88
Nonvolatile memory usage 90
Questions and answers 91
Using HP Sure Start (select products only) 92

12 Power cord set requirements 93

Requirements for all countries 93
Requirements for specific countries and regions 93

13 Swelling or deformation of notebook battery 96

Swollen notebook batteries 96
Swollen battery is not a safety issue 96
Discontinue using a swollen battery 96
Replace a swollen battery 96
Minimize battery swelling 96
Adaptive Battery Optimizer (consumer notebooks) 97
HP Battery Health Manager (commercial notebooks) 97

14 Recycling 98
Index 99

1 Product description

This table provides detailed product information.

NOTE: For the latest specifications related to your computer, go to http://www.hp.com/support and follow the instructions to find your product. Select **Specifications & Accessories**, select **Product information**, and then select the specifications link.

Table 1-1 Product components and their descriptions

Category	Description
Product name	**HP 200 G2i 16 inch Notebook PC**
	HP 200 G2Ri 16 inch Notebook PC
	HP 200 G2a 16 inch Notebook PC
Processors	**Intel® processors**
	Intel Core™ 7 240H
	Intel Core 5 220H
	Intel Core 5 210H
	Intel Core 5 220H
	Intel Core 7 150U
	Intel Core 5 120U
	Intel Core 3 100U
	Intel Core 3 N355
	Intel N250
	Intel N150
	Intel Core 7 350
	Intel Core 5 330
	Intel Core 5 320
	Intel Core 5 315
	Intel Core 3 304
	Intel Core Ultra 7 255H
	Intel Core Ultra 5 225H
	Intel Core Ultra 7 255U
	Intel Core Ultra 5 235U
	Intel Core Ultra 5 225U
	AMD® processors
	AMD Ryzen™ 7 H 255

Table 1-1 Product components and their descriptions (continued)

Category	Description
	AMD Ryzen 7 250
	AMD Ryzen 5 220
	AMD Ryzen 3 210
	AMD Ryzen 5 40
	AMD Ryzen 3 30
	AMD Athlon™ Gold 20
	AMD Athlon Silver 10
Graphics	**Intel graphics**
	Intel Graphics
	Support HD decode, DX12, and HDMI
	AMD graphics
	AMD Radeon™ 780M
	AMD Radeon 760M
	AMD Radeon Integrated Graphics
	Supports HD decode, DX12, and HDMI
	Supports FreeSync (Internal and External)
Display	16.0 in (40.64 cm)
	2.5 K (2560 × 1600), low blue light, sRGB 100%, antiglare, ultrawide viewing angle (UWVA), embedded DisplayPort™ (eDP) 1.4, 500 nits, 240 Hz (VRR), with FHD camera or FHD + IR camera
	WUXGA (1920 × 1200), LED, antiglare, sRGB 62.5%, 8 bit, eDP 1.2 without PSR, 300 nits, 60 Hz, touch or nontouch, with FHD camera or FHD + IR camera
	WUXGA (1920 × 1200), OLED, BrightView, DCI-P3, 95%, eDP 1.2 without PSR, 300 nits, 60 Hz, with FHD + IR camera
	• 16:10 aspect ratio
	• Flicker free (select products only)
	• Panel certification (TUV + low blue light hardware solution + HP Eye Ease) (select products only)
	• Screen-to-body ratio: > 88%
Memory	Memory is not accessible or upgradeable

Table 1-1 Product components and their descriptions (continued)

Category	Description
	Supports DDR5-5600 memory in the following configurations (AMD only): • 32 GB • 32 GB (for use in the People's Republic of China [PRC]) • 24 GB • 24 GB (PRC) • 16 GB • 16 GB (PRC) • 8 GB • 8 GB (PRC)
	Supports LPDDR5-5500 onboard memory in the following configurations (AMD only): • 16 GB • 8 GB • 8 GB (PRC)
	Supports DDR5-5200 memory in the following configurations (Intel only): • 32 GB • 32 GB (PRC) • 24 GB • 24 GB (PRC) • 16 GB • 16 GB (PRC) • 8 GB • 8 GB (PRC)
	Supports LPDDR5-4800 onboard memory in the following configurations (Intel only): • 8 GB
Primary storage	**PCIe, Non-Volatile Memory express (NVMe), M.2 2280 solid-state drives (SSDs)**
	1 TB, PCIe-4 × 4
	1 TB, PCIe-4 × 4 (PRC)
	512 GB, PCIe-4 × 4
	512 GB, PCIe-4 × 4 (PRC)
	256 GB, PCIe-4 × 4
	256 GB, PCIe-4 × 4 (PRC)
	Universal Flash Storage (UFS) (Intel N150 and N355 processors)
	128 GB

Table 1-1 Product components and their descriptions (continued)

Category	Description
Audio and video	Dual speakers
	HP True Vision FHD camera: USB 2.0, indicator LED, f2.0, FHD BSI sensor, WDR/TNR/HDR, 80° narrow field-of-view (NFOV)
	HP True Vision FHD + IR camera: USB 2.0, indicator LED, 1 × infrared (IR) LED, f2.0, FHD BSI sensor, WDR/TNR/HDR, 80° NFOV
	Dual-array digital microphone with appropriate software: beam forming, echo cancellation, noise suppression
	1080p by 30 frames per second
Wireless	**Integrated wireless module** (M.2 2230 with dual antennas)
	Realtek Wi-Fi® 7 RTL8922AE-VS + Bluetooth® 6.0 (802.11be 2 × 2)
	Realtek Wi-Fi 6 RTL8852BE-VT + Bluetooth 5.4 (802.11ax 2 × 2) (Intel models)
	MediaTek MT7920 M.2 2230 Wi-Fi 6 + Bluetooth 5.4 WW WLAN (AMD models)
	• Bluetooth LE Audio
	• UNII-4 5 GHz channel
Ports	Audio-out (headphone)/audio-in (microphone) combo jack
	HDMI 2.1 (supports up to 1920 × 1080 @ 60 Hz, HDCP) (AMD models) HDMI 1.4 (supports up to 1920 × 1080 @ 60 Hz, HDCP) (Intel models)
	RJ-45 (network)
	USB 3.2 Gen 1 Type-A (2)
	USB 3.2 Gen 2 Type-C® (2) • Data transfer • Power delivery • HP Sleep & Charge • DisplayPort 1.4 out up to 4K @ 60 Hz • HDMI 1.4 out through adapter
Keyboard/pointing devices	**Keyboard** (with numeric keypad)
	Backlit
	Not backlit
	Clickpad requirements
	Image sensor
	Multitouch gestures enabled
	Precision touchpad
	Modern trackpad gestures
Power requirements	**Battery** (HP Long Life, polymer)
	4 cell, 68 Wh

Table 1-1 Product components and their descriptions (continued)

Category	Description
	3 cell, 41 Wh
	HP Fast Charge Technology
	Smart AC adapters (USB-C®) (select products only)
	100 W, slim, straight
	100 W, Gallium Nitride (GaN), wall mount, halogen free, fixed
	100 W, GaN, wall mount, halogen free, foldable
	65 W, standard, straight
	65 W, GaN, wall mount, halogen free, foldable
	65 W, GaN, wall mount, fixed
	45 W, GaN, standard, straight
	Power cord (select products only)
	C5, conventional, 1 m (3.3 ft), sticker
	C5, 1.0 m, sticker, conventional, red, straight, SA
	Nonstandard, black, straight, duckhead, halogen free
Security	Supports firmware-based Trusted Platform Module (TPM) 2.0
	Microphone mute
	Nano security lock
	Fingerprint reader
	Camera privacy cover
Operating system	Windows® 11 Home 64
	Windows 11 Home 64 Advanced
	Windows 11 Home 64 Advanced Single Language
	Windows 11 Home 64 Chinese Market CPPP
	Windows 11 Home 64 High-end Chinese Market CPPP
	Windows 11 Home 64 Plus
	Windows 11 Home 64 Plus Single Language
	Windows 11 Home 64 Plus Single Language Africa Market PPP
	Windows 11 Home 64 Plus Single Language India Market PPP
	Windows 11 Home 64 Plus Single Language Indonesia Market PPP
	Windows 11 Home 64 Single Language
	Windows 11 Home 64 Single Language Africa Market PPP
	Windows 11 Home 64 Single Language APAC EM PPP
	Windows 11 Home 64 Single Language India Market PPP
	Windows 11 Home 64 Single Language Indonesia Market PPP

Table 1-1 Product components and their descriptions (continued)

Category	Description
	Windows 11 Home 64 StF MSNA for Higher Education
	Windows 11 Home 64 StF MSNA for Higher Education Strategic
	Windows 11 Pro 64
	Windows 11 Pro 64 Chinese Market
	Windows 11 Pro 64 StF MSNA Standard
	Ubuntu Linux 24.04 LTS
	Rakuten AI
Serviceability	**End user replaceable parts**
	AC adapter
	Bottom cover
	Battery

2 Getting to know your computer

Your computer features top-rated components. This chapter provides details about your components, where they are located, and how they work.

Right side

Use the illustration and table below that that most closely matches your to computer to identify the components on the right side of the computer.

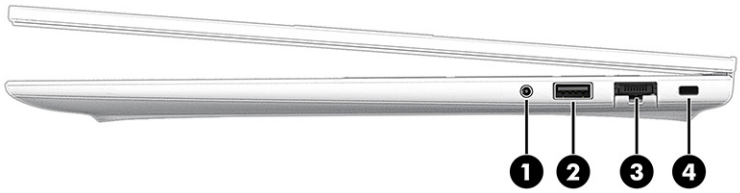

Table 2-1 Right-side components and their descriptions

	Component	Description
(1)	Audio-out (headphone)/Audio-in (microphone) combo jack	Connects optional powered stereo speakers, headphones, earbuds, a headset, or a television audio cable. Also connects an optional headset microphone. This jack does not support optional standalone microphones. **WARNING!** To reduce the risk of personal injury, adjust the volume before putting on headphones, earbuds, or a headset. For additional safety information, see the *Regulatory, Safety, and Environmental Notices*. To access this guide: ▪ Select the **Search** icon in the taskbar, type `HP Documentation` in the search box, and then select **HP Documentation**. **NOTE:** When a device is connected to the jack, the computer speakers are disabled.
(2)	USB 5 Gbps port	Connects a USB device, provides high-speed data transfer, and (for select products) charges small devices (such as a smartphone) when the computer is on. **NOTE:** Use a standard USB Type-A charging cable or cable adapter (purchased separately) when charging a small external device.
(3)	RJ-45 (network) jack/status lights (select products only)	Connects a network cable. • White: The network is connected. • Amber: Activity is occurring on the network.

Table 2-1 Right-side components and their descriptions (continued)

	Component	Description
(4)	Security cable slot (select products only)	Attaches an optional security cable to the computer. **NOTE:** The security cable is designed to act as a deterrent, but it might not prevent the computer from being mishandled or stolen.

Left side

Use this illustration and table to identify the components on the left side of the computer.

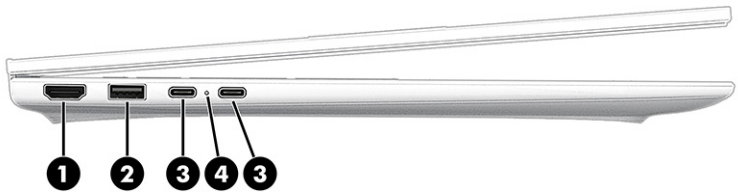

Table 2-2 Left-side components and their descriptions

		Component	Description
(1)	HDMI	HDMI port	Connects an optional video or audio device, such as a high-definition television, any compatible digital or audio component, or a high-speed High-Definition Multimedia Interface (HDMI) device.
(2)	5Gbps	USB 5 Gbps port	Connects a USB device, provides high-speed data transfer, and (for select products) charges small devices (such as a smartphone) when the computer is on. **NOTE:** Use a standard USB Type-A charging cable or cable adapter (purchased separately) when charging a small external device.
(3)	10Gbps	USB Type-C® 10 Gbps power connectors and ports (2)	Connect a USB device, provide high-speed data transfer, and charge small devices (such as a smartphone), even when the computer is off. **NOTE:** Use a standard USB Type-C charging cable or cable adapter (purchased separately) when charging a small external device. - and - Connect a display device that has a USB Type-C connector, providing DisplayPort output.

Table 2-2 Left-side components and their descriptions (continued)

	Component	Description
(4)	AC adapter and battery light	• White: The AC adapter is connected and the battery is fully charged. • Blinking amber: The AC adapter is disconnected and the battery has reached a low battery level. • Amber: The AC adapter is connected and the battery is charging. • Off: The battery is not charging.

Display

The computer display can include essential components such as speakers, antennas, cameras, and microphones.

Low blue light mode (select products only)

Your computer display is shipped from the factory in low blue light mode for improved eye comfort and safety. Also, blue light mode automatically adjusts blue light emissions when you are using the computer at night or for reading.

⚠ **WARNING!** To reduce the risk of serious injury, read the *Safety & Comfort Guide*. It describes proper workstation setup and proper posture, health, and work habits for computer users. The *Safety & Comfort Guide* also provides important electrical and mechanical safety information. The *Safety & Comfort Guide* is available on the web at http://www.hp.com/ergo.

Wake-on-voice (select products only)

Use the wake-on-voice feature to bring the computer out of the sleep state quickly.

To access the wake-on-voice settings, follow these steps:

1. Select the **Search** icon in the taskbar, type `Xiaowei` in the search box, and then select **Xiaowei**.
2. When the tool opens, scan the QR code with your mobile device, which takes you to the settings page, where you can select your wake-on-voice features.
3. Follow the on-screen instructions.

NOTE: Allow the Xiaowei app to continue running on the computer.

Use this illustration and table to identify components on the display.

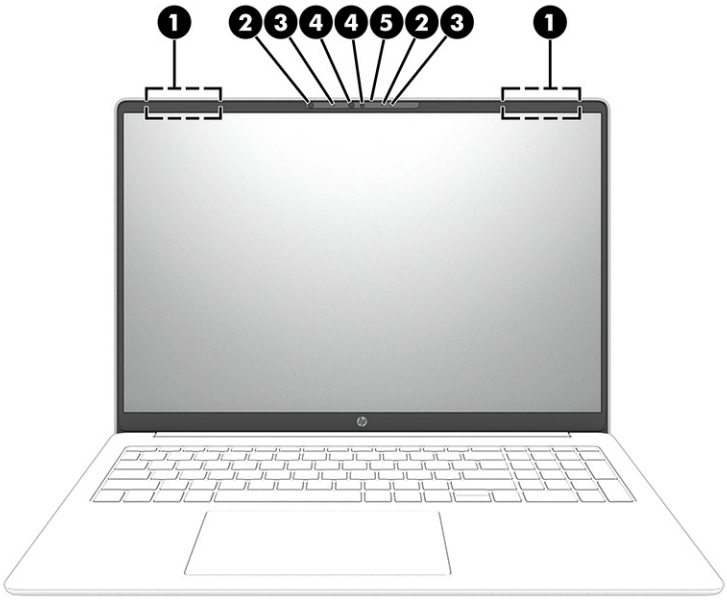

Table 2-3 Display components and their descriptions

	Component	Description
(1)	WLAN antennas (2)*	Send and receive wireless signals to communicate with wireless local area networks (WLANs).
(2)	Camera lights (2)	On: One or more cameras are in use.
(3)	Internal microphones (2)	Record sound.
(4)	Cameras (2)	Allow you to video chat, record video, and record still images. Some cameras also allow a facial recognition logon to Windows, instead of a password logon. **NOTE:** Camera functions vary depending on the camera hardware and software installed on your product.
(5)	Camera privacy cover	By default, the camera lens is uncovered, but you can slide the camera privacy cover to block the camera's view. To use the camera, slide the camera privacy cover in the opposite direction to reveal the lens. **NOTE:** If you have both front-facing and rear-facing cameras, when one camera lens is revealed and ready to use, the other is concealed.

*The antennas are not visible from the outside of the computer. For optimal transmission, keep the areas immediately around the antennas free from obstructions.

For wireless regulatory notices, see the section of the *Regulatory, Safety, and Environmental Notices* that applies to your country or region.

To access this guide:

- Select the **Search** icon in the taskbar, type `HP Documentation` in the search box, and then select **HP Documentation**.

Keyboard area

Keyboards can vary by language.

NOTE: The keyboard area, including the function keys and (select products only) power key, is disabled in stand, tent, and tablet modes. To enable the keyboard, including the power key, change to the clamshell mode.

Touchpad settings and components

Learn the touchpad settings and components.

Touchpad settings

Learn how to adjust touchpad settings.

Adjusting touchpad settings

Use these steps to adjust touchpad settings and gestures.

1. Select the **Search** icon in the taskbar, type `touchpad settings` in the search box, and then press enter.
2. Choose a setting.

Turning on the touchpad

Follow these steps to turn on the touchpad.

1. Select the **Search** icon in the taskbar, type `touchpad settings` in the search box, and then press enter.
2. Using an external mouse, click the **touchpad** button.

   If you are not using an external mouse, press the Tab key repeatedly until the pointer rests on the **touchpad** button. Then press the spacebar to select the button.

Touchpad components

Use this illustration and table to identify the touchpad components.

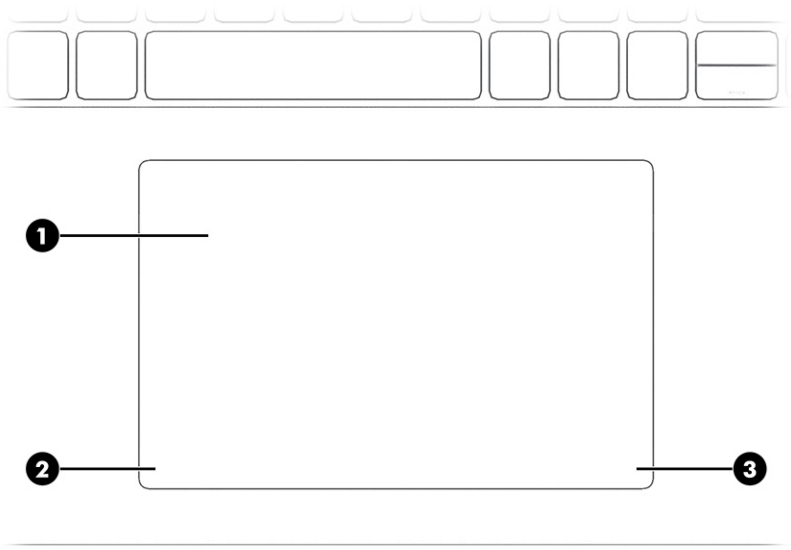

Table 2-4 Touchpad components and their descriptions

	Component	Description
(1)	Touchpad zone	Reads your finger gestures to move the pointer or activate items on the screen.
(2)	Left touchpad button	Functions like the left button on an external mouse.
(3)	Right touchpad button	Functions like the right button on an external mouse.

Lights

Use this illustration and table to identify the lights on the keyboard.

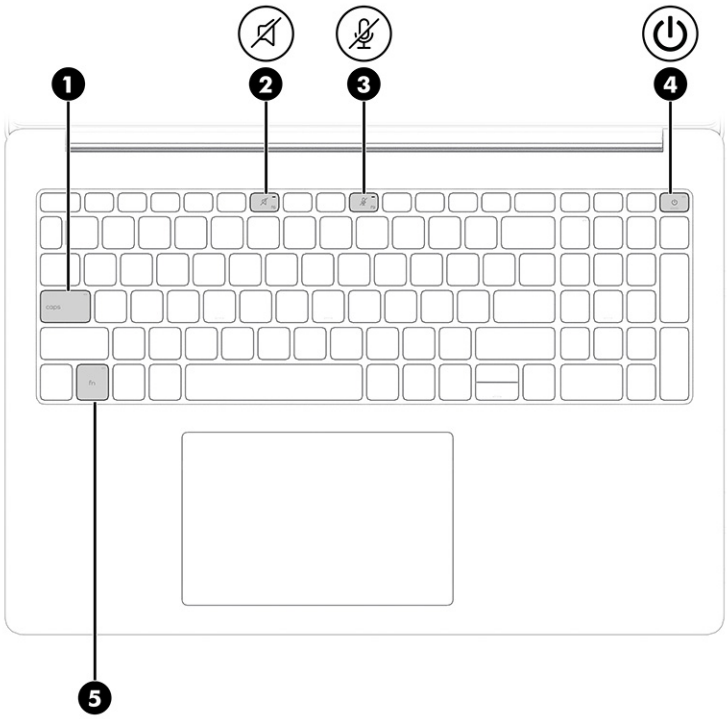

Table 2-5 Lights and their descriptions

		Component	Description
(1)		Caps lock light	On: Caps lock is on, which switches the key input to all capital letters.
(2)		Mute light	• On: Computer sound is off. • Off: Computer sound is on.
(3)		Microphone mute light	• On: Microphone is off. • Off: Microphone is on.
(4)		Power light	• On: The computer is on. • Blinking (select products only): The computer is in the sleep state, a power-saving state. The computer shuts off power to the display and other unnecessary components. • Off: Depending on your computer model, the computer is off, in hibernation, or in sleep. Hibernation is the power-saving state that uses the least amount of power.
(5)		Fn lock light	• On: FN Lock is enabled. • Off: FN Lock is disabled. **NOTE:** On some products, FN Lock is assigned as the secondary function of the left Shift key. To enable FN Lock, press fn + left Shift. Repeat the same key combination again to disable FN Lock.

Special keys

Use this illustration to identify the special keys.

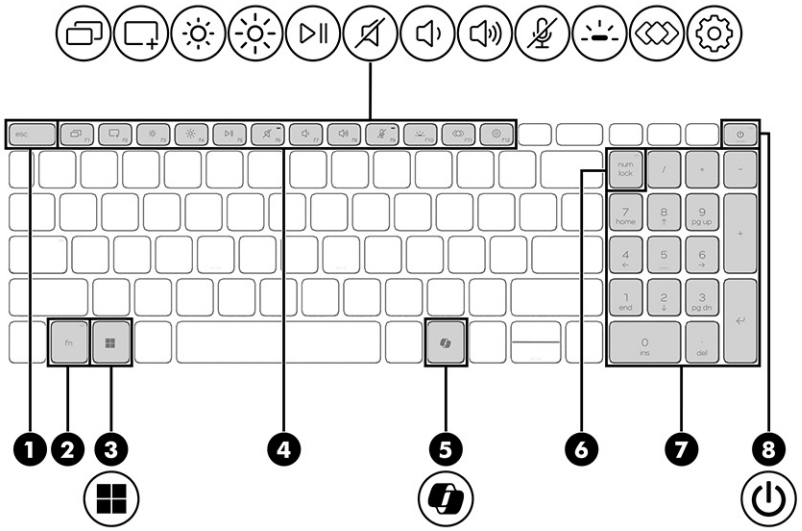

Table 2-6 Special keys and their descriptions

	Component	Description
(1)	esc key	Displays system information when pressed in combination with the fn key.
(2)	fn key	Executes specific functions when pressed in combination with another key. **NOTE:** When using combination shortcut keys, the order in which keys are pressed may affect the result.
(3)	Windows key	Opens the Start menu. **NOTE:** Pressing the Windows key again will close the Start menu.
(4)	Action keys	Execute frequently used system functions as defined by the icon symbols on f1 through f12 function keys.
(5)	Windows Copilot key	Opens Windows Copilot (select products only). **NOTE:** Copilot in Windows (select products only) requires Windows 11. Some features require a neural processing unit (NPU). The timing of feature delivery and availability varies by market and device. You must have a Microsoft account to use the Copilot feature. When the Copilot feature is not available, pressing the Copilot key opens the Bing search engine. See http://aka.ms/WindowsAIFeatures.
(6)	num lock key	Alternates between the navigational and numeric functions on the integrated numeric keypad.
(7)	Integrated numeric keypad	A separate keypad to the right of the alphabet keyboard. When num lock is pressed, the keypad can be used like an external numeric keypad. **NOTE:** If the keypad function is active when the computer is turned off, that function is reinstated when the computer is turned back on.

Table 2-6 Special keys and their descriptions (continued)

	Component	Description
(8)	Power key	• When the computer is off, press the key briefly to turn on the computer. • When the computer is on, press the key briefly to initiate sleep. • When the computer is in the sleep state, press the key briefly to exit sleep (select products only). • When the computer is in hibernation, press the key briefly to exit hibernation. **IMPORTANT:** Pressing and holding down the power key results in the loss of unsaved information. If the computer has stopped responding and shutdown procedures are ineffective, press and hold the power key down for at least 10 seconds to turn off the computer. To learn more about your power settings, see your power options: ▪ Right-click the **Power** icon, and then select **Power and sleep settings**.

Bottom

Identify the bottom components.

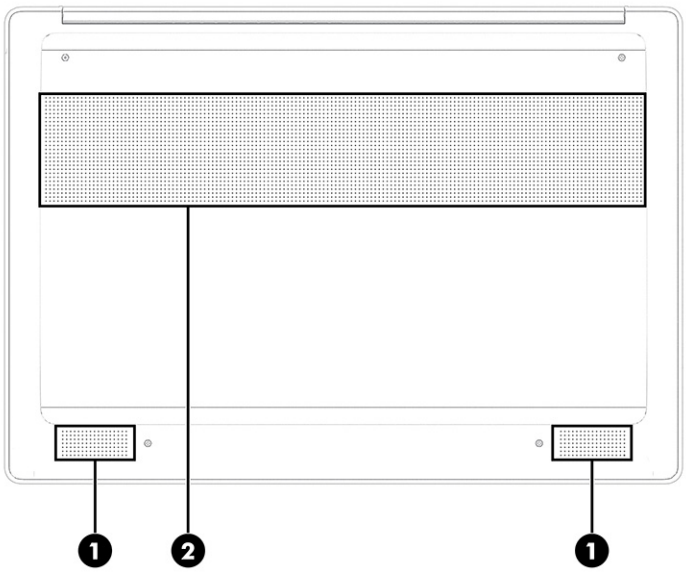

Table 2-7 Bottom components and their descriptions

	Component	Description
(1)	Speakers (2)	Produce sound.

Table 2-7 Bottom components and their descriptions (continued)

	Component	Description
(2)	Vent	Enables airflow to cool internal components. **NOTE:** The computer fan starts up automatically to cool internal components and prevent overheating. It is normal for the internal fan to cycle on and off during routine operation.

Labels

The labels affixed to the computer provide information that you might need when you troubleshoot system problems or travel internationally with the computer. Labels can be in paper form or imprinted on the product.

IMPORTANT: Check the following locations for the labels described in this section: the bottom of the computer, inside the battery bay, under the service door, on the back of the display, or on the bottom of a tablet kickstand.

- Service label—Provides important information to identify your computer. When contacting support, you might be asked for the serial number, the product number, or the model number. Locate this information before you contact support.

  Your service label will resemble the following example:



Table 2-8 Service label components

	Component
(1)	Serial number
(2)	Product ID
(3)	HP product name and model number

- Regulatory labels—Provide regulatory information about the computer.
- Wireless certification labels—Provide information about optional wireless devices and the approval markings for the countries or regions in which the devices have been approved for use.

3 Illustrated parts catalog

Use this chapter to determine the spare parts that are available for the computer.

Computer major components

Use this illustration and table to identify the computer major components.

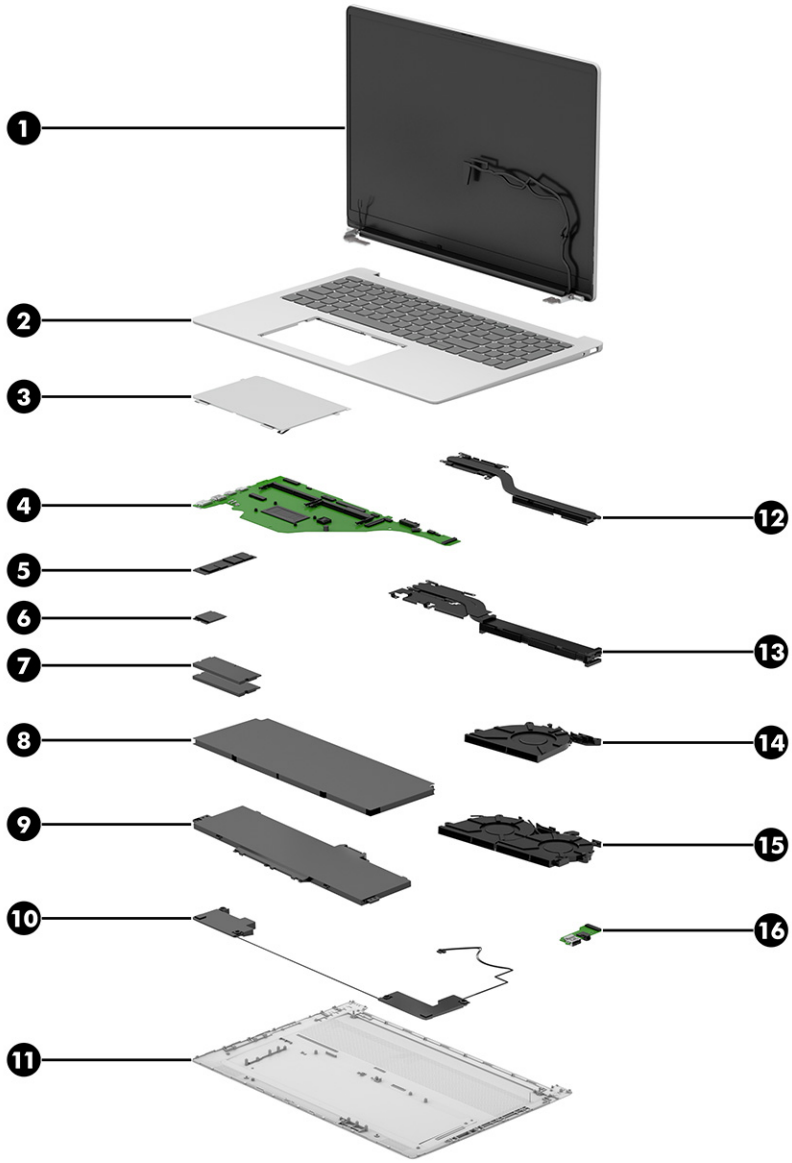

Table 3-1 Computer major component descriptions and part numbers

Item	Component	Spare part number
(1)	**Display assembly** **NOTE:** Display assemblies are offered as spare parts only at a subcomponent level.	not available as a spare part
(2)	**Top cover with keyboard** **NOTE:** For a detailed list of country codes, see Top cover with keyboard on page 71.	
	Meteor silver top cover, iron gray keyboard and clickpad, backlit keyboard with fingerprint reader	P81033-xx1
	Meteor silver top cover, iron gray keyboard and clickpad, backlit keyboard without fingerprint reader	P81034-xx1
	Meteor silver top cover, dark meteor silver keyboard and clickpad, backlit keyboard with fingerprint reader	P81035-xx1
	Meteor silver top cover, dark meteor silver keyboard and clickpad, backlit keyboard without fingerprint reader	P81036-xx1
	Iron gray top cover, keyboard, and clickpad, non-backlit keyboard	P81037-xx1
(3)	**Touchpad** (includes cable)	
	Meteor silver	P81048-001
	Iron gray	P81049-001
(4)	**System board for use in HP 200 G2i 16 inch Notebook PC models with an Intel processor**	
	Intel Core 7 240H processor	P81019-601
	Intel Core 5 220H processor	P81020-601
	Intel Core 5 220U processor	P81021-601
	Intel Core 5 220U processor (models with an OLED panel)	P99148-601
	Intel Core 7 150U processor	P81022-601
	Intel Core 7 150U processor (models with an OLED panel)	P99149-601
	Intel Core 5 120U processor	P81023-601
	Intel Core 5 120U processor (models with an OLED panel)	P99150-601
	Intel Core 3 100U processor	P81024-601
	Intel Core 3 100U processor (models with an OLED panel)	P99151-601
	Intel Core 3 N355 processor with 16 GB system memory	Q09448-601
	Intel Core 3 N355 processor with 8 GB system memory	P81025-601
	Intel Core 3 N355 processor with 8 GB system memory and 128 GB UFS storage	P81028-601
	Intel N250 processor with 8 GB system memory	P81026-601
	Intel N150 processor with 8 GB system memory	P81027-601
	Intel N150 processor with 8 GB system memory and 128 GB UFS storage	P81029-601
	System board for use in HP 200 G2Ri 16 inch Notebook PC models with an Intel processor	
	Intel Ultra 7 255H processor	Q03464-601
	Intel Ultra 5 225H processor	Q03463-601

Table 3-1 Computer major component descriptions and part numbers (continued)

Item	Component	Spare part number
	Intel Ultra 7 255U processor	Q03455-601
	Intel Ultra 7 255U processor (OLED models)	Q03462-601
	Intel Ultra 7 255U processor and 32 GB system memory	Q16625-601
	Intel Ultra 7 255U processor and 32 GB system memory (PRC)	Q16626-601
	Intel Ultra 7 255U processor and 16 GB system memory	Q16623-601
	Intel Ultra 7 255U processor and 16 GB system memory (PRC)	Q16624-601
	Intel Ultra 5 235U processor	Q03454-601
	Intel Ultra 5 235U processor (OLED models)	Q03461-601
	Intel Ultra 5 225U processor	Q03453-601
	Intel Ultra 5 225U processor (OLED models)	Q03460-601
	Intel Ultra 5 225U processor and 32 GB system memory	Q16619-601
	Intel Ultra 5 225U processor and 32 GB system memory (PRC)	Q16620-601
	Intel Ultra 5 225U processor and 16 GB system memory	Q16617-601
	Intel Ultra 5 225U processor and 16 GB system memory (PRC)	Q16618-601
	Intel Ultra 5 225U processor and 8 GB system memory	Q16621-601
	Intel Ultra 5 225U processor and 8 GB system memory (PRC)	Q16622-601
	Intel Core 7 350 processor	Q03452-601
	Intel Core 7 350 processor (OLED models)	Q03459-601
	Intel Core 7 350 processor and 16 GB system memory	Q16613-601
	Intel Core 7 350 processor and 16 GB system memory (PRC)	Q16614-601
	Intel Core 7 350 processor and 8 GB system memory	Q16615-601
	Intel Core 7 350 processor and 8 GB system memory (PRC)	Q16616-601
	Intel Core 5 330 processor	Q03451-601
	Intel Core 5 330 processor (OLED models)	Q03458-601
	Intel Core 5 320 processor	Q03450-601
	Intel Core 5 320 processor (OLED models)	Q03457-601
	Intel Core 5 320 processor and 16 GB system memory	Q16609-601
	Intel Core 5 320 processor and 16 GB system memory (PRC)	Q16610-601
	Intel Core 5 320 processor and 8 GB system memory	Q16611-601
	Intel Core 5 320 processor and 8 GB system memory (PRC)	Q16612-601
	Intel Core 5 315 processor	Q03449-601
	Intel Core 5 315 processor (OLED models)	Q03456-601
	Intel Core 3 304 processor	Q25541-601
	Intel Core 3 304 processor (OLED models)	Q25542-601

Table 3-1 Computer major component descriptions and part numbers (continued)

Item	Component	Spare part number
	System board for use in models with an AMD processor	
	AMD Ryzen 7 H 255 processor	P84780-601
	AMD Ryzen 7 250 processor	P84777-601
	AMD Ryzen 7 250 processor (models with an OLED panel)	P99496-601
	AMD Ryzen 5 220 processor	P84778-601
	AMD Ryzen 5 220 processor (models with an OLED panel)	P99497-601
	AMD Ryzen 3 210 processor	P84779-601
	AMD Ryzen 3 210 processor (models with an OLED panel)	P99498-601
	AMD Ryzen 5 40 processor and 8 GB system memory	P84781-601
	AMD Ryzen 5 40 processor and 16 GB system memory (PRC)	Q08110-601
	AMD Ryzen 5 40 processor and 8 GB system memory (PRC)	Q08111-601
	AMD Ryzen 3 30 processor and 8 GB system memory	P84782-601
	AMD Gold 20 processor and 8 GB system memory	P84783-601
	AMD Silver 10 processor and 8 GB system memory	P84784-601
(5)	**SSD** (PCIe)	
	1 TB, Gen4	N77394-005
	512 GB Gen4	N77392-005
	256 GB Gen4	N77391-005
	256 GB, Gen3	P90856-005
(6)	**WLAN module for use in models with an Intel processor**	
	Realtek Wi-Fi 6 RTL8852BE-VT + Bluetooth 5.4 (802.11ax 2 × 2)	P06350-005
	Realtek Wi-Fi 7 RTL8922AE-VS + Bluetooth 6.0 (802.11be 2 × 2)	P44408-005
	WLAN module for use in models with an AMD processor	
	MediaTek MT7920 Wi-Fi 6 + Bluetooth 5.4 WW WLAN	P17386-005
	Realtek Wi-Fi 7 RTL8922AE-VS + Bluetooth 6.0 (802.11be 2 × 2)	P44408-005
(7)	**Memory modules** (DDR-5600)	
	32 GB, non-Micron (nM)	N77400-005
	24 GB (nM)	P55196-005
	16 GB (nM)	N77399-005
	16 GB	N38627-005
	8 GB (nM)	N77398-005
	8 GB	N37792-005
	Battery (includes revive kit)	
(8)	Battery (4 cell, 68 Wh)	P13980-001

Table 3-1 Computer major component descriptions and part numbers (continued)

Item	Component	Spare part number
(9)	Battery (3 cell, 41 Wh)	N21969-001
(10)	**Speakers** (left and right)	P79621-001
(11)	**Bottom cover**	
	Iron gray	P81044-001
	Meteor silver	P81045-001
	Heat sink	
(12)	Heat sink (15 W, Intel Core)	P79737-001
	Heat sink (15 W models, Ryzen 3 and Athlon processors)	P79396-001
	Heat sink (Intel N355 processor and AMD Ryzen 5 40/Ryzen 3 30 processors)	P79736-001
	Heat sink (9 W models, Intel N150 processor)	P79735-001
	Heat sink (15 W models, AMD processors)	P79581-001
	Heat sink (Intel 350/330/320/315/304 processors)	Q03465-001
(13)	Heat sink (45 W models, Intel 255U/235U/225U processors)	P79738-001
	Heat sink (45 W models, 255H/225H processors)	Q03039-001
	Heat sink (45 W models, AMD processors)	P79582-001
	Fans	
(14)	Fan (15 W models)	P79583-001
(15)	Fan (45 W models)	P79584-001
(16)	**I/O board**	P81046-001

Display assembly subcomponents

Use this illustration and table to identify the display assembly subcomponents.

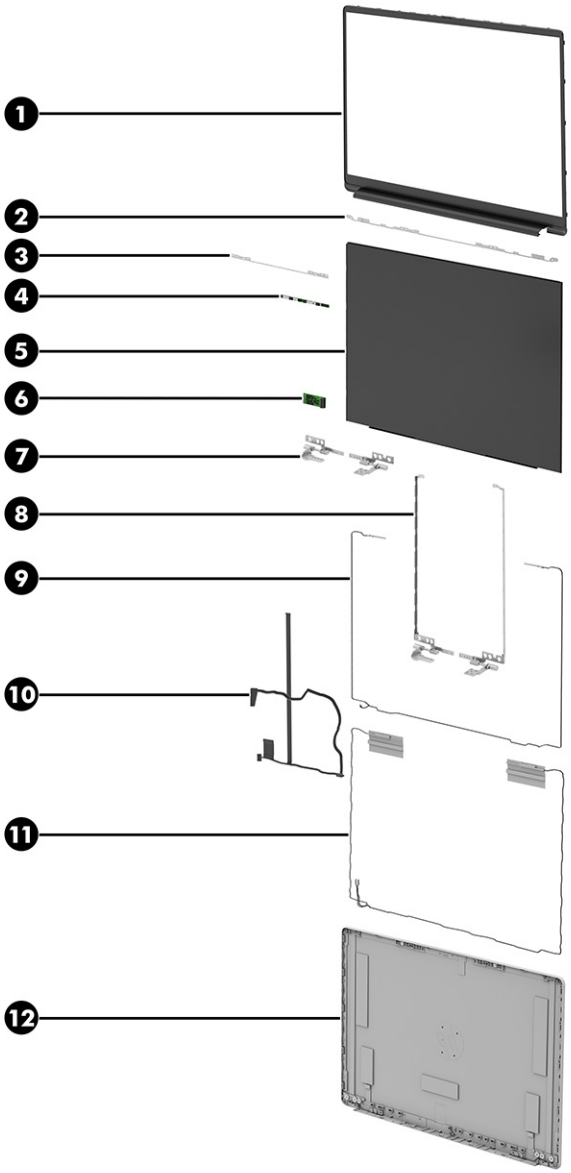

Table 3-2 Display component descriptions and part numbers

Item	Component	Spare part number
(1)	**Display bezel**	
	IR camera models, meteor silver	P81056-001
	Non-IR camera models, meteor silver	P81057-001
	Non-IR camera models, iron gray	P81059-001
(2)	**Camera support bracket, non-OLED models**	not available as a spare part
(3)	**Camera support bracket, OLED models**	not available as a spare part
(4)	**Camera module** (includes cable, bezel, and panel stretchable adhesive tape)	

Table 3-2 Display component descriptions and part numbers (continued)

Item	Component	Spare part number
	FHD	P79623-001
	FHD + IR	P79624-001
(5)	**Display panel** (includes cable, bezel, and panel stretchable tape)	
	WUXGA, antiglare, 300 nits	P81030-001
	2.5 K, antiglare, 500 nits	P81031-001
	BrightView, OLED, 300 nits	P79575-001
(6)	**OLED board**	P79627-001
(7)	**Hinges, OLED models**	
	Plastic models	P79625-001
	Aluminum models	P79626-001
(8)	**Hinges, non-OLED models** (left and right, includes bezel and panel stretchable adhesive tape)	
	Plastic models	P79625-001
	Aluminum models	P79626-001
	Plastic models, 500 nits	P92299-001
(9)	**Wireless antenna kit, non-OLED models** (included in the Cable Kit)	P92300-001
(10)	**Display panel cable** (includes bezel and panel stretchable adhesive tape)	P79622-001
(11)	**Wireless antenna kit, OLED models** (included in the Cable Kit)	P92300-001
(12)	**Display back cover** (includes wireless antennas and panel stretchable tape)	
	Meteor silver, OLED, 300 nit panel	P81038-001
	Meteor silver, plastic, 500 nit panel	P81039-001
	Meteor silver, aluminum, 500 nit panel	P81040-001
	Meteor silver, plastic, 300/400 nit panel	P81042-001
	Meteor silver, aluminum, 300/400 nit panel	P81043-001
	Iron gray, aluminum, 300/400 nit panel	P81041-001

Miscellaneous parts

Use this table to identify the miscellaneous parts.

Table 3-3 Miscellaneous part descriptions and part numbers

Component	Spare part number
Screw Kit	P81448-001
Misc Parts Kit (includes connector protective covers, WLAN module protective tape, panel rubber, fixed base hook, frame fan, and conductive tape)	P81447-001
Cable and Antenna Kit (includes I/O board cable, touchpad cable, battery cable, wireless antennas, and bezel and display panel adhesive tapes)	P92300-001

Table 3-3 Miscellaneous part descriptions and part numbers (continued)

Component	Spare part number
Tape Kit (includes all display panel and display bezel tapes)	P92301-001
Bracket Kit (includes brackets for the display panel, USB port, SSD, battery, touchpad, and fingerprint reader)	P81047-001
Fingerprint reader	P81050-001
RJ-45 door, aluminum, meteor silver models	P81052-001
RJ-45 door, plastic, meteor silver/iron gray models	P81053-001
HP USB Mouse	L95713-001
HP 435 Wireless Mouse	M62277-001
HP 235 Wireless Mouse	M86086-001
HP 501/515 Rechargeable Mouse	N86885-801
HP 320K Wired Keyboard	P24877-001
HP Everyday 16 Laptop Bag	P04345-001
HP Everyday 16 Laptop Backpack	P04346-001
HDMI-to-VGA adapter	701943-001
External DVD drive	747080-001
AC adapter (USB-C)	
100 W, GaN, 2 pin, WM, 2.0 m (6.5 ft), FD	P58631-001
100 W, GaN, 2 pin, WM, 2.0 m (6.5 ft), FX	P58632-001
100 W, slim, straight	P55546-001
100 W, PD, nPFC, 3 pin	N57045-001
65 W, GaN, 2 pin, WM, 2.0 m (6.5 ft), FX	P58629-001
65 W, GaN, 2 pin, WM, 2.0 m (6.5 ft), FD	P58630-001
65 W	P49363-001
65 W, standard, straight	P38779-001
65 W, wall mount, 2 pin	P68491-001
45 W, standard, straight	P38778-001
Power cords (C5, conventional, straight, 1.0 m [3.3 ft])	
Argentina	L19357-001
Australia	L19358-001
Denmark	L19360-001
Europe (Austria, Belgium, Finland, France, Germany, the Netherlands, Norway, and Sweden)	L19361-001
India	L19363-001
Israel	L19362-001
Italy	L19364-001
Japan	L19365-001

Table 3-3 Miscellaneous part descriptions and part numbers (continued)

Component	Spare part number
North America	L19367-001
PRC	L19368-001
South Africa	L19369-001
South Korea	L19366-001
Switzerland	L19370-001
Taiwan	L19372-001
Thailand	L19371-001
Thailand (bundle)	M85418-001
United Kingdom	L19373-001
Duckhead power cord (non-standard, halogen free)	
Argentina	P57788-001
Australia	P57784-001
Europe (Austria, Belgium, Finland, France, Germany, the Netherlands, Norway, and Sweden)	P57782-001
India	P57790-001
Japan	L33157-001
PRC	P57787-001
South Korea	P57785-001
Thailand	P57786-001
United Kingdom	P57783-001
Power cord, C5 red conventional, 1.83 m (6 ft)	P79415-001

4 Removal and replacement procedures preliminary requirements

Use this information to properly prepare to disassemble and reassemble the computer.

Tools required

You need the following tools to complete the removal and replacement procedures.

- Tweezers
- Nonconductive, nonmarking pry tool
- Magnetic Phillips P1 screwdriver

Service considerations

The following sections include some of the considerations that you must keep in mind during disassembly and assembly procedures.

NOTE: As you remove each subassembly from the computer, place the subassembly and all accompanying screws away from the work area to prevent damage.

Plastic parts

Using excessive force during disassembly and reassembly can damage plastic parts.

Cables and connectors

Handle cables with extreme care to avoid damage.

IMPORTANT: When servicing the computer, be sure that cables are placed in their proper locations during the reassembly process. Improper cable placement can damage the computer.

Apply only the tension required to unseat or seat the cables during removal and insertion. Handle cables by the connector whenever possible. In all cases, avoid bending, twisting, or tearing cables. Be sure that cables are routed so that they cannot be caught or snagged as you remove or replace parts. Handle flex cables with extreme care; these cables tear easily.

Drive handling

Note the following guidelines when handling drives.

IMPORTANT: Drives are fragile components. Handle them with care. To prevent damage to the computer, damage to a drive, or loss of information, observe these precautions:

- Before removing or inserting a hard drive, shut down the computer. If you are unsure whether the computer is off or in hibernation or sleep mode, turn the computer on, and then shut it down through the operating system.

- Before handling a drive, be sure that you are discharged of static electricity. While handling a drive, avoid touching the connector.
- Before removing an optical drive, be sure that a disc is not in the drive, and be sure that the optical drive tray is closed.
- Handle drives on surfaces covered with at least 2.54 cm (1 inch) of shock-proof foam.
- Avoid dropping drives from any height onto any surface.
- After removing a hard drive or an optical drive, place it in a static-proof bag.
- Avoid exposing an internal hard drive to products that have magnetic fields, such as monitors or speakers.
- Avoid exposing a drive to temperature extremes or liquids.
- If a drive must be mailed, place the drive in a bubble pack mailer or other suitable form of protective packaging, and label the package "FRAGILE."

Electrostatic discharge information

A sudden discharge of static electricity from your finger or other conductor can destroy static-sensitive devices or microcircuitry. Often the spark is neither felt nor heard, but damage occurs. An electronic device exposed to electrostatic discharge (ESD) might not appear to be affected at all and can work perfectly throughout a normal cycle. The device might function normally for a while, but it has been degraded in the internal layers, reducing its life expectancy.

Networks built into many integrated circuits provide some protection, but in many cases, the discharge contains enough power to alter device parameters or melt silicon junctions.

IMPORTANT: To prevent damage to the device when you remove or install internal components, observe these precautions:

- Keep components in their electrostatic-safe containers until you are ready to install them.
- Before touching an electronic component, discharge static electricity by using the guidelines described in Personal grounding methods and equipment on page 28.
- Avoid touching pins, leads, and circuitry. Handle electronic components as little as possible.
- If you remove a component, place it in an electrostatic-safe container.

Generating static electricity

Follow these static electricity guidelines.

- Different activities generate different amounts of static electricity.
- Static electricity increases as humidity decreases.

Table 4-1 Static electricity occurrence based on activity and humidity

Event	55% relative humidity	40% relative humidity	10% relative humidity
Walking across carpet	7500 V	15,000 V	35,000 V
Walking across vinyl floor	3000 V	5000 V	12,000 V
Motions of bench worker	400 V	800 V	6000 V
Removing dual in-line packages (DIPs) from plastic tube	400 V	700 V	2000 V
Removing DIPs from vinyl tray	2000 V	4000 V	11,500 V
Removing DIPs from polystyrene foam	3500 V	5000 V	14,500 V
Removing bubble pack from PCB (printed circuit board)	7000 V	20,000 V	26,500 V
Packing PCBs in foam-lined box	5000 V	11,000 V	21,000 V

NOTE: Multiple electric components can be packaged together in plastic tubes, trays, or polystyrene foam.

NOTE: As little as 700 V of static electricity can degrade a product.

Preventing electrostatic damage to equipment

Many electronic components are sensitive to ESD. Circuitry design and structure determine the degree of sensitivity.

The following packaging and grounding precautions are necessary to prevent static electricity damage to electronic components:

- To avoid hand contact, transport products in static-safe containers such as tubes, bags, or boxes.
- Protect all electrostatic parts and assemblies with conductive or approved containers or packaging.
- Keep electrostatic-sensitive parts in their containers until they arrive at static-free stations.
- Place items on a grounded surface before removing them from their container.
- Always be properly grounded when touching a sensitive component or assembly.
- Avoid contact with pins, leads, or circuitry.
- Place reusable electrostatic-sensitive parts from assemblies in protective packaging or conductive foam.

Personal grounding methods and equipment

Using certain equipment can prevent static electricity damage to electronic components.

- **Wrist straps** are flexible straps with a maximum of 1 MΩ ±10% resistance in the ground cords. To provide proper ground, wear a strap snug against bare skin. Verify that the ground cord is connected and fits snugly into the banana plug connector on the grounding mat or workstation.
- You can use **heel straps, toe straps, and boot straps** at standing workstations. These straps are compatible with most types of shoes or boots. On conductive floors or dissipative floor mats, use them on both feet with a maximum of 1 MΩ ±10% resistance between the operator and ground.

Table 4-2 Static shielding protection levels

Method	Voltage
Antistatic plastic	1500
Carbon-loaded plastic	7500
Metalized laminate	15,000

Grounding the work area

To prevent static damage at the work area, follow these precautions.

- Cover the work surface with approved static-dissipative material.
- Use a wrist strap connected to a properly grounded work surface and use properly grounded tools and equipment.
- Use static-dissipative mats, foot straps, or air ionizers to give added protection.
- Handle electrostatic sensitive components, parts, and assemblies by the case or PCB laminate. Handle them only at static-free work areas.
- Turn off power and input signals before inserting and removing connectors or test equipment.
- Use fixtures made of static-safe materials when fixtures must directly contact dissipative surfaces.
- Keep the work area free of nonconductive materials, such as ordinary plastic assembly aids and polystyrene foam.
- Use conductive field service tools, such as cutters, screwdrivers, and vacuums.
- Avoid contact with pins, leads, or circuitry.

Recommended materials and equipment

HP recommends certain materials and equipment to prevent static electricity.

- Antistatic tape
- Antistatic smocks, aprons, or sleeve protectors
- Conductive bins and other assembly or soldering aids
- Conductive foam
- Conductive tabletop workstations with ground cord of 1 MΩ ±10% resistance
- Static-dissipative table or floor mats with hard tie to ground
- Field service kits
- Static awareness labels
- Wrist straps and footwear straps providing 1 MΩ ±10% resistance
- Material handling packages
- Conductive plastic bags

- Conductive plastic tubes
- Conductive tote boxes
- Opaque shielding bags
- Transparent metallized shielding bags
- Transparent shielding tubes

Cleaning your computer

Cleaning your computer regularly removes dirt and debris so that your device continues to operate at its best. Use the following information to safely clean the external surfaces of your computer.

Enabling HP Easy Clean (select products only)

HP Easy Clean helps you to avoid accidental input while you clean the computer surfaces. This software disables devices such as the keyboard, touch screen, and touchpad for a preset amount of time so that you can clean all computer surfaces.

1. Start HP Easy Clean in one of the following ways:
   - Select the **Start** menu, and then select **HP Easy Clean**.
   - Select the **HP Easy Clean** icon in the taskbar.
   - Select **Start**, and then select the **HP Easy Clean** tile.
2. Now that your device is disabled for a short period, see Removing dirt and debris from your computer on page 30 for the recommended steps to clean the high-touch, external surfaces on your computer. After you remove the dirt and debris, you can also clean the surfaces with a disinfectant. See Cleaning your computer with a disinfectant on page 31 for guidelines to help prevent the spread of harmful bacteria and viruses.

Removing dirt and debris from your computer

Here are the recommended steps to clean dirt and debris from your computer.

For computers with wood veneer, see Caring for wood veneer (select products only) on page 32.

1. Wear disposable gloves made of latex (or nitrile gloves, if you are latex-sensitive) when cleaning the surfaces.
2. Turn off your device and unplug the power cord and other connected external devices. Remove any installed batteries from items such as wireless keyboards.

> ⚠ **CAUTION:** To prevent electric shock or damage to components, never clean a product while it is turned on or plugged in.

3. Moisten a microfiber cloth with water. The cloth should be moist, but not dripping wet.

> **IMPORTANT:** To avoid damaging the surface, avoid abrasive cloths, towels, and paper towels.

4. Wipe the exterior of the product gently with the moistened cloth.

IMPORTANT: Keep liquids away from the product. Avoid getting moisture in any openings. If liquid makes its way inside your HP product, it can cause damage to the product. Do not spray liquids directly on the product. Do not use aerosol sprays, solvents, abrasives, or cleaners containing hydrogen peroxide or bleach that might damage the finish.

5. Start with the display (if applicable). Wipe carefully in one direction, and move from the top of the display to the bottom. Finish with any flexible cables, like power cord, keyboard cable, and USB cables.

6. Be sure that surfaces have completely air-dried before turning the device on after cleaning.

7. Discard the gloves after each cleaning. Clean your hands immediately after you remove the gloves.

See Cleaning your computer with a disinfectant on page 31 for recommended steps to clean the high-touch, external surfaces on your computer to help prevent the spread of harmful bacteria and viruses.

Cleaning your computer with a disinfectant

The World Health Organization (WHO) recommends cleaning surfaces, followed by disinfection, as a best practice for preventing the spread of viral respiratory illnesses and harmful bacteria.

After cleaning the external surfaces of your computer using the steps in Removing dirt and debris from your computer on page 30, Caring for wood veneer (select products only) on page 32, or both, you might also choose to clean the surfaces with a disinfectant. A disinfectant that is within HP's cleaning guidelines is an alcohol solution consisting of 70% isopropyl alcohol and 30% water. This solution is also known as rubbing alcohol and is sold in most stores.

Follow these steps when disinfecting high-touch, external surfaces on your computer:

1. Wear disposable gloves made of latex (or nitrile gloves, if you are latex-sensitive) when cleaning the surfaces.

2. Turn off your device and unplug the power cord and other connected external devices. Remove any installed batteries from items such as wireless keyboards.

CAUTION: To prevent electric shock or damage to components, never clean a product while it is turned on or plugged in.

3. Moisten a microfiber cloth with a mixture of 70% isopropyl alcohol and 30% water. The cloth should be moist, but not dripping wet.

CAUTION: Do not use any of the following chemicals or any solutions that contain them, including spray-based surface cleaners: bleach, peroxides (including hydrogen peroxide), acetone, ammonia, ethyl alcohol, methylene chloride, or any petroleum-based materials, such as gasoline, paint thinner, benzene, or toluene.

IMPORTANT: To avoid damaging the surface, avoid abrasive cloths, towels, and paper towels.

4. Wipe the exterior of the product gently with the moistened cloth.

IMPORTANT: Keep liquids away from the product. Avoid getting moisture in any openings. If liquid makes its way inside your HP product, it can cause damage to the product. Do not spray liquids directly on the product. Do not use aerosol sprays, solvents, abrasives, or cleaners containing hydrogen peroxide or bleach that might damage the finish.

5. Start with the display (if applicable). Wipe carefully in one direction, and move from the top of the display to the bottom. Finish with any flexible cables, like power cord, keyboard cable, and USB cables.
6. Be sure that surfaces have completely air-dried before turning the device on after cleaning.
7. Discard the gloves after each cleaning. Clean your hands immediately after you remove the gloves.

Caring for wood veneer (select products only)

Your product might feature high-quality wood veneer. As with all natural wood products, proper care is important for best results over the life of the product. Because of the nature of natural wood, you might see unique variations in the grain pattern or subtle variations in color, which are normal.

- Clean the wood with a dry, static-free microfiber cloth or chamois.
- Avoid cleaning products containing substances such as ammonia, methylene chloride, acetone, turpentine, or other petroleum-based solvents.
- Do not expose the wood to sun or moisture for long periods of time.
- If the wood becomes wet, dry it by dabbing with an absorbent, lint-free cloth.
- Avoid contact with any substance that might dye or discolor the wood.
- Avoid contact with sharp objects or rough surfaces that might scratch the wood.

See Removing dirt and debris from your computer on page 30 for the recommended steps to clean the high-touch, external surfaces on your computer. After you remove the dirt and debris, you can also clean the surfaces with a disinfectant. See Cleaning your computer with a disinfectant on page 31 for sanitizing guidelines to help prevent the spread of harmful bacteria and viruses.

Packaging and transporting guidelines

Follow these grounding guidelines when packaging and transporting equipment.

- To avoid hand contact, transport products in static-safe tubes, bags, or boxes.
- Protect ESD-sensitive parts and assemblies with conductive or approved containers or packaging.
- Keep ESD-sensitive parts in their containers until the parts arrive at static-free workstations.
- Place items on a grounded surface before removing items from their containers.
- Always be properly grounded when touching a component or assembly.
- Store reusable ESD-sensitive parts from assemblies in protective packaging or nonconductive foam.
- Use transporters and conveyors made of antistatic belts and roller bushings. Be sure that mechanized equipment used for moving materials is wired to ground and that proper materials are selected to avoid static charging. When grounding is not possible, use an ionizer to dissipate electric charges.

Accessing support information

Use this information to find the HP support that you need.

Table 4-3 Support information locations

Service consideration	Path to access information
Records of reported failure incidents stored on the computer	**Windows:** Pre-operating system failures are logged in the BIOS Event Log. To view the BIOS Event Log: 1. Press the power button. 2. Immediately and repeatedly press esc when the power button light turns white. **NOTE:** If you do not press esc at the appropriate time, you must restart the computer and again repeatedly press esc when the power button light turns white to access the utility. 3. Press f10 to enter the BIOS setup. 4. Complete one of these tasks: • (On commercial products) Under the **Main** tab, select **BIOS event log**, and then select **View BIOS Event Log**. • (On consumer products) Under the **Main** tab, select **System Log**. Post-operating system failures are logged in the Event Viewer. 1. Turn on the computer and allow the operating system to open. 2. Select the search icon in the taskbar. 3. Type `Event Viewer`, and then press enter. 4. Select the log from the left panel. Details display in the right panel. **ChromeOS™:** 1. Go to support.google.com/chrome. 2. Search `collect Chrome device logs`.
Technical bulletins and alerts	To find technical bulletins, alerts, guides, and whitepapers: 1. Go to www.hp.com/support. 2. Follow the instructions to find your product. 3. Select **Bulletins and Alerts** to view technical bulletins.
Repair professionals	To locate repair professionals: 1. Go to www.hp.com. 2. Select **Authorized service providers**. 3. Select your location.
Component and diagnosis information, failure detection, and required action	To locate diagnosis information and actions: 1. Go to http://www.hp.com/go/techcenter/pcdiags. 2. Select the issue you want to diagnose.

5 Removal and replacement procedures for Customer Self-Repair parts

This chapter provides removal and replacement procedures for Customer Self-Repair parts.

NOTE: The Customer Self-Repair program is not available in all locations. Installing a part that is not supported by the Customer Self-Repair program can void your warranty. Check your warranty to determine whether Customer Self-Repair is supported in your location.

NOTE: The HP Support YouTube Channel (in English) has videos that provide step-by-step removal and replacement instructions for many common parts and models.

Component replacement procedures

Use these procedures to remove and replace computer components.

NOTE: Details about your computer, including model, serial number, product key, and length of warranty, are on the service tag at the bottom of your computer.

NOTE: HP continually improves and changes product parts. For complete and current information about supported parts for your computer, go to https://partsurfer.hp.com/, select your country or region, and then follow the on-screen instructions.

Make special note of each screw size and location during removal and replacement.

Preparation for disassembly

Use these procedures to remove and replace computer components.

For initial safety procedures, see Removal and replacement procedures preliminary requirements on page 26.

1. Turn off the computer. If you are unsure whether the computer is off or in hibernation or sleep mode, turn the computer on, and then shut it down through the operating system.
2. Disconnect the power from the computer by unplugging the power cord from the computer.
3. Disconnect all external devices from the computer.

Bottom cover

Use this procedure and illustration to remove the bottom cover.

Table 5-1 Bottom cover descriptions and part numbers

Description	Spare part number
Iron gray	P81044-001
Meteor silver	P81045-001

Before removing the bottom cover, prepare the computer for disassembly (see Preparation for disassembly on page 34).

Remove the bottom cover:

1. Position the computer upside down.
2. Loosen the captive Phillips screw **(1)** on the bottom cover.
3. Remove the Phillips M2.0 × 9.0 screw **(2)** from the bottom cover.
4. Remove the two Phillips M2.0 × 4.0 screws **(3)** from the bottom cover.

NOTE: The bottom cover includes a captive (not removable) screw that causes the cover to pop up when you loosen the screw. After the cover pops up, do not continue to loosen the captive screw.

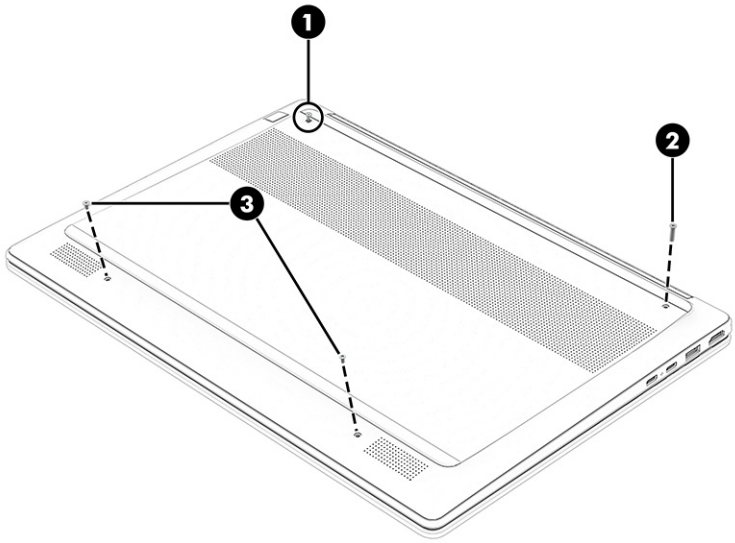

5. Insert a tool **(1)** into the seam near the captive screw at the top left of the bottom cover to release it.
6. Release bottom left **(2)** and bottom right **(3)** sides of the bottom cover.

7. Release the bottom of the bottom cover **(4)** to remove it from the computer.

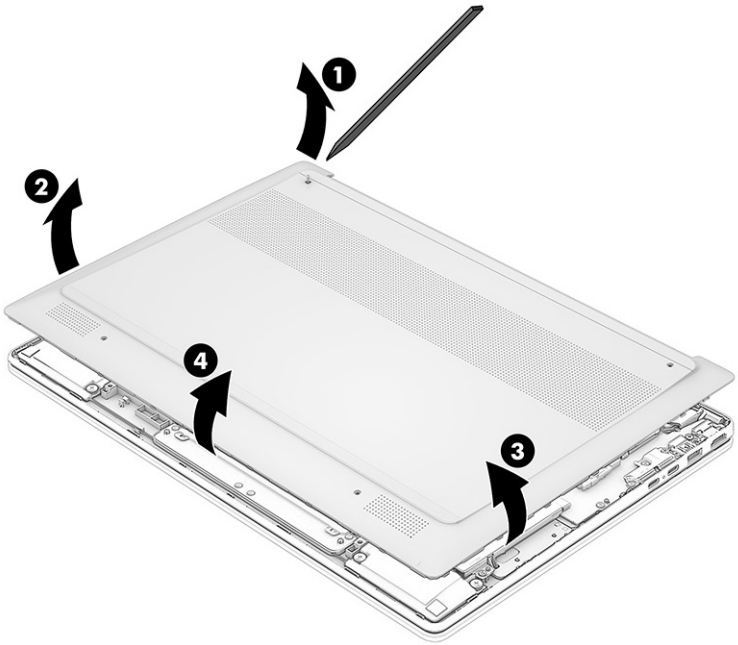

Reverse the removal procedures to replace the bottom cover.

When replacing the bottom cover, remove the Feature Byte label from the inside of the old bottom cover and place it on the inside of the new bottom cover. Be sure to keep this label with the computer, because the label is required for any future repairs.

You can locate product labels:

- Laser etched on the old bottom cover.
- In HP System Information by pressing fn + esc when you turn on the computer.

NOTE: Bottom cover appearance might vary.

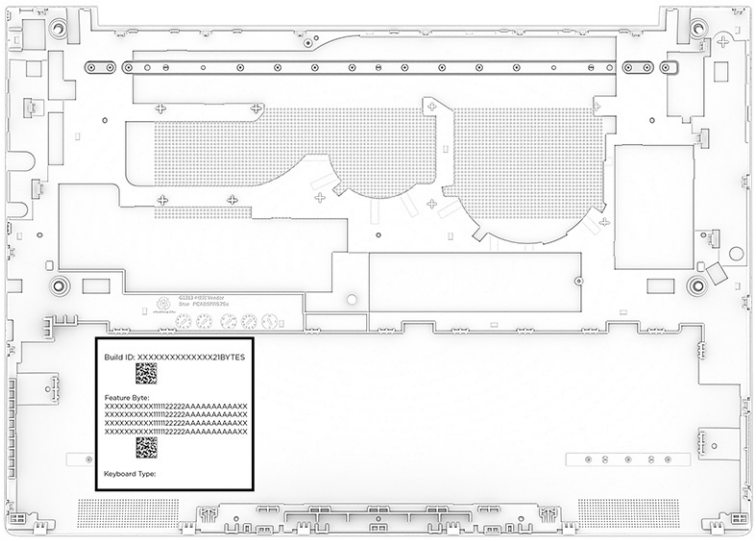

Hand write the product information onto the label of the new bottom cover. Use a ballpoint pen or marker to avoid smudging.

Example of label information



New bottom cover label location

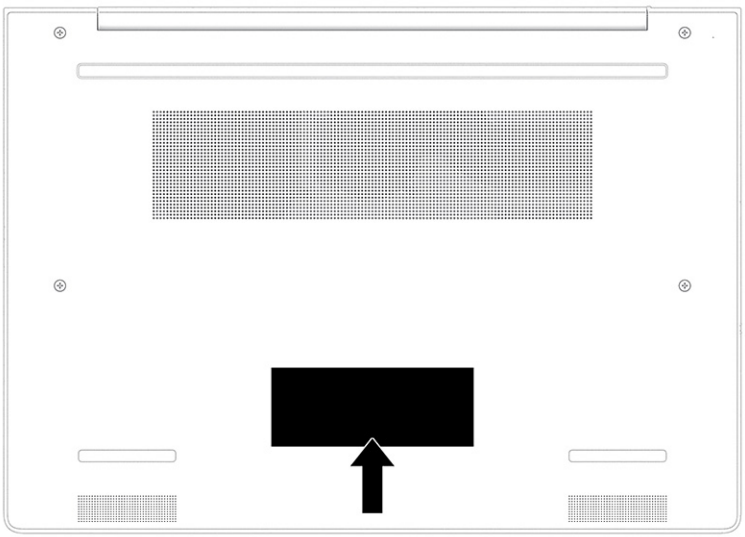

Battery

The battery removal procedure differs depending on whether you are removing and replacing the existing battery or installing a new battery. You must use a revive kit to install a new battery.

- To remove and replace the existing battery, see Removing and reinstalling the same battery on page 38.
- To install a new battery, see Installing a new battery on page 40.

Removing and reinstalling the same battery

Use these procedures and illustrations to remove the battery and reinstall it.

⚠ **WARNING!** To avoid personal injury and damage to the product:

- Do *not* puncture, twist, or crack the battery.
- Do *not* cause an external puncture or rupture to the battery, which can cause a short inside the battery that can result in battery thermal runaway.
- Do *not* handle or touch the battery enclosure with sharp objects such as tweezers or pliers, which might puncture the battery.
- Do *not* compress or squeeze the battery case with tools or heavy objects stacked on top of the case. These actions can apply undue force on the battery.
- Do *not* touch the connectors with any metallic surface or object, such as metal tools, screws, or coins, which can cause shorting across the connectors.

For additional battery information, see the *Regulatory, Safety, and Environmental Notices*. To access this guide, select the **Search** icon in the taskbar, type `HP Documentation` in the search box, and then select **HP Documentation**.

Before removing the battery, follow these steps:

1. Prepare the computer for disassembly (see Preparation for disassembly on page 34).
2. Remove the bottom cover (see Bottom cover on page 34).

⚠ **WARNING!** To reduce potential safety issues, use only the user-replaceable battery provided with the computer, a replacement battery provided by HP, or a compatible battery purchased from HP.

IMPORTANT: Removing a battery that is the sole power source for the computer can cause loss of information. To prevent loss of information, save your work or shut down the computer through Windows before you remove the battery.

The computer can include either a 68 Wh battery or a 41 Wh battery. The 68 Wh battery uses a cable to connect to the system board. The 41 Wh battery connects directly to the system board.

Remove the 68 Wh battery:

1. Remove the five Phillips M2.0 × 4.0 screws **(1)** that secure the battery to the computer.
2. Disconnect the battery cable **(2)** from the system board.
3. Remove the battery **(3)** from the computer.

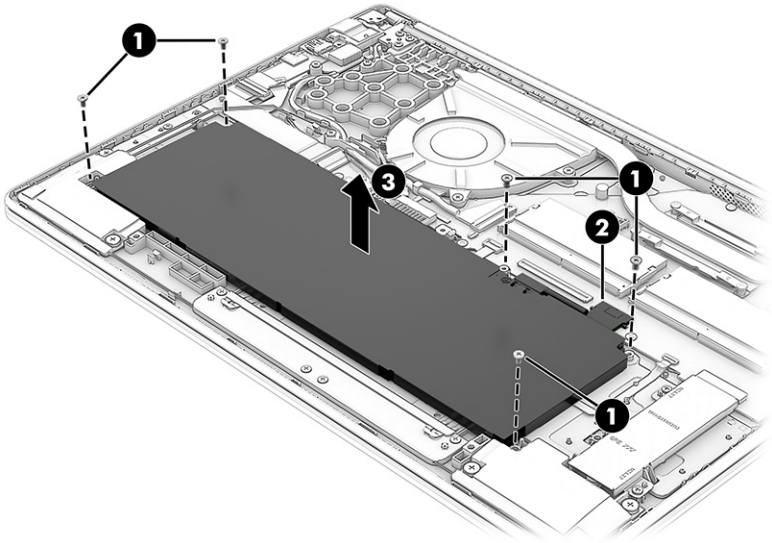

Remove the 41 Wh battery:

1. Remove the five Phillips M2.0 × 4.0 screws **(1)** that secure the battery to the computer.
2. Lift the bottom of the battery **(2)** up to approximately 25°.
3. Pull the battery **(3)** up and away from the computer to remove it.

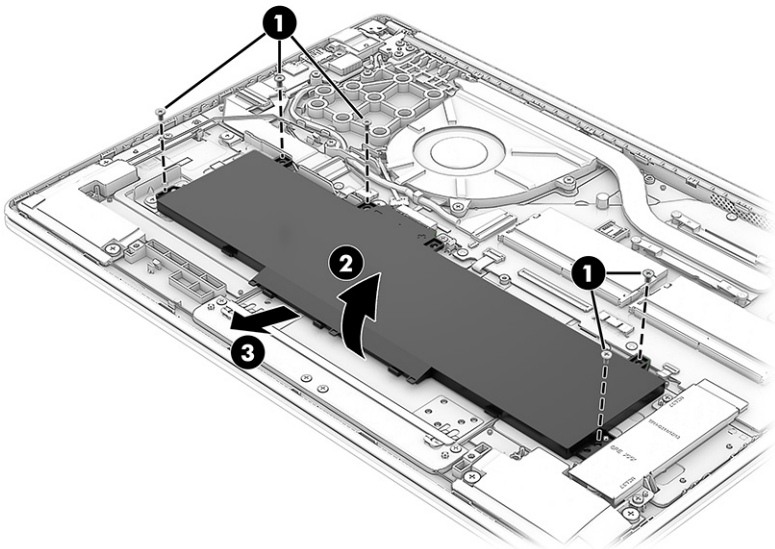

Reverse the removal procedures to reinstall the battery.

NOTE: When replacing the battery, be sure to completely reassemble the computer and plug in the AC adapter before turning the computer on.

Installing a new battery

Use these procedures and illustrations to install a battery. You must use a revive kit to remove the old battery and install a new one. The revive kit includes an empty containment tray and a containment tray with a battery preinstalled.

Table 5-2 Battery descriptions and part numbers

Description	Spare part number
4 cell, 68 Wh (includes revive kit)	P13980-001
3 cell, 41 Wh (includes revive kit)	N21969-001

Before starting this replacement procedure:

- Ensure other individuals are sufficiently clear of your workspace.
- Ensure your workspace is clear of any flammable material such as paper or oils.
- Locate the nearest ABC dry chemical fire extinguisher for use in an emergency.

⚠ **WARNING!** This procedure requires removing the battery or disconnecting the battery cable. Use care to avoid bending, twisting, or puncturing the battery regardless of its condition. Failure to follow this replacement guide or to use HP recommended tools might damage the system and/or cause a safety hazard.

- Do *not* remove the battery from the containment tray.
- Do *not* handle or touch the battery enclosure with sharp objects such as tweezers or pliers, which might puncture the battery.
- Do *not* touch the connectors with any metallic surface or object, such as metal tools, screws, or coins, which can cause shorting across the connectors.

Should a part become stuck or difficult to remove when opening a unit where a swollen battery is suspected, or if the battery becomes stuck in the unit, stop, and contact HP Support for assistance. Do not try to remove a battery by force.

NOTE: Screw locations, latch locations, and internal components might vary.

Before removing the battery, follow these steps:

1. Prepare the computer for disassembly (see Preparation for disassembly on page 34).
2. Remove the bottom cover (see Bottom cover on page 34).

⚠ **WARNING!** To reduce potential safety issues, use only the user-replaceable battery provided with the computer, a replacement battery provided by HP, or a compatible battery purchased from HP.

IMPORTANT: Removing a battery that is the sole power source for the computer can cause loss of information. To prevent loss of information, save your work or shut down the computer through Windows before you remove the battery.

1. Remove the battery using the revive kit:

a. Disconnect the battery cable from the system board. The connector location might vary.

NOTE: You can disconnect the cable from the battery. The battery spare part kit does not come with the battery cable, so be sure to use the old battery cable or order a new battery cable when replacing the battery.

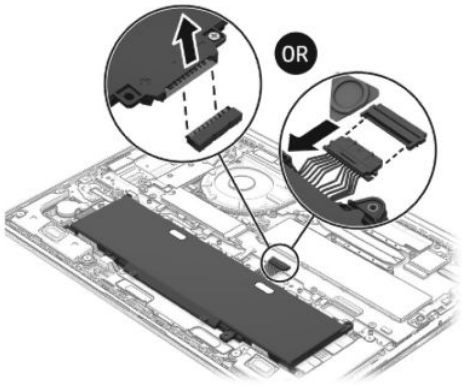

b. Open the empty battery containment tray.

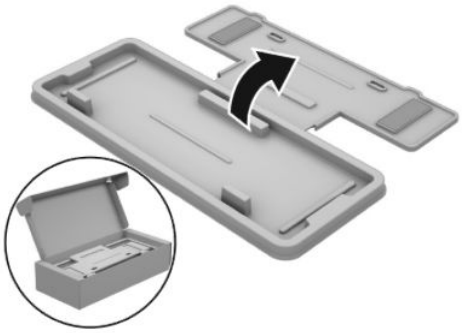

c. Remove the paper backing layer from the adhesive on the tray.

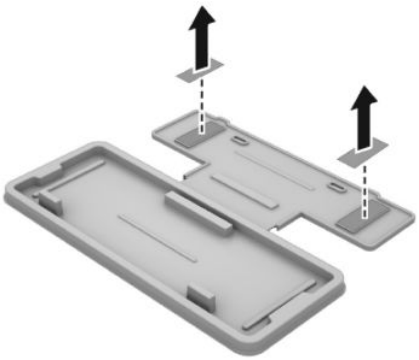

d. Turn the tray **(1)** over so that the adhesive is facing down.

e. Place the tray **(2)** centered on the battery.

f. Press down on the indentations on the tray **(3)** to adhere it to the battery.

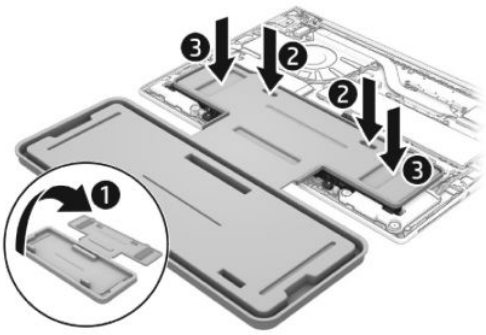

g. Remove the Phillips screws **(1)** that secure the battery to the computer. Number of screws and screw locations might vary.

h. Lift the top of the tray **(2)** to remove the battery from the computer.

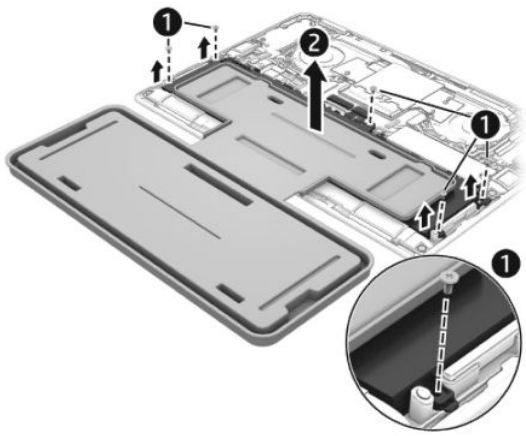

i. Rotate the battery up and over into the cavity of the containment tray.

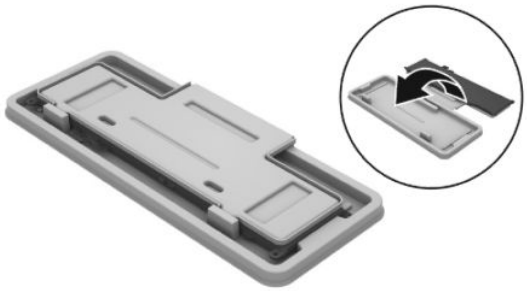

NOTE: Please recycle responsibly. For more information about recycling programs, see the HP website at http://www.hp.com/recycle.

2. Install the battery using the revive kit:

a. Open the containment tray that includes the new battery.

b. Turn the tray **(1)** over so the battery is facing downward, and then insert the battery **(2)** into the computer. Adhesive secures the battery to the tray.

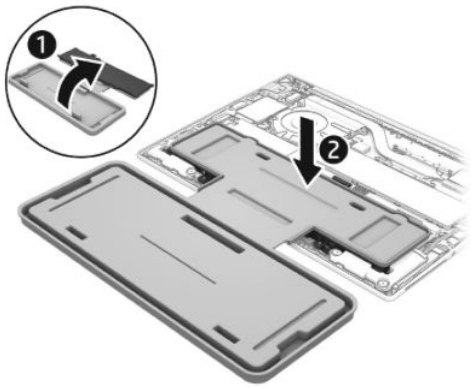

c. Install the Phillips screws **(1)** to secure the battery. Number of screws and screw locations might vary.

d. Lift the containment tray **(2)** off the battery.

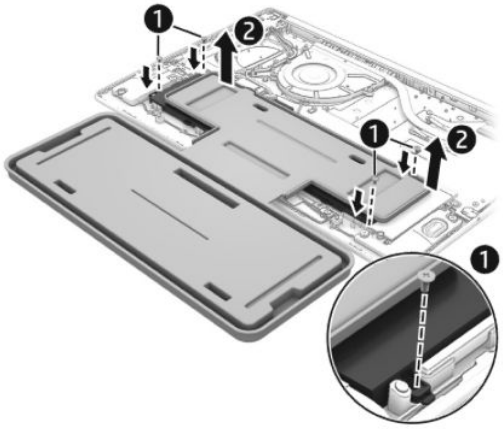

e. Connect the battery cable to the system board. The connector location might vary.

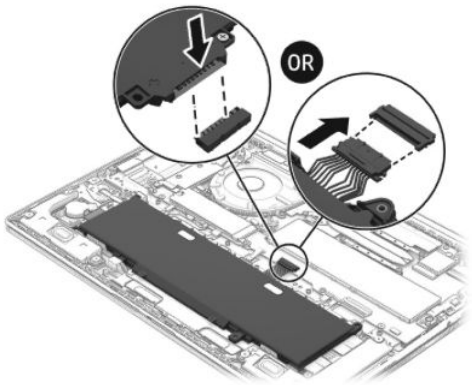

NOTE: When replacing the battery, be sure to completely reassemble the computer and plug in the AC adapter before turning the computer on.

6 Removal and replacement procedures for authorized service provider parts

This chapter provides removal and replacement procedures for authorized service provider parts.

IMPORTANT: Only an authorized service provider should access the components described in this chapter. Accessing these parts can damage the computer or void the warranty.

NOTE: Details about your computer, including model, serial number, product key, and length of warranty, are on the service tag at the bottom of your computer.

NOTE: The HP Support YouTube Channel (in English) has videos that provide step-by-step removal and replacement instructions for many common parts and models.

Component replacement procedures

Use the procedures described in this section to remove and replace computer components.

NOTE: HP continually improves and changes product parts. For complete and current information about supported parts for your computer, go to https://partsurfer.hp.com/, select your country or region, and then follow the on-screen instructions.

Make special note of each screw size and location during removal and replacement.

Solid-state drive

Use this procedure and illustration to remove the SSD.

Table 6-1 SSD descriptions and part numbers

Description	Spare part number
1 TB, Gen4	N77394-005
512 GB Gen4	N77392-005
256 GB Gen4	N77391-005
256 GB, Gen3	P90856-005

Before removing the SSD, follow these steps:

1. Prepare the computer for disassembly (see Preparation for disassembly on page 34).
2. Remove the bottom cover (see Bottom cover on page 34).
3. Depending on the battery size installed, either disconnect the battery cable from the system board or remove the battery from the computer (see Removing and reinstalling the same battery on page 38).

Remove the SSD:

1. Remove the two Phillips M2.0 × 3.0 screws **(1)** that secure the SSD cover.
2. Pull the cover **(2)** off the SSD.

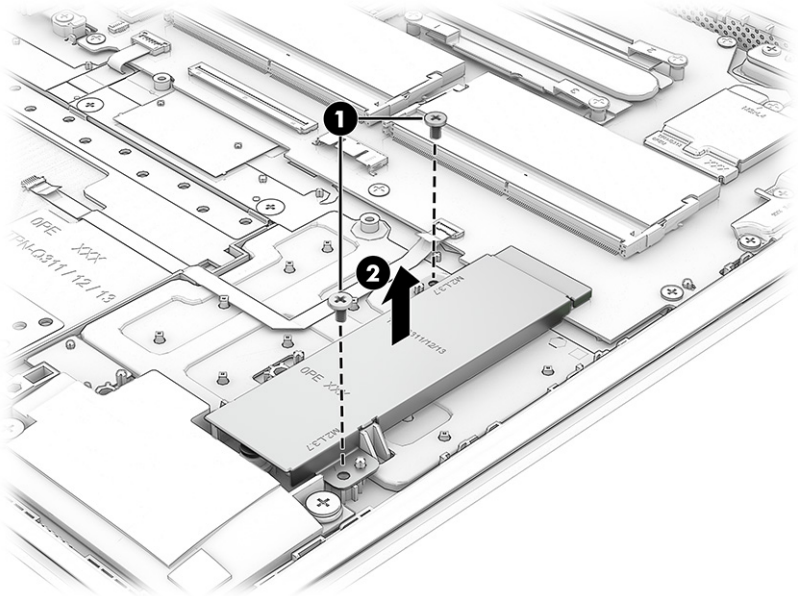

3. Remove the Phillips P2.0× 3.0 screw **(1)**, and then pull the SSD **(2)** out of the socket.

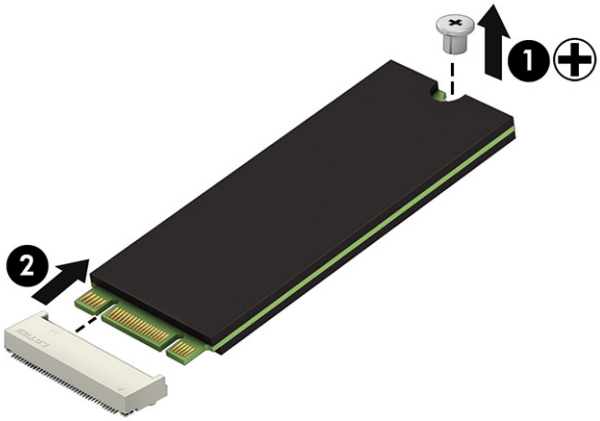

Reverse the removal procedures to install an SSD.

To protect the bottom of the SSD, be sure a protective strip **(1)** is installed under the SSD.

When installing an SSD, be sure a thermal pad **(2)** is installed on the bottom of the SSD cover.

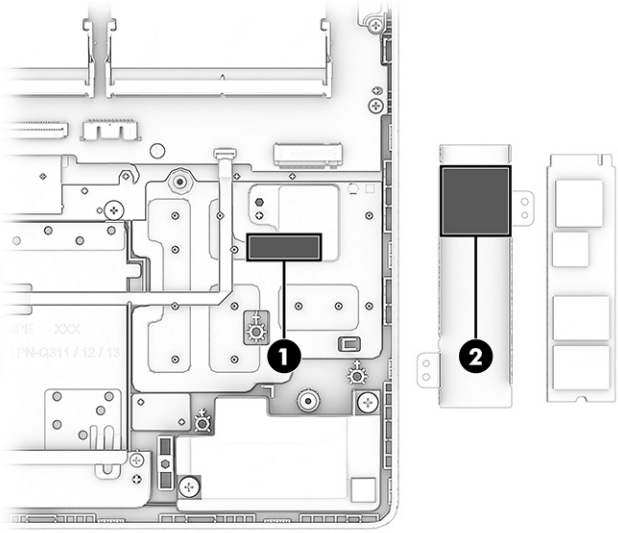

NOTE: SSDs are designed with a notch to prevent incorrect insertion.

WLAN module

Use this procedure and illustration to remove the WLAN module.

Table 6-2 WLAN module descriptions and part numbers

Description	Spare part number
WLAN module for use in models with an Intel processor	
Realtek Wi-Fi 6 RTL8852BE-VT + Bluetooth 5.4 (802.11ax 2 × 2)	P06350-005
Realtek Wi-Fi 7 RTL8922AE-VS + Bluetooth 6.0 (802.11be 2 × 2)	P44408-005
WLAN module for use in models with an AMD processor	
MediaTek MT7920 Wi-Fi 6 + Bluetooth 5.4 WW WLAN	P17386-005
Realtek Wi-Fi 7 RTL8922AE-VS + Bluetooth 6.0 (802.11be 2 × 2)	P44408-005

IMPORTANT: To prevent an unresponsive system, replace the wireless module only with a wireless module authorized for use in the computer by the governmental agency that regulates wireless devices in your country or region. If you replace the module and then receive a warning message, remove the module to restore device functionality, and then contact technical support.

Before removing the WLAN module, follow these steps:

1. Prepare the computer for disassembly (Preparation for disassembly on page 34).
2. Remove the bottom cover (see Bottom cover on page 34).
3. Depending on the battery size installed, either disconnect the battery cable from the system board or remove the battery from the computer (see Removing and reinstalling the same battery on page 38).

Remove the WLAN module:

1. Remove the antenna protector **(1)** from the module.
2. Disconnect the antenna cables **(2)** from the module terminals.
3. Remove the Phillips M2.0 × 3.0 screw **(3)** that secures the WLAN module.
4. Remove the module **(4)** by pulling it away from the slot at an angle.

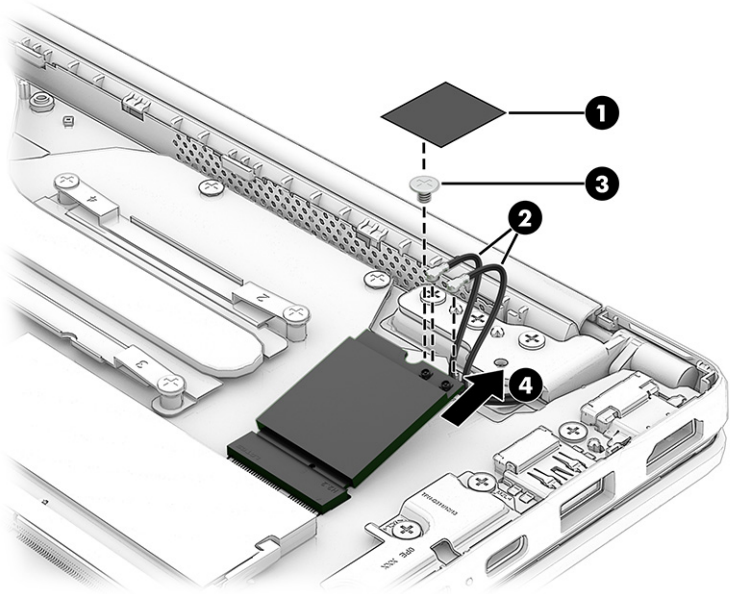

5. If the WLAN antenna is not connected to the terminal on the WLAN module, install a protective sleeve on the antenna connector, as shown in the following illustration.

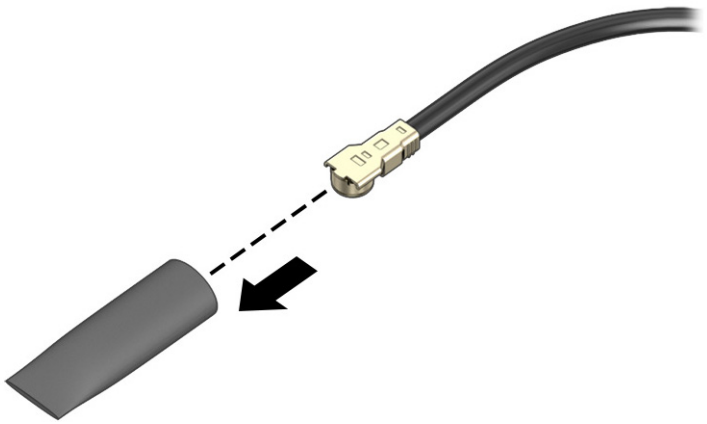

Reverse this procedure to install the WLAN module.

NOTE: WLAN modules are notched to prevent incorrect installation.

Memory modules (select products only)

Use this procedure and illustration to remove the memory modules.

Table 6-3 Memory module descriptions and part numbers

Description	Spare part number
32 GB, non-Micron (nM)	N77400-005
24 GB (nM)	P55196-005
16 GB (nM)	N77399-005
16 GB	N38627-005
8 GB (nM)	N77398-005
8 GB	N37792-005

Before removing the memory module, follow these steps:

1. Prepare the computer for disassembly (see Preparation for disassembly on page 34).
2. Remove the bottom cover (see Bottom cover on page 34).
3. Depending on the battery size installed, either disconnect the battery cable from the system board or remove the battery from the computer (see Removing and reinstalling the same battery on page 38).

If you are replacing a memory module, remove the existing memory module:

1. Lift (do not remove) the protective covering **(1)** so you can access the modules.
2. Spread the two retention clips outward **(2)** until the memory module tilts up at a 45° angle, and then remove the module **(3)**.

IMPORTANT: To prevent damage to the memory module, hold the memory module by the edges only. Do not touch the components on the memory module.

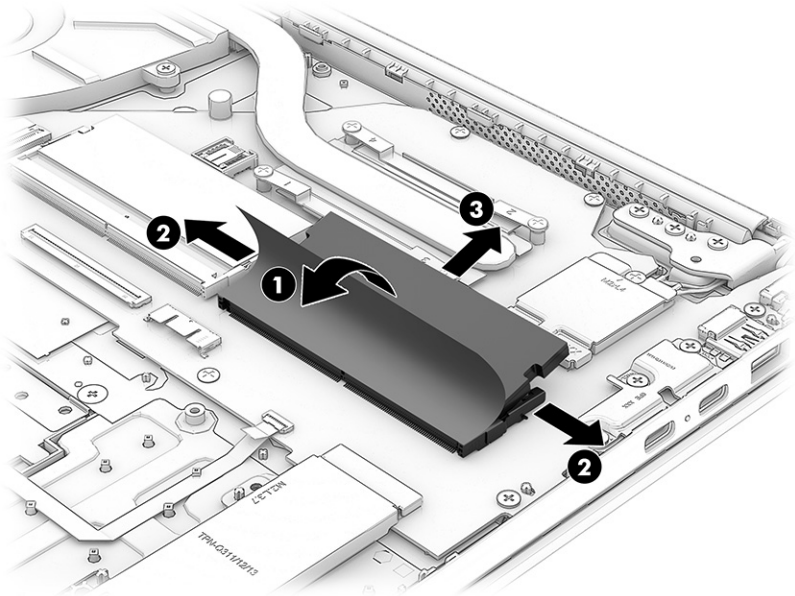

To protect a memory module after removal, place it in an electrostatic-safe container.

Reverse the removal procedures to install a memory module.

When installing a single memory module, insert the module into slot 1 as the primary module or slot 2 as the secondary module.

Speakers

Use this procedure and illustration to remove the speakers.

Table 6-4 Speaker description and part number

Description	Spare part number
Speakers (left and right)	P79621-001

Before removing the speakers, follow these steps:

1. Prepare the computer for disassembly (see Preparation for disassembly on page 34).
2. Remove the bottom cover (see Bottom cover on page 34).
3. Depending on the battery size installed, either disconnect the battery cable from the system board or remove the battery from the computer (see Removing and reinstalling the same battery on page 38).

Remove the speakers:

1. Disconnect the speaker cable **(1)** from the system board.
2. Disconnect the speaker cable from the clips and routing channel **(2)**.
3. Remove the speaker cable from the clips and tape **(3)** along the bottom of the computer.
4. Remove the four Phillips M1.6 × 2.5 screws **(4)** that secure the speakers.
5. Remove the speakers **(5)** from the computer.

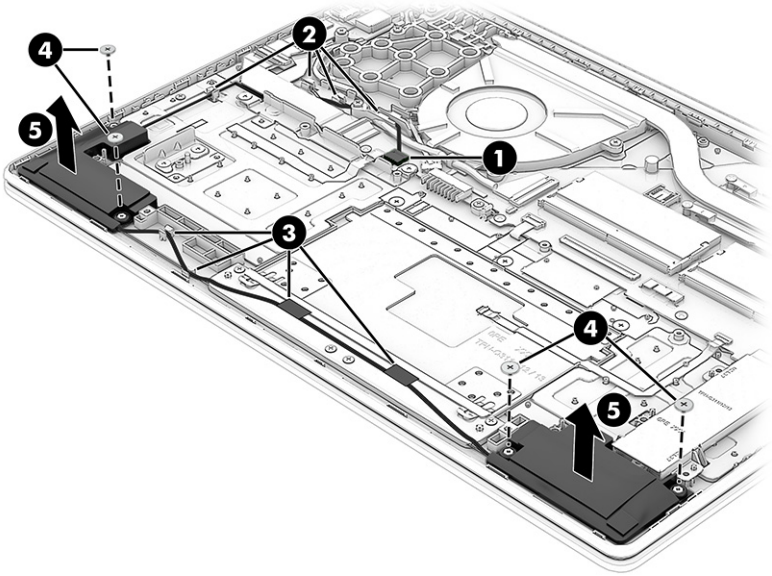

Reverse this procedure to install the speakers.

Fans

Use this procedure and illustration to remove the fans.

Table 6-5 Fan descriptions and part numbers

Description	Spare part number
45 W models	P79584-001
15 W models	P79583-001

Before removing the fans, follow these steps:

1. Prepare the computer for disassembly (see Preparation for disassembly on page 34).
2. Remove the bottom cover (see Bottom cover on page 34).
3. Depending on the battery size installed, either disconnect the battery cable from the system board or remove the battery from the computer (see Removing and reinstalling the same battery on page 38).

The computer can include either one fan in 15 W models or two fans in 45 W models. Single fan 15 W models also include a removable bracket next to the fan.

Remove the 15 W fan and bracket:

1. Remove the display cable from the clips **(1)** on the bottom of the fan housing.
2. Disconnect the fan cable **(2)** from the system board.
3. Remove the three Phillips M2.0 × 4.0 screws **(3)** from the fan.
4. Lift the fan **(4)** out of the computer.

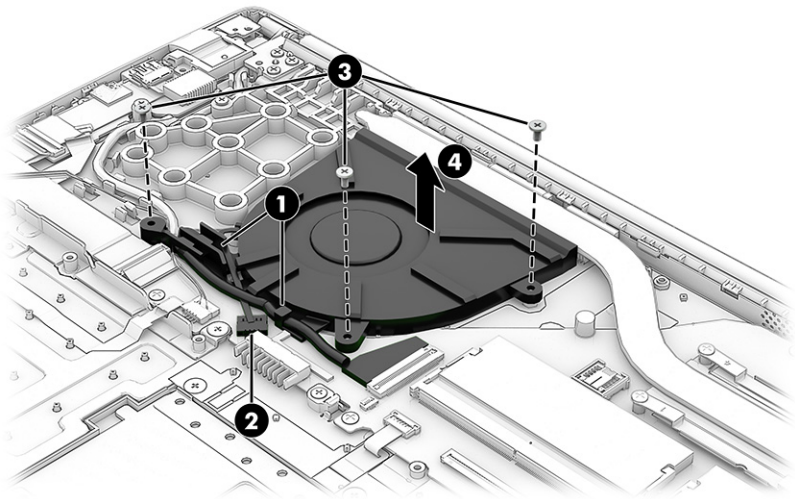

5. To remove the bracket from 15 W models:

NOTE: When replacing the top cover, be sure to remove this bracket from the old top cover and install it on the new top cover.

   a. Remove the speaker cable from the two clips **(1)** on the bottom of the bracket.

b. Remove the two Phillips M2.0 × 4.0 screws **(2)** from the bracket.

c. Lift the left side of the bracket **(3)** up, and then pull the bracket **(4)** left and out from under the left side of the heat sink.

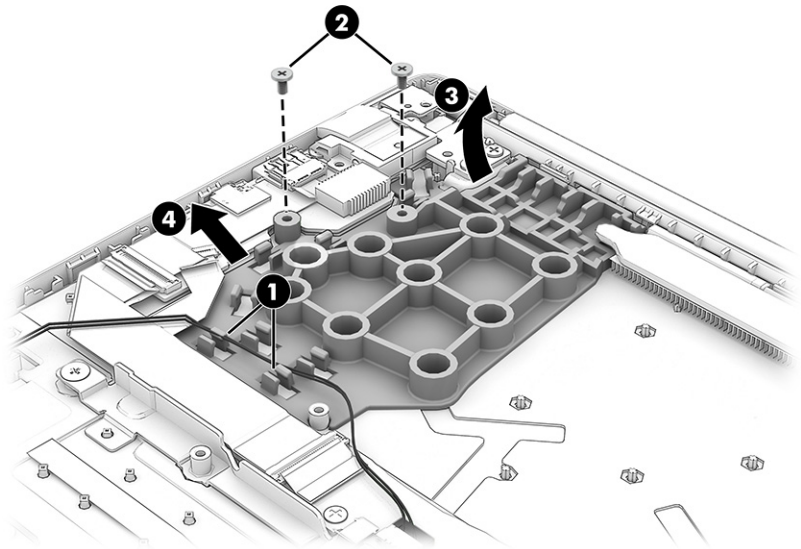

Remove the 45 W fans:

1. Remove the display cable and speaker cable from the clips **(1)** on the bottom of the fan housing.
2. Disconnect the fan cable **(2)** from the system board.
3. Remove the five Phillips M2.0 × 4.0 screws **(3)** from the fans.
4. Lift the fans **(4)** out of the computer.

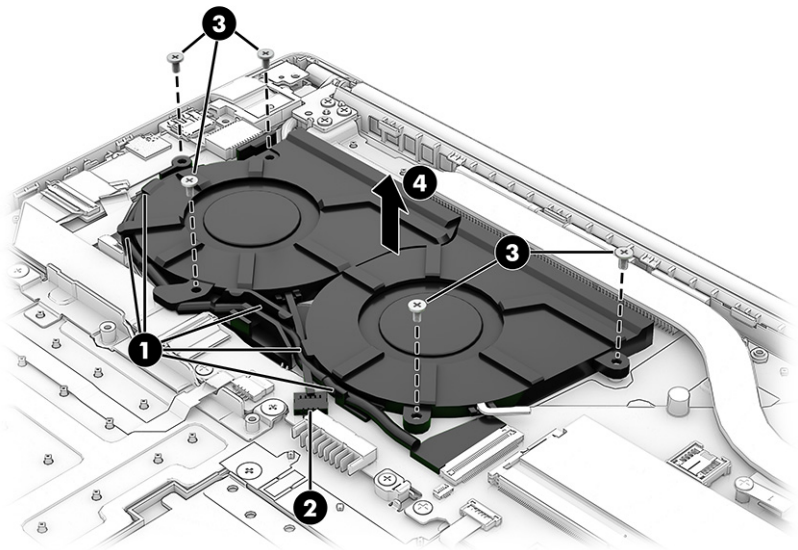

Reverse this procedure to install the fans.

NOTE: When replacing the top cover, be sure to transfer the plastic bracket from the old top cover to the new one.

I/O board

Use this procedure and illustration to remove the I/O board.

Table 6-6 I/O board description and part number

Description	Spare part number
I/O board (includes cable)	P81046-001

Before removing the I/O board, follow these steps:

1. Prepare the computer for disassembly (see Preparation for disassembly on page 34).
2. Remove the bottom cover (see Bottom cover on page 34).
3. Depending on the battery size installed, either disconnect the battery cable from the system board or remove the battery from the computer (see Removing and reinstalling the same battery on page 38).

Remove the I/O board:

1. Remove the protective strips **(1)** that cover the connectors on the I/O board.
2. Disconnect the I/O board cable ZIF connector **(2)** from the I/O board.
3. Disconnect the RJ-45 cable ZIF connector **(3)** from the I/O board.
4. Remove the two Phillips 2.5 × 4.0 screws **(4)** from the board.
5. Lift the inside of the board **(5)** up, and then pull the board **(6)** up and into the computer to remove it.

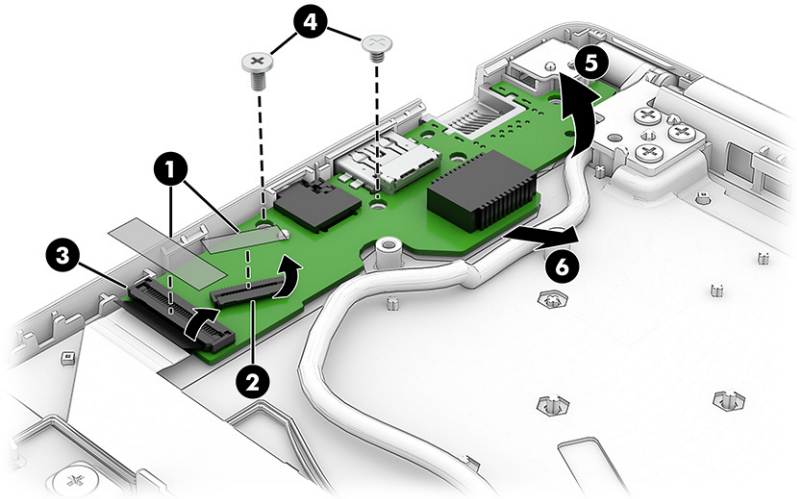

Reverse this procedure to install the I/O board.

Heat sink

Use these procedures and illustrations to remove the heat sink.

Table 6-7 Heat sink descriptions and part numbers

Description	Spare part number
Heat sink (15 W, Intel Core)	P79737-001
Heat sink (Intel N355 processor and AMD Ryzen 5 40/Ryzen 3 30 processors)	P79736-001
Heat sink (9 W models, Intel N150 processor)	P79735-001
Heat sink (15 W models, AMD processors)	P79581-001
Heat sink (15 W models, Ryzen 3 and Athlon processors)	P79396-001
Heat sink (Intel 350/330/320/315/304 processors)	Q03465-001
Heat sink (45 W models, Intel Core)	P79738-001
Heat sink (45 W models, AMD processors)	P79582-001
Heat sink (45 W models, 255H/225H processors)	Q03039-001

Before removing the heat sink, follow these steps:

1. Prepare the computer for disassembly (see Preparation for disassembly on page 34).
2. Remove the bottom cover (see Bottom cover on page 34).
3. Depending on the battery size installed, either disconnect the battery cable from the system board or remove the battery from the computer (see Removing and reinstalling the same battery on page 38).

Remove the heat sink from 15 W models:

1. In the order shown on the heat sink, remove the four Phillips screws **(1)** from the heat sink.
2. Remove the heat sink **(2)**.

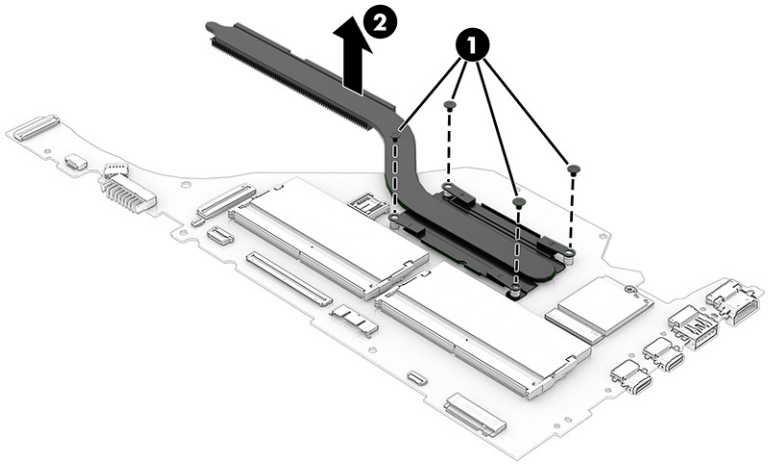

3. Thoroughly clean and replace the gray thermal paste on the heat sink each time it is removed.

Each time the heat sink is removed, thoroughly clean and replace the gray thermal grease from the surface of the heat sink and system board. Remember to reapply on the heat sink instead of the system board. Thoroughly clean the gray thermal grease from system boards that you plan to recycle, because the gray grease will no longer be in a sealed space.

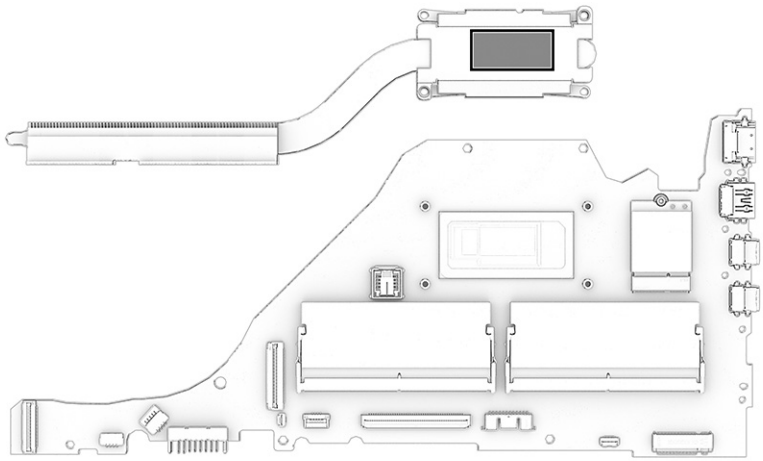

Remove the heat sink from 45 W models:

1. In the order shown on the heat sink, remove the four Phillips screws **(1)** from the heat sink.
2. Remove the heat sink **(2)**.

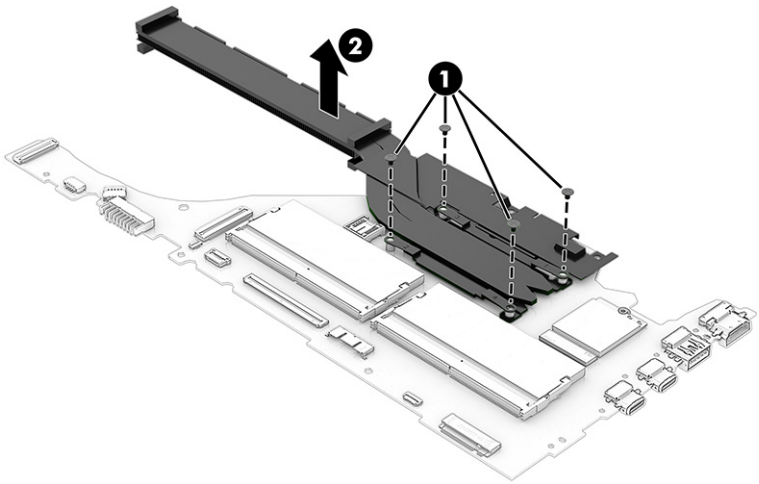

3. Thoroughly clean and replace the gray thermal paste **(1)** and confirm installation of the white thermal pad **(2)** and gray thermal pad **(3)** on the heat sink each time it is removed.

   Each time the heat sink is removed, thoroughly clean and replace the gray thermal grease from the surfaces of the heat sink and system board. Thoroughly clean the gray thermal grease from system boards that you plan to recycle, because the gray grease will no longer be in a sealed space.

   Heat sink locations

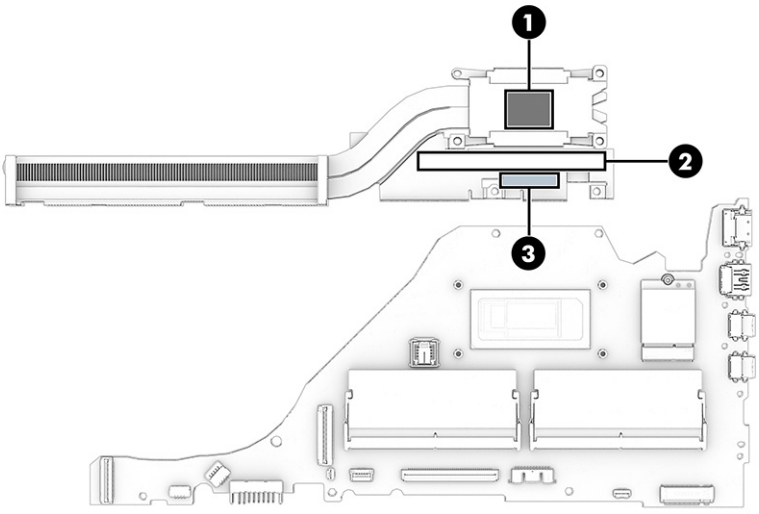

Intel models system board thermal grease location

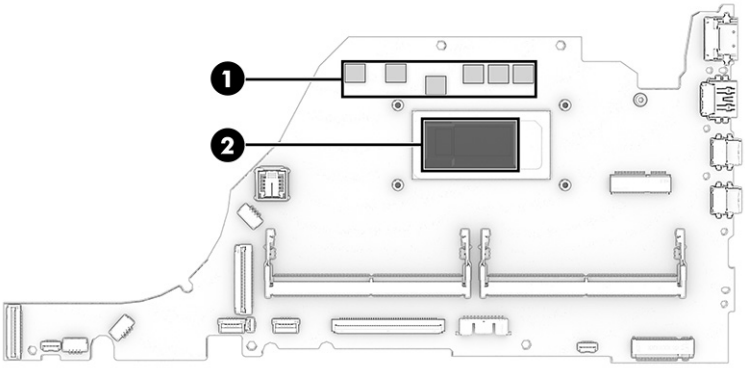

AMD models system board thermal grease location

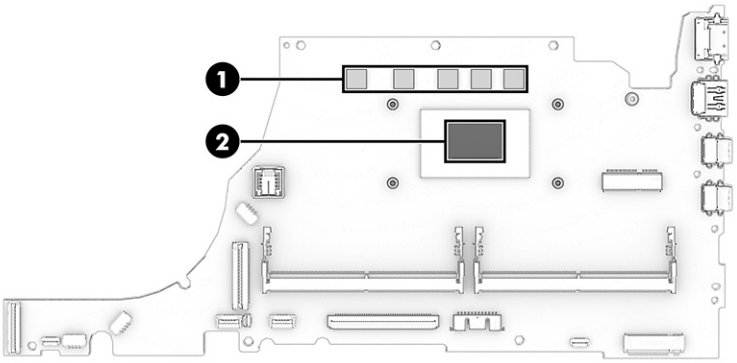

Reverse this procedure to install the heat sink.

System board

Use these procedures and illustrations to remove the system board.

Table 6-8 System board descriptions and part numbers

Description	Spare part number
System board for use in HP 200 G2i 16 inch Notebook PC models with an Intel processor	
Intel Core 7 240H processor	P81019-601
Intel Core 5 220H processor	P81020-601
Intel Core 5 220U processor	P81021-601
Intel Core 5 220U processor (models with an OLED panel)	P99148-601
Intel Core 7 150U processor	P81022-601
Intel Core 7 150U processor (models with an OLED panel)	P99149-601
Intel Core 5 120U processor	P81023-601
Intel Core 5 120U processor (models with an OLED panel)	P99150-601
Intel Core 3 100U processor	P81024-601
Intel Core 3 100U processor (models with an OLED panel)	P99151-601
Intel Core 3 N355 processor with 16 GB system memory	Q09448-601
Intel Core 3 N355 processor with 8 GB system memory	P81025-601
Intel Core 3 N355 processor with 8 GB system memory and 128 GB UFS storage	P81028-601
Intel N250 processor with 8 GB system memory	P81026-601
Intel N150 processor with 8 GB system memory	P81027-601
Intel N150 processor with 8 GB system memory and 128 GB UFS storage	P81029-601
System board for use in HP 200 G2Ri 16 inch Notebook PC models with an Intel processor	
Intel Ultra 7 255H processor	Q03464-601
Intel Ultra 5 225H processor	Q03463-601
Intel Ultra 7 255U processor	Q03455-601
Intel Ultra 7 255U processor (OLED models)	Q03462-601
Intel Ultra 7 255U processor and 32 GB system memory	Q16625-601
Intel Ultra 7 255U processor and 32 GB system memory (PRC)	Q16626-601
Intel Ultra 7 255U processor and 16 GB system memory	Q16623-601
Intel Ultra 7 255U processor and 16 GB system memory (PRC)	Q16624-601
Intel Ultra 5 235U processor	Q03454-601
Intel Ultra 5 235U processor (OLED models)	Q03461-601
Intel Ultra 5 225U processor	Q03453-601
Intel Ultra 5 225U processor (OLED models)	Q03460-601
Intel Ultra 5 225U processor and 32 GB system memory	Q16619-601
Intel Ultra 5 225U processor and 32 GB system memory (PRC)	Q16620-601
Intel Ultra 5 225U processor and 16 GB system memory	Q16617-601
Intel Ultra 5 225U processor and 16 GB system memory (PRC)	Q16618-601

Table 6-8 System board descriptions and part numbers (continued)

Description	Spare part number
Intel Ultra 5 225U processor and 8 GB system memory	Q16621-601
Intel Ultra 5 225U processor and 8 GB system memory (PRC)	Q16622-601
Intel Core 7 350 processor	Q03452-601
Intel Core 7 350 processor (OLED models)	Q03459-601
Intel Core 7 350 processor and 16 GB system memory	Q16613-601
Intel Core 7 350 processor and 16 GB system memory (PRC)	Q16614-601
Intel Core 7 350 processor and 8 GB system memory	Q16615-601
Intel Core 7 350 processor and 8 GB system memory (PRC)	Q16616-601
Intel Core 5 330 processor	Q03451-601
Intel Core 5 330 processor (OLED models)	Q03458-601
Intel Core 5 320 processor	Q03450-601
Intel Core 5 320 processor (OLED models)	Q03457-601
Intel Core 5 320 processor and 16 GB system memory	Q16609-601
Intel Core 5 320 processor and 16 GB system memory (PRC)	Q16610-601
Intel Core 5 320 processor and 8 GB system memory	Q16611-601
Intel Core 5 320 processor and 8 GB system memory (PRC)	Q16612-601
Intel Core 5 315 processor	Q03449-601
Intel Core 5 315 processor (OLED models)	Q03456-601
Intel Core 3 304 processor	Q25541-601
Intel Core 3 304 processor (OLED models)	Q25542-601
System board for use in models with an AMD processor	
AMD Ryzen 7 H 255 processor	P84780-601
AMD Ryzen 7 250 processor	P84777-601
AMD Ryzen 7 250 processor (models with an OLED panel)	P99496-601
AMD Ryzen 5 220 processor	P84778-601
AMD Ryzen 5 220 processor (models with an OLED panel)	P99497-601
AMD Ryzen 3 210 processor	P84779-601
AMD Ryzen 3 210 processor (models with an OLED panel)	P99498-601
AMD Ryzen 5 40 processor and 8 GB system memory	P84781-601
AMD Ryzen 5 40 processor and 16 GB system memory (PRC)	Q08110-601
AMD Ryzen 5 40 processor and 8 GB system memory (PRC)	Q08111-601
AMD Ryzen 3 30 processor and 8 GB system memory	P84782-601
AMD Gold 20 processor and 8 GB system memory	P84783-601
AMD Silver 10 processor and 8 GB system memory	P84784-601

Before removing the system board, follow these steps:

1. Prepare the computer for disassembly (see Preparation for disassembly on page 34).
2. Remove the bottom cover (see Bottom cover on page 34).
3. Depending on the battery size installed, either disconnect the battery cable from the system board or remove the battery from the computer (see Removing and reinstalling the same battery on page 38).
4. Remove the SSD (see Solid-state drive on page 45).
5. Remove the WLAN module (see WLAN module on page 47).
6. Remove the memory modules (see Memory modules (select products only) on page 48).
7. Remove the heat sink (see Heat sink on page 54).
8. Remove the fans (see Fans on page 51).

Remove the system board:

1. Remove the plastic adhesive covers from the following system board connectors:
   - **(1)**: RJ-45 connector on the I/O board
   - **(2)**: I/O board connector on the I/O board
   - **(3)**: I/O board connector on the system board
   - **(4)**: Display, backlight, keyboard, and OLED (select products only) connectors
   - **(5)**: Touchpad connector

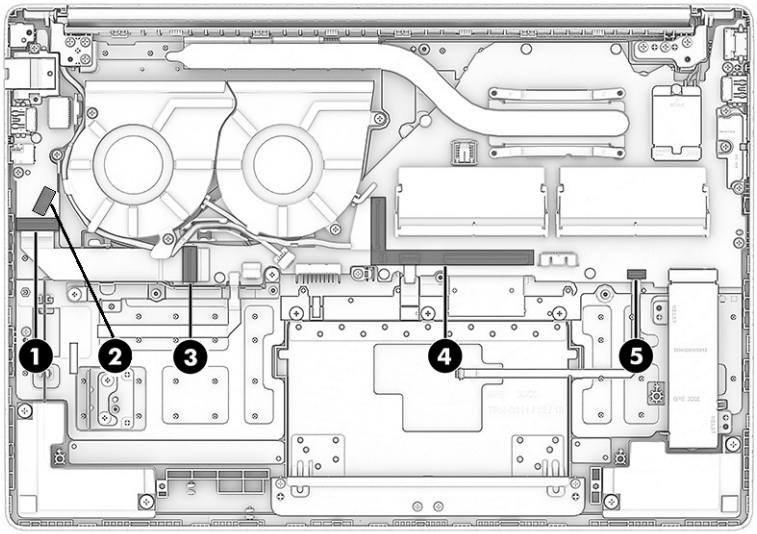

2. Disconnect the following cables from the system board:
   - Antenna cables from the WLAN module **(1)**
   - Touchpad cable (ZIF) **(2)**

- Keyboard cable (ZIF) **(3)**
- Keyboard backlight cable (ZIF) **(4)**
- OLED cable **(5)** (select products only)
- Speaker cable **(6)**
- I/O board cable (ZIF) **(7)**
- Display cable **(8)**

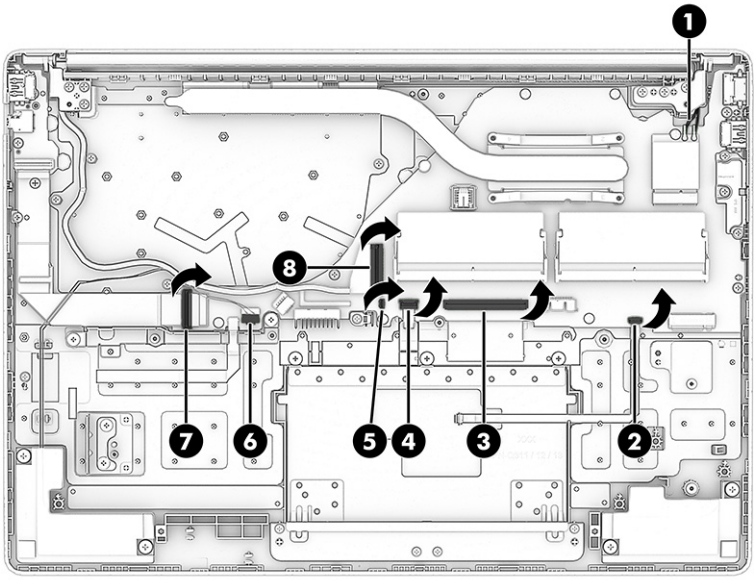

3. Remove the five Phillips M2.0 × 2.3 screws **(1)** from the system board.
4. Remove the five Phillips M2.0 × 4.0 screws **(2)** from the system board.
5. Remove the USB bracket **(3)** from the system board.

6. Lift the left side of the board and pull the board **(4)** to the left and up to remove it from computer.

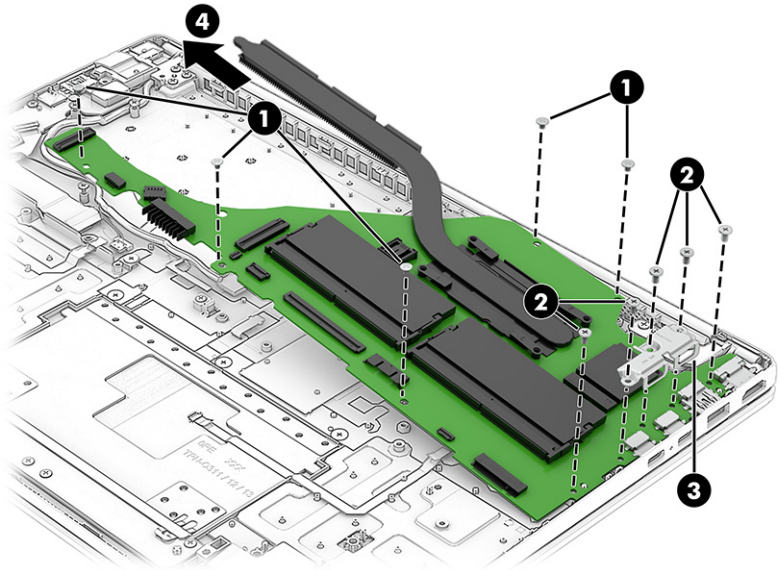

Reverse this procedure to install a system board.

Touchpad

Use this procedure and illustration to remove the touchpad.

Table 6-9 Touchpad descriptions and part numbers

Description	Spare part number
Meteor silver	P81048-001
Iron gray	P81049-001

Before removing the touchpad, follow these steps:

1. Prepare the computer for disassembly (see Preparation for disassembly on page 34).
2. Remove the bottom cover (see Bottom cover on page 34).
3. Remove the battery (see Removing and reinstalling the same battery on page 38).

Remove the touchpad:

1. Remove the speaker cable **(1)** from the bracket.
2. Remove the four Phillips M2.0 × 3.0 screws **(2)** from the touchpad bracket.

3. Remove the bracket **(3)** from the computer.

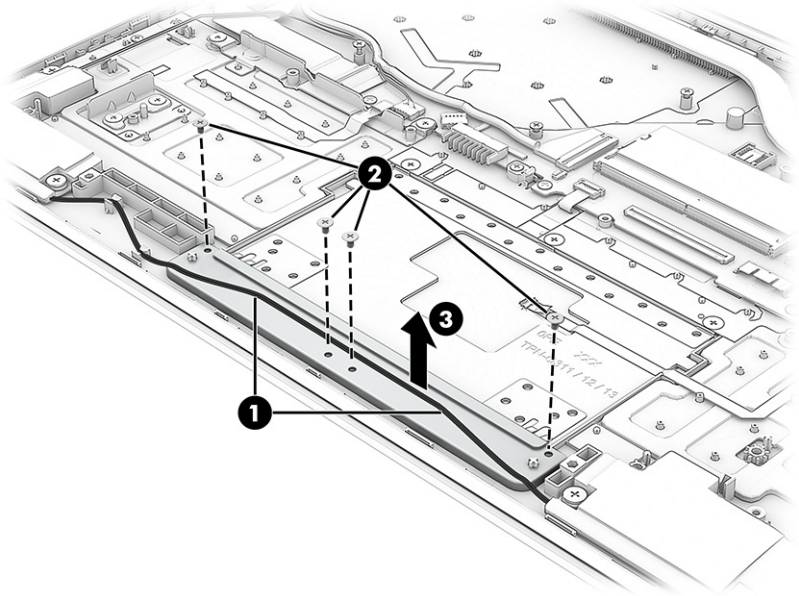

4. Lift (do not remove) the clear plastic **(1)** off the touchpad far enough to access the connector underneath.
5. Disconnect the cable from the ZIF connector **(2)** on the touchpad.
6. Lift (do not remove) the black plastic **(3)** off the top of the touchpad far enough to access the screws underneath.
7. Remove the three Phillips M2.0 × 2.0 screws **(4)** from the touchpad.
8. Remove the touchpad **(5)** from the computer.

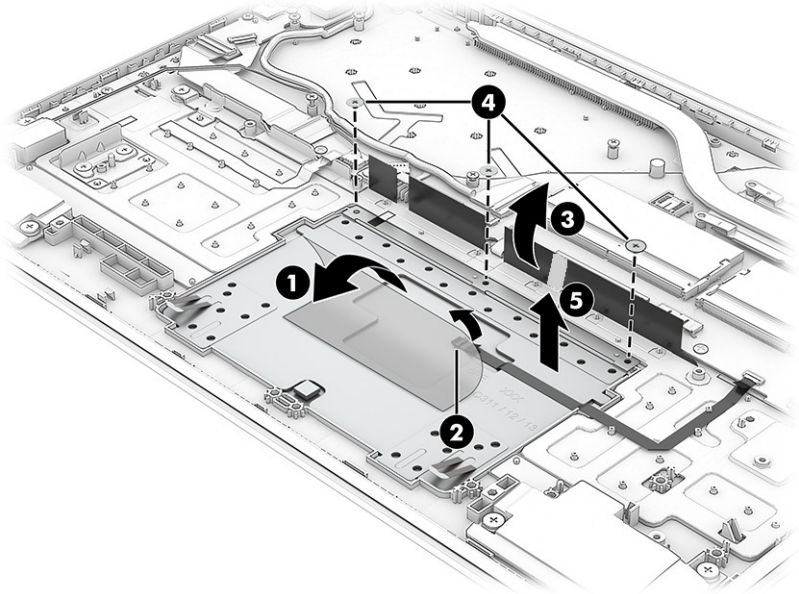

Reverse the removal procedures to install the touchpad.

Display assembly

Use these procedures and illustrations to remove and disassemble the display assembly.

NOTE: The display assembly is only available as spare parts at the subcomponent level. For display assembly spare part information, see Display assembly subcomponents on page 21.

Before removing the display panel, follow these steps:

1. Prepare the computer for disassembly (see Preparation for disassembly on page 34).
2. Remove the bottom cover (see Bottom cover on page 34).
3. Depending on the battery size installed, either disconnect the battery cable from the system board or remove the battery from the computer (see Removing and reinstalling the same battery on page 38).

Remove the display assembly:

1. Remove the plastic antenna protector **(1)** from the WLAN module.
2. Disconnect the antenna cables **(2)** from the WLAN module.
3. Lift the protective tape **(3)** off the display connector.
4. Disconnect the display cable from the system board ZIF connector **(4)**.
5. Remove the display cable from the clips **(5)** around the fan and up to the hinge.

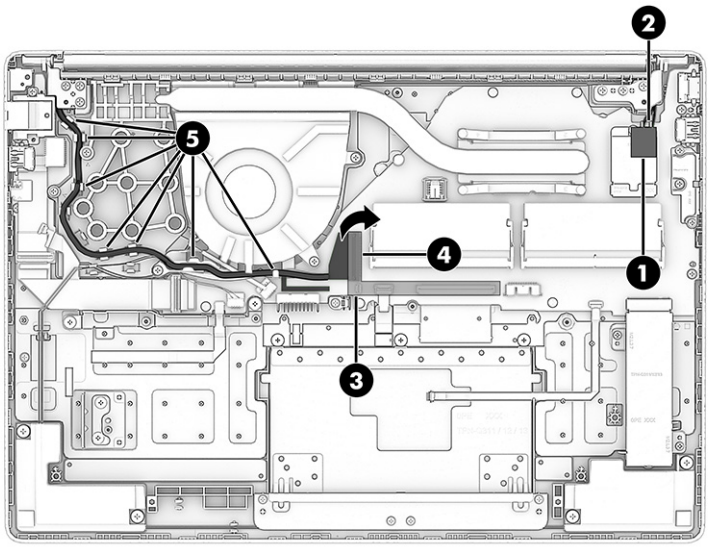

6. Open the display **(1)** and place the computer **(2)** keyboard side down with the display hanging down off the side of a table.

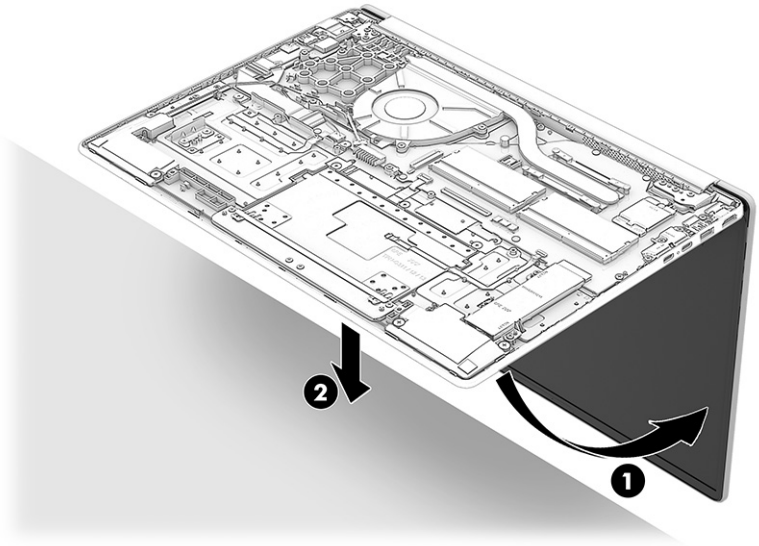

7. Remove the six Phillips M2.5 × 5.0 screws **(1)** that secure the display assembly to the computer.
8. Separate the display **(2)** from the computer.

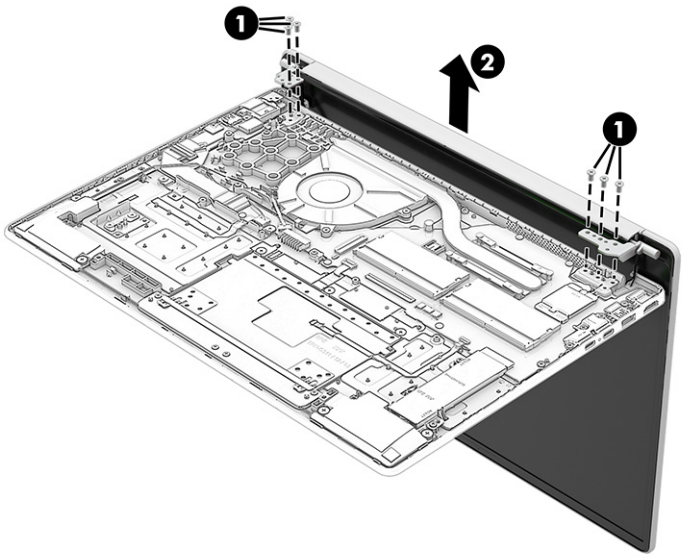

9. To remove the display bezel:
   a. Release the bezel from the top **(1)** and left and right sides **(2)** of the display.
   b. Insert a tool into the seam on the bottom of the bezel, and then pull the tool **(3)** along the length of the bezel to release it.

c. Remove the bezel **(4)**.

IMPORTANT: To avoid damage to the panel, do not use a tool on the inside of the bezel. You can use a tool only when you insert it from the outside of the top, left, and right sides of the bezel. Use your fingers to lift up on the bezel. Avoid pressing down on the panel during removal.

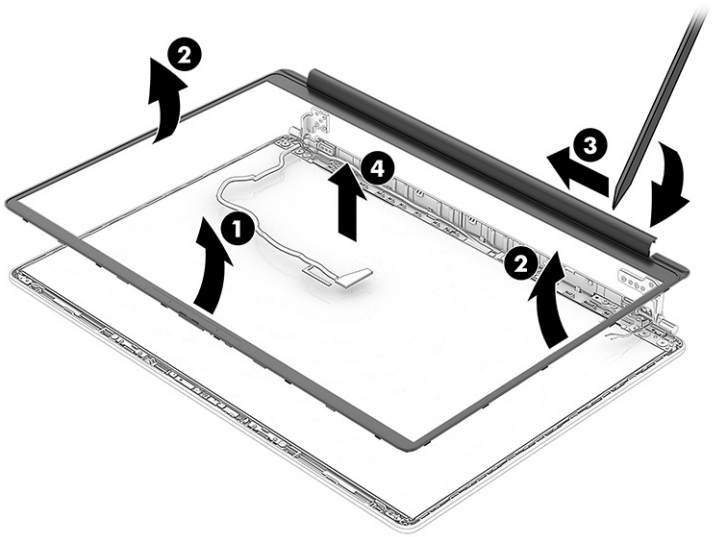

10. To remove the OLED board (select products only):

    a. Peel the protective tape **(1)** off the board.

    b. Disconnect the cable from the ZIF connector **(2)** on the board.

    c. Use a tool **(3)** to release the board from the display.

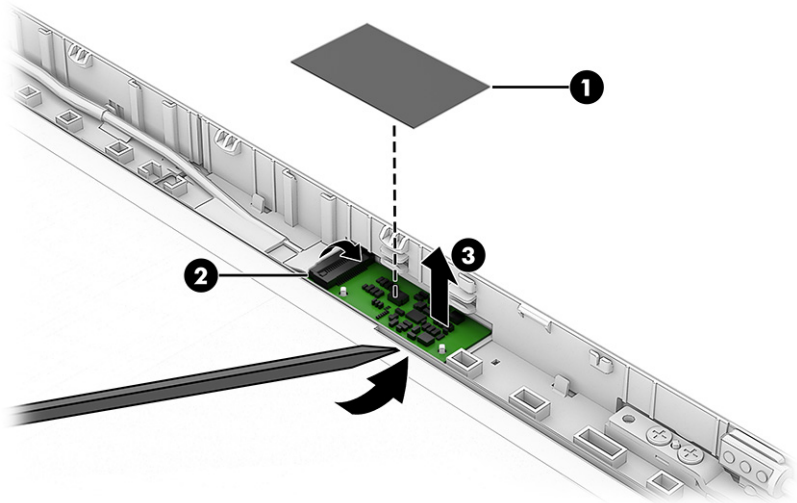

11. To remove the display panel:

    a. Use tweezers to grasp the stretchable adhesive tape **(1)** on the left and right sides of the panel.

b. Pull the tape **(2)** out from behind the panel.

NOTE: Slowly pull the tape so you are careful not to break it.

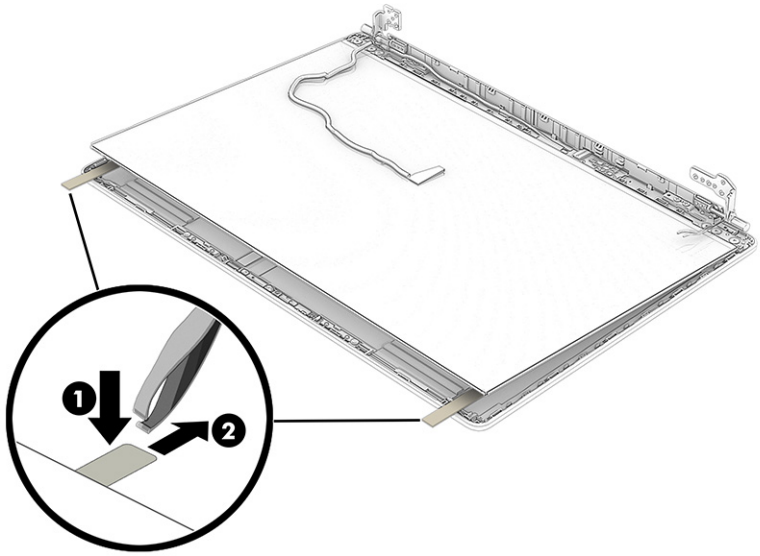

c. Lift the panel off the display rear cover.

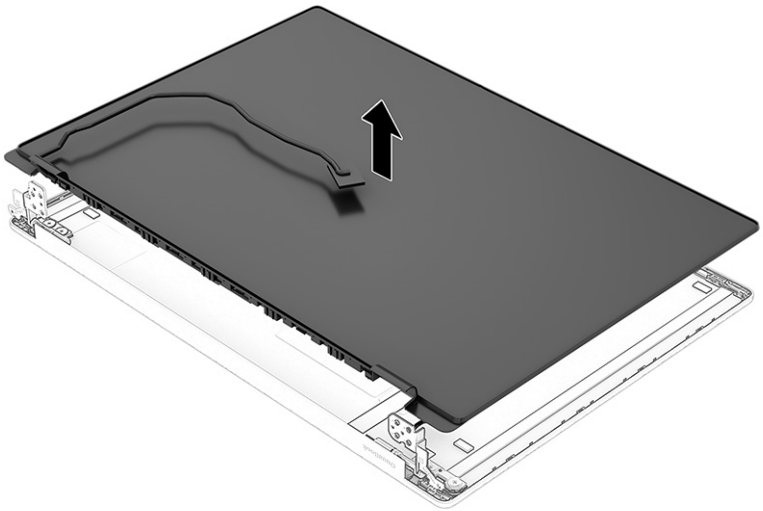

d. When installing a display panel, use the following illustration to determine tape installation locations on the inside of the display rear cover.

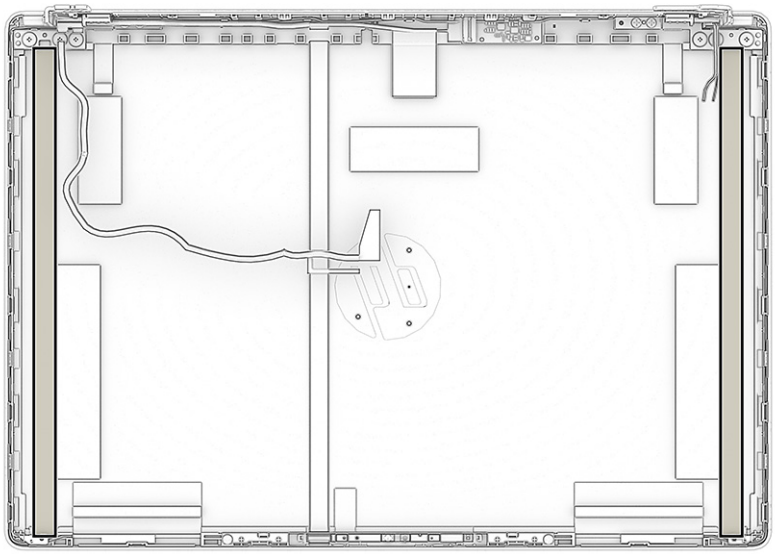

12. To remove the display cable:

a. Peel the conductive tape **(1)** off the connector on the bottom of the panel.

b. Open the locking bar **(2)**, and then disconnect the cable **(3)** from the panel.

c. (Select products only) Disconnect the smaller cable **(4)** from the ZIF connector on the display daughterboard.

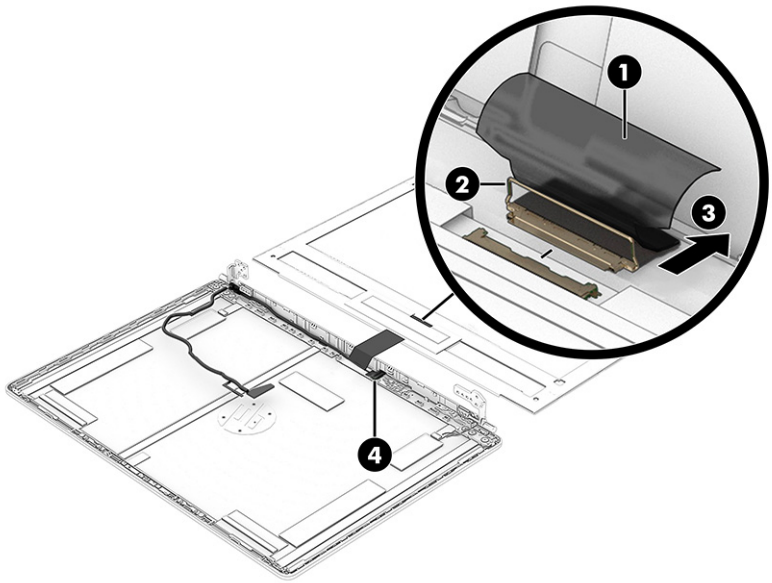

13. To remove the camera module:

a. (OLED models) Remove the panel bracket by removing the two Phillips 2.0 × 2.5 screws **(1)**, and then using a tool **(2)** to release the panel bracket from the display rear cover.

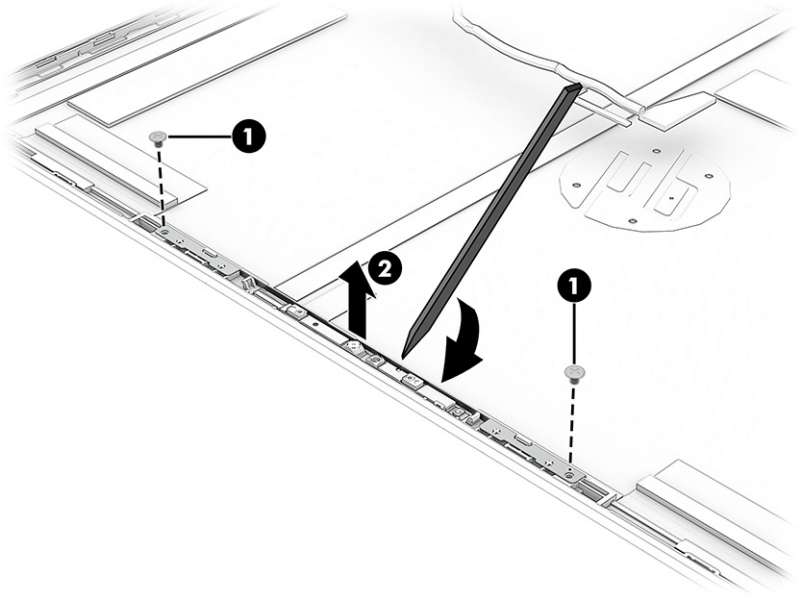

b. (non-OLED models) Remove the panel bracket by removing the four Phillips 2.0 × 2.5 screws **(1)**, and then removing the panel bracket **(2)** from the display rear cover.

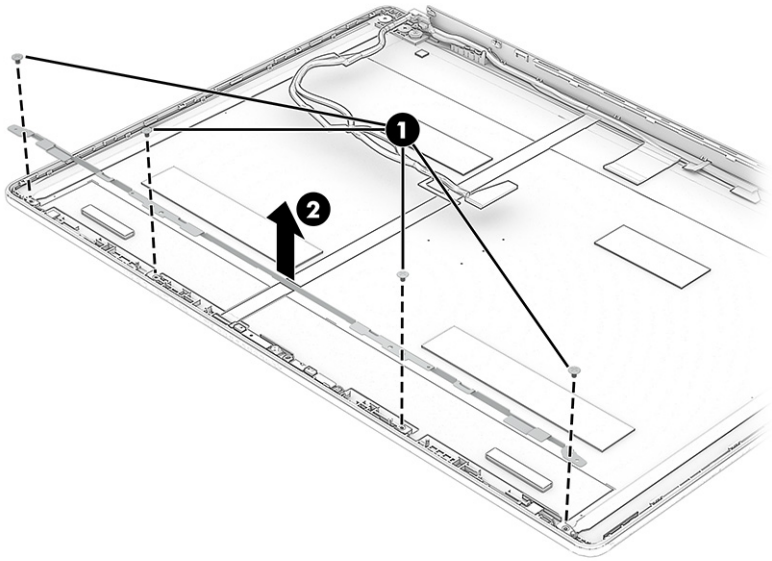

c. Insert a pry tool **(1)** under the end of the camera module, and then pull the tool across the length of the module **(2)** to release it.

d. Disconnect the cable from the reverse ZIF connector **(3)** on the camera module.

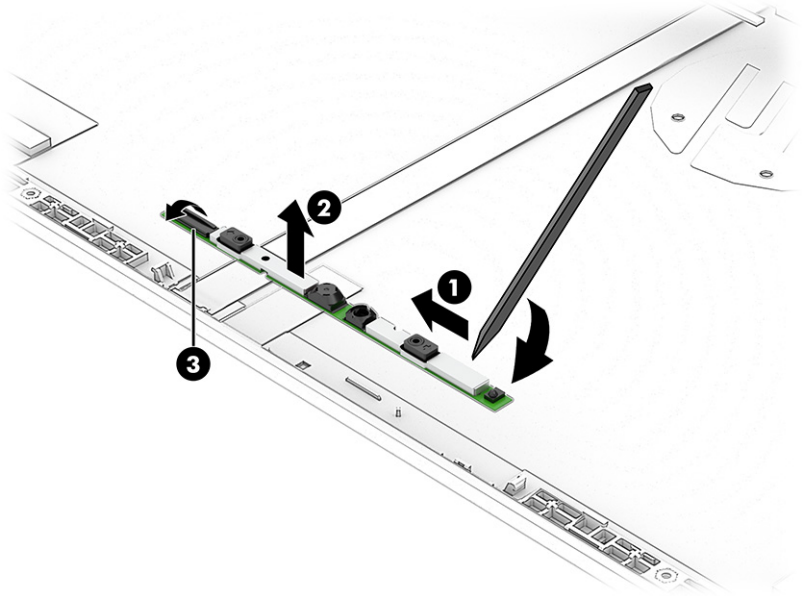

14. To remove the hinges from the display rear cover:

    a. Remove the three Phillips M2.0 × 2.0 screws **(1)** from each hinge.

    b. Remove the two Phillips M2.0 × 4.0 screws **(2)** from each hinge.

    c. Remove the hinges **(3)** from the display back cover.

    OLED models

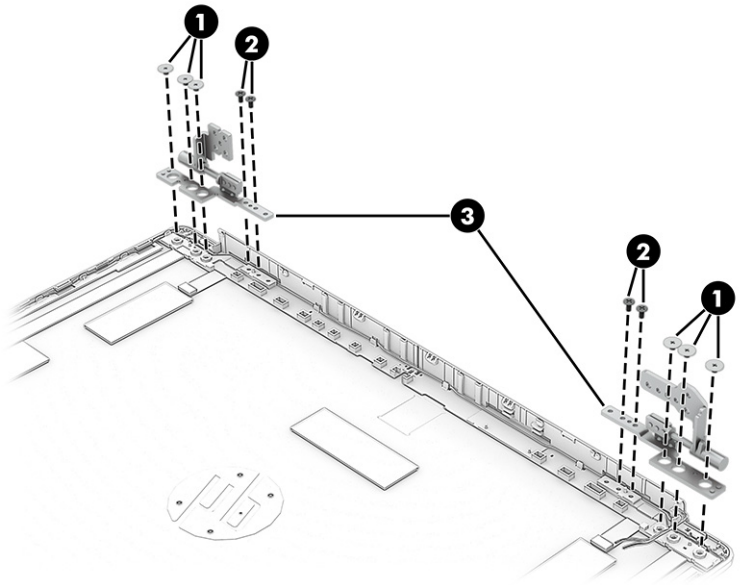

    non-OLED models

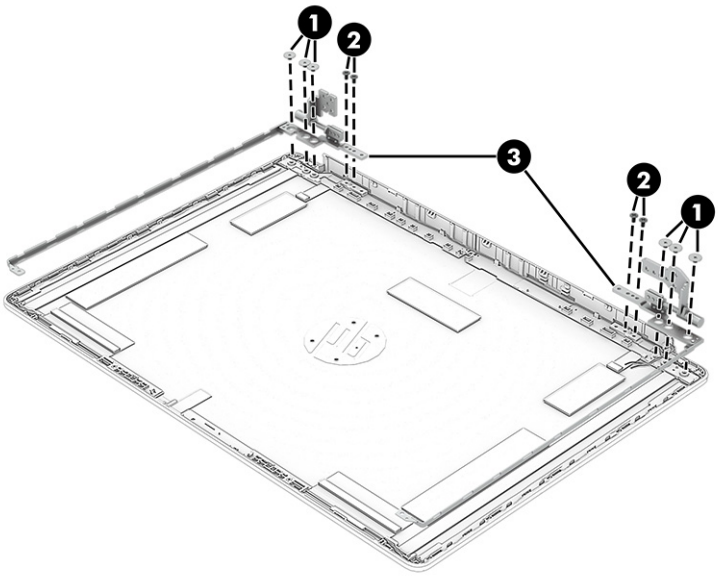

15. To remove the camera cable from OLED models:

    a. Peel the cable **(1)** off the inside of the display rear cover.

    b. Remove the cable from the clips **(2)** along the bottom of the display enclosure.

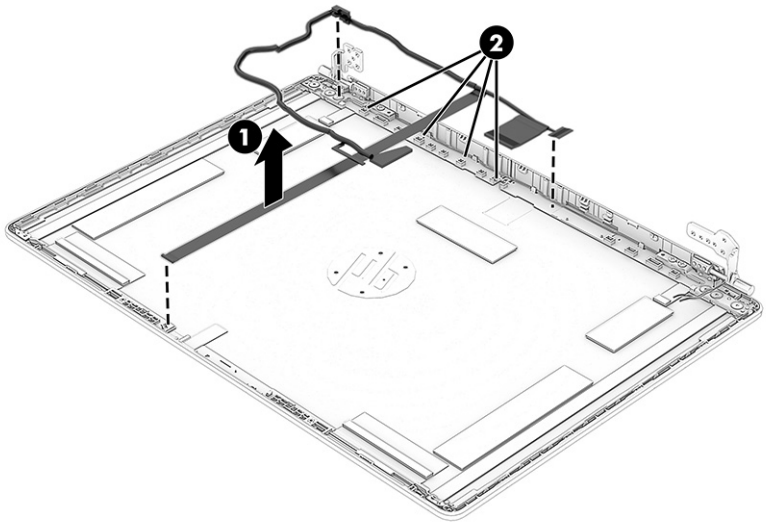

16. To remove the wireless antennas and cables from OLED models:

    a. Remove the antenna cables from the clips **(1)** along the sides of the display rear cover.

    b. Peel the antennas **(2)** off the display rear cover.

    OLED models

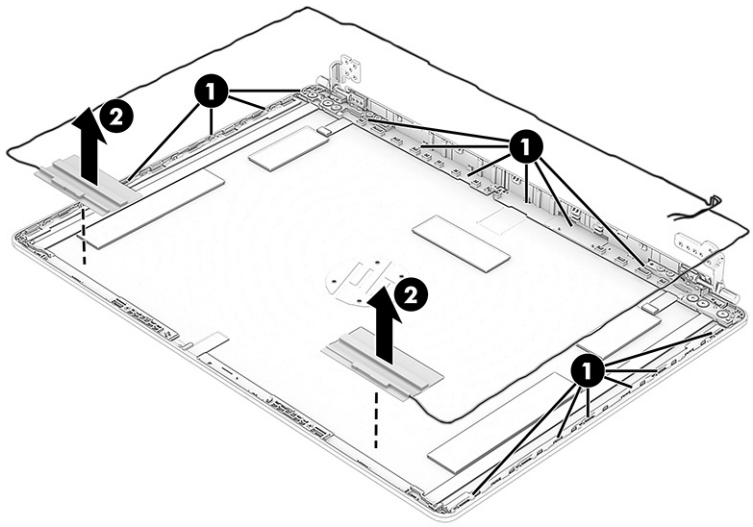

non-OLED models

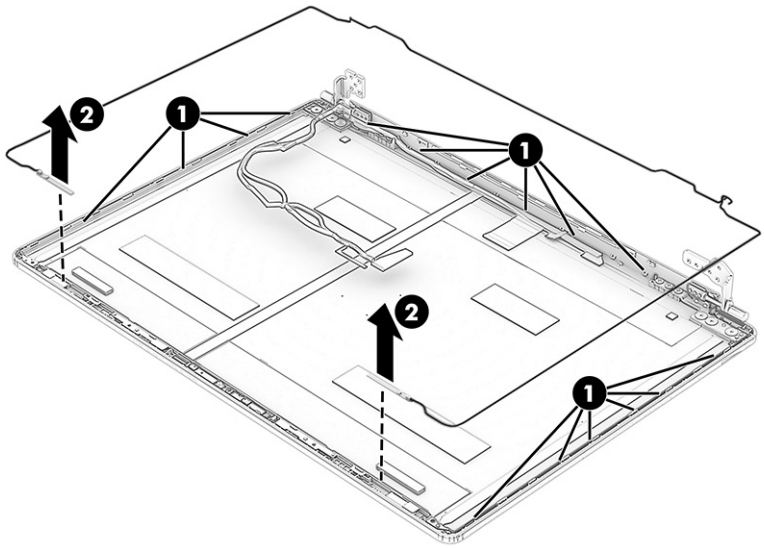

Reverse these procedures to reassemble and replace the display assembly.

Top cover with keyboard

The top cover remains after removing all other spare parts from the computer. The first table includes the top cover spare part numbers. The second table includes keyboard country codes.

Table 6-10 Top cover with keyboard descriptions and part numbers

Description	Spare part number
Meteor silver top cover, iron gray keyboard and clickpad, backlit keyboard with fingerprint reader	P81033-xx1
Meteor silver top cover, iron gray keyboard and clickpad, backlit keyboard without fingerprint reader	P81034-xx1

Table 6-10 Top cover with keyboard descriptions and part numbers (continued)

Description	Spare part number
Meteor silver top cover, dark meteor silver keyboard and clickpad, backlit keyboard with fingerprint reader	P81035-xx1
Meteor silver top cover, dark meteor silver keyboard and clickpad, backlit keyboard without fingerprint reader	P81036-xx1
Iron gray top cover, keyboard, and clickpad, non-backlit keyboard	P81037-xx1

Table 6-11 Spare part country codes

For use in country or region	Spare part number
Belgium	-A41
Czech Republic/Slovakia	-FL1
Denmark, Finland, and Norway	-DH1
French Canada	-DB1
France	-051
Germany	-041
Greece	-151
Israel	-BB1
Italy	-061
Japan	-291
Latin America	-161
The Netherlands	-B31
Russia	-251
Saudi Arabia	-171
Slovenia	-BA1
South Korea	-AD1
Spain	-071
Switzerland	-BG1
Taiwan	-AB1
Thailand	-281
Turkey	-141
Ukraine	-BD1
United Kingdom	-031
United States	-001

7 Using Setup Utility (BIOS)

Setup Utility, or Basic Input/Output System (BIOS), controls communication between all the input and output devices on the system (such as disk drives, display, keyboard, mouse, and printer). Setup Utility (BIOS) includes settings for the types of devices installed, the startup sequence of the computer, and the amount of system and extended memory.

NOTE: To start Setup Utility on convertible computers, your computer must be in notebook mode and you must use the keyboard attached to your notebook.

Starting Setup Utility (BIOS)

You have several ways to access the Setup Utility (BIOS).

IMPORTANT: Use extreme care when making changes in Setup Utility (BIOS). Errors can prevent the computer from operating properly.

Use one of these options:

- Turn on or restart the computer and quickly press f10.
- Turn on or restart the computer, quickly press esc, and then press f10 when the Start menu is displayed.

Updating Setup Utility (BIOS)

Updated versions of Setup Utility (BIOS) might be available on the HP website. Most BIOS updates on the HP website are packaged in compressed files called *SoftPaqs*. Some download packages contain a file named `Readme.txt`, which contains information regarding installing and troubleshooting the file.

Determining the BIOS version

To decide whether you need to update Setup Utility (BIOS), first determine the BIOS version on your computer.

To reveal the BIOS version information (also known as *ROM date* and *System BIOS*), use one of these options.

- HP Support Assistant
  1. Perform one of these tasks:
     - Select the **Search** icon in the taskbar, type `support` in the search box, and then select the **HP Support Assistant** app.
     - Select the question mark icon in the taskbar.
  2. Under **My notebook**, select **Specifications**.
- Setup Utility (BIOS)

1. Start Setup Utility (BIOS) (see Starting Setup Utility (BIOS) on page 73).
2. Select **Main**, and then make note of the BIOS version.
3. Select **Exit**, select one of the options, and then follow the on-screen instructions.

- In Windows, press ctrl+alt+s.

To check for later BIOS versions, see Preparing for a BIOS update on page 74.

Preparing for a BIOS update

Be sure to follow all prerequisites before downloading and installing a BIOS update.

IMPORTANT: To reduce the risk of damage to the computer or an unsuccessful installation, download and install a BIOS update only when the computer is connected to reliable external power using the HP AC adapter provided with the computer (select products only), a replacement AC adapter provided by HP, or an AC adapter with the power rating specified on the product label. Do not download or install a BIOS update while the computer is running on battery power, docked in an optional docking device, or connected to an optional power source. During the download and installation, follow these instructions:

- Do not disconnect power from the computer by unplugging the power cord from the AC outlet.
- Do not shut down the computer or initiate Sleep.
- Do not insert, remove, connect, or disconnect any device, cable, or cord.

NOTE: If your computer is connected to a network, consult the network administrator before installing any software updates, especially system BIOS updates.

Downloading a BIOS update

After you review the prerequisites, you can check for and download BIOS updates.

1. Perform one of these tasks:
   - Select the **Search** icon in the taskbar, type `support` in the search box, and then select the **HP Support Assistant** app.
   - Select the question mark icon in the taskbar.
2. Select **Updates**. The **Checking for Updates** window opens, and Windows checks for updates.
3. Follow the on-screen instructions.
4. At the download area, follow these steps:
   a. Identify the most recent BIOS update and compare it to the BIOS version currently installed on your computer. If the update is more recent than your BIOS version, make a note of the date, name, or other identifier. You might need this information to locate the update later, after it has been downloaded to your hard drive.
   b. Follow the on-screen instructions to download your selection to the hard drive.

      Make a note of the path to the location on your hard drive where the BIOS update is downloaded. You will need to access this path when you are ready to install the update.

Installing a BIOS update

BIOS installation procedures vary. Follow any instructions that appear on the screen after the download is complete. If no instructions appear, follow these steps.

1. Select the **Search** icon in the taskbar, type `file` in the search box, and then select **File Explorer**.
2. Select your hard drive designation. The hard drive designation is typically Local Disk (C:).
3. Using the hard drive path you recorded earlier, open the folder that contains the update.
4. Double-click the file that has an .exe extension (for example, *filename*.exe).

   The BIOS installation begins.
5. Complete the installation by following the on-screen instructions.

NOTE: After a message on the screen reports a successful installation, you can delete the downloaded file from your hard drive.

8 Using HP PC Hardware Diagnostics

You can use the HP PC Hardware Diagnostics utility to determine whether your computer hardware is running properly. The three versions are HP PC Hardware Diagnostics Windows, HP PC Hardware Diagnostics UEFI (Unified Extensible Firmware Interface), and (for select products only) Remote HP PC Hardware Diagnostics UEFI, a firmware feature.

Using HP PC Hardware Diagnostics Windows (select products only)

HP PC Hardware Diagnostics Windows is a Windows-based utility that allows you to run diagnostic tests to determine whether the computer hardware is functioning properly. The tool runs within the Windows operating system to diagnose hardware failures.

If HP PC Hardware Diagnostics Windows is not installed on your computer, you must download and install it. To download HP PC Hardware Diagnostics Windows, see Downloading HP PC Hardware Diagnostics Windows on page 77.

Using an HP PC Hardware Diagnostics Windows hardware failure ID code

When HP PC Hardware Diagnostics Windows detects a failure that requires hardware replacement, a 24-digit failure ID code is generated for select component tests. For interactive tests, such as keyboard, mouse, or audio and video palette, you must perform troubleshooting steps before you can receive a failure ID.

You have several options after you receive a failure ID:

- Select **Next** to open the Event Automation Service (EAS) page, where you can log the case.
- Scan the QR code with your mobile device, which takes you to the EAS page, where you can log the case.
- Select the box next to the 24-digit failure ID to copy your failure code and send it to support.

Accessing HP PC Hardware Diagnostics Windows

After HP PC Hardware Diagnostics Windows is installed, you can access it from HP Support Assistant or the Start menu.

Accessing HP PC Hardware Diagnostics Windows from HP Support Assistant (select products only)

After HP PC Hardware Diagnostics Windows is installed, follow these steps to access it from HP Support Assistant.

1. Complete one of the following tasks:
   - Select the **Search** icon in the taskbar, type `support` in the search box, and then select the **HP Support Assistant** app.
   - Select the question mark icon in the taskbar.

2. Select **Fixes & Diagnostics**.
3. Select **Run hardware diagnostics**, and then select **Launch**.
4. When the tool opens, select the type of diagnostic test that you want to run, and then follow the on-screen instructions.

NOTE: To stop a diagnostic test, select **Cancel**.

Accessing HP PC Hardware Diagnostics Windows from the Start menu (select products only)

After HP PC Hardware Diagnostics Windows is installed, follow these steps to access it from the Start menu.

1. Select the **Start** button, and then select **All apps**.
2. Select **HP PC Hardware Diagnostics Windows**.
3. When the tool opens, select the type of diagnostic test that you want to run, and then follow the on-screen instructions.

NOTE: To stop a diagnostic test, select **Cancel**.

Downloading HP PC Hardware Diagnostics Windows

The HP PC Hardware Diagnostics Windows downloading instructions are provided in English only. You must use a Windows computer to download this tool because only .exe files are provided.

Downloading the latest HP PC Hardware Diagnostics Windows version from HP

To download HP PC Hardware Diagnostics Windows from HP, follow these steps.

1. Go to http://www.hp.com/go/techcenter/pcdiags. The HP PC Diagnostics home page is displayed.
2. Select **Diagnose PC Hardware issues in Windows**, scroll down to the expanded window that appears, and then select **Download**.
3. A pop-up that asks what you want to do with the file opens. Select **Open** or **Save As**. The latest version of the diagnostics tool opens or downloads to the selected location.

Downloading the HP PC Hardware Diagnostics Windows from the Microsoft Store

You can download the HP PC Hardware Diagnostics Windows from the Microsoft Store.

1. Select the Microsoft Store app on your desktop or select the **Search** icon in the taskbar, and then type `Microsoft Store` in the search box.
2. Type `HP PC Hardware Diagnostics Windows` in the **Microsoft Store** search box.
3. Follow the on-screen directions.

The tool downloads to the selected location.

Downloading HP Hardware Diagnostics Windows by product name or number (select products only)

You can download HP PC Hardware Diagnostics Windows by product name or number.

NOTE: For some products, you might have to download the software to a USB flash drive by using the product name or number.

1. Go to http://www.hp.com/support.
2. Select **Software and Drivers**, select your type of product, and then enter the product name or number in the search box that is displayed.
3. In the **Diagnostics** section, select **Download**, and then follow the on-screen instructions to select the specific Windows diagnostics version to be downloaded to your computer or USB flash drive.

The tool downloads to the selected location.

Installing HP PC Hardware Diagnostics Windows

To install HP PC Hardware Diagnostics Windows, navigate to the folder on your computer or the USB flash drive where the .exe file downloaded, double-click the .exe file, and then follow the on-screen instructions.

Using HP PC Hardware Diagnostics UEFI

HP PC Hardware Diagnostics Unified Extensible Firmware Interface (UEFI) allows you to run diagnostic tests to determine whether the computer hardware is functioning properly. The tool runs outside the operating system so that it can isolate hardware failures from issues that are caused by the operating system or other software components.

NOTE: For some products, you must use a Windows computer and a USB flash drive to download and create the HP UEFI support environment because only .exe files are provided. For more information, see Downloading HP PC Hardware Diagnostics UEFI to a USB flash drive on page 79.

If your PC does not start in Windows, you can use HP PC Hardware Diagnostics UEFI to diagnose hardware issues.

Using an HP PC Hardware Diagnostics UEFI hardware failure ID code

When HP PC Hardware Diagnostics UEFI detects a failure that requires hardware replacement, a 24-digit failure ID code is generated.

For assistance in solving the problem, complete one of these tasks:

- Select **Contact HP**, accept the HP privacy disclaimer, and then use a mobile device to scan the failure ID code that appears on the next screen. The HP Customer Support - Service Center page appears with your failure ID and product number automatically filled in. Follow the on-screen instructions.
- Contact support, and provide the failure ID code.

Starting HP PC Hardware Diagnostics UEFI

To start HP PC Hardware Diagnostics UEFI, follow this procedure.

1. Turn on or restart the computer, and quickly press esc.

2. Press f2.

   The BIOS searches three places for the diagnostic tools, in the following order:

   a. Connected USB flash drive

   NOTE: To download the HP PC Hardware Diagnostics UEFI tool to a USB flash drive, see Downloading the latest HP PC Hardware Diagnostics UEFI version on page 80.

   b. Hard drive

   c. BIOS

3. When the diagnostic tool opens, select the type of diagnostic test that you want to run, and then follow the on-screen instructions.

Starting HP PC Hardware Diagnostics UEFI through HP Hotkey Support software (select products only)

This section describes how to start HP PC Hardware Diagnostics UEFI through HP Hotkey Support software.

NOTE: You must disable Fast Boot to access HP PC Hardware Diagnostics UEFI from the HP System Information application.

To disable Fast Boot:

1. Turn on or restart the computer, and when the HP logo appears, press f10 to enter Computer Setup.
2. Select **Advanced**, and then select **Boot Options**.
3. Clear **Fast Boot**.
4. Select **Save Changes and Exit**, and then select **Yes**.

To start HP PC Hardware Diagnostics UEFI through HP Hotkey Support software, follow this procedure:

1. From the **Start** menu, open the HP System Information Application or press fn+esc.
2. In HP System Information screen, select **Run System Diagnostics**, select **Yes** to run the application, and then select **Restart**.

IMPORTANT: To prevent loss of data, save your work in all open apps before restarting your computer.

NOTE: When the restart is complete, the computer opens the HP PC Hardware Diagnostics UEFI Application. Proceed with the troubleshooting tests.

Downloading HP PC Hardware Diagnostics UEFI to a USB flash drive

Downloading HP PC Hardware Diagnostics UEFI to a USB flash drive can be useful in some situations.

- HP PC Hardware Diagnostics UEFI is not included in the preinstallation image.
- HP PC Hardware Diagnostics UEFI is not included in the HP Tool partition.

- The hard drive is damaged.

NOTE: The HP PC Hardware Diagnostics UEFI downloading instructions are provided in English only, and you must use a Windows computer to download and create the HP UEFI support environment because only `.exe` files are provided.

Downloading the latest HP PC Hardware Diagnostics UEFI version

To download the latest HP PC Hardware Diagnostics UEFI version to a USB flash drive, follow these steps.

1. Go to http://www.hp.com/go/techcenter/pcdiags. The HP PC Diagnostics home page is displayed.
2. Select **Diagnose PC Hardware Issues outside of the OS**, scroll down to the expanded window that appears, and then select **Download**.
3. A pop-up that asks what you want to do with the file opens. Select **Open** or **Save As**. The latest version of the diagnostics tool opens or downloads to the selected location.

Downloading HP PC Hardware Diagnostics UEFI by product name or number (select products only)

You can download HP PC Hardware Diagnostics UEFI by product name or number (select products only) to a USB flash drive.

NOTE: For some products, you might have to download the software to a USB flash drive by using the product name or number.

1. Go to http://www.hp.com/support.
2. Enter the product name or number, select your computer, and then select your operating system.
3. In the **Diagnostics** section, follow the on-screen instructions to select and download the specific UEFI Diagnostics version for your computer.

Using Remote HP PC Hardware Diagnostics UEFI settings (select products only)

Remote HP PC Hardware Diagnostics UEFI is a firmware (BIOS) feature that downloads HP PC Hardware Diagnostics UEFI to your computer. It can then run the diagnostics on your computer, and it might upload results to a preconfigured server.

For more information about Remote HP PC Hardware Diagnostics UEFI, go to http://www.hp.com/go/techcenter/pcdiags, select **Diagnose Other Potential Issues**, scroll down to **Remote PC Hardware Diagnostics UEFI**, and then select **Learn More**.

Downloading Remote HP PC Hardware Diagnostics UEFI

Remote HP PC Hardware Diagnostics UEFI is also available as a SoftPaq that you can download to a server.

Downloading the latest Remote HP PC Hardware Diagnostics UEFI version

You can download the latest Remote HP PC Hardware Diagnostics UEFI version to a USB flash drive.

1. Go to http://www.hp.com/go/techcenter/pcdiags. The HP PC Diagnostics home page is displayed.

2. Select **Diagnose PC Hardware Issues outside of the OS**, scroll down to the expanded window that appears, and then select **Download**.

3. A pop-up that asks what you want to do with the file opens. Select **Open** or **Save As**. The latest version of the diagnostics tool opens or downloads to the selected location.

Downloading Remote HP PC Hardware Diagnostics UEFI by product name or number

You can download Remote HP PC Hardware Diagnostics UEFI by product name or number.

NOTE: For some products, you might have to download the software by using the product name or number.

1. Go to http://www.hp.com/support.

2. Select **Software and Drivers**, select your type of product, enter the product name or number in the search box that is displayed, select your computer, and then select your operating system.

3. In the **Diagnostics** section, follow the on-screen instructions to select and download the **Remote UEFI** version for the product.

Customizing Remote HP PC Hardware Diagnostics UEFI settings

Using the Remote HP PC Hardware Diagnostics setting in Computer Setup (BIOS), you can perform several customizations.

- Set a schedule for running diagnostics unattended. You can also start diagnostics immediately in interactive mode by selecting **Execute Remote HP PC Hardware Diagnostics UEFI**.
- Set the location for downloading the diagnostic tools. This feature provides access to the tools from the HP website or from a server that has been preconfigured for use. Your computer does not require the traditional local storage, such as a hard drive or USB flash drive, to run remote diagnostics.
- Set a location for storing the test results. You can also set the user name and password that you use for uploads.
- Display status information about the diagnostics run previously.

To customize Remote HP PC Hardware Diagnostics UEFI settings, follow these steps:

1. Turn on or restart the computer, and when the HP logo appears, press f10 to enter Computer Setup.

2. Select **Advanced**, and then select **Settings**.

3. Make your customization selections.

4. Select **Main**, then select **Save Changes and Exit** to save your settings.

Your changes take effect when the computer restarts.

9 Backing up, restoring, and recovering

You can use Windows tools or HP software to back up your information, create a restore point, reset your computer, create recovery media, or restore your computer to its factory state. Performing these standard procedures can return your computer to a working state faster.

IMPORTANT: If you are performing recovery procedures on a tablet, the tablet battery must be at least 70% charged before you start the recovery process.

IMPORTANT: For a tablet with a detachable keyboard, connect the tablet to the keyboard base before beginning any recovery process.

Backing up information and creating recovery media

These methods of creating recovery media and backups are available on select products only.

Using Windows tools for backing up

HP recommends that you back up your information immediately after initial setup. You can do this task either using Windows Backup locally with an external USB flash drive or using online tools.

NOTE: If computer storage is 32 GB or less, Microsoft System Restore is disabled by default.

Using the HP Cloud Recovery Download Tool to create a recovery USB flash drive (select products only)

You can use the HP Cloud Recovery Download Tool to create an HP Recovery bootable USB flash drive.

For details:

- Go to http://www.hp.com, search for HP Cloud Recovery, and then select the result that matches the type of computer that you have and follow the on-screen instructions.

NOTE: In select countries, if you cannot create the HP Recovery USB flash drive yourself, contact support. Go to http://www.hp.com/support, select your country or region, and then follow the on-screen instructions.

IMPORTANT: HP recommends that you follow the Restoring and recovery methods on page 83 to restore your computer before you obtain and use the HP USB flash drive. Using a recent backup can return your machine to a working state sooner than using the HP USB flash drive. After the system is restored, reinstalling all the operating system software released since your initial purchase can be a lengthy process.

Restoring and recovering your system

You have several tools available to recover your system both within and outside of Windows if the desktop cannot load.

HP recommends that you attempt to restore your system using the Restoring and recovery methods on page 83.

Creating a system restore

System Restore is available in Windows. The System Restore software can automatically or manually create restore points, or snapshots, of the system files and settings on the computer at a particular point.

When you use System Restore, it returns your computer to its state at the time you made the restore point. Your personal files and documents should not be affected.

Restoring and recovery methods

After you run the first method, test to see whether the issue still exists before you proceed to the next method, which might now be unnecessary.

1. Run a Microsoft System Restore.
2. Run Reset this PC.

NOTE: The options **Remove everything** and then **Fully clean the drive** can take several hours to complete and leave no information on your computer. It is the safest way to reset your computer before you recycle it.

3. Recover using the HP Recovery USB flash drive. For more information, see Recovering using the HP Recovery USB flash drive on page 83.

For more information about the first two methods, see the Get Help app:

- Select the **Start** button, select **All apps**, select the **Get Help** app, and then enter the task you want to perform.

NOTE: You must be connected to the internet to access the Get Help app.

Recovering using the HP Recovery USB flash drive

You can use the HP Recovery USB flash drive to recover the operating system and drivers that were installed at the factory. On select products, you can create recovery media on a bootable USB flash drive using the HP Cloud Recovery Download Tool.

For details, see Using the HP Cloud Recovery Download Tool to create a recovery USB flash drive (select products only) on page 82.

NOTE: In select countries, if you cannot create the HP Recovery USB flash drive yourself, contact support. Go to http://www.hp.com/support, select your country or region, and then follow the on-screen instructions.

To recover your system:

- Insert the HP Recovery USB flash drive, and then restart the computer.

NOTE: HP recommends that you follow the Restoring and recovery methods on page 83 to restore your computer before you obtain and use the HP USB flash drive. Using a recent backup can return your machine to a working state sooner than using the HP USB flash drive. After the system is restored, reinstalling all the operating system software released since your initial purchase can be a lengthy process.

Changing the computer boot order

If your computer does not restart using the HP Recovery USB flash drive, you can change the computer boot order, which is the order of devices listed in BIOS for startup information.

IMPORTANT: For a tablet with a detachable keyboard, connect the tablet to the keyboard base before beginning these steps.

To change the boot order:

1. Insert the HP Recovery USB flash drive.
2. Access the system **Startup** menu.
   - For computers or tablets with keyboards attached, turn on or restart the computer or tablet, quickly press esc, and then press f9 for boot options.
   - For tablets without keyboards, turn on or restart the tablet, and then quickly press and hold one of the following buttons:
     - Volume up
     - Volume down

     Then select **f9**.
3. Select the USB flash drive to boot from, and then follow the on-screen instructions.

Using HP Sure Recover (select products only)

Select computer models are configured with HP Sure Recover, a PC operating system (OS) recovery solution built into the hardware and software. HP Sure Recover can fully restore the HP OS image without installed recovery software.

Using HP Sure Recover, an administrator or user can restore the system and install:

- Latest version of the OS
- Platform-specific device drivers
- Software applications, in the case of a custom image

To access the latest documentation for HP Sure Recover, go to http://www.hp.com/support. Follow the on-screen instructions to find your product and locate your documentation.

10 Specifications

This chapter provides specifications for your computer system.

Computer specifications

This section provides specifications for your computer. When you travel with your computer, the computer dimensions and weights, as well as input power ratings and operating specifications, provide helpful information.

Table 10-1 Computer specifications

	Metric	U.S.
Dimensions		
Width	**358.6 mm**	14.12 in
Depth	**251.8 mm**	9.91 in
Height (front, plastic)	**18.9 mm**	0.74 in
Height (front, metal)	**18.25 mm**	0.72
Height (rear)	**14.7 mm**	0.58 in
Height (max)	**18.25 mm**	0.72 in
Weight (lowest)		
15 W models	**1720.0 g**	3.79 lbs
45 W models	**1900.0 g**	4.19 lbs
Input power		
Operating voltage and current	5 V DC @ 3 A / 9 V DC @ 3 A / 12 V DC @ 5 A / 15 V DC @ 5 A / 20 V DC @ 5 A - 100 W USB-C 5 V DC @ 3 A / 9 V DC @ 3 A / 12 V DC @ 5 A / 15 V DC @ 4.33 A / 20 V DC @ 3.25 A - 65 W USB-C 5 V DC @ 3 A / 9 V DC @ 3 A / 10 V DC @ 5 A / 12 V DC @ 5 A / 15 V DC @ 4.33 A / 20 V DC @ 3.25 A - 65 W USB-C 5 V DC @ 3 A / 9 V DC @ 3 A / 12 V DC @ 3.75 A /15 V DC @ 3 A - 45 W USB-C 5 V DC @ 3 A / 9 V DC @ 3 A / 10 V DC @ 3.75 A / 12 V DC @ 3.75 A / 15 V DC @ 3 A / 20 V DC @ 2.25 A - 45 W USB-C 5 V DC @ 2 A / 12 V DC @ 3 A /15 V DC @ 3 A - 45 W USB-C	
Temperature		
Operating	**5°C to 35°C**	41°F to 95°F
Nonoperating	**-20°C to 60°C**	-4°F to 140°F
Relative humidity (noncondensing)		

Table 10-1 Computer specifications (continued)

	Metric	U.S.
Operating	10% to 90%	
Nonoperating	5% to 95%	
Maximum altitude (unpressurized)		
Operating	**-15 m to 3,048 m**	-50 ft to 10,000 ft
Nonoperating	**-15 m to 12,192 m**	-50 ft to 40,000 ft

NOTE: Applicable product safety standards specify thermal limits for plastic surfaces. The device operates well within this range of temperatures.

Display specifications

This section provides specifications for your display.

Table 10-2 Display specifications

	Metric	U.S.
Active diagonal size	**40.6 cm**	16.0 in
Resolution	2560 × 1600 (2.5 K)	
	1920 × 1200 (WUXGA)	
Surface treatment	BrightView (WUXGA OLED)	
	Antiglare (2.5 K, WUXGA)	
Brightness	300 nits (WUXGA)	
	500 nits (2.5 K)	
Viewing angle	UWVA	
Backlight	OLED	
	LED	
Display panel interface	eDP	

Solid-state drive specifications

This section provides specifications for your SSDs.

Table 10-3 SSD specifications

	512 GB*	1 TB*
Dimensions		
Height	1.0 mm	1.0 mm
Length	50.8 mm	50.8 mm
Width	28.9 mm	28.9 mm

Table 10-3 SSD specifications (continued)

	512 GB*	1 TB*
Weight	< 10 g	< 10 g
Interface type	PCIe	PCIe
Ready time, maximum (to not busy)	< 1.0 ms	< 1.0 ms
Access times, logical	0.1 ms	0.1 ms
Transfer rate		
Sequential read	up to 2150 MBps	up to 2150 MBps
Random read	Up to 300,000 IOPs	Up to 300,000 IOPs
Sequential write	up to 1550 MBps	up to 1550 MBps
Random write	Up to 100,000 IOPs	Up to 100,000 IOPs
Total logical sectors	1,000,215,216	1,500,336,388
Operating temperature	**0°C to 70°C** (32°F to 158°F)	**0°C to 70°C** (32°F to 158°F)

*Actual accessible capacity is less. Actual drive specifications might differ slightly.

NOTE: Certain restrictions and exclusions apply. Contact support for details.

11 Statement of memory volatility

For general information regarding nonvolatile memory in HP business computers, and to restore nonvolatile memory that can contain personal data after the system has been turned off and the hard drive has been removed, use these instructions.

HP business computer products that use Intel-based or AMD-based system boards contain volatile DDR memory. The amount of nonvolatile memory present in the system depends upon the system configuration. Intel-based and AMD-based system boards contain nonvolatile memory subcomponents as originally shipped from HP, with the following assumptions:

- No subsequent modifications were made to the system.
- No applications, features, or functionality were added to or installed on the system.

Following system shutdown and removal of all power sources from an HP business computer system, personal data can remain on volatile system memory (DIMMs) for a finite period of time and also remains in nonvolatile memory. Use the following steps to remove personal data from the computer, including the nonvolatile memory found in Intel-based and AMD-based system boards.

NOTE: If your tablet has a keyboard base, connect to the keyboard base before beginning steps in this chapter.

Current BIOS steps

Use these instructions to restore nonvolatile memory.

1. Follow these steps to restore the nonvolatile memory that can contain personal data. Restoring or reprogramming nonvolatile memory that does not store personal data is neither necessary nor recommended.

   a. Turn on or restart the computer, and then quickly press esc.

   NOTE: If the system has a BIOS administrator password, type the password at the prompt.

   b. Select **Main**, select **Apply Factory Defaults and Exit**, and then select **Yes** to load defaults. The computer restarts.

   c. During the restart, press esc while the "Press the ESC key for Startup Menu" message is displayed at the bottom of the screen.

   NOTE: If the system has a BIOS administrator password, type the password at the prompt.

   d. Select the **Security** menu, select **Restore Security Settings to Factory Defaults**, and then select **Yes** to restore security level defaults. The computer restarts.

   e. During the restart, press esc while the "Press the ESC key for Startup Menu" message is displayed at the bottom of the screen.

   NOTE: If the system has a BIOS administrator password, type the password at the prompt.

f. If an asset or ownership tag is set, select the **Security** menu and scroll down to the **Utilities** menu. Select **System IDs**, and then select **Asset Tracking Number**. Clear the tag, and then make the selection to return to the prior menu.

g. If a DriveLock password is set, select the **Security** menu, and scroll down to **Hard Drive Utilities** under the **Utilities** menu. Select **Hard Drive Utilities**, select **DriveLock**, and then clear the check box for **DriveLock password on restart**. Select **OK** to proceed.

h. Select the **Main** menu, and then select **Reset BIOS Security to factory default**. Select **Yes** at the warning message. The computer restarts.

i. During the restart, press esc while the "Press the ESC key for Startup Menu" message is displayed at the bottom of the screen.

NOTE: If the system has a BIOS administrator password, type the password at the prompt.

j. Select the **Main** menu, select **Apply Factory Defaults and Exit**, select **Yes** to save changes and exit, and then select **Shutdown**.

k. Restart the system. If the system has a TPM, fingerprint reader, or both, one or two prompts will appear—one to clear the TPM and the other to Reset Fingerprint Sensor. Press or tap f1 to accept or f2 to reject.

l. Remove all power and system batteries for at least 24 hours.

2. Complete one of the following tasks:

- Remove and retain the storage drive.
- Clear the drive contents by using a third-party utility designed to erase data from an SSD.
- Clear the contents of the drive by using the following BIOS Setup Secure Erase command option steps:

NOTE: If you clear data using Secure Erase, you cannot recover it.

a. Turn on or restart the computer, and then quickly press esc.

b. Select the **Security** menu and scroll down to the esc menu.

c. Select **Hard Drive Utilities**.

d. Finish by completing one of these tasks:

- Under **Utilities**, select **Secure Erase**, select the hard drive storing the data you want to clear, and then follow the on-screen instructions to continue.
- Clear the contents of the drive using the following Disk Sanitizer commands steps:

i. Turn on or restart the computer, and then quickly press esc.

ii. Select the **Security** menu and scroll down to the **Utilities** menu.

iii. Select **Hard Drive Utilities**.

iv. Under **Utilities**, select **Disk Sanitizer**, select the hard drive with the data that you want to clear, and then follow the on-screen instructions to continue.

NOTE: The amount of time it takes for Disk Sanitizer to run can be several hours. Plug the computer into an AC outlet before starting.

Nonvolatile memory usage

Use this table to troubleshoot nonvolatile memory usage.

Table 11-1 Troubleshooting information for nonvolatile memory usage

Description	Volatility description	Storage user data	How to erase
Primary storage device, holds the OS, applications, and application settings	Nonvolatile, 8-256 GB of eMMC or NVMe SSD storage, removable	Yes[1]	See Current BIOS steps on page 88 for information about erasing the primary storage device.
System memory (RAM), holds transient data during system operation	Volatile, SODIMM socket. Removable (4 GB/8 GB/16 GB)	Yes	Unplug unit from power.
Permanent system BIOS settings	Nonvolatile, 16 KB, stored	No[2]	See Current BIOS steps on page 88 for information about clearing BIOS settings.
System boot ROM (BIOS)	Nonvolatile memory, 128 Mbit (16 MB) socketed, removable	No	Download the latest BIOS for your model from the HP website and follow the instructions to flash the BIOS that are on the website.
RTC (CMOS) RAM	Volatile memory, 256 bytes located in AMD embedded System on Chip (SoC)	No	**Desktop computers with a CMOS button:** Unplug unit from main power, remove top cover and press the **Clear CMOS** button. **Notebook and desktop computers without a CMOS button:** 1. Press and hold power button for 12 seconds. 2. Press Windows key + V, and then press power button.
Keyboard/mouse (ROM)	Nonvolatile, 2 KB embedded in the super I/O controller (SIO2)	Yes	N/A
Keyboard/mouse (RAM)	Volatile, 256 bytes embedded in the super I/O controller (SIO2)	No	Unplug unit from main power.
LOM EEPROM	Nonvolatile, 2 MB embedded in LAN controller	No	N/A
TPM	Nonvolatile, 51 KB ROM for firmware and 38 KB system parametric data	No[3]	See Current BIOS steps on page 88 for information about clearing TPM.

[1] Under typical operation, the only user data stored on the primary storage device are preferences for device configuration and settings for connections. However, the administrator can configure the system to allow users to store data locally.

[2] The only user data potentially stored in BIOS Settings are the ownership and asset tags, administrator password, and startup password.

[3] The TPM might contain encrypted passwords or certificates generated from user or administrator input.

Questions and answers

Use this section to answer your questions about nonvolatile memory.

1. **How can the BIOS settings be restored (returned to factory settings)?**

IMPORTANT: The restore defaults feature does not securely erase any information on your hard drive. See question and answer 6 for steps to securely erase information.

The restore defaults feature does not reset the Custom Secure Boot keys. See question and answer 7 for information about resetting the keys.

   a. Turn on or restart the computer, and then quickly press esc.

   b. Select **Main**, and then select **Apply Factory Defaults and Exit**.

   c. Follow the on-screen instructions.

   d. Select **Main**, select **Save Changes and Exit**, and then follow the on-screen instructions.

2. **What is a UEFI BIOS?**

   The Unified Extensible Firmware Interface (UEFI) BIOS is an industry-standard software interface between the platform firmware and an operating system (OS). It replaces the older legacy BIOS architecture.

   The UEFI BIOS provides an interface to display the system information and configuration settings and to change the configuration of your computer before an OS is loaded. BIOS provides a secure runtime environment that supports a GUI. In this environment, you can use either a pointing device (touch screen, touchpad, pointing stick, or USB mouse) or the keyboard to navigate and make menu and configuration selections. The UEFI BIOS also contains basic system diagnostics.

   In addition, the UEFI BIOS works to initialize the computer's hardware before loading and executing the OS; the runtime environment allows the loading and execution of software programs from storage devices to provide more functionality, such as advanced hardware diagnostics (with the ability to display more detailed system information) and advanced firmware management and recovery software.

3. **Where is the UEFI BIOS located?**

   The UEFI BIOS is located on a flash memory chip. You must use a utility to write to the chip.

4. **What kind of configuration data is stored on the DIMM Serial Presence Detect (SPD) memory module? How would this data be written?**

The DIMM SPD memory contains information about the memory module, such as size, serial number, data width, speed and timing, voltage, and thermal information. This information is written by the module manufacturer and stored on an EEPROM. You cannot write to this EEPROM when the memory module is installed in a computer. Third-party tools do exist that can write to the EEPROM when the memory module is not installed in a computer. Various third-party tools are available to read SPD memory.

5. **What is meant by "Restore the nonvolatile memory found in Intel-based system boards"?**

   This message relates to clearing the Real Time Clock (RTC) CMOS memory that contains computer configuration data.

6. **How can the BIOS security be reset to factory defaults and erase the data?**

IMPORTANT: Resetting results in the loss of information.

These steps do not reset Custom Secure Boot Keys. See question and answer 7 for information about resetting the keys.

   a. Turn on or restart the computer, and then quickly press esc.

   b. Select **Main**, and then select **Reset Security to Factory Defaults**.

   c. Follow the on-screen instructions.

   d. Select **Main**, select **Save Changes and Exit**, and then follow the on-screen instructions.

7. **How can the Custom Secure Boot Keys be reset?**

   Secure Boot is a feature to ensure that only authenticated code can start on a platform. If you enabled Secure Boot and created Custom Secure Boot Keys, disabling Secure Boot does not clear the keys. You must also select to clear the Custom Secure Boot Keys. Use the same Secure Boot access procedure that you used to create the Custom Secure Boot Keys, but select to clear or delete all Secure Boot Keys.

   a. Turn on or restart the computer, and then quickly press esc.

   b. Select the **Security** menu, select **Secure Boot Configuration**, and then follow the on-screen instructions.

   c. At the **Secure Boot Configuration** window, select **Secure Boot**, select **Clear Secure Boot Keys**, and then follow the on-screen instructions to continue.

Using HP Sure Start (select products only)

Select computer models are configured with HP Sure Start, a technology that monitors the computer's BIOS for attacks or corruption. If the BIOS becomes corrupted or is attacked, HP Sure Start automatically restores the BIOS to its previously safe state, without user intervention.

HP Sure Start is configured and already enabled so that most users can use the HP Sure Start default configuration. Advanced users can customize the default configuration.

To access the latest documentation on HP Sure Start, go to http://www.hp.com/support. Select **Find your product**, and then follow the on-screen instructions.

12 Power cord set requirements

This chapter provides power cord requirements for countries and regions.

The wide-range input feature of the computer permits it to operate from any line voltage from 100 V AC to 120 V AC, or from 220 V AC to 240 V AC.

The 3-conductor power cord set included with the computer meets the requirements for use in the country or region where the equipment is purchased.

Power cord sets for use in other countries or regions must meet the requirements of the country and region where the computer is used.

Requirements for all countries

These power cord requirements are applicable to all countries and regions.

- The length of the power cord set must be at least **1.0 m** (3.3 ft) and no more than **2.0 m** (6.5 ft).
- All power cord sets must be approved by an acceptable accredited agency responsible for evaluation in the country or region where the power cord set will be used.
- The power cord sets must have a minimum current capacity of 10 A and a nominal voltage rating of 125 V AC or 250 V AC, as required by the power system of each country or region.
- The appliance coupler must meet the mechanical configuration of an EN 60 320/IEC 320 Standard Sheet C13 connector for mating with the appliance inlet on the back of the computer.

Requirements for specific countries and regions

To determine power cord requirements for specific countries and regions, use this table.

Table 12-1 Power cord requirements for specific countries and regions

Country/region	Accredited agency	Applicable note number
Argentina	IRAM	1
Australia	SAA	1
Austria	OVE	1
Belgium	CEBEC	1
Brazil	ABNT	1
Canada	CSA	2
Chile	IMQ	1
Denmark	DEMKO	1
Finland	FIMKO	1
France	UTE	1
Germany	VDE	1

Table 12-1 Power cord requirements for specific countries and regions (continued)

Country/region	Accredited agency	Applicable note number
India	BIS	1
Israel	SII	1
Italy	IMQ	1
Japan	JIS	3
Netherlands	KEMA	1
New Zealand	SANZ	1
Norway	NEMKO	1
The People's Republic of China	CCC	4
Saudi Arabia	SASO	7
Singapore	PSB	1
South Africa	SABS	1
South Korea	KTL	5
Sweden	SEMKO	1
Switzerland	SEV	1
Taiwan	BSMI	6
Thailand	TISI	1
United Kingdom	ASTA	1
United States	UL	2

1. The flexible cord must be Type HO5VV-F, 3-conductor, 0.75 mm² conductor size. Power cord set fittings (appliance coupler and wall plug) must bear the certification mark of the agency responsible for evaluation in the country or region where it will be used.
2. The flexible cord must be Type SVT/SJT or equivalent, No. 18 AWG, 3-conductor. The wall plug must be a 2-pole grounding type with a NEMA 5-15P (15 A, 125 V AC) or NEMA 6-15P (15 A, 250 V AC) configuration. CSA or C-UL mark. UL file number must be on each element.
3. The appliance coupler, flexible cord, and wall plug must bear a T mark and registration number in accordance with the Japanese Dentori Law. The flexible cord must be Type VCTF, 3-conductor, 0.75 mm² or 1.25 mm² conductor size. The wall plug must be a 2-pole grounding type with a Japanese Industrial Standard C8303 (7 A, 125 V AC) configuration.
4. The flexible cord must be Type RVV, 3-conductor, 0.75 mm² conductor size. Power cord set fittings (appliance coupler and wall plug) must bear the CCC certification mark.
5. The flexible cord must be Type H05VV-F 3-conductor, 0.75 mm² conductor size. KTL logo and individual approval number must be on each element. Approval number and logo must be printed on a flag label.
6. The flexible cord must be Type HVCTF 3-conductor, 1.25 mm² conductor size. Power cord set fittings (appliance coupler, cable, and wall plug) must bear the BSMI certification mark.

7. For 127 V AC, the flexible cord must be Type SVT or SJT 3-conductor, 18 AWG, with plug NEMA 5-15P (15 A, 125 V AC), with UL and CSA or C-UL marks. For 240 V AC, the flexible cord must be Type H05VV-F 3-conductor, 0.75 mm² or 1.00 mm² conductor size, with plug BS 1363/A with BSI or ASTA marks.

13 Swelling or deformation of notebook battery

To protect your hardware from potential damage, HP recommends that if you are experiencing battery swelling, stop using the notebook until you can replace the battery.

You can contact HP to understand what battery replacement options are available. To learn more about lithium-ion batteries and the factors that can accelerate battery swelling, see https://support.hp.com/us-en/document/ish_6824662-6824706-16.

Swollen notebook batteries

You might notice that your notebook battery has become somewhat deformed or swollen over time. In some cases, the battery swelling might be significant enough to impact other components of the system including the touchpad, keyboard, and chassis.

Swollen battery is not a safety issue

A swollen battery does not present a safety issue. It is the result of the generation of gases per the normal degradation of the battery cell over time.

HP has worked closely with our battery cell suppliers and third-party industry experts to help minimize the potential for HP batteries to swell over time and to identify that swollen batteries are not a safety issue.

Discontinue using a swollen battery

To protect your hardware from potential damage, HP recommends that, if you are experiencing battery swelling, you stop using the notebook until the battery can be replaced.

You can contact https://www.hp.com/go/contacthp to understand what battery replacement options are available.

Replace a swollen battery

If a battery is under warranty, HP will replace the battery per the terms and conditions of the HP Worldwide Limited Warranty or applicable HP Care Packs.

For batteries no longer under warranty, contact HP to purchase a genuine HP replacement battery.

Minimize battery swelling

Multiple factors can accelerate battery swelling.

To help mitigate battery swelling over time, you can use either HP Adaptive Battery Optimizer (consumer notebooks) or HP Battery Health Manager (commercial notebooks) settings to improve battery longevity and performance for various use scenarios.

Adaptive Battery Optimizer (consumer notebooks)

Adaptive Battery Optimizer technology can help mitigate the factors that cause the battery to swell. It is available on select HP OMEN, HP Spectre, HP Pavilion, and HP ENVY notebook computers.

Adaptive Battery Optimizer has been available on select gaming notebooks since 2019 and select consumer notebooks since 2020. To learn more about enabling Adaptive Battery Optimizer on your HP notebook, see https://support.hp.com/us-en/document/ish_9908083-9908127-16.

HP Battery Health Manager (commercial notebooks)

HP Battery Health Manager provides an easy-to-manage solution to help mitigate factors that cause the battery to swell. It is available on select HP ProBook and HP EliteBook notebook computers.

HP Battery Health Manager is available on select commercial notebooks manufactured since 2016. To learn more about HP Battery Health Manager, see https://support.hp.com/us-en/document/ish_4449597-3519507-16.

14 Recycling

When a nonrechargeable or rechargeable battery has reached the end of its useful life, do not dispose of the battery in general household waste. Follow the local laws and regulations in your area for battery disposal.

HP encourages customers to recycle used electronic hardware, HP original print cartridges, and rechargeable batteries. For more information about recycling programs, see the HP website at http://www.hp.com/recycle.

Index

A

AC adapter and battery light, identifying 9
AC adapters, spare part numbers 23
action key, identifying 14
audio-out (headphone)/audio-in (microphone) combo jack, identifying 7
audio, product description 4

B

backup, creating 82
backups 82
battery
  illustrated 20
  spare part number 20
battery swelling 96
BIOS
  determining version 73
  downloading an update 74, 75
  starting the Setup Utility 73
  updating 73
Bluetooth label 16
boot order, changing 84
bottom components 15
bottom cover
  illustrated 21
  removal 34
  spare part number 21, 34
buttons
  left touchpad 11, 12
  right touchpad 11, 12

C

camera
  identifying 10
  illustrated 22
  spare part number 22
camera light, identifying 10
camera privacy cover, identifying 10
caps lock light 13
caring for your computer 30
cautions
  electrostatic discharge 26, 27
cleaning your computer 30
  caring for wood veneer 32
  disinfecting 31
  HP Easy Clean 30
  removing dirt and debris 30
components
  bottom 15
  display 9
  keyboard area 11
  left side 8
  lights 12
  right side 7
  touchpad 11
computer major components 17
computer specifications 85
connectors
  power 8
control zone 11

D

display
  specifications 85, 86
display assembly
  subcomponents 21
display back cover
  illustrated 23
  spare part number 23
display cable
  illustrated 23
  spare part number 23
display components 9
display panel
  illustrated 23
  product description 2
  spare part number 23

E

electrostatic discharge (ESD) 26, 27
  preventing damage 26-28
esc key, identifying 14

F

fan
  illustrated 21
  removal 51
  spare part number 21, 51
fn key, identifying 14

G

graphics, product description 2
grounding methods 26-28
guidelines
  packaging 26, 32
  transporting 26, 32
  workstation 26

H

hard drive
  product description 3
  specifications 85
HDMI port
  identifying 8
heat sink
  illustrated 21, 54
  removal 54
  spare part number 21, 54
  spare part numbers 54
hinge
  illustrated 23
  spare part number 23
HP PC Hardware Diagnostics UEFI
  downloading 79
  failure ID code 78
  HP Hotkey Support software 79
  starting 78, 79
  using 78
HP PC Hardware Diagnostics Windows
  accessing 76, 77
  downloading 77
  failure ID code 76
  installing 78
  using 76
HP Recovery media recovery 83
HP Sure Recover 84
HP Sure Start 88

I

I/O board
  removal 53
  spare part number 53
illustrated parts catalog 17

integrated numeric keypad, identifying 14
internal microphones, identifying 10

J

jacks
audio-out (headphone)/audio-in (microphone) 7
network 7
RJ-45 (network) 7

K

keyboard
product description 4
keyboard country codes 71
keypad, integrated numeric 14
keys
action 14
esc 14
fn 14
num lock 14
power 15
Windows 14

L

labels
Bluetooth 16
regulatory 16
serial number 16
service 16
wireless certification 16
WLAN 16
left control zone, identifying 11
left side components 8
lights
AC adapter and battery 9
camera 10
caps lock 13
microphone mute 13
mute 13
power 13
RJ-45 (network) status 7
touchpad 11
low blue light mode 9

M

memory
nonvolatile 88
volatile 88
memory module
product description 2
memory modules
removal 48
spare part numbers 48
microphone
product description 4
microphone mute light, identifying 13
mute light, identifying 13

N

network jack, identifying 7
nonvolatile memory 88
num lock key, identifying 14

O

OLED board
illustrated 23
spare part number 23
operating system, product description 5

P

packaging guidelines 26, 32
pointing device, product description 4
ports
HDMI 8
product description 4
USB 7, 8
USB Type-C power connector and port 8
power connector
identifying 8
power cord
requirements for all countries 93
requirements for specific countries and regions 93
set requirements 93
power cords, spare part numbers 23
power key, identifying 15
power light, identifying 13
power requirements, product description 4
primary storage
product description 3
processor
product description 1
product description
audio 4
display panel 2
graphics 2
hard drive 3
keyboard 4
memory module 2
microphone 4
operating system 5
pointing device 4
ports 4
power requirements 4
primary storage 3
processors 1
security 5
serviceability 6
solid-state drive 3
video 4
wireless 4
product name and number, computer 16

R

recovery 82
discs 83
media 83
USB flash drive 83
recovery media 82
creating using HP Cloud Recovery Download Tool 82
creating using Windows tools 82
regulatory information
regulatory label 16
wireless certification labels 16
Remote HP PC Hardware Diagnostics UEFI settings
customizing 81
using 80
removal and replacement procedures 34, 45
solid-state drive 45
removing personal data from volatile system memory 88
restoring 82
restoring and recovery methods 83
right control zone, identifying 11
right side components 7
RJ-45 (network) jack, identifying 7
RJ-45 (network) status lights, identifying 7

S

Screw Kit, spare part number 23
security cable slot, identifying 8
security, product description 5

serial number, computer 16
service labels, locating 16
serviceability, product
description 6
slots
security cable 8
solid-state drive
illustrated 20
product description 3
removal and replacement 45
spare part number 20
specifications 86
speaker
illustrated 21
removal 50
spare part number 21
spare part numbers 50
speakers 15
special keys
identifying 14
using 14
specifications
computer 85
display 85, 86
hard drive 85
solid-state drive 86
static electricity 26, 27
support information 32
Sure Start
using 92
swelling or deformation of
notebook battery 96
system board
illustrated 18, 57
removal 56
spare part number 18, 57
spare part numbers 56
system memory, removing personal
data from volatile 88
system restore 83
system restore point, creating 82

T

top cover with keyboard
illustrated 18
spare part number 18
spare part numbers 71
touchpad
illustrated 18
removal 61
settings 11
spare part number 18
spare part numbers 61
touchpad buttons
identifying 11, 12
touchpad components 11
touchpad light, identifying 11
touchpad settings, adjusting 11
touchpad zone, identifying 11, 12
transporting guidelines 26, 32
traveling with the computer 16

U

USB port, identifying 7, 8
USB Type-C power connector and
port, identifying 8

V

vents, identifying 16
video, product description 4

W

wake-on-voice 9
Windows
backup 82
recovery media 82
system restore point 82
Windows key, identifying 14
Windows tools, using 82
wireless antennas
illustrated 23
spare part number 23
wireless antennas, identifying 10
wireless certification label 16
wireless, product description 4
WLAN antennas, identifying 10
WLAN device 16
WLAN label 16
WLAN module
illustrated 20, 47
removal 47
spare part number 20, 47
workstation guidelines 26