Lenovo

ThinkSystem ST45 V3
System Configuration Guide



Machine Types: 7DH4, 7DH5

Note

Before using this information and the product it supports, be sure to read and understand the safety information and the safety instructions, which are available at:
https://pubs.lenovo.com/safety_documentation/

In addition, be sure that you are familiar with the terms and conditions of the Lenovo warranty for your server, which can be found at:
http://datacentersupport.lenovo.com/warrantylookup

Sixth Edition (November 2025)

© Copyright Lenovo 2024, 2025.

LIMITED AND RESTRICTED RIGHTS NOTICE: If data or software is delivered pursuant to a General Services Administration (GSA) contract, use, reproduction, or disclosure is subject to restrictions set forth in Contract No. GS-35F-05925.

Contents

Contents i

Safety iii

Safety inspection checklist iv

Chapter 1. Introduction 1

Features. 1

Tech Tips 2

Security advisories 2

Specifications 3

Technical specifications. 3

Mechanical specifications 6

Environmental specifications 6

Management options. 8

Chapter 2. Server components 11

Front view 11

Rear view 12

Side view 15

Server locks 16

System-board connectors. 17

Chapter 3. Parts list 19

Power cords 21

Chapter 4. Unboxing and setup 23

Server package contents 23

Identify the server 23

Server setup checklist 26

Chapter 5. System configuration . . . 29

Update the firmware 29

Configure the firmware 29

Starting the Setup Utility program 29

Enabling or disabling a device 29

Enabling or disabling the automatic power-on 30

Using passwords 30

Selecting a startup device 31

Exiting the Setup Utility program 32

Memory configuration 32

RAID configuration 33

Enabling AMD RAIDXpert2. 33

AMD RAIDXpert2 configurations 33

Monitor RAID status 34

Restore (Rebuild) arrays. 34

Deploy the operating system. 35

Back up the server configuration 35

Appendix A. Getting help and technical assistance 37

Before you call 37

Contacting Support 38

Appendix B. Documents and supports 39

Documents download 39

Support websites 39

Appendix C. Notices. 41

Trademarks 42

Important notes. 42

Electronic emission notices 42

Taiwan Region BSMI RoHS declaration 43

Taiwan Region import and export contact information 43

China Energy Label (CEL) 43

© Copyright Lenovo 2024, 2025

Safety

Before installing this product, read the Safety Information.

قبل تركيب هذا المنتج، يجب قراءة الملاحظات الآمنية

Antes de instalar este produto, leia as Informações de Segurança.

在安装本产品之前，请仔细阅读 Safety Information （安全信息）。

安裝本產品之前，請先閱讀「安全資訊」。

Prije instalacije ovog produkta obavezno pročitajte Sigurnosne Upute.

Před instalací tohoto produktu si přečtěte příručku bezpečnostních instrukcí.

Læs sikkerhedsforskrifterne, før du installerer dette produkt.

Lees voordat u dit product installeert eerst de veiligheidsvoorschriften.

Ennen kuin asennat tämän tuotteen, lue turvaohjeet kohdasta Safety Information.

Avant d'installer ce produit, lisez les consignes de sécurité.

Vor der Installation dieses Produkts die Sicherheitshinweise lesen.

Πριν εγκαταστήσετε το προϊόν αυτό, διαβάστε τις πληροφορίες ασφάλειας (safety information).

לפני שתתקינו מוצר זה, קראו את הוראות הבטיחות.

A termék telepítése előtt olvassa el a Biztonsági előírásokat!

Prima di installare questo prodotto, leggere le Informazioni sulla Sicurezza.

製品の設置の前に、安全情報をお読みください。

본 제품을 설치하기 전에 안전 정보를 읽으십시오.

Пред да се инсталира овој продукт, прочитајте информацијата за безбедност.

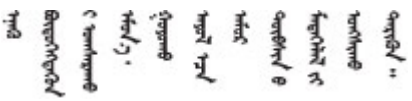

Les sikkerhetsinformasjonen (Safety Information) før du installerer dette produktet.

Przed zainstalowaniem tego produktu, należy zapoznać się z książką "Informacje dotyczące bezpieczeństwa" (Safety Information).

Antes de instalar este produto, leia as Informações sobre Segurança.

© Copyright Lenovo 2024, 2025

Перед установкой продукта прочтите инструкции по технике безопасности.

Pred inštaláciou tohto zariadenia si pečítaje Bezpečnostné predpisy.

Pred namestitvijo tega proizvoda preberite Varnostne informacije.

Antes de instalar este producto, lea la información de seguridad.

Läs säkerhetsinformationen innan du installerar den här produkten.

ཐོན་རྫས་འདི་བདེ་སྤྱོད་མ་བྱས་གོང་། ་སྐོར་གྱི་ཡིད་གཟབ་བྱ་འདྲ་མིན་ཡོད་པའི་འོད་སྡེར་བལྟ་དགོས།

Bu ürünü kurmadan önce güvenlik bilgilerini okuyun.

مەزكۇر مەھسۇلاتنى ئورنىتىشتىن بۇرۇن بىخەتەرلىك ئۇچۇرلىرىنى ئوقۇپ چىقىڭ.

Youq mwngz yungh canjbinj neix gaxgonq, itdingh aeu doeg aen canjbinj soengq cungj vahgangj ancien siusik.

Safety inspection checklist

Use the information in this section to identify potentially unsafe conditions with your server. As each machine was designed and built, required safety items were installed to protect users and service technicians from injury.

Note: The product is not suitable for use at visual display workplaces according to §2 of the Workplace Regulations.

Attention: This is a Class A product. In a domestic environment, this product may cause radio interference in which case the user may be required to take adequate measures.

CAUTION:
This equipment must be installed or serviced by trained personnel, as defined by the IEC 62368-1, the standard for Safety of Electronic Equipment within the Field of Audio/Video, Information Technology and Communication Technology. Lenovo assumes you are qualified in the servicing of equipment and trained in recognizing hazards energy levels in products. Access to the equipment is by the use of a tool, lock and key, or other means of security, and is controlled by the authority responsible for the location.

Important: Electrical grounding of the server is required for operator safety and correct system function. Proper grounding of the electrical outlet can be verified by a certified electrician.

Use the following checklist to verify that there are no potentially unsafe conditions:

1. Make sure that the power is off and the power cord is disconnected.
2. Check the power cord.
   - Make sure that the third-wire ground connector is in good condition. Use a meter to measure third-wire ground continuity for 0.1 ohm or less between the external ground pin and the frame ground.
   - Make sure that the power cord is the correct type.

     To view the power cords that are available for the server:

     a. Go to:

http://dcsc.lenovo.com/#/

b. Click **Preconfigured Model** or **Configure to order**.

c. Enter the machine type and model for your server to display the configurator page.

d. Click **Power → Power Cables** to see all line cords.

- Make sure that the insulation is not frayed or worn.

3. Check for any obvious non-Lenovo alterations. Use good judgment as to the safety of any non-Lenovo alterations.
4. Check inside the server for any obvious unsafe conditions, such as metal filings, contamination, water or other liquid, or signs of fire or smoke damage.
5. Check for worn, frayed, or pinched cables.
6. Make sure that the power-supply cover fasteners (screws or rivets) have not been removed or tampered with.

© Copyright Lenovo 2024, 2025

Chapter 1. Introduction

The ThinkSystem ST45 V3 server (Types 7DH4 and 7DH5) is an entry 1 socket tower server ideal for small businesses, home offices, retail, educational institutions and branch offices. The server supports one AMD® EPYC™ 4004 series processor and up to 64 GB of 5200 MHz ECC DDR5 memory. With the modular design, the server is flexible to be customized for maximum storage capacity or high storage density with selectable input/output options and tiered system management.

Figure 1. ThinkSystem ST45 V3

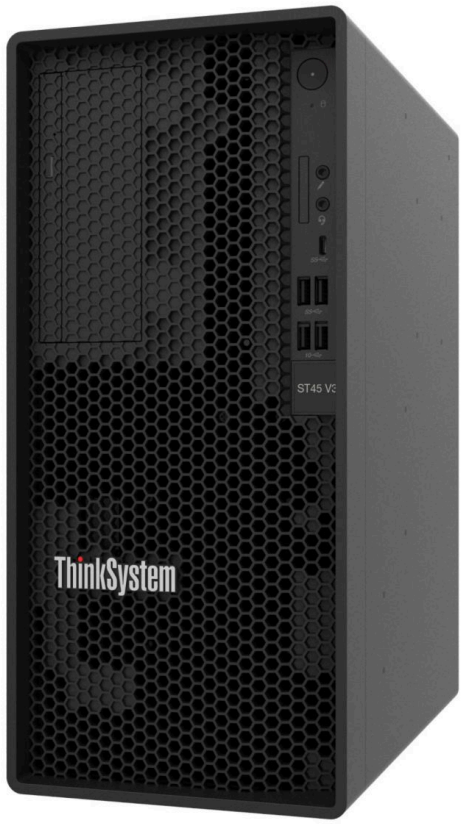

Features

Performance, ease of use, reliability, and expansion capabilities were key considerations in the design of your server. These design features make it possible for you to customize the system hardware to meet your needs today and provide flexible expansion capabilities for the future.

Your server implements the following features and technologies:

- **UEFI-compliant server firmware**

  Lenovo ThinkSystem firmware is Unified Extensible Firmware Interface (UEFI) compliant. UEFI replaces BIOS and defines a standard interface between the operating system, platform firmware, and external devices.

© Copyright Lenovo 2024, 2025

Lenovo ThinkSystem servers are capable of booting UEFI-compliant operating systems, BIOS-based operating systems, and BIOS-based adapters as well as UEFI-compliant adapters.

Note: The server does not support Disk Operating System (DOS).

- **Large system-memory capacity**

  The server supports error-correcting code unbuffered DIMM (ECC UDIMM). For more information about the specific types and maximum amount of memory, see "Technical specifications" on page 3.

- **Large data-storage capacity**

  The server supports a maximum of four drives or three drives and one slim SATA optical disk drive.

- **Mobile access to Lenovo Service Information website**

  The server provides a QR code on the inside of the server cover, that you can scan the QR code with a mobile device and a QR code reader application to get quick access to the Lenovo Service web site for this server. The Lenovo Service Information website provides additional information for parts installation, replacement videos, and error codes for server support.

- **Lenovo XClarity Provisioning Manager Lite**

  Lenovo XClarity Provisioning Manager Lite allows you to configure Redundant Array of Independent Disks (RAID), install compatible operating systems as well as associated device drivers, and run diagnostics. For more details, see https://pubs.lenovo.com/lxpm-lite/.

- **Reliability/Availability/Serviceability (RAS)**

  EPYC 4004 RAS features include on-chip ECC/parity, on-package link CRC, PCIe LCRC, PCIe ECRC, and PCIe uncorrected error detection. Correction of single-bit memory errors and PCIe correctable errors support is limited to the hardware layer and offers no support for Windows Hardware Error Architecture (WHEA) or Error Detection and Correction (EDAC).

- **Tremendous durability**

  The system has been verified to run even enterprise workload, 24/7.

Tech Tips

Lenovo continually updates the support website with the latest tips and techniques that you can use to solve issues that your server might encounter. These Tech Tips (also called retain tips or service bulletins) provide procedures to work around issues or solve problems related to the operation of your server.

To find the Tech Tips available for your server:

1. Go to http://datacentersupport.lenovo.com and navigate to the support page for your server.
2. Click on **How To's** from the navigation pane.
3. Click **Article Type → Solution** from the drop-down menu.

   Follow the on-screen instructions to choose the category for the problem that you are having.

Security advisories

Lenovo is committed to developing products and services that adhere to the highest security standards in order to protect our customers and their data. When potential vulnerabilities are reported, it is the responsibility of the Lenovo Product Security Incident Response Team (PSIRT) to investigate and provide information to our customers so they may put mitigation plans in place as we work toward providing solutions.

The list of current advisories is available at the following site:

https://datacentersupport.lenovo.com/product_security/home

Specifications

Summary of the features and specifications of the server. Depending on the model, some features might not be available, or some specifications might not apply.

Refer to the below table for specifications categories and the content of each category.

Specification category	Technical specifications	Mechanical specifications	Environmental specifications
Content	• Processor • Memory • M.2 drive • Storage expansion • Expansion slots • Integrated functions and I/O connectors • Network • RAID/HBA adapter • System fan • Electrical input • Minimal configuration for debugging • Operating systems	• Dimension • Weight	• Acoustical noise emissions • Environment

Technical specifications

Summary of the technical specifications of server. Depending on the model, some features might not be available, or some specifications might not apply.

Processor
The server supports AMD® EPYC™ 4004 and 4005 series processors. • Up to 12 cores for 4004 series processors and 16 cores for 4005 series processors • Thermal Design Power (TDP): up to 65 W For a list of supported processors, see https://serverproven.lenovo.com.

Memory
See “Memory module installation rules and order” in *User Guide* or *Hardware Maintenance Guide* for detailed information about memory configuration and setup. • Minimum capacity: 16 GB • Maximum capacity: 64 GB • Slots: two DIMM slots (1 DIMM per channel) • Memory module type: – ThinkSystem 16GB TruDDR5 5600MHz (1Rx8) ECC UDIMM-A – ThinkSystem 32GB TruDDR5 5600MHz (2Rx8) ECC UDIMM-A **Note:** ThinkSystem 32GB TruDDR5 5600MHz (2Rx8) ECC UDIMM-A is compatible with 4004 series processors.

M.2 drive

The server supports up to two NVMe M.2 drives of the following drive form factor: 80 mm (2280).
Supports the following M.2 drive capacity:
- 480 GB
- 960 GB

For a list of supported M.2 drives, see https://serverproven.lenovo.com.

Storage expansion

The server supports three 3.5-inch drive bays (optional), one 2.5-inch drive bay (optional), and one ODD bay (optional).
- Drive bay 0 (optional)
  - 3.5-inch hard-disk drive or solid-state drive
- Drive bay 1 (optional)
  - 2.5-inch hard-disk drive or solid-state drive
- Drive bay 2 (optional)
  - 3.5-inch hard-disk drive or solid-state drive
- Drive bay 3 (optional)
  - 3.5-inch hard-disk drive or solid-state drive
- ODD bay (optional)
  - One 9mm slim SATA optical disk drive

For a list of supported drives, see https://serverproven.lenovo.com.

Expansion slots

Two PCIe expansion slots are available:
- PCIe slot 1: PCIe Gen3 x16, FH/HL, 75W
- PCIe slot 3: PCIe Gen3 x1, FH/HL, 25W

Integrated functions and I/O connectors

- Front connectors:
  - One Mic-in connector (supported by Windows Client OS only)
  - One headset connector (supported by Windows Client OS only)
  - One USB Type-C 3.2 Gen 1 (5 Gbps) connector
  - Four USB Type-A 3.2 Gen 1 (5 Gbps) connectors
- Rear connectors:
  - One audio line-out connector (supported by Windows Client OS only)
  - Two DisplayPort (DP) connectors
  - One High-Definition Multimedia Interface (HDMI) connector
  - One Ethernet port (10/100/1000 Mbps RJ-45)
  - Four USB Type-A 2.0 connectors

Note: The maximum video resolution is 3840 x 2160 at 60 Hz.

Network

- One Ethernet port (10/100/1000 Mbps RJ-45)
- One of the following network adapters:
  - ThinkSystem Broadcom 5719 1GbE RJ45 4-Port PCIe Ethernet Adapter
  - ThinkSystem Broadcom 57416 10GBASE-T 2-Port PCIe Ethernet Adapter

RAID adapter

The following options are available for this server.

- Hardware RAID (RAID levels 0, 1, and 5)
  - ThinkSystem RAID 5350-8i PCIe 12Gb Adapter
  - ThinkSystem RAID 545-8i PCIe Gen4 12Gb Adapter
- Software RAID (RAID levels 0 and 1)
  - AMD RAIDXpert2

  Notes:
  - AMD RAIDXpert2 is supported only in Windows Server operating systems.
  - LXPM Lite does not support the AMD RAIDXpert2 function.
  - Users need to build RAID by themselves because ST45 V3 does not support pre-configuring AMD RAIDXpert2 on manufacturing.
  - UEFI version 1.20 (build ID QIE104D) or later is required for the AMD RAIDXpert2 function.

For more information about the RAID/HBA adapters, see Lenovo ThinkSystem RAID Adapter and HBA Reference.

Host bus adapter

- ThinkSystem 4350-8i SAS/SATA 12Gb HBA

For more information about the RAID/HBA adapters, see Lenovo ThinkSystem RAID Adapter and HBA Reference.

System fan

The server supports up to three fans:

- One front fan
- One rear fan
- One processor heat sink fan

Electrical input

The server supports one of the following non-hot-swap, non-redundant power supplies:

- Fixed ATX 300-watt Single-Output Gold
  - Input power 115 Vac or 230 Vac
- Fixed ATX 500-watt Multi-Output Platinum
  - Input power 115 Vac or 230 Vac

Minimal configuration for debugging

- One processor and one processor cooling heat sink
- One 16 GB ECC UDIMM in DIMM slot 1
- One power supply
- One power cord
- One 3.5-inch SATA drive in drive bay 0
- One system front fan (if debugging is out of chassis)

Operating systems
Supported and certified operating systems: • Microsoft Windows Server • Red Hat Enterprise Linux • SUSE Linux Enterprise Server • Canonical Ubuntu References: • Complete list of available operating systems: https://lenovopress.lenovo.com/osig. • OS deployment instructions: “Deploy the operating system” on page 35.

Mechanical specifications

Summary of the mechanical specifications of server. Depending on the model, some features might not be available, or some specifications might not apply.

Dimension
• Width: 170 mm (6.7 inches) • Height: – With stands: 376 mm (14.8 inches) – Without stands: 370 mm (14.6 inches) • Depth: 315.4 mm (12.4 inches)

Weight
Net weight: up to 8.56 kg (18.87 lb) depending upon configuration

Environmental specifications

Summary of the environmental specifications of server. Depending on the model, some features might not be available, or some specifications might not apply.

Acoustical noise emissions

The server has the following acoustic noise emissions declaration:

Configuration		Typical
$L_{WA.m}$ (B)	Idle	3.5
	Operating	4.5
K_v (B)	Idle	0.4
	Operating	0.4
$L_{pA.m}$ (dB)	Idle	24.6

Acoustical noise emissions

	Operating	34.2

Notes:

- These sound levels were measured in controlled acoustical environments according to procedures specified by ISO 7779 and are reported in accordance with ISO 9296. Testing was conducted at 23°C ± 2°C to align with ISO7779 procedures.
- Idling mode is the steady state in which the server is powered on but not operating any intended function. Operating mode 1 is 100% CPU TDP.
- The declared acoustic sound levels are based on the following configuration, which may change depending on configuration/conditions:
  - Typical: 1x 65 W CPU, 2x 32 GB DIMM, 3x 3.5" HDD, 1x 2.5" SSD, 2x 960 GB M.2, 1x 5350-8i RAID, 1x 500 W fixed PSU

Environment

ThinkSystem ST45 V3 complies with ASHRAE Class A2 specifications. System performance may be impacted when the operating temperature is outside AHSARE A2 specification.

- Air temperature:
  - Operating
    - ASHRAE Class A2: 10°C to 35°C (50°F to 95°F); the maximum ambient temperature decreases by 1°C for every 300 m (984 ft) increase in altitude above 900 m (2,953 ft).
  - Server off: 5°C to 45°C (41°F to 113°F)
  - Shipment/storage: -20°C to 60°C (-4°F to 140°F)
- Maximum altitude: 3,050 m (10,000 ft)
- Relative Humidity (non-condensing):
  - Operating: 8% to 80%; maximum dew point: 21°C (70°F)
  - Shipment/storage: 8% to 90%
- Particulate contamination

  Attention: Airborne particulates and reactive gases acting alone or in combination with other environmental factors such as humidity or temperature might pose a risk to the server. For information about the limits for particulates and gases, see “Particulate contamination” on page 7.

Note: The server is designed for standard data center environment and recommended to be placed in industrial data center.

Particulate contamination

Attention: Airborne particulates (including metal flakes or particles) and reactive gases acting alone or in combination with other environmental factors such as humidity or temperature might pose a risk to the device that is described in this document.

Risks that are posed by the presence of excessive particulate levels or concentrations of harmful gases include damage that might cause the device to malfunction or cease functioning altogether. This specification sets forth limits for particulates and gases that are intended to avoid such damage. The limits must not be viewed or used as definitive limits, because numerous other factors, such as temperature or moisture content of the air, can influence the impact of particulates or environmental corrosives and gaseous contaminant transfer. In the absence of specific limits that are set forth in this document, you must implement practices that maintain particulate and gas levels that are consistent with the protection of human health and safety. If Lenovo determines that the levels of particulates or gases in your environment have caused damage to the device, Lenovo may condition provision of repair or replacement of devices or parts on implementation of appropriate remedial measures to mitigate such environmental contamination. Implementation of such remedial measures is a customer responsibility.

Table 1. Limits for particulates and gases

Contaminant	Limits
Reactive gases	Severity level G1 as per ANSI/ISA 71.04-1985[1]: • The copper reactivity level shall be less than 200 Angstroms per month (Å/month ≈ 0.0035 µg/cm^2-hour weight gain).[2] • The silver reactivity level shall be less than 200 Angstroms per month (Å/month ≈ 0.0035 µg/cm^2-hour weight gain).[3] • The reactive monitoring of gaseous corrosivity must be conducted approximately 5 cm (2 in.) in front of the rack on the air inlet side at one-quarter and three-quarter frame height off the floor or where the air velocity is much higher.
Airborne particulates	Data centers must meet the cleanliness level of ISO 14644-1 class 8. For data centers without airside economizer, the ISO 14644-1 class 8 cleanliness might be met by choosing one of the following filtration methods: • The room air might be continuously filtered with MERV 8 filters. • Air entering a data center might be filtered with MERV 11 or preferably MERV 13 filters. For data centers with airside economizers, the choice of filters to achieve ISO class 8 cleanliness depends on the specific conditions present at that data center. • The deliquescent relative humidity of the particulate contamination should be more than 60% RH.[4] • Data centers must be free of zinc whiskers.[5]

[1] ANSI/ISA-71.04-1985. *Environmental conditions for process measurement and control systems: Airborne contaminants*. Instrument Society of America, Research Triangle Park, North Carolina, U.S.A.

[2] The derivation of the equivalence between the rate of copper corrosion growth in the thickness of the corrosion product in Å/month and the rate of weight gain assumes that Cu_2S and Cu_2O grow in equal proportions.

[3] The derivation of the equivalence between the rate of silver corrosion growth in the thickness of the corrosion product in Å/month and the rate of weight gain assumes that Ag_2S is the only corrosion product.

[4] The deliquescent relative humidity of particulate contamination is the relative humidity at which the dust absorbs enough water to become wet and promote ionic conduction.

[5] Surface debris is randomly collected from 10 areas of the data center on a 1.5 cm diameter disk of sticky electrically conductive tape on a metal stub. If examination of the sticky tape in a scanning electron microscope reveals no zinc whiskers, the data center is considered free of zinc whiskers.

Management options

The system management options described in this section are available to help you manage the servers more conveniently and efficiently.

Overview

Offerings	Description
Lenovo XClarity Essentials toolset	Portable and light toolset for data collection and firmware updates. Suitable both for single-server or multi-server management contexts. **Interface** • **OneCLI**: CLI application • **Bootable Media Creator**: CLI application, GUI application **Usage and downloads** https://pubs.lenovo.com/lxce-overview/
Lenovo XClarity Provisioning Manager Lite	UEFI-based embedded GUI tool on a single server that can simplify management tasks. **Interface** • GUI application **Usage and downloads** https://pubs.lenovo.com/lxpm-lite/
Lenovo Capacity Planner	Application that supports power consumption planning for a server or rack. **Interface** • Web GUI Interface **Usage and downloads** https://datacentersupport.lenovo.com/solutions/lnvo-lcp

Functions

Options		Functions				
		OS deployment	**System configuration**	**Firmware updates**[1]	**Inventory/ logs**	**Power planning**
Lenovo XClarity Essentials toolset	OneCLI				√[3]	
	Bootable Media Creator			√[5]		
Lenovo XClarity Provisioning Manager Lite		√	√	√[2]	√[3]	
Lenovo Capacity Planner						√[4]

Notes:

1. Most options can be updated through the Lenovo tools. Some options such as Client HDD firmware require the use of supplier tools.
2. Firmware updates are limited to Lenovo XClarity Provisioning Manager Lite and UEFI updates only. Firmware updates for optional devices, such as adapters, are not supported.
3. Limited inventory.
4. It's highly recommended that you check the power summary data for your server using Lenovo Capacity Planner before purchasing any new parts.

5. Security Boot needs to be disabled for UEFI update on Bootable media Creator (BoMC).

Chapter 2. Server components

This chapter contains information about each of the components associated with the server.

Front view

This section contains information about the controls, LEDs, and connectors on the front of the server.

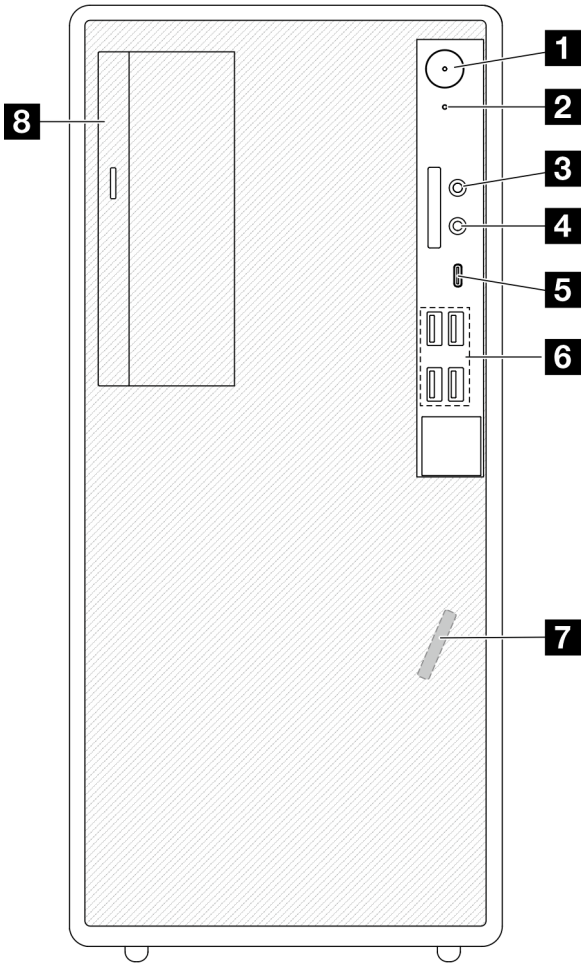

Figure 2. Front view

Table 2. Components on the front view

1 Power button/LED (white)	2 Drive activity LED (white)
3 Mic-in connector (Windows Client OS only)	4 Headset connector (Windows Client OS only)
5 USB Type-C 3.2 Gen 1 (5 Gbps) connector	6 USB Type-A 3.2 Gen 1 (5 Gbps) connectors (x4)
7 Front thermal sensor	8 Optical-drive bay (optional)

© Copyright Lenovo 2024, 2025

1 Power button/LED (white)

Press this button to turn the server on and off manually. The states of the power LED are as follows:

Status	Color	Description
Solid on	white	The server is on.
Off	None	The server is off.

2 Drive activity LED (white)

This LED indicates the activity of the drives.

Note: The drive activity LED only indicates the activities of drives that are connected to the SATA ports on the system board.

Status	Color	Description
Blinking	White	The drives are active.
Off	None	The drives are not active.

3 Mic-in connector

Plug in a microphone to this connector.

Note: This connector is only supported by Windows Client OS.

4 Headset connector

Plug in a headset with microphone to this connector. A standard headphone or microphone can also be plugged into the connector.

Note: This connector is only supported by Windows Client OS.

5 USB Type-C 3.2 Gen 1 (5 Gbps) connector

The connector is available for a Type-C compatible device that requires USB 2.0 or 3.0 connection, such as a keyboard, a mouse, or a USB flash drive.

6 USB Type-A 3.2 Gen 1 (5 Gbps) connectors (x4)

These connectors are available for Type-A compatible devices that require USB 2.0 or 3.0 connection, such as a keyboard, a mouse, or a USB flash drive.

7 Front thermal sensor

The thermal sensor works by converting temperature variations into electrical signals. It can measure the temperature of a system or space.

8 Optical drive bay

Depending on the model, the server might come with an optical drive installed in this drive bay. See “Optical drive and drive cage replacement” in *User Guide* or *Hardware Maintenance Guide*.

Rear view

This section contains information about the important components on the rear of this server.

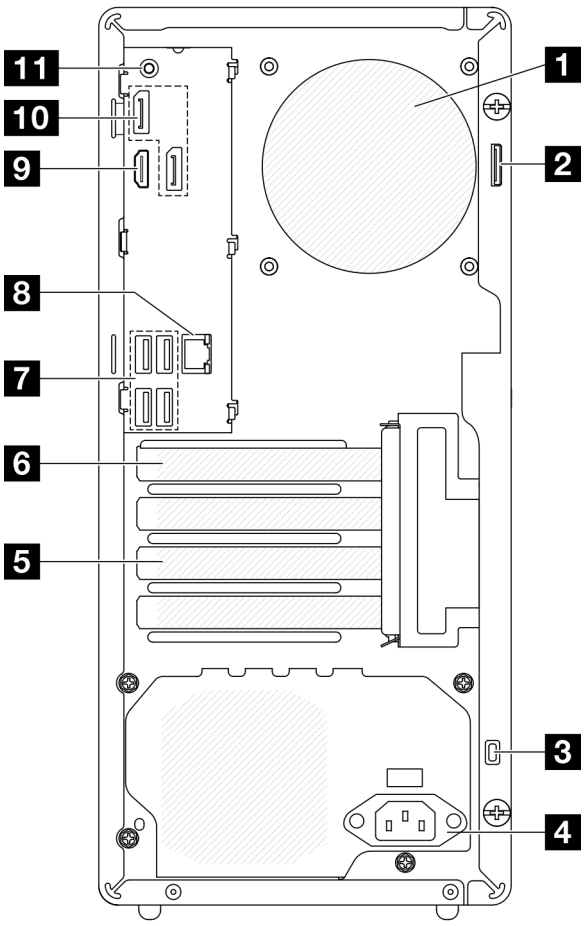

Figure 3. Rear view

Table 3. Components on the rear view

1 Rear fan	2 Padlock loop
3 Kensington lock slot	4 Power cord connector
5 PCIe slot 3	6 PCIe slot 1
7 USB Type-A 2.0 connectors (x4)	8 Ethernet port (10/100/1000 Mbps RJ-45)
9 HDMI connector	10 DisplayPort connectors (x2)
11 Audio line-out connector	

1 Rear fan

The rear fan is installed in this space. See “Install the fan (front and rear)” in *User Guide* or *Hardware Maintenance Guide*.

2 Padlock loop

This loop is available for installing a padlock. See “Server locks” on page 16 for more information.

3 Kensington lock slot

This slot is available for installing a Kensington lock. See “Server locks” on page 16 for more information.

4 Power cord connector

Connect the power cord to this connector.

5/6 PCIe slots

There are two PCIe slots on the system board for installing appropriate PCIe adapters. For information about the PCIe slots, see “Expansion slots” in “Technical specifications” on page 3.

7 USB Type-A 2.0 connectors (x4)

These connectors are available for a Type-A compatible device that require USB 2.0 connection, such as a keyboard, a mouse, or a USB flash drive.

8 Ethernet port (10/100/1000 Mbps RJ-45)

Connect an Ethernet cable to this connector for a LAN. This connector comes with LEDs for status indication.

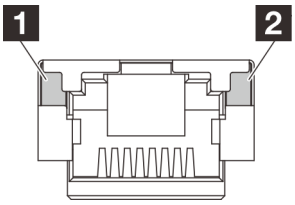

Figure 4. Ethernet port (10/100/1000 Mbps RJ-45) LEDs

LED	Description
1 Link LED	Use this LED to distinguish the network connectivity status: • Off: The network link is disconnected, or the network link is established at the speed of 10 Mbps. • Green: The network link is established at the speed of 100 Mbps. • Orange: The network link is established at the speed of 1000 Mbps.
2 Activity LED	Use this LED to distinguish the network activity status: • Off: No data is being transmitted. • Blinking: Data is being transmitted.

9 HDMI connector

Connect a HDMI-compatible video device, such as a monitor, to this connector.

10 DisplayPort connectors (x2)

Connect a DisplayPort-compatible video device, such as a monitor, to this connector.

11 Audio line-out connector

Connect an audio device, such as a speaker or an earphone, to this connector.

Notes:
- This connector is only supported by Windows Client OS.
- Users may be aware of the low frequency noise via audio port in particular environments.
- Excessive sound pressure from earphone/headphone can cause hearing damage.

Side view

Follow the instructions in this section to locate the components from the side of the server.

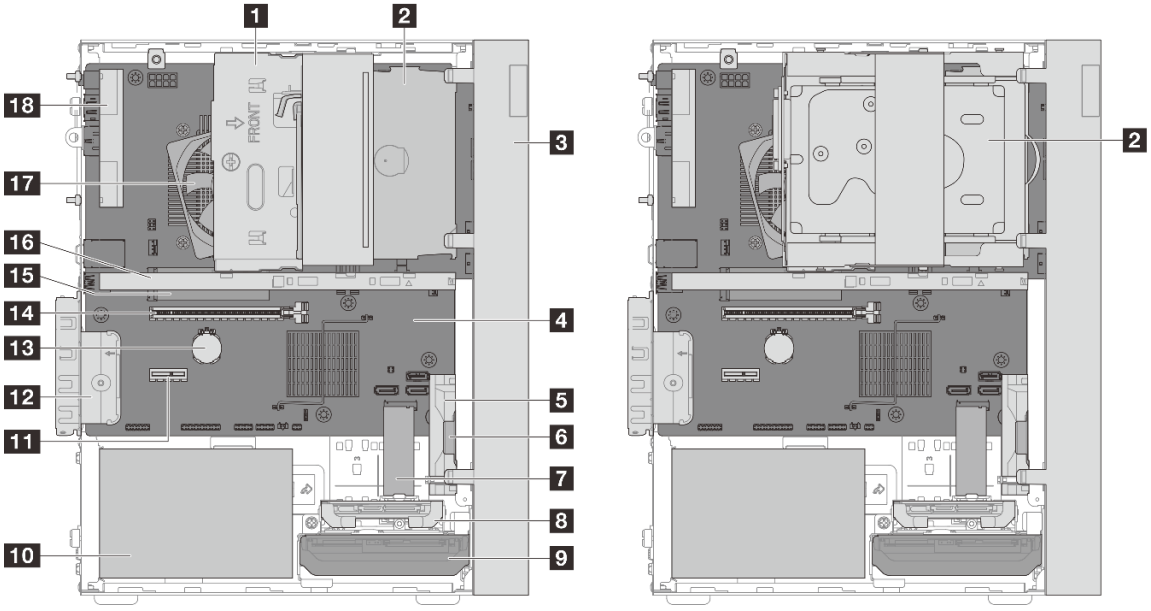

Figure 5. Side view

Table 4. Components on the side view

1 Drive bay 2 (One 3.5-inch SATA drive)*	2 ODD drive bay (One 9mm slim SATA optical disk drive) or Drive bay 3 (One 3.5-inch SATA drive)*
3 Front bezel	4 System board
5 Front fan	6 Mono amplifier (speaker)***
7 M.2 drive 2*	8 Drive bay 1 (One 2.5-inch SATA drive)*
9 Drive bay 0 (One 3.5-inch SATA drive)*	10 Power supply unit
11 PCIe slot 3**	12 PCIe adapter retainer
13 CMOS battery	14 PCIe slot 1
15 M.2 drive 1*	16 Cage bar*
17 Heat sink and fan module	18 Rear fan

* Optional components.

** Currently, there is no PCIe adapter supported in this PCIe x1 slot. Go through the sales channel for additional requests.

*** Depending on chassis, the mono amplifier may not be supported.

Server locks

Locking the server cover prevents unauthorized access to the inside of the server.

Padlock

The server comes with a padlock loop. When a padlock is installed, the server cover cannot be removed.

Note: It is recommended to purchase a padlock from a local store.

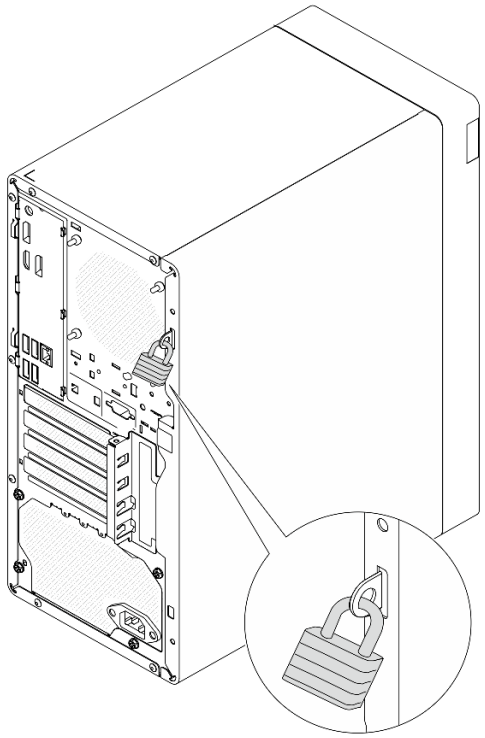

Figure 6. Padlock

Kensington-style cable lock

Use a Kensington-style cable lock to secure the server to a desk, table, or other non-permanent fixture. The cable lock attaches to the security-lock slot at the rear of the server and is operated with a key or combination depending on the type selected. The cable lock also locks the server cover. This is the same type of lock used with many notebook computers. You can order such a cable lock directly from Lenovo by searching for **Kensington** at http://www.lenovo.com/support.

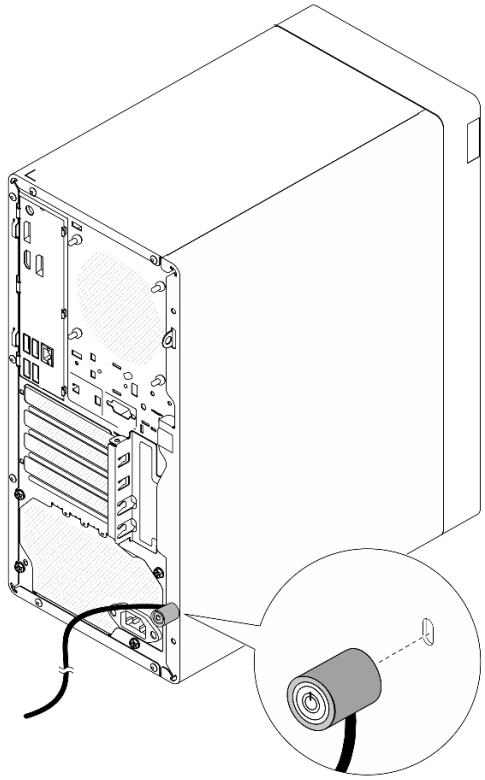

Figure 7. Kensington-style cable lock

System-board connectors

The following illustration shows the internal connectors on the system board.

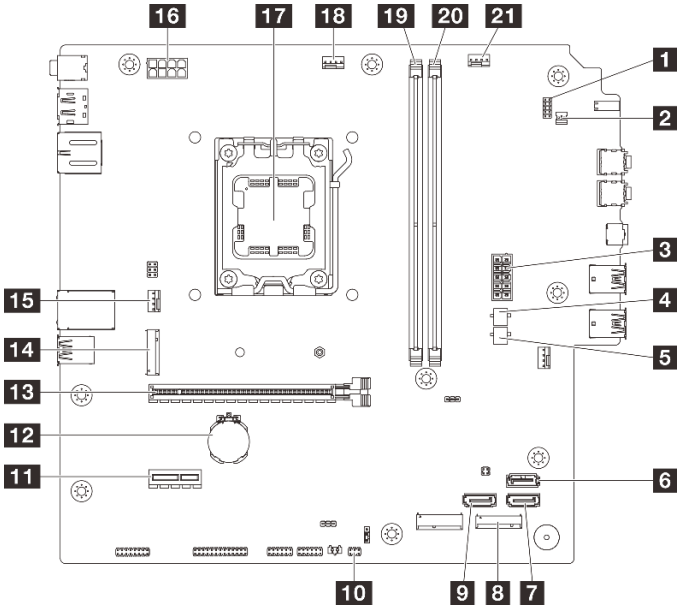

Figure 8. System-board connectors

Table 5. System-board connectors

1 Connector for power button with LED	2 Mono amplifier (speaker) connector
3 System power connector	4 SATA power 1 connector
5 SATA power 2 connector	6 SATA 3 connector *
7 SATA 2 connector	8 M.2 drive 2 connector
9 SATA 1 connector	10 Thermal sensor connector
11 PCIe slot 3**	12 CMOS battery (CR2032)
13 PCIe slot 1	14 M.2 drive 1 connector
15 Rear fan connector	16 Processor power connector
17 Processor socket	18 Processor fan connector
19 DIMM slot 1	20 DIMM slot 2
21 Front fan connector	

* Depending on the model, SATA 3 connctor may not be supported.

** Currently, there is no PCIe adapter supported in this PCIe x1 slot. Go through the sales channel for additional requests.

Chapter 3. Parts list

Identify each of the components that is available for your server with the parts list.

For more information about ordering parts:

1. Go to **http://datacentersupport.lenovo.com** and navigate to the support page for your server.
2. Click **Parts**.
3. Enter the serial number to view a listing of parts for your server.

It is highly recommended that you check the power summary data for your server using Lenovo Capacity Planner before purchasing any new parts.

Note: Depending on the model, your server might look slightly different from the illustration.

© Copyright Lenovo 2024, 2025

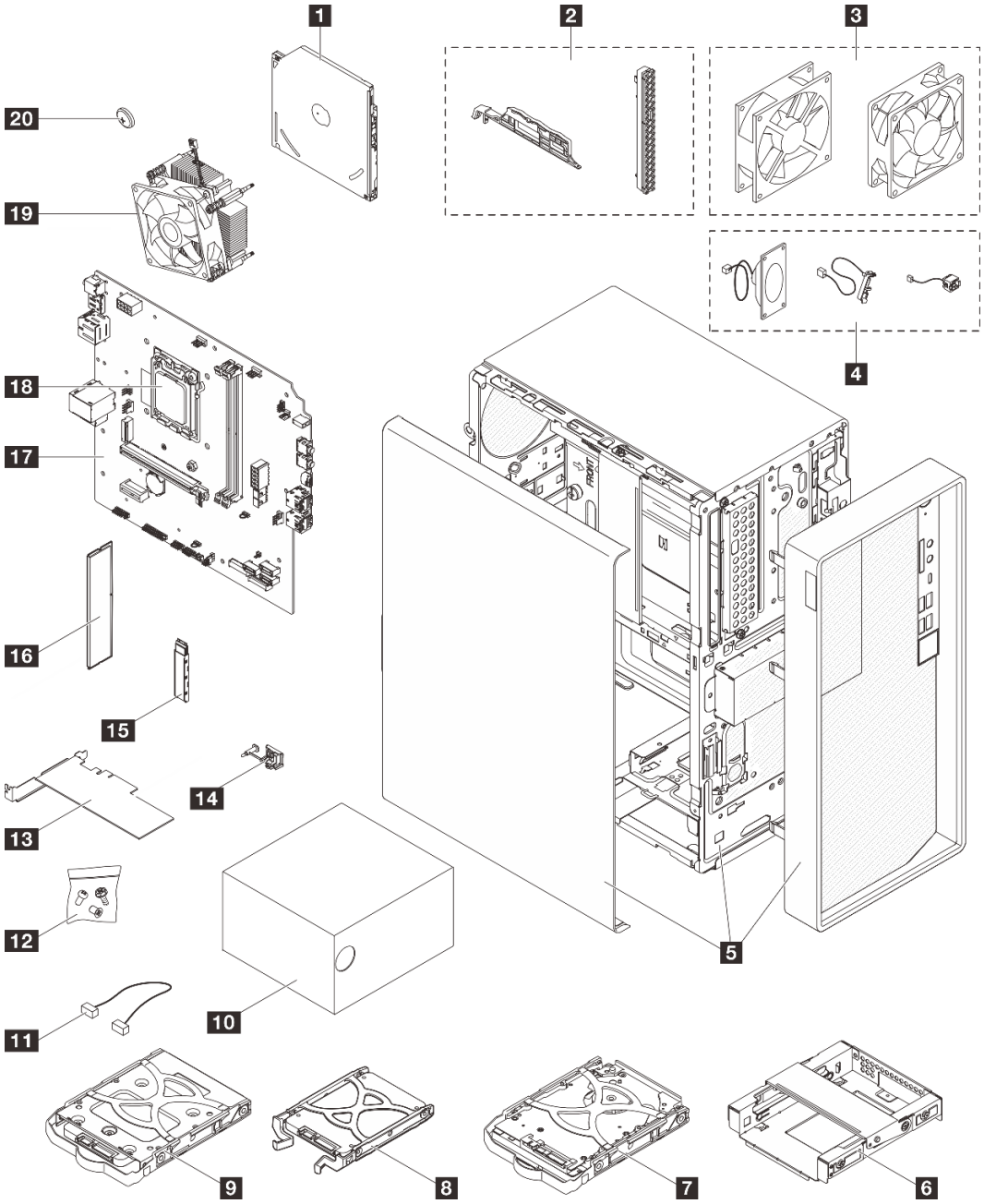

Figure 9. Server components

The parts listed in the following table are identified as one of the following:

- **T1:** Tier 1 customer replaceable unit (CRU). Replacement of Tier 1 CRUs is your responsibility. If Lenovo installs a Tier 1 CRU at your request with no service agreement, you will be charged for the installation.
- **T2:** Tier 2 customer replaceable unit (CRU). You may install a Tier 2 CRU yourself or request Lenovo to install it, at no additional charge, under the type of warranty service that is designated for your server.
- **F:** Field replaceable unit (FRU). FRUs must be installed only by trained service technicians.
- **C:** Consumable and Structural parts. Purchase and replacement of consumable and structural parts (components, such as a filler or bezel) is your responsibility. If Lenovo acquires or installs a structural component at your request, you will be charged for the service.

Description	Type	Description	Type
1 Optical disk drive	T2	2 Bezel kit (including the optical disk drive bezel and latch)	F
3 Fan kit (including the front fan and rear fan)	T1	4 Cable kit (including the mono amplifier, thermal sensor, and power button cable)	T1
5 Chassis (with front bezel and server cover)	F	6 3.5-inch drive cage at bay 3	T1
7 3.5-inch hard-disk drive assembly	T1	8 2.5-inch solid-state drive assembly	T1
9 3.5-inch solid-state drive assembly	T1	10 Power supply unit	T1
11 Cable	T1	12 Screw kit	T1
13 PCIe adapter	T1	14 M.2 drive retainer	T1
15 M.2 drive	T1	16 Memory module	F
17 System board	F	18 Processor	F
19 Heat sink and fan module	F	20 3V CMOS battery (CR2032)	C

Power cords

Several power cords are available, depending on the country and region where the server is installed.

To view the power cords that are available for the server:

1. Go to:

   http://dcsc.lenovo.com/#/

2. Click **Preconfigured Model** or **Configure to order**.
3. Enter the machine type and model for your server to display the configurator page.
4. Click **Power → Power Cables** to see all line cords.

Notes:

- For your safety, a power cord with a grounded attachment plug is provided to use with this product. To avoid electrical shock, always use the power cord and plug with a properly grounded outlet.
- Power cords for this product that are used in the United States and Canada are listed by Underwriter's Laboratories (UL) and certified by the Canadian Standards Association (CSA).
- For units intended to be operated at 115 volts: Use a UL-listed and CSA-certified cord set consisting of a minimum 18 AWG, Type SVT or SJT, three-conductor cord, a maximum of 15 feet in length and a parallel blade, grounding-type attachment plug rated 15 amperes, 125 volts.
- For units intended to be operated at 230 volts (U.S. use): Use a UL-listed and CSA-certified cord set consisting of a minimum 18 AWG, Type SVT or SJT, three-conductor cord, a maximum of 15 feet in length and a tandem blade, grounding-type attachment plug rated 15 amperes, 250 volts.
- For units intended to be operated at 230 volts (outside the U.S.): Use a cord set with a grounding-type attachment plug. The cord set should have the appropriate safety approvals for the country in which the equipment will be installed.
- Power cords for a specific country or region are usually available only in that country or region.

Chapter 4. Unboxing and setup

Information in this chapter assists you on unboxing and setting up the server. When unboxing the server, check if the items in the package are correct, and learn where to find information of server serial number. Make sure to follow the instructions in “Server setup checklist” on page 26 when setting up the server.

Server package contents

When you receive your server, verify that the shipment contains everything that you expected to receive.

The server package includes the following items:

- Server
- Keyboard*
- Material box, including items such as power cords*, accessory kit, and documentation.

Note: Items marked with asterisk (*) are available on some models only.

If any item is missing or damaged, contact your place of purchase. Ensure that you retain your proof of purchase and packing material. They might be required to receive warranty service.

Identify the server

This section contains instruction on how to identify the server.

Identifying your server

When you contact Lenovo for help, the machine type, model, and serial number information help support technicians to identify your server and provide faster service.

The illustration below shows the location of the ID label which contains the model number, machine type, and serial number of the server.

© Copyright Lenovo 2024, 2025

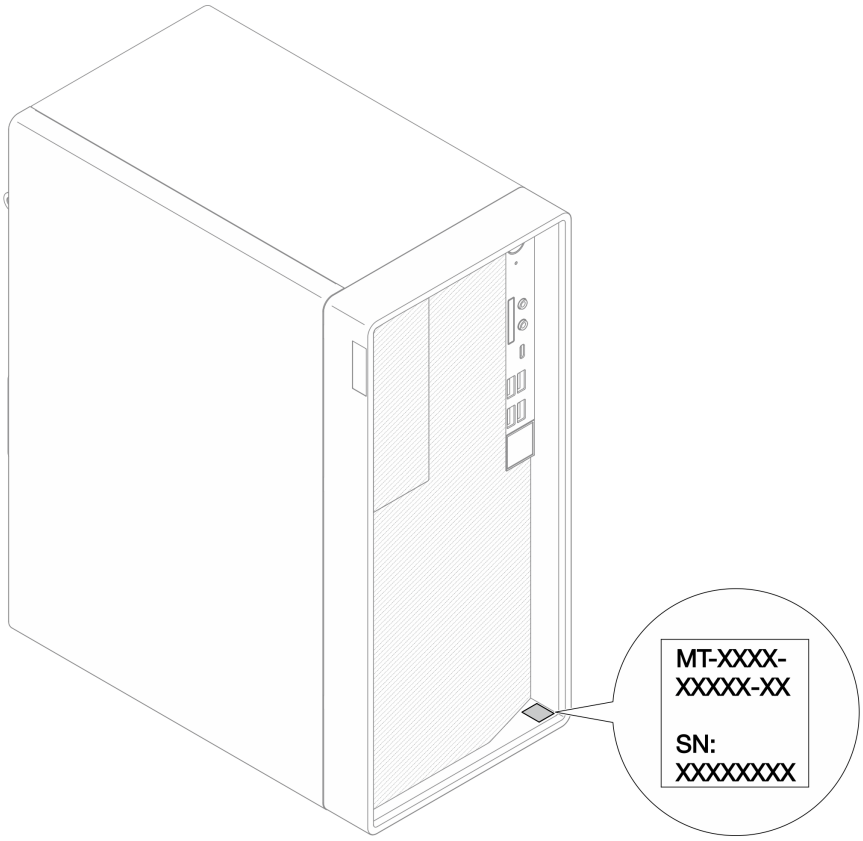

Figure 10. Location of the ID label

Service information QR code

On the inside surface of the tray cover, there is a quick response (QR) code that provides mobile access to service information. You can scan the QR code using a QR code reader application on a mobile device to get quick access to the Service Information web page. The Service Information web page provides additional information for parts installation and replacement videos, and error codes for solution support.

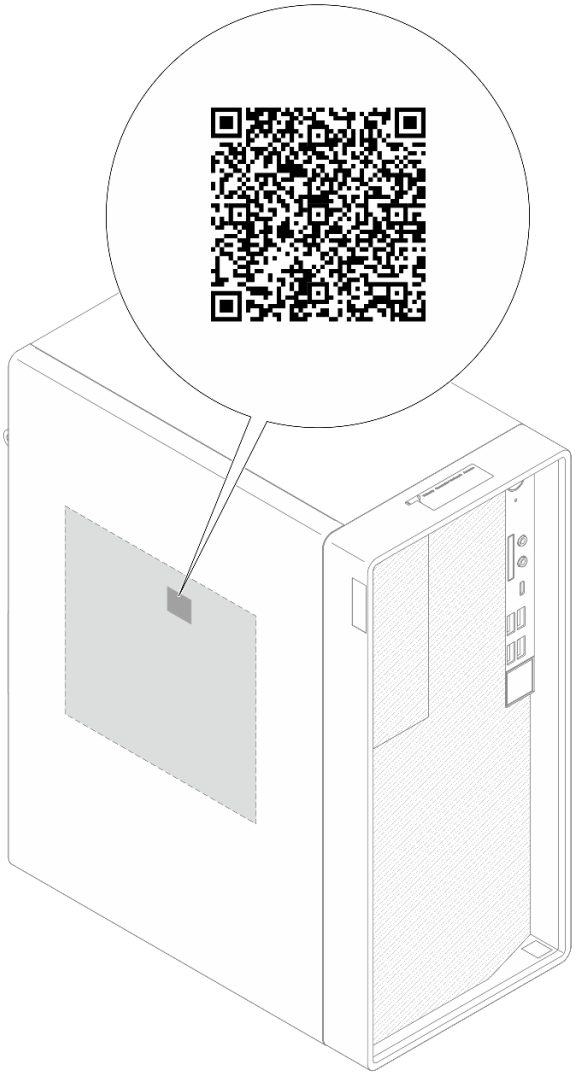

Figure 11. Service information QR code

COA label

The Certificate of Authenticity (COA) label, which is located on the top surface of the server, provides the name of the product it certifies and a certificate number, product key or serial number for the product.

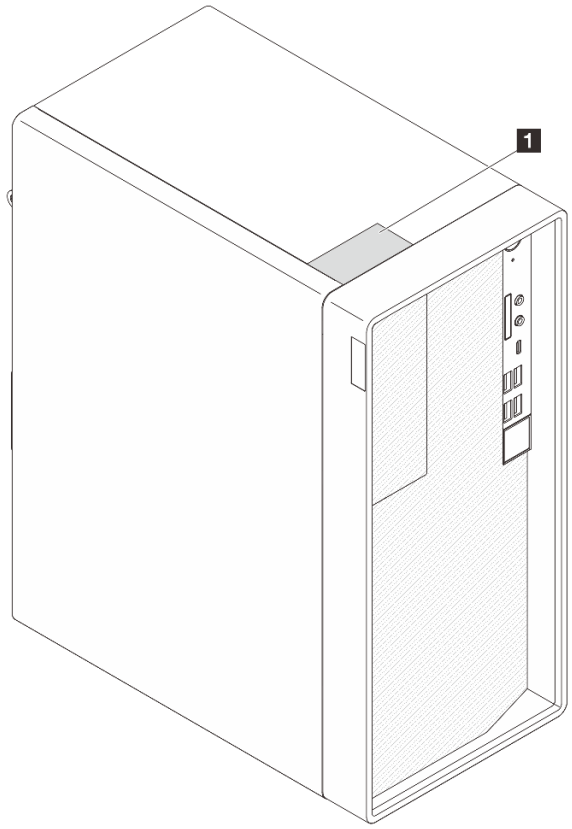

Figure 12. COA label

Server setup checklist

Use the server setup checklist to ensure that you have performed all tasks that are required to set up your server.

The server setup procedure varies depending on the configuration of the server when it was delivered. In some cases, the server is fully configured and you just need to connect the server to the network and an AC power source, and then you can power on the server. In other cases, the server needs to have hardware options installed, requires hardware and firmware configuration, and requires an operating system to be installed.

The following steps describe the general procedure for setting up a server.

Setup the server hardware

Complete the following procedures to setup the server hardware.

1. Unpack the server package. See “Server package contents” on page 23.
2. Install any required hardware or server options. See the related topics in “Hardware replacement procedures” in *User Guide* or *Hardware Maintenance Guide*.
3. If necessary, install the server into a standard rack cabinet by using the tower-to-rack conversion kit. See the documentation that comes with the optional conversion kit.
4. Connect all external cables to the server. See Chapter 2 “Server components” on page 11 for connectors locations.

   Typically, you will need to connect the following cables:

- Connect the server to the power source.
- Connect the server to the network.
- Connect the server to the storage device.

5. Power on the server.

   Power button location and power LED are specified in “Front view” on page 11.

   The server can be turned on (power LED on) in any of the following ways:

   - Press the power button.
   - The server can restart automatically after a power interruption.

6. Validate the server. Make sure that the power LED, drive activity LED, and Ethernet connector LED are lit properly.

   See “Front view” on page 11 and “Rear view” on page 12 for more information on the LED indications.

Configure the system

Complete the following procedures to configure the system. For detailed instructions, see Chapter 5 “System configuration” on page 29.

1. Update the firmware for the server if necessary.
2. Configure the firmware for the server.

   The following information is available for RAID configuration:

   - https://lenovopress.lenovo.com/lp0578-lenovo-raid-introduction
   - https://lenovopress.lenovo.com/lp0579-lenovo-raid-management-tools-and-resources

3. Install the operating system.
4. Install the applications and programs for which the server is intended to be used.

Chapter 5. System configuration

Complete these procedures to configure your system.

Note: Some Lenovo system management applications, including Lenovo XClarity Controller, Lenovo XCC Logger Utility, Lenovo XClarity Administrator, Lenovo XClarity Integrator, and Lenovo XClarity Energy Manager, are not supported by ST45 V3.

Update the firmware

Go to Lenovo Datacenter Support site for the latest firmware update package.

To update the firmware from a flash device, complete the following steps:

1. Go to https://datacentersupport.lenovo.com/products/servers/thinksystem/st45v3/downloads/driver-list/. All the downloadable firmware packages for ST45 V3 are available on this site.
2. Download the latest version of firmware update packages.
3. Follow Lenovo XClarity Essentials Bootable Media Creator (BoMC) and Lenovo XClarity Provisioning Manager Lite (LXPM Lite) instructions to update the firmware.

Notes:
- BoMC can support all system firmware except HDD. For details, see https://pubs.lenovo.com/lxce-bomc/.
- LXPM Lite only supports UEFI firmware update. For details, see https://pubs.lenovo.com/lxpm-lite/.

Configure the firmware

Read this section to learn about how to set up the firmware for the server.

Starting the Setup Utility program

Follow this procedure to start the Setup Utility program.

To start the Setup Utility program, complete the following steps:

Step 1. Power on or restart the server.

Step 2. Before the operating system starts up, repeatedly press and release **F1**. It will lead to the text-based BIOS interface.

Note: If a BIOS password has been set, the Setup Utility program will not open until you enter the correct password.

Enabling or disabling a device

This section provides information about how to enable or disable hardware devices, such as USB connectors or storage drives.

To enable or disable a device, complete the following steps:

Step 1. Start the Setup Utility program. See “Starting the Setup Utility program” on page 29.

Step 2. Select **Devices**.

Step 3. Select the device to enable or disable, and press **Enter**.

© Copyright Lenovo 2024, 2025

Step 4. Select the desired setting, and press **Enter**.

Step 5. To save settings and exit the Setup Utility program, press **F10**; then, select **Yes** in the displayed window, and press **Enter**.

Enabling or disabling the automatic power-on

Automatic Power On in Setup Utility program provides various power-on options.

To enable or disable Automatic Power On, complete the following steps:

Step 1. Start the Setup Utility program. See "Starting the Setup Utility program" on page 29.

Step 2. Select **Power**.

Step 3. Select **After Power Loss**.

Step 4. Select the desired option from **Power On**, **Power Off**, and **Last State**; then press **Enter**.

Step 5. To save settings and exit the Setup Utility program, press **F10**; then, select **Yes** in the displayed window, and press **Enter**.

Using passwords

Passwords can be set to prevent unauthorized access to the server.

Despite passwords enhance data security, they are not required. Read the following topics if you decide to set any passwords.

To start the Setup Utility program, complete the following steps:

Password Types

The following types of passwords are available in the Setup Utility program:

- Power-on password

  When a power-on password is set, you are prompted to enter a valid password each time the server is turned on. The server cannot be used until the valid password is entered.

- Administrator password

  Setting an administrator password deters unauthorized users from changing configuration settings. If you are responsible for maintaining the configuration settings of several servers, you might want to set an administrator password.

  When an administrator password is set, you are prompted to enter a valid password each time you try to access the Setup Utility program. The Setup Utility program cannot be accessed until a valid password is entered.

  If both the power-on password and administrator password are set, you can enter either password. However, you must use your administrator password to change any configuration settings.

Password considerations

A password can be any combination of up to 20 alphabetic and numeric characters. For security reasons, it is recommended to use a strong password that cannot be easily compromised.

Note: The Setup Utility program passwords are case-sensitive.

To set a strong password, consider the following guidelines:

- Have at least eight characters in length
- Contain at least one alphabetic character and one numeric character
- Not be your name or your user name
- Not be a common word or a common name
- Be significantly different from your previous passwords

Setting, changing, or deleting a password

To set, change, or delete a password, complete the following steps:

Step 1. Start the Setup Utility program. See “Starting the Setup Utility program” on page 29.

Step 2. Select **Security**.

Step 3. Depending on the password type, select **Set Supervisor Password** and press **Enter**.

Step 4. Follow the instructions on the right side of the screen to set, change, or delete a password.

Note: A password can be any combination of up to 20 alphabetic and numeric characters. For more information, see Password considerations.

Step 5. To save settings and exit the Setup Utility program, press **F10**; then, select **Yes** in the displayed window, and press **Enter**.

Note: When **Flash Authority** is set to **Disable**, the system will not validate the administrator password during a reboot initiated by a UEFI update.

Erasing lost or forgotten passwords (clearing CMOS)

To erase a lost or forgotten password, complete the following steps:

Step 1. Remove any media from the drives and turn off all connected devices and the server; then, disconnect all power cords from electrical outlets and disconnect all cables that are connected to the server.

Step 2. Remove the server cover. See “Remove the server cover” in *User Guide* or *Hardware Maintenance Guide*.

Step 3. Remove the CMOS battery (CR2032). See “Remove the CMOS battery (CR2032)” in *User Guide* or *Hardware Maintenance Guide*.

Step 4. Wait for 10 to 15 seconds; then, reinstall the CMOS battery (CR2032). See “Install the CMOS battery (CR2032)” in *User Guide* or *Hardware Maintenance Guide*.

Step 5. Reinstall the server cover and reconnect the power cord. See “Install the server cover” in *User Guide* or *Hardware Maintenance Guide*.

Step 6. Turn on the server. Before the operating system starts up, press **F1** to enter the Setup Utility.

Step 7. In Setup Utility, make sure the date, time, and other settings are correct.

Step 8. To save settings and exit the Setup Utility program, press **F10**; then, select **Yes** in the displayed window, and press **Enter**.

Selecting a startup device

If the server does not start up from the expected device, you can either change the startup device sequence or select a temporary startup device.

Changing the startup device sequence permanently

To change the startup device sequence permanently, complete the following steps:

Step 1. Depending on the type of the storage device, do one of the following:

- If the storage device is internal, skip to Step 2 on page 32.
- If the storage device is a disc, ensure that your server is turned on. Then, insert the disc into the optical drive.
- If the storage device is an external device other than a disc, connect the storage device to the server.

Step 2. Start the Setup Utility program. See "Starting the Setup Utility program" on page 29.

Step 3. Select **Startup → FIXED BOOT ORDER Priorities**.

Step 4. Follow the instructions on the right side of the screen to change the startup device sequence.

Step 5. To save settings and exit the Setup Utility program, press **F10**; then, select **Yes** in the displayed window, and press **Enter**.

Selecting a temporary startup device

Note: Not all discs and storage drives are applicable as startup device.

To select a temporary startup device, complete the following steps:

Step 1. Depending on the type of the storage device, do one of the following:

- If the storage device is internal, skip to Step 2 on page 32.
- If the storage device is a disc, ensure that your server is turned on. Then, insert the disc into the optical drive.
- If the storage device is an external device other than a disc, connect the storage device to the server.

Step 2. Turn on or restart the server. Before the operating system starts up, repeatedly press and release **F12** until Startup Device Menu is displayed.

Step 3. Select the desired storage device and press **Enter**. The server will start up from the selected device.

Exiting the Setup Utility program

Follow this procedure to exit the Setup Utility program.

To exit the Setup Utility program, do one the following steps:

- To save the new settings, press **F10**; then, select **Yes** in the displayed window, and press **Enter**.
- If you do not want to save the new settings, select **Exit → Discard Changes and Reset** and press **Enter**; then, select **Yes** in the displayed window, and press **Enter**.

Memory configuration

Memory performance depends on several variables, such as memory mode, memory speed, memory ranks, memory population and processor.

More information about optimizing memory performance and configuring memory is available at the Lenovo Press website:

https://lenovopress.lenovo.com/servers/options/memory

In addition, you can take advantage of a memory configurator, which is available at the following site:

https://dcsc.lenovo.com/#/memory_configuration

For specific information about the required installation order of memory modules in your server based on the system configuration and memory mode that you are implementing, see “Memory module installation rules and order” in *User Guide* or *Hardware Maintenance Guide*.

RAID configuration

Using a Redundant Array of Independent Disks (RAID) to store data remains one of the most common and cost-efficient methods to increase server's storage performance, availability, and capacity.

RAID increases performance by allowing multiple drives to process I/O requests simultaneously. RAID can also prevent data loss in case of a drive failure by reconstructing (or rebuilding) the missing data from the failed drive using the data from the remaining drives.

RAID array (also known as RAID drive group) is a group of multiple physical drives that uses a certain common method to distribute data across the drives. A virtual drive (also known as virtual disk or logical drive) is a partition in the drive group that is made up of contiguous data segments on the drives. Virtual drive is presented up to the host operating system as a physical disk that can be partitioned to create OS logical drives or volumes.

An introduction to RAID is available at the following Lenovo Press website:

https://lenovopress.lenovo.com/lp0578-lenovo-raid-introduction

Detailed information about RAID management tools and resources is available at the following Lenovo Press website:

https://lenovopress.lenovo.com/lp0579-lenovo-raid-management-tools-and-resources

AMD SW RAID driver installation guidelines are available at the following website:

https://download.lenovo.com/servers_pdf/amd_sw_raid_driver_installation.pdf

Enabling AMD RAIDXpert2

Before setting up RAID for SATA drives, follow the below steps to enable AMD RAIDXpert2:

1. Restart the system. Before the operating system starts up, press **F1** to enter the Setup Utility.
2. Go to **Devices → ATA Drive setup → SATA Mode**, and select **RAID**.
3. Save the changes and reboot the system.

AMD RAIDXpert2 configurations

AMD offers various RAIDXpert2 configurations with different RAID levels and SSD support. See the following for more details.

Note: Supported RAID levels vary by model. For the RAID levels supported by ST45 V3, see “Technical specifications” on page 3.

AMD RAIDXpert2 **configurations for SATA**	**Requirements**
AMD RAIDXpert2	• Supports RAID levels 0 and 1.

Monitor RAID status

Users can monitor the RAID status in the following ways:

- Use the RAIDXpert2 GUI utility provided by AMD software raid (SWR) to monitor and manage the RAID volumes.
- Use AMD SWR HII (RAIDXpert2 in UEFI HII) to monitor and manage the RAID volumes.
- Use the `rcadm --manage --query-all` or `rcadm -M -qa` command to monitor the physical disk status and virtual disk (VD) status.
- When the RAID is in **Critical** state, the dmesg log records an event such as "**Array X has gone critical**".

Restore (Rebuild) arrays

With the Restore task, a redundant-type array whose state has changed to **Critical** can be restored (rebuilt) in one of the following two ways:

- by assigning a dedicated spare to the array
- by creating a global spare or using an existing global spare (An existing global spare automatically starts restoring a redundant-type array after the state of the array changes to **Critical**.)

When a single disk in a non-redundant array fails, the array state changes to **Offline**. An array in an **Offline** state cannot be restored. This means that non-redundant arrays (Volume, RAID0) cannot be restored.

Note: If a **Critical** redundant array that is being restored loses a second disk (RAID1), or loses a second disk in the same mirror set (RAID10), the Restore task fails. The array must be re-created from backup storage data.

Users can assign a hot spare using RAIDXpert2 GUI utility, AMD SWR HII (RAIDXpert2 in UEFI HII), or the `rcadm` command.

Assigning a hot spare using RAIDXpert2 GUI utility

1. In the **Array View** section, select the **Critical** array.
2. At the **Disk List** section, double-click on a disk.
3. At the **Disk** menu, select **Options**. Options for **Disk Device** displays in the **Disk List** panel.
4. Perform one of the following actions:
   - To use the disk as a dedicated spare, select **Assign as Dedicated Spare**.
   - To use the disk as a global spare, select **Assign as Global Spare**.
5. Click **Confirm**.

Adding a hot spare using AMD SWR HII (RAIDXpert2 in UEFI HII)

To assign global spares, do as follows:

1. From the main menu of RaidXpert2 Configuration Utility, use the arrow keys to select **Physical Disk Management**, and then press **Enter**.
2. Select **Physical Disk Operations** using the arrow keys, and then press **Enter**.
3. Select **Select Physical Disk** using the arrow keys, and then press **Enter**.
4. Select **Assign Global Hot Spare** using the arrow keys, and then press **Enter**.
5. Review the warning message. If you want to proceed, use the arrow keys to select **Yes**, or press **ESC** or **No**, to exit.

To assign dedicated spares, do as follows:

Note: Dedicated spares can only be assigned to redundant arrays and must be the same size or larger than the other members of the redundant array.

1. From the main menu of RaidXpert2 Configuration Utility, use the arrow keys to select **Array Management**, and then press **Enter**.
2. Select **Manage Array Properties** using the arrow keys, and then press **Enter**.
3. Select **Select Array** using the arrow keys, select the desired array (must be a redundant array) from the drop-down menu, and then press **Enter**.
4. Select **Manage Dedicated Hot Spares** using the arrow keys, and then press **Enter**.
5. Select the disks to assign as dedicated spares.
   a. Select the disk using the arrow keys to highlight the disk and press the space bar or **Enter** to select it.
   b. Select **Add Hot Spare Physical Disk** using the arrow keys, and then press **Enter**.
   c. At the warning message, press the space bar or **Enter** to confirm.
   d. Select **Yes** using the arrow keys, and then press **Enter** or **ESC** to exit adding the dedicated spare.

Using the `rcadm` command to assign a hot spare

For example, use the following command to add disk 1 as a global hot spare:

```
rcadm --manage --add-global-spare --disk 1
```

Note: Use the `rcadm -?` or `rcadm --help` command to find more usage about the `rcadm` command line tool.

Deploy the operating system

Tool-based deployment

- **Single-server**
  - Lenovo XClarity Provisioning Manager Lite

    https://pubs.lenovo.com/lxpm-lite/os_installation

    Note: LXPM Lite does not support OS installation when the onboard RAID mode is enabled for the system.

Manual deployment

If you cannot access the above tools, follow the instructions below, download the corresponding *OS Installation Guide*, and deploy the operating system manually by referring to the guide.

1. Go to https://datacentersupport.lenovo.com/solutions/server-os.
2. Select an operating system from the navigation pane and click **Resources**.
3. Locate the “OS Install Guides” area and click the installation instructions. Then, follow the instructions to complete the operation system deployment task.

Back up the server configuration

After setting up the server or making changes to the configuration, it is a good practice to make a complete backup of the server configuration.

Use your backup methods to back up the operating system and user data for the server.

Appendix A. Getting help and technical assistance

If you need help, service, or technical assistance or just want more information about Lenovo products, you will find a wide variety of sources available from Lenovo to assist you.

On the World Wide Web, up-to-date information about Lenovo systems, optional devices, services, and support are available at:

http://datacentersupport.lenovo.com

Note: IBM is Lenovo's preferred service provider for ThinkSystem.

Before you call

Before you call, there are several steps that you can take to try and solve the problem yourself. If you decide that you do need to call for assistance, gather the information that will be needed by the service technician to more quickly resolve your problem.

Attempt to resolve the problem yourself

You can solve many problems without outside assistance by following the troubleshooting procedures that Lenovo provides in the online help or in the Lenovo product documentation. The online help also describes the diagnostic tests that you can perform. The documentation for most systems, operating systems, and programs contains troubleshooting procedures and explanations of error messages and error codes. If you suspect a software problem, see the documentation for the operating system or program.

You can find the product documentation for your ThinkSystem products at the following location:

https://pubs.lenovo.com/

You can take these steps to try to solve the problem yourself:

- Check all cables to make sure that they are connected.
- Check the power switches to make sure that the system and any optional devices are turned on.
- Check for updated software, firmware, and operating-system device drivers for your Lenovo product. (See the following links) The Lenovo Warranty terms and conditions state that you, the owner of the Lenovo product, are responsible for maintaining and updating all software and firmware for the product (unless it is covered by an additional maintenance contract). Your service technician will request that you upgrade your software and firmware if the problem has a documented solution within a software upgrade.
  - Drivers and software downloads
    - https://datacentersupport.lenovo.com/products/servers/thinksystem/st45v3/downloads/driver-list/
  - Operating system support center
    - https://datacentersupport.lenovo.com/solutions/server-os
  - Operating system installing instructions
    - https://pubs.lenovo.com/thinksystem#os-installation
- If you have installed new hardware or software in your environment, check https://serverproven.lenovo.com to make sure that the hardware and software are supported by your product.
- Refer to “Problem Determination” in *User Guide* or *Hardware Maintenance Guide* for instructions on isolating and solving issues.

© Copyright Lenovo 2024, 2025

- Go to http://datacentersupport.lenovo.com and check for information to help you solve the problem.

  To find the Tech Tips available for your server:

  1. Go to http://datacentersupport.lenovo.com and navigate to the support page for your server.
  2. Click on **How To's** from the navigation pane.
  3. Click **Article Type → Solution** from the drop-down menu.

     Follow the on-screen instructions to choose the category for the problem that you are having.
- Check Lenovo Data Center Forum at https://forums.lenovo.com/t5/Datacenter-Systems/ct-p/sv_eg to see if someone else has encountered a similar problem.

Gathering information needed to call Support

If you require warranty service for your Lenovo product, the service technicians will be able to assist you more efficiently if you prepare the appropriate information before you call. You can also go to http://datacentersupport.lenovo.com/warrantylookup for more information about your product warranty.

Gather the following information to provide to the service technician. This data will help the service technician quickly provide a solution to your problem and ensure that you receive the level of service for which you might have contracted.

- Hardware and Software Maintenance agreement contract numbers, if applicable
- Machine type number (Lenovo 4-digit machine identifier). Machine type number can be found on the ID label, see "Identify the server" on page 23.
- Model number
- Serial number
- Current system UEFI and firmware levels
- Other pertinent information such as error messages and logs

As an alternative to calling Lenovo Support, you can go to https://support.lenovo.com/servicerequest to submit an Electronic Service Request. Submitting an Electronic Service Request will start the process of determining a solution to your problem by making the pertinent information available to the service technicians. The Lenovo service technicians can start working on your solution as soon as you have completed and submitted an Electronic Service Request.

Contacting Support

You can contact Support to obtain help for your issue.

You can receive hardware service through a Lenovo Authorized Service Provider. To locate a service provider authorized by Lenovo to provide warranty service, go to https://datacentersupport.lenovo.com/serviceprovider and use filter searching for different countries. For Lenovo support telephone numbers, see https://datacentersupport.lenovo.com/supportphonelist for your region support details.

Appendix B. Documents and supports

This section provides handy documents, driver and firmware downloads, and support resources.

Documents download

This section provides introduction and download link for handy documents.

Documents

Download the following product documentations at:

https://pubs.lenovo.com/st45-v3/pdf_files.html

- ***User Guide***
  - ***Rail Installation Guides***
    - Rail installation in a rack
  - Complete overview, system configuration, hardware components replacing, and troubleshooting.

    Selected chapters from *User Guide*:
    - ***System Configuration Guide*** **:** Server overview, components identification, system LEDs and diagnostics display, product unboxing, setting up and configuring the server.
    - ***Hardware Maintenance Guide*** **:** Installing hardware components, cable routing, and troubleshooting.

Support websites

This section provides driver and firmware downloads and support resources.

Support and downloads

- Drivers and Software download website for ThinkSystem ST45 V3
  - https://datacentersupport.lenovo.com/products/servers/thinksystem/st45v3/downloads/driver-list/
- Lenovo Data Center Forum
  - https://forums.lenovo.com/t5/Datacenter-Systems/ct-p/sv_eg
- Lenovo Data Center Support for ThinkSystem ST45 V3
  - https://datacentersupport.lenovo.com/products/servers/thinksystem/st45v3
- Lenovo License Information Documents
  - https://datacentersupport.lenovo.com/documents/lnvo-eula
- Lenovo Press website (Product Guides/Datasheets/White papers)
  - https://lenovopress.lenovo.com/
- Lenovo Privacy Statement
  - https://www.lenovo.com/privacy
- Lenovo Product Security Advisories
  - https://datacentersupport.lenovo.com/product_security/home
- Lenovo Product Warranty Plans

© Copyright Lenovo 2024, 2025

  - http://datacentersupport.lenovo.com/warrantylookup
- Lenovo Server Operating Systems Support Center website
  - https://datacentersupport.lenovo.com/solutions/server-os
- Lenovo ServerProven website (Options compatibility lookup)
  - https://serverproven.lenovo.com
- Operating System Installation Instructions
  - https://pubs.lenovo.com/thinksystem#os-installation
- Submit an eTicket (service request)
  - https://support.lenovo.com/servicerequest
- Subscribe to Lenovo Data Center Group product notifications (Stay up to date on firmware updates)
  - https://datacentersupport.lenovo.com/solutions/ht509500

Appendix C. Notices

Lenovo may not offer the products, services, or features discussed in this document in all countries. Consult your local Lenovo representative for information on the products and services currently available in your area.

Any reference to a Lenovo product, program, or service is not intended to state or imply that only that Lenovo product, program, or service may be used. Any functionally equivalent product, program, or service that does not infringe any Lenovo intellectual property right may be used instead. However, it is the user's responsibility to evaluate and verify the operation of any other product, program, or service.

Lenovo may have patents or pending patent applications covering subject matter described in this document. The furnishing of this document is not an offer and does not provide a license under any patents or patent applications. You can send inquiries in writing to the following:

Lenovo (United States), Inc.
8001 Development Drive
Morrisville, NC 27560
U.S.A.
Attention: Lenovo Director of Licensing

LENOVO PROVIDES THIS PUBLICATION “AS IS” WITHOUT WARRANTY OF ANY KIND, EITHER EXPRESS OR IMPLIED, INCLUDING, BUT NOT LIMITED TO, THE IMPLIED WARRANTIES OF NON-INFRINGEMENT, MERCHANTABILITY OR FITNESS FOR A PARTICULAR PURPOSE. Some jurisdictions do not allow disclaimer of express or implied warranties in certain transactions, therefore, this statement may not apply to you.

This information could include technical inaccuracies or typographical errors. Changes are periodically made to the information herein; these changes will be incorporated in new editions of the publication. Lenovo may make improvements and/or changes in the product(s) and/or the program(s) described in this publication at any time without notice.

The products described in this document are not intended for use in implantation or other life support applications where malfunction may result in injury or death to persons. The information contained in this document does not affect or change Lenovo product specifications or warranties. Nothing in this document shall operate as an express or implied license or indemnity under the intellectual property rights of Lenovo or third parties. All information contained in this document was obtained in specific environments and is presented as an illustration. The result obtained in other operating environments may vary.

Lenovo may use or distribute any of the information you supply in any way it believes appropriate without incurring any obligation to you.

Any references in this publication to non-Lenovo Web sites are provided for convenience only and do not in any manner serve as an endorsement of those Web sites. The materials at those Web sites are not part of the materials for this Lenovo product, and use of those Web sites is at your own risk.

Any performance data contained herein was determined in a controlled environment. Therefore, the result obtained in other operating environments may vary significantly. Some measurements may have been made on development-level systems and there is no guarantee that these measurements will be the same on generally available systems. Furthermore, some measurements may have been estimated through extrapolation. Actual results may vary. Users of this document should verify the applicable data for their specific environment.

© Copyright Lenovo 2024, 2025

Trademarks

LENOVO, THINKSYSTEM, Flex System, System x, NeXtScale System, xArchitecture, ThinkEdge, and Neptune are trademarks of Lenovo.

Intel and Intel Xeon are trademarks of Intel Corporation in the United States, other countries, or both.

Internet Explorer, Microsoft, and Windows are trademarks of the Microsoft group of companies.

Linux is a registered trademark of Linus Torvalds.

All other trademarks are the property of their respective owners. © 2018 Lenovo.

Important notes

Processor speed indicates the internal clock speed of the processor; other factors also affect application performance.

CD or DVD drive speed is the variable read rate. Actual speeds vary and are often less than the possible maximum.

When referring to processor storage, real and virtual storage, or channel volume, KB stands for 1 024 bytes, MB stands for 1 048 576 bytes, and GB stands for 1 073 741 824 bytes.

When referring to hard disk drive capacity or communications volume, MB stands for 1 000 000 bytes, and GB stands for 1 000 000 000 bytes. Total user-accessible capacity can vary depending on operating environments.

Maximum internal hard disk drive capacities assume the replacement of any standard hard disk drives and population of all hard-disk-drive bays with the largest currently supported drives that are available from Lenovo.

Maximum memory might require replacement of the standard memory with an optional memory module.

Each solid-state memory cell has an intrinsic, finite number of write cycles that the cell can incur. Therefore, a solid-state device has a maximum number of write cycles that it can be subjected to, expressed as `total bytes written` (TBW). A device that has exceeded this limit might fail to respond to system-generated commands or might be incapable of being written to. Lenovo is not responsible for replacement of a device that has exceeded its maximum guaranteed number of program/erase cycles, as documented in the Official Published Specifications for the device.

Lenovo makes no representations or warranties with respect to non-Lenovo products. Support (if any) for the non-Lenovo products is provided by the third party, not Lenovo.

Some software might differ from its retail version (if available) and might not include user manuals or all program functionality.

Electronic emission notices

When you attach a monitor to the equipment, you must use the designated monitor cable and any interference suppression devices that are supplied with the monitor.

Additional electronic emissions notices are available at:

https://pubs.lenovo.com/important_notices/

Taiwan Region BSMI RoHS declaration

單元 Unit	限用物質及其化學符號 Restricted substances and its chemical symbols					
	鉛Lead (PB)	汞Mercury (Hg)	鎘Cadmium (Cd)	六價鉻 Hexavalent chromium (Cr^{+6})	多溴聯苯 Polybrominated biphenyls (PBB)	多溴二苯醚 Polybrominated diphenyl ethers (PBDE)
機架	○	○	○	○	○	○
外部蓋板	○	○	○	○	○	○
機械組合件	–	○	○	○	○	○
空氣傳動設備	–	○	○	○	○	○
冷卻組合件	–	○	○	○	○	○
內存模組	–	○	○	○	○	○
處理器模組	–	○	○	○	○	○
電纜組合件	–	○	○	○	○	○
電源供應器	–	○	○	○	○	○
儲備設備	–	○	○	○	○	○
印刷電路板	–	○	○	○	○	○

備考1. 〝超出0.1 wt %〞及〝超出0.01 wt %〞係指限用物質之百分比含量超出百分比含量基準值。

Note1 : “exceeding 0.1wt%” and “exceeding 0.01 wt%” indicate that the percentage content of the restricted substance exceeds the reference percentage value of presence condition.

備考2. 〝○〞係指該項限用物質之百分比含量未超出百分比含量基準值。

Note2 : “○”indicates that the percentage content of the restricted substance does not exceed the percentage of reference value of presence.

備考3. 〝-〞係指該項限用物質為排除項目。

Note3 : The “-“ indicates that the restricted substance corresponds to the exemption.

Taiwan Region import and export contact information

Contacts are available for Taiwan Region import and export information.

委製商/進口商名稱: 台灣聯想環球科技股份有限公司
進口商地址: 台北市南港區三重路 66 號 8 樓
進口商電話: 0800-000-702

China Energy Label (CEL)

本产品的中国能效标识加施在服务器产品本体上。
中国能效标识中的配置类型Type 1、Type 2、Type 3分别对应能效等级1、2、3级的产品配置。同一规格型号下产品配置会有所不同。（此描述仅适用于中国能效范围内的产品）