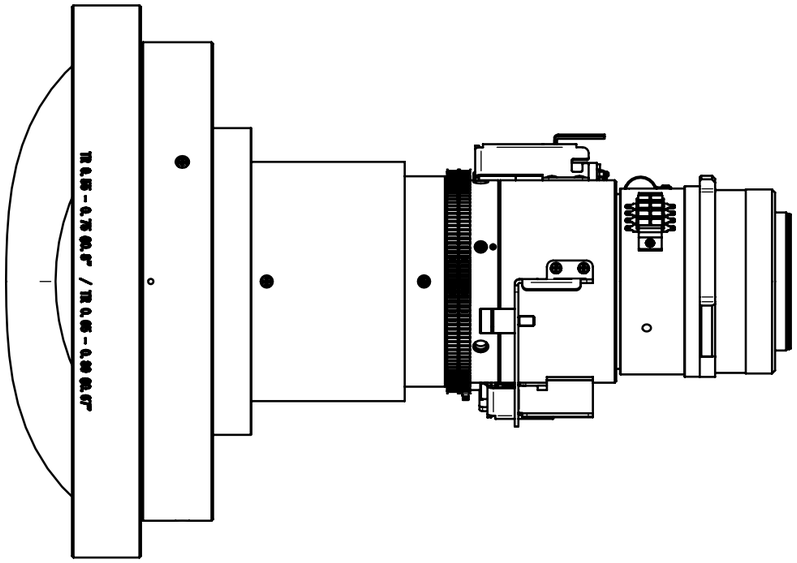

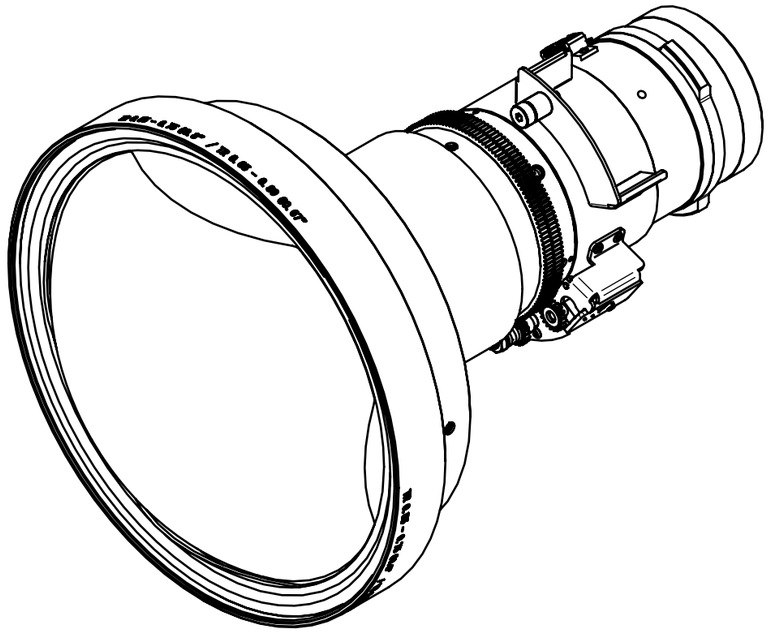

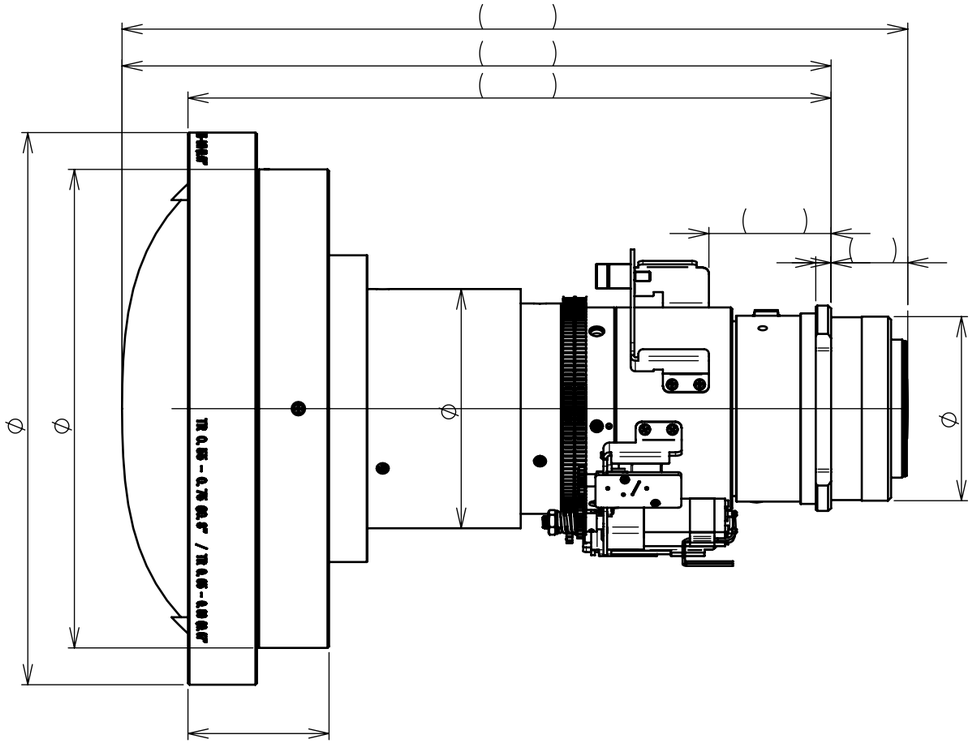

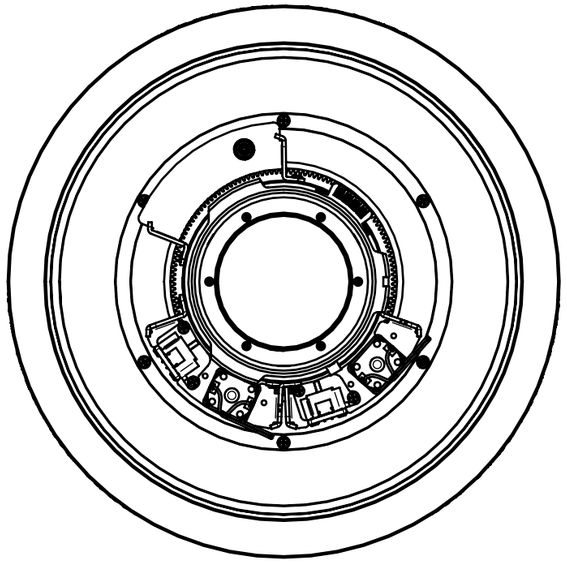

Sharp NEC Displaysolutions, Ltd.	