RB102

Lifecycle Extension Guide

Self-Repair..... 3
Disassembly Procedure..... 4
Electronic Boards Diagrams..... 10
Troubleshooting..... 12
FRU (Field Replaceable Unit) List..... 17
Exploded Diagrams..... 19

Self-Repair

This product offers limited customer self-repair capabilities.

Prior performing self-repair, familiarize yourself with the Safety Guidelines and Recommended Equipment sections first as described in the chapter "Disassembly Procedures".

Due to complexity of circuit boards, electronic components which are embedded to the motherboard or daughterboard(s) are strongly not advised to self-repair.

NOTE:
Before handling components, wear anti-static gloves to avoid damaging them due to static electricity.

NOTE:
For replacement parts, always use only Acer certified components in order to safeguard quality, optimum system performance, stability and reliability of the product.

NOTE:
Any damage to the product that occur during self-repair, or which has occurred as a result of a careless or unsuccessful self-repair attempt, is not covered by the standard product warranty.

Disassembly Procedure

Safety Guidelines

This chapter contains step by step procedures on how to remove and de-install components from the computer. Use the following safety guidelines to ensure your personal safety. Each procedure included in this chapter assumes that you are preparing your computer for recycling and disposal. By performing any of these procedures you acknowledge that any remaining warranty applicable to your computer will be voided if any damage is done to the unit or components during the repair. Before you start any of the procedures in this chapter, make sure to read the following safety guidelines and the respective instructions within the chapter.

CAUTION ！

Turn off your computer and disconnect all power sources before opening the computer cover or panels.

To avoid electrostatic discharge, ground yourself by using a wrist grounding strap or by periodically touching an unpainted metal surface at the same time as touching a connector on the back of the computer.

Take off any metal objects on your arms or fingers such as bracelets, rings or watches and make sure your hands are completely dry. Even if your unit is unplugged, there may still be some remaining electric charge.

If a component does not come out easily, do not forcefully remove it. Instead, check that you are removing it correctly and that no wires or other parts are in the way.

When you disconnect a cable, pull on its connector or on its pull-tab, not on the cable itself. Some cables have connectors with locking tabs; if you are disconnecting this type of cable, press in on the locking tabs before you disconnect the cable.

Recommended Equipment

The following equipment are recommended to do the following maintenance procedures:

- ✦ Wrist grounding strap and conductivemat

- ✢ Flat screwdriver
- ✢ Philips screwdriver
- ✢ Polydrive screwdriver
- ✢ Plastic tweezers
- ✢ Flat plastic pry

WEEE Annex VII Component

These components are classified as requiring selective treatment.

Predisassembly Instructions

Do the following prior to starting any maintenance procedures:
1. Place the system on a stable work surface.
2. Remove AC power cord from the system and peripherals
3. Remove all cables from the system.

Make sure the system is completely powered off.

Top Cover Removal

1. Remove the Top Cover

1.1 Remove the four screws from the bottom shell

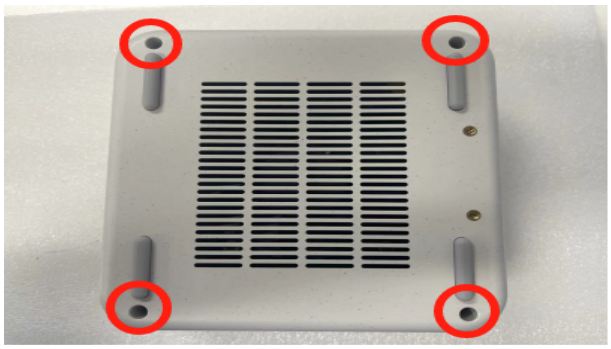

1.2 Remove the top cover from the RJ45 port side by using the structural gap as shown

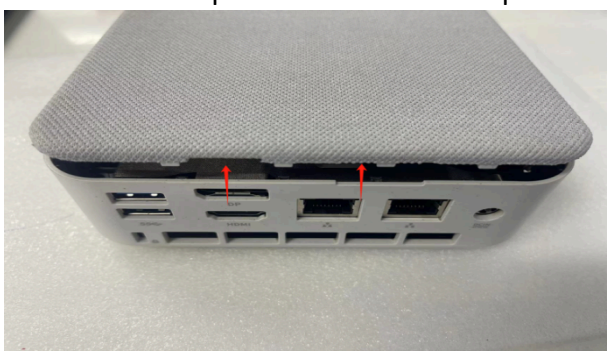

Bracket Fan Removal

2. Remove the Bracket Fan

2.1 Gently lift the bracket fan and unplug the port ,then remove the bracket fan.

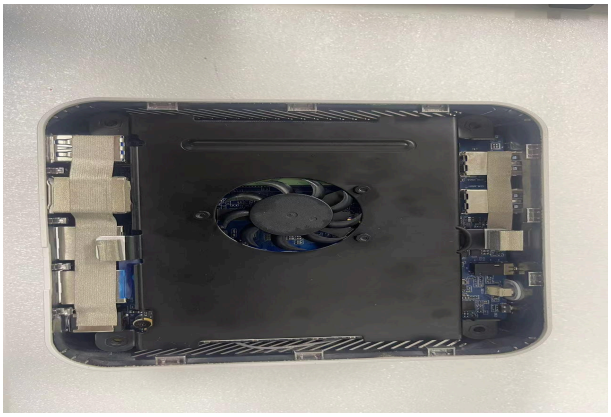
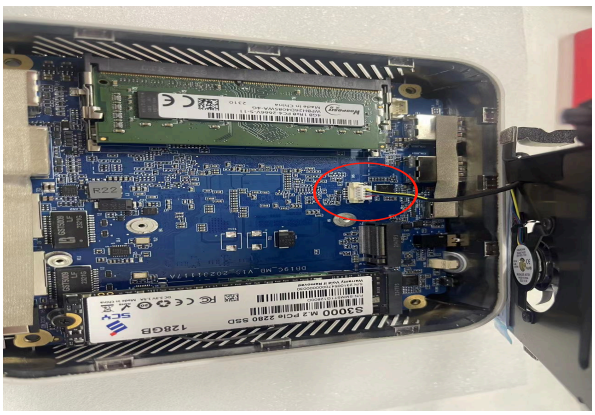

DDR Removal

3. Remove DDR

3.1 Press the arrow direction to open the DDR clip, then remove the DDR according to the angle of the DDR bounce

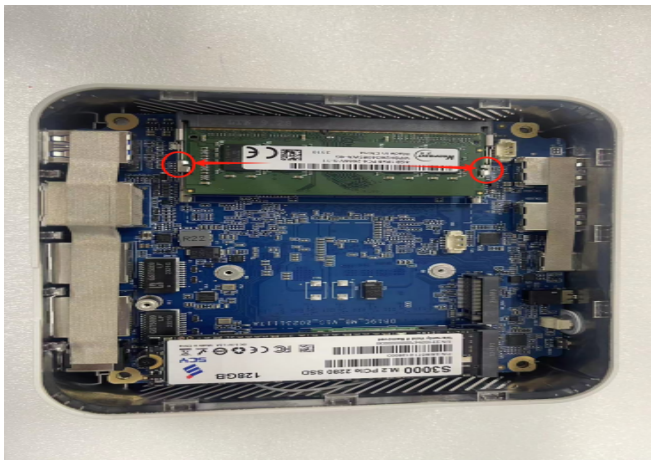


SSD Removal

4. Remove SSD

4.1 Remove the screws holding the SSD , then remove the SSD according to the Angle of the SSD bounce





WLAN MODULE Removal

5. Remove WLAN MODULE

5.1 Remove the transparent PET sheet from the WIFI antenna, then remove the antenna and the screws

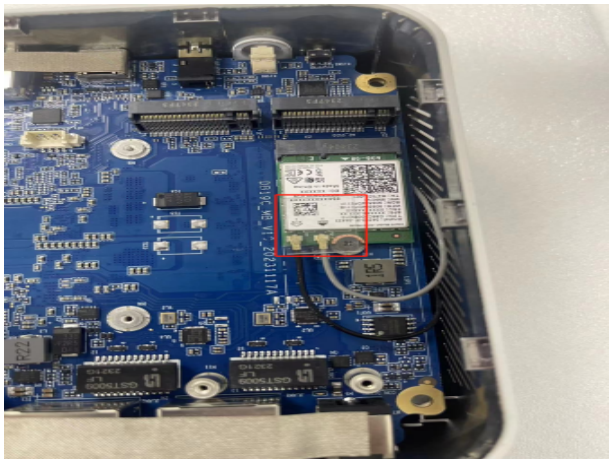



MAIN BOARD Removal

6. Remove MAIN BOARD

6.1 Slowly lift the main board from the RJ45 port to a certain height, and then pull out the port on the other side in the inclined direction

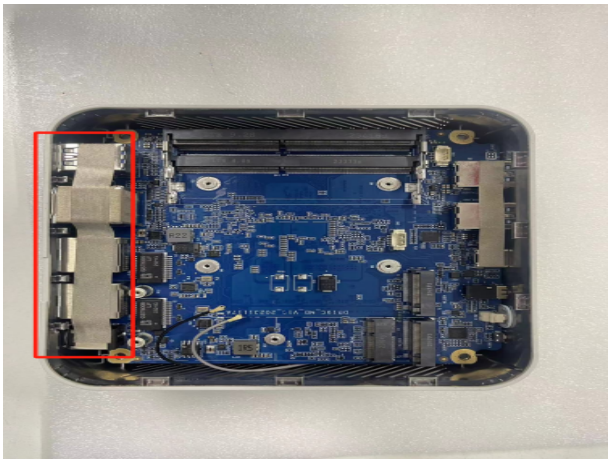

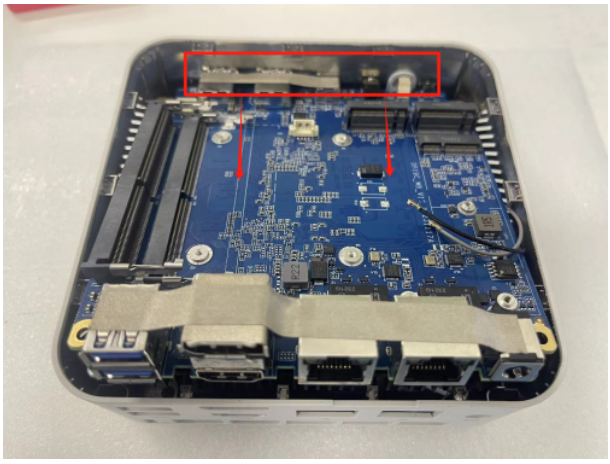

THERMAL MODULE Removal

7. Remove THERMAL MODULE

7.1 Unplug the fan port, and remove the four screws under the fan

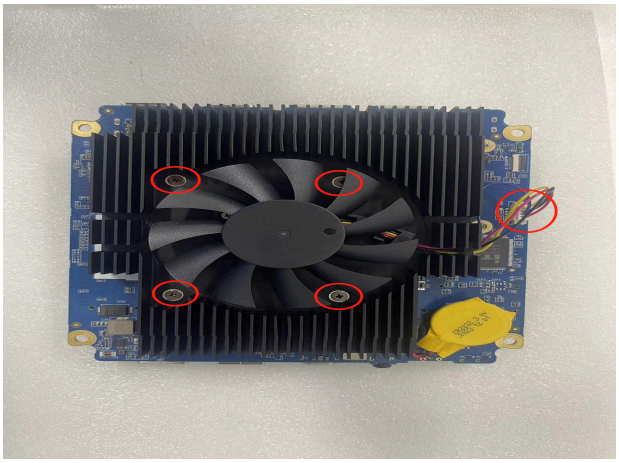

Battery Removal

8. Remove Battery

8.1 Unplug the battery and remove the battery from the tape

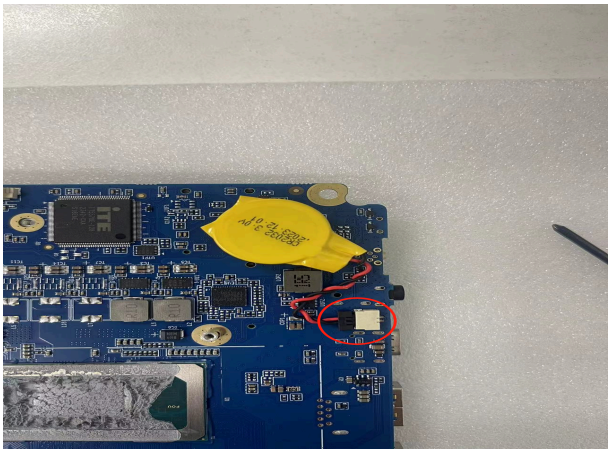

Electronic Boards Diagrams

DNB19 (BOX PC)ADL_N Platform Block Diagram

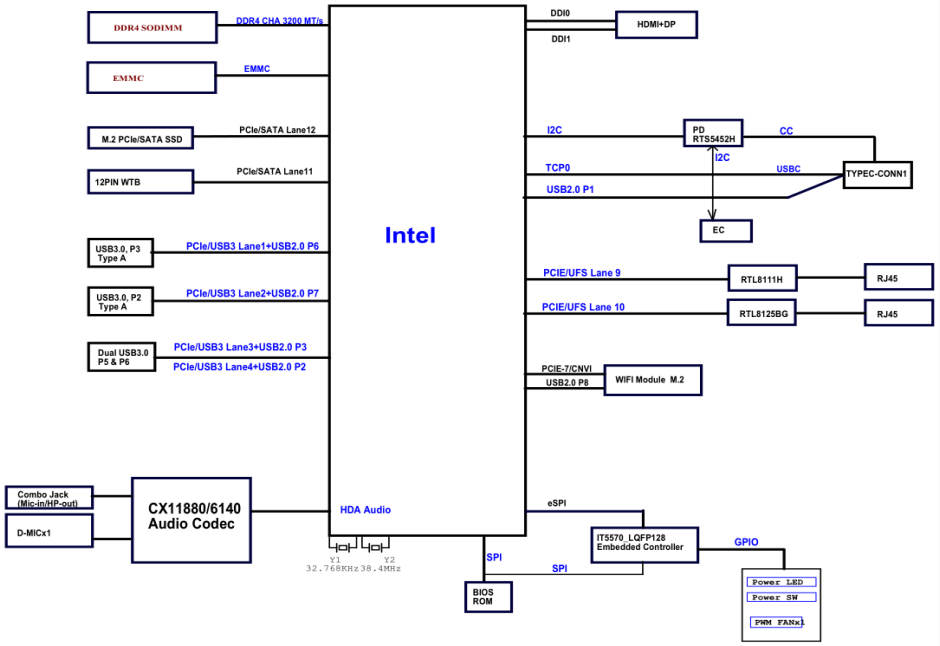

DB19C (BOX PC) Alder Lake P Platform Block Diagram

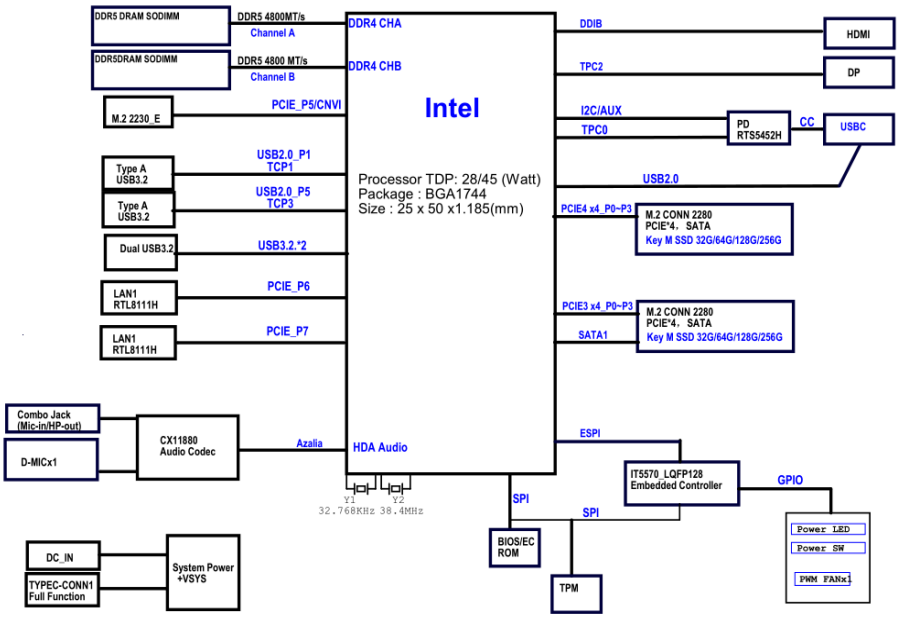

MTB19D Meteor Lake _H Platform Block Diagram

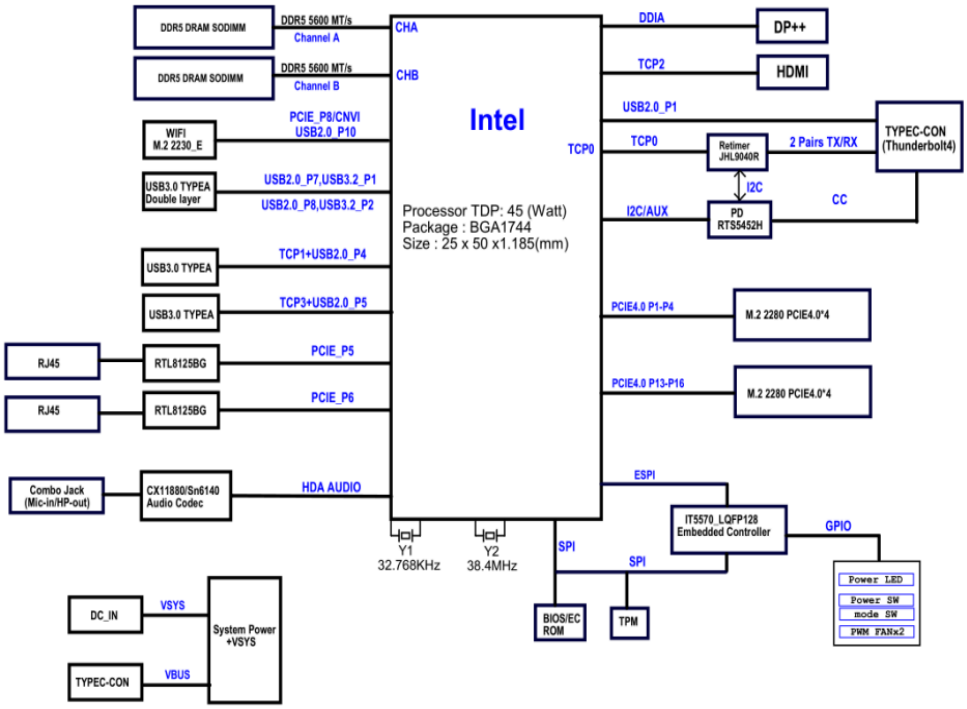

Troubleshooting

Basic Flowchart

The basic flowchart serves as a guide for identifying a possibly faulty FRU.Before going through the diagnostic flowchart steps, verify the following:

- ❑ Ask the user if a password has been registered and, if so, ask him or her to enter the password. If the user has forgotten the system password, please delete or reset the password
- ❑ Make sure Windows® 11 has been installed on the HDD. Any other operating system can cause the computer to malfunction.

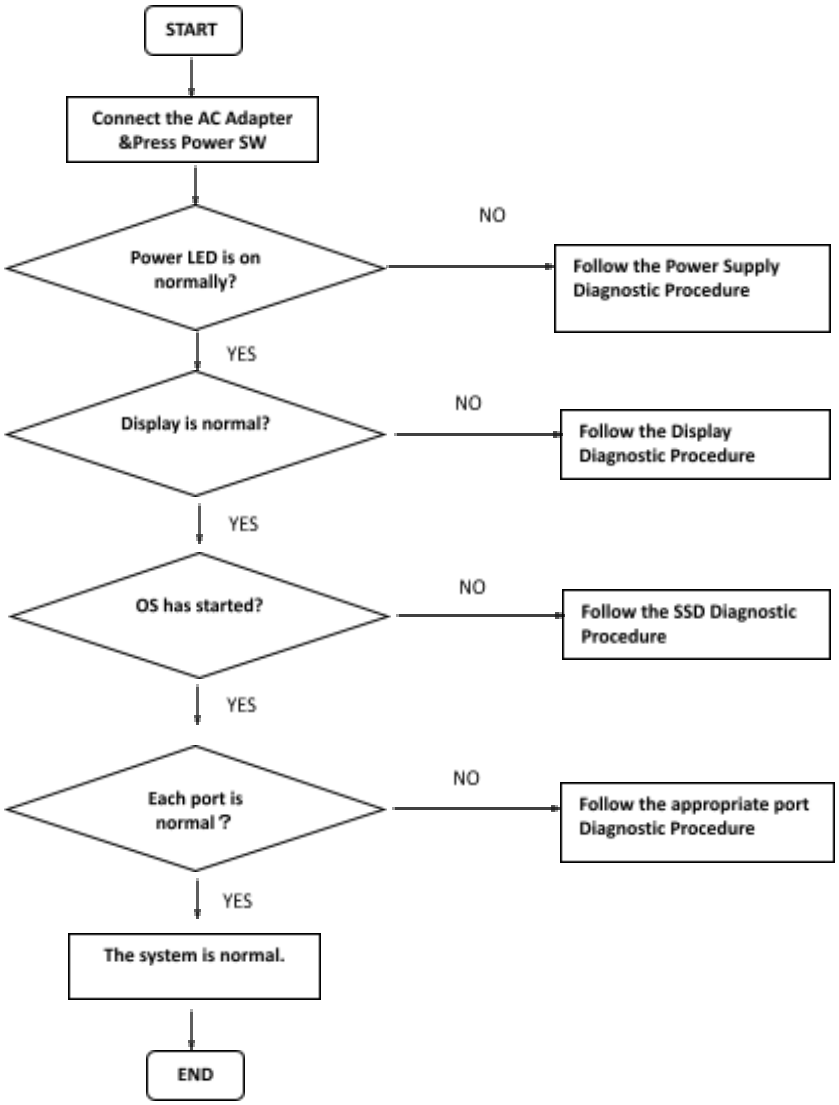

Power Supply

The power supply in the computer controls many functions and components. To check if the power supply is defective or malfunctioning, follow the troubleshooting procedures below as instructed.

Procedure 1: Power LED Check

Check the AC adaptor power indicator is on. (Optional adapters for individual models may not come with indicator light.)

Press the power SW to Turn on your computer and make sure the Power LED color is white. If it does not, go to Procedure 2.

Procedure 2: Connection Check

Power is supplied to the system board as illustrated below:

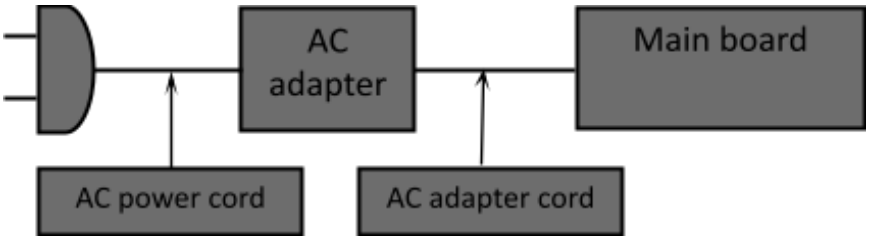

Follow the steps below to check whether each connector has been connected correctly:

Check 1 Make sure the AC adaptor and AC power cord have been firmly plugged into the DC IN socket and wall outlet, respectively. When they have been connected correctly, perform Check 2.

Check 2 Connect a new AC adaptor and AC power cord.

Check 3 Make sure the AC adapter cord is properly attached to your computer. If the Power LED does not light when the AC adapter cord is properly installed, go to Procedure 3.

Procedure 3 Replacement Check

The main board may be defective. Disassemble the computer and replace the main board with a new one.

HDMI \DP Port

If the display is abnormal, follow the troubleshooting procedures below as instructed.

Procedure 1: Connection Check

Ensure that the HDMI\DP cable is properly inserted, and that no foreign body indicator affects the port contact , If the display still has problems ,Go to Procedure 2.

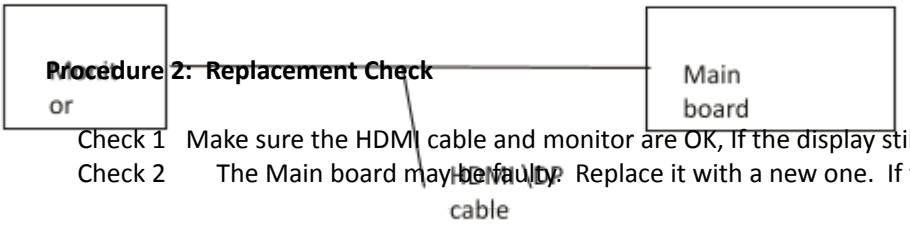

Procedure 2: Replacement Check

Check 1 Make sure the HDMI cable and monitor are OK, If the display still has problems,go to Check 2

Check 2 The Main board may be faulty. Replace it with a new one. If there is still an error, perform Check 1.

SSD\DDR

To check if the SSD\DDR is defective or malfunctioning, follow the troubleshooting procedures below as instructed.

Procedure 1: Connection Check

Disassemble the computer following Disassemble Procedure,remove the SSD\DDR card, clean the gold finger, and make sure that the slot is free of foreign matters, then plug SSD\DDR back in.If the OS still starts abnormally,go to Procedure 2.

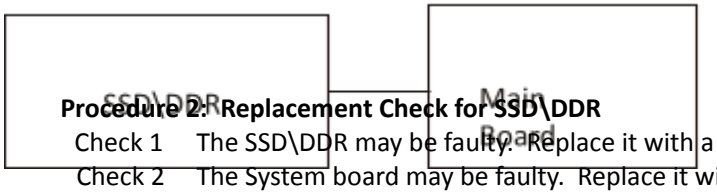

Procedure 2: Replacement Check for SSD\DDR

Check 1 The SSD\DDR may be faulty. Replace it with a new one. If the problem persists, perform Check 2.

Check 2 The System board may be faulty. Replace it with a new one .

USB\TYPE-C Port

To determine if the computer's USB\TYPE-C Port are functioning properly or malfunctions, perform following procedures.

Procedure 1: Connection Check

Make sure USB\TYPE-C device cable has been firmly connected to USB\TYPE-C Port of Main Board. Also make sure USB\TYPE-C Port on Main Board is free of foreign matters, If the problem persists, go to Procedure 2

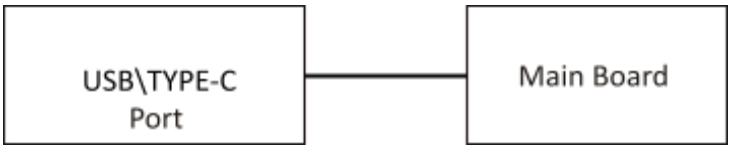

Procedure 2: Replacement Check

Main Board may be faulty. Replace it with a new one .

Headphone/Microphone Port

To determine if the computer's Headphone Port is functioning properly or malfunctions, perform following procedures.

Procedure 1: Connection Check

Make sure peripheral cable has been firmly connected to the port of Main Board. Also make sure the port on Main Board is free of foreign matters, If the problem persists, go to Procedure 2

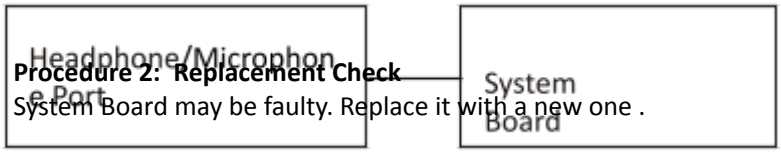

Procedure 2: Replacement Check

System Board may be faulty. Replace it with a new one .

Wireless LAN

Wireless Card or system board may be the reason of Wireless LAN fault. Either of these two components may be damaged. To determine if the computer's Wireless Card is functioning properly, perform following procedures. Start with Procedure 1 and continue with the other procedures as instruction below.

Procedure 1: Connector Check

Procedure 2: Replacement Check

Procedure 1: Connection Check

Disassemble the computer following Disassemble Procedure,remove the Wireless Card, clean the gold finger, and make sure that the slot is free of foreign matters, then plug Wireless Card back in . If the Wireless LAN is still fault ,go to Procedure 2.

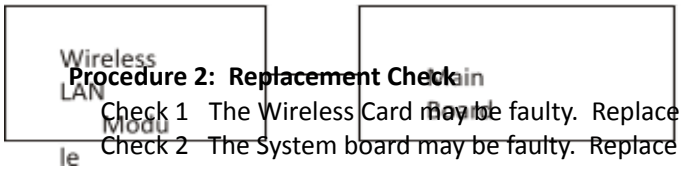

Procedure 2: Replacement Check

Check 1 The Wireless Card may be faulty. Replace it with a new one. If the problem persists, perform Check 2.

Check 2 The System board may be faulty. Replace it with a new one .

LAN Port

To determine if the computer's LAN Port is functioning properly or malfunctions, perform following procedures. Start with Procedure 1 and continue with the other procedure as instruction below.

Procedure 1: Connection Check

Make sure LAN Cable is OK and has been firmly connected to LAN Port on System Board. Also make sure LAN Port on System Board is free of foreign matters.If the LAN is still fault,go to Procedure 2.

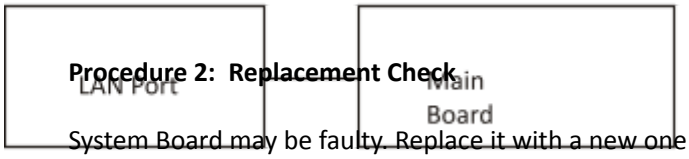

Procedure 2: Replacement Check

System Board may be faulty. Replace it with a new one .

FRU (Field Replaceable Unit) List

This list is for reference only, please contact local service to order the correct replacement part and availability.

ITEMS	PART NAME & DESCRIPTION

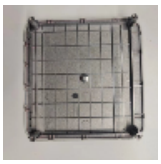	TOP COVER W/ ACER LOGO RB102
	BOTTOM CASE W/ FOOT PAD & POWER BUTTON & WIFI ANTENNA TYPE C
	BOTTOM CASE W/ FOOT PAD & POWER BUTTON & WIFI ANTENNA TBT
	BRACKET MAIN W/ FAN
	BRACKET MAIN W/ FAN FOR RB102-12N0U_UN100
	MB Kit RB102-12N0U Intel N100 Intel UHD Graphics RTK RTL8111x2 Proprietary V1.0
	MB Kit RB102-13U3U Intel Ci31305U Intel UHD Graphics RTK RTL8111x2 Proprietary V1.0
	MB Kit RB102-14U5U Intel CU5125U Intel Graphics RTK RTL8125x2 Proprietary V1.0
	THERMAL FOR RB102-12N0U_UN100
	THERMAL MODULE W/ FAN For RB102-13U3U_UCi31305U,RB102-14U5U_UCU5125U
	Memory SO-DIMM DDRIV 4GB For DT CTE LF+HF turnkey
	Memory SO-DIMM DDRIV 8GB For DT CTE LF+HF turnkey
	Memory SO-DIMM DDRV 8GB For DT CTE LF+HF turnkey
	Flash Disk SSD NAND 128GB turnkey for DT CTE LF+HF
	Flash Disk SSD NAND 512GB turnkey for DT CTE Gen3 LF+HF
ITEMS	**PART NAME & DESCRIPTION**

	Wireless LAN CTE Bluetooth 1x1 AX+BT Turnkey for DT CTE
	Adapter - . 65W TURNKEY PN for DT CTE
	POWER CORD 1.2M BSMI
	Adapter - . 36W TURNKEY PN for DT CTE BSMI
	CABLE EXTEND 100MM FAN TO MAIN BOARD
	VESA BRACKET KIT W/ SCREWS
	PLASTIC 17*12*0.5MM ON WIFI MODULE
	SCREW M2.5*L11*D4.5 MM
	SCREW A*M2.0*4.0mm*D4.5

Exploded Diagrams

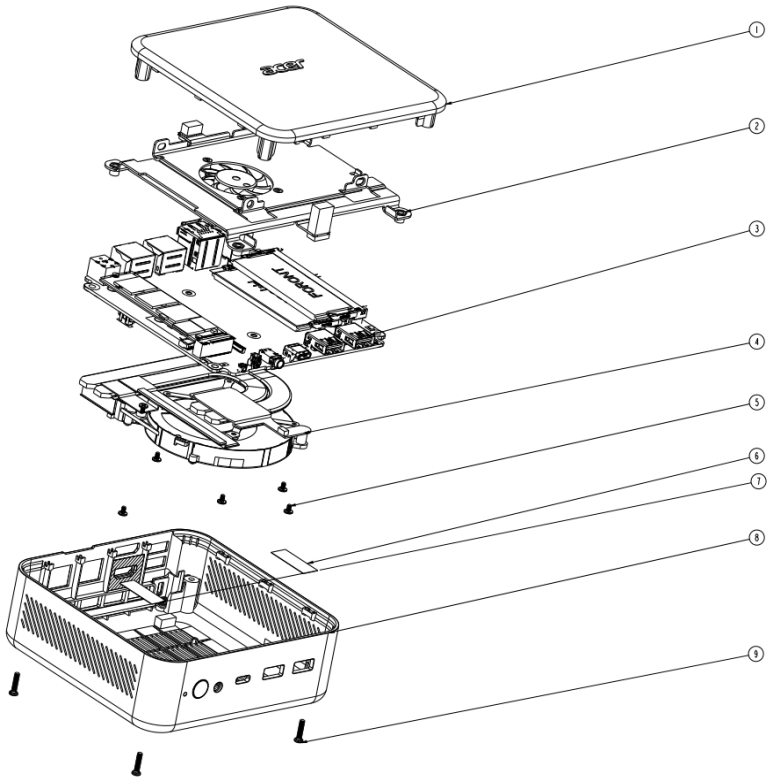

Item	DESCRIPTION
①	Top Cover
②	Bracket
③	Main Board
④	Thermal Module
⑤	Screw M2.0*L4.0
⑥	Main Antenna
⑦	Aux Antenna
⑧	Bottom Case
⑨	Screw M2.5*L11