

HPE Aruba Networking CX 6200F/M Switch Series

Installation and Getting Started Guide

Hewlett Packard Enterprise

Copyright Information

© Copyright 2024 Hewlett Packard Enterprise Development LP.

Open Source Code

This product includes code licensed under certain open source licenses which require source compliance. The corresponding source for these components is available upon request. This offer is valid to anyone in receipt of this information and shall expire three years following the date of the final distribution of this product version by Hewlett Packard Enterprise Company. To obtain such source code, please check if the code is available in the HPE Software Center at https://myenterpriselicense.hpe.com/cwp-ui/software but, if not, send a written request for specific software version and product for which you want the open source code. Along with the request, please send a check or money order in the amount of US $10.00 to:

Hewlett Packard Enterprise Company
Attn: General Counsel
WW Corporate Headquarters
1701 E Mossy Oaks Rd, Spring, TX 77389
United States of America



Legal Disclaimer

The resource assets in this document may include abbreviated and/or legacy terminology for products. See www.arubanetworks.com for current and complete product lines and names.

Notices

The information contained herein is subject to change without notice. The only warranties for Hewlett Packard Enterprise products and services are set forth in the express warranty statements accompanying such products and services. Nothing herein should be construed as constituting an additional warranty. Hewlett Packard Enterprise shall not be liable for technical or editorial errors or omissions contained herein.

Confidential computer software. Valid license from Hewlett Packard Enterprise required for possession, use, or copying. Consistent with FAR 12.211 and 12.212, Commercial Computer Software, Computer Software Documentation, and Technical Data for Commercial Items are licensed to the U.S. Government under vendor's standard commercial license.

Links to third-party websites take you outside the Hewlett Packard Enterprise website. Hewlett Packard Enterprise has no control over and is not responsible for information outside the Hewlett Packard Enterprise website.

Acknowledgments

Microsoft® and Windows® are either registered trademarks or trademarks of Microsoft Corporation in the United States and/or other countries.

UNIX® is a registered trademark of The Open Group.



Contents 3
About this document 4
Applicable products 4
Related publications 5
Introducing the switches 6
Front of the switches 6
Back of the switches 22
Switch features 26
Installing the switch 31
Shipping the switch in a rack 31
Included parts 31
Installation procedures for 6200F/M switches 34
SFP/SFP+ installation notes 59
Getting started with switch configuration 60
Recommended minimal configuration 60
Setup for initial configuration 60
Replacing components 61
Replacing the fan 61
Replacing the power supply 63
Troubleshooting 64
Basic troubleshooting tips 64
Diagnosing with the LEDs 65
Proactive networking 70
Hardware diagnostic tests 71
Restoring the factory default configuration 72
Downloading new switch software 72
Specifications 73
Physical and environmental 73
Electrical 76
Acoustics 79
Safety 81
Battery Statements 82
Connectivity standards 83
Cabling and technology information 85
Cabling specifications 85
Mode conditioning patch cord 87
Twisted-pair cable/connector pin-outs 88
Support and Other Resources 92
Accessing HPE Aruba Networking Support 92
Accessing Updates 92
Warranty Information 93
Regulatory Information 93
Documentation Feedback 93

Chapter 1
About this document

This document is intended for network administrators and support personnel.



The display and command line illustrated in this document are examples and might not exactly match your particular switch or environment.
The switch and accessory drawings in this document are for illustration only, and may not exactly match your particular switch and accessory products.

Applicable products

Non-TAA	TAA
HPE Aruba Networking CX 6200M 24G 4SFP+ switch (R8Q67A)	HPE Aruba Networking CX 6200M 24G 4SFP+ TAA switch (R8V08A)
HPE Aruba Networking CX 6200M 24G Class4 PoE 4SFP+ switch (R8Q68A)	HPE Aruba Networking CX 6200M 24G class4 PoE 4SFP+ TAA switch (R8V09A)
HPE Aruba Networking CX 6200M 48G 4SFP+ switch (R8Q69A)	HPE Aruba Networking CX 6200M 48G 4SFP+ TAA switch (R8V10A)
HPE Aruba Networking CX 6200M 48G Class4 PoE 4SFP+ switch (R8Q70A)	HPE Aruba Networking CX 6200M 48G Class4 PoE 4SFP+ TAA switch (R8V11A)
HPE Aruba Networking CX 6200M 36G 12SR5 Class6 PoE 4SFP+ switch (R8Q71A)	HPE Aruba Networking 6200M 36G 12SR5 Class6 PoE 4SFP+ TAA Switch (R8V12A)
HPE Aruba Networking CX 6200F 12G Class4 PoE 2G/2SFP+ 139W switch (R8Q72A)	HPE Aruba Networking CX 6200F 12G Class4 PoE 2G/2SFP+ 139W TAA Switch (R8V13A)
Aruba CX 6200F 24G 4SFP+ Switch (JL724B)	HPE Aruba Networking CX 6200F 24G 4SFP+ TAA-compliant Switch (S0M86A)
Aruba CX 6200F 24G Class 4 PoE 4SFP+ 370W Switch (JL725B)	HPE Aruba Networking CX 6200F 24G Class 4 PoE 4SFP+ 370W TAA-compliant Switch (S0M87A)
Aruba CX 6200F 48G 4SFP+ Switch (JL726B)	HPE Aruba Networking CX 6200F 48G 4SFP+ TAA-compliant Switch (S0M88A)
Aruba 6200F 48G 4SFP+ switch (JL726A)	HPE Aruba Networking CX 6200F 48G Class 4 PoE 4SFP+ 370W TAA-compliant Switch (S0M89A)
Aruba CX 6200F 24G Class 4 PoE 4SFP+ 370W Switch (JL727B)	HPE Aruba Networking CX 6200F 48G Class 4 PoE 4SFP+ 740W TAA-compliant Switch (S0M90A)
Aruba CX 6200F 48G Class 4 PoE 4SFP+ 740W Switch (JL728B)	HPE Aruba Networking CX 6200F 24G 4SFP TAA-compliant Switch (S0G13A)

Non-TAA	TAA
Aruba 6200F 24G 4SFP+ Switch (JL724A)	HPE Aruba Networking CX 6200F 24G Class 4 PoE 4SFP 370W TAA-compliant Switch (S0G14A)
Aruba 6200F 24G Class 4 PoE 4SFP+ 370W Switch (JL725A)	HPE Aruba Networking CX 6200F 48G 4SFP TAA-compliant Switch (S0G15A)
Aruba 6200F 48G Class 4 PoE 4SFP+ 370W switch (JL727A)	HPE Aruba Networking CX 6200F 48G Class 4 PoE 4SFP 370W TAA-compliant Switch (S0G16A)
Aruba 6200F 48G Class 4 PoE 4SFP+ 740W switch (JL728A)	HPE Aruba Networking CX 6200F 48G Class 4 PoE 4SFP 740W TAA-compliant Switch (S0G17A)
HPE Aruba Networking CX 6200F 24G 4SFP Switch (S0M81A)	
HPE Aruba Networking CX 6200F 24G Class 4 PoE 4SFP 370W Switch (S0M82A)	
HPE Aruba Networking CX 6200F 48G 4SFP Switch (S0M83A)	
HPE Aruba Networking CX 6200F 48G Class 4 PoE 4SFP 370W Switch (S0M84A)	
HPE Aruba Networking CX 6200F 48G Class 4 PoE 4SFP 740W Switch (S0M85A)	
HPE Aruba Networking CX 6200F 12-port Cable Guard (R8Q73A)	

Related publications

- *Start Here: Installation, Safety, and Regulatory Information for the HPE Aruba Networking 6200F/M Switches and Accessories*
- *Start Here: Installation, Safety, and Regulatory Information for the HPE Aruba Networking 6200M Swithces and Accessories*
- *Start Here: Installation, Safety, and Regulatory Information for the HPE Aruba Networking 6200F Swithces and Accessories*
- AOS-CX software manuals
- *AOS-CX Power Over Ethernet (PoE/PoE+) Planning and Implementation Guide*
- *AOS-Switch and AOS-CX Transceiver Guide*

To view and download these publications, visit the Aruba Support Portal at https://asp.arubanetworks.com/downloads.

Chapter 2
Introducing the switches

HPE Aruba Networking 6200F/M switches are stackable devices optimal for high-performance networks supporting multiple use cases.

This chapter describes these switches with the following information:

- Front of the switches:
  - Network ports
  - RJ-45 console port and USB-C console port
  - LEDs
  - Buttons
  - Out-of-Band Management (OOBM)
  - SFP and/or SFP+ uplink ports
- Back of the switches:
  - Power supply(ies) and power connector(s)
  - Fan tray and replaceable power supplies (applicable to 6200M switches only)

Front of the switches

Figure 1 *Front of all the 6200M Switches*

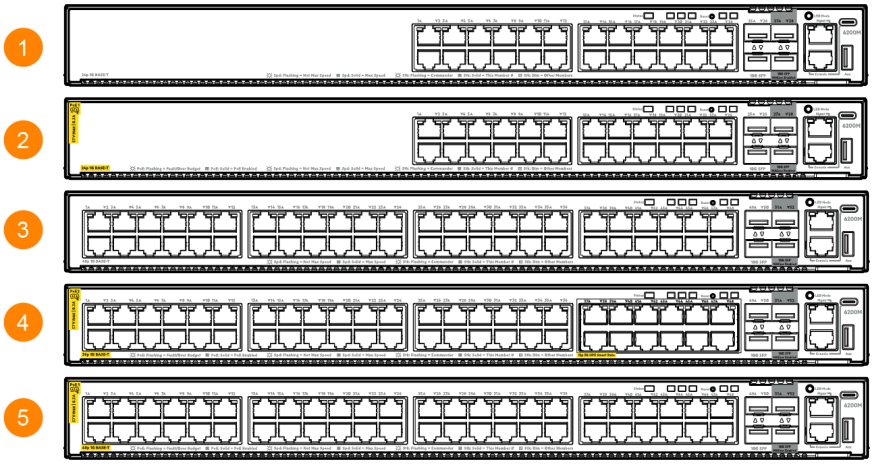

Table 1: Front of all the 6200M switches

Label	Description
1	**R8Q67A** HPE Aruba Networking CX 6200M 24G 4SFP+ Switch **R8V08A** HPE Aruba Networking CX 6200M 24G 4SFP+ TAA Switch
2	**R8Q68A** HPE Aruba Networking CX 6200M 24G Class4 PoE 4SFP+ Switch **R8V09A** HPE Aruba Networking CX 6200M 24G class4 PoE 4SFP+ TAA Switch

Label	Description
3	**R8Q69A** HPE Aruba Networking CX 6200M 48G 4SFP+ Switch **R8V10A** HPE Aruba Networking CX 6200M 48G 4SFP+ TAA Switch
4	**R8Q70A** HPE Aruba Networking CX 6200M 48G Class4 PoE 4SFP+ Switch **R8V11A** HPE Aruba Networking CX 6200M 48G Class4 PoE 4SFP+ TAA Switch
5	**R8Q71A** HPE Aruba Networking CX 6200M 36G 12SR5 Class6 PoE 4SFP+ Switch **R8V12A** HPE Aruba Networking 6200M 36G 12SR5 Class6 PoE 4SFP+ TAA Switch (R8V12A)

Figure 2 *Front of all the 6200F Switches*

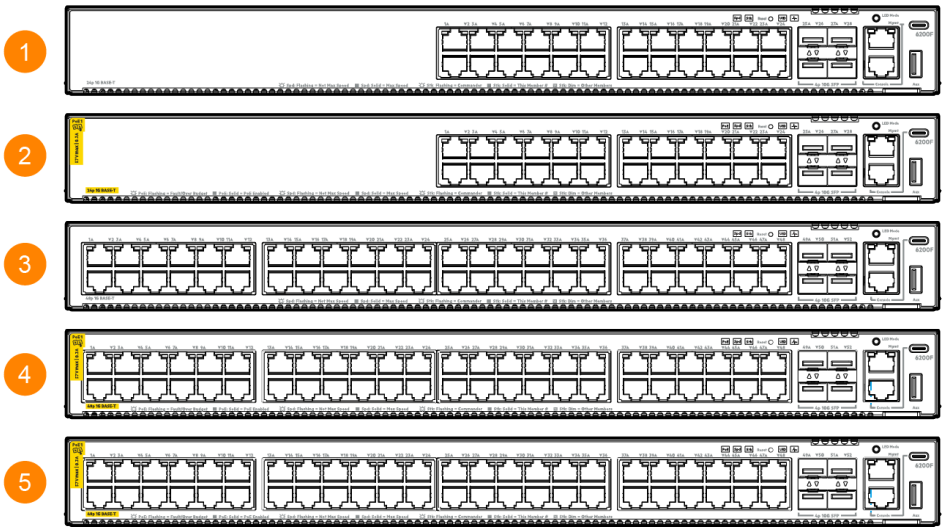

Table 2: Front of all the 6200F switches

Label	Description
1	**JL724A** Aruba 6200F 24G 4SFP+ Switch **JL724B** Aruba CX 6200F 24G 4SFP+ Switch **S0M86A** HPE Aruba Networking CX 6200F 24G 4SFP+ TAA-compliant Switch **S0M81A** HPE Aruba Networking CX 6200F 24G 4SFP Switch **S0G13A** HPE Aruba Networking CX 6200F 24G 4SFP TAA-compliant Switch
2	**JL725A** Aruba 24G Class 4 PoE 4SFP+ 370W Switch **JL725B** Aruba CX 6200F 24G Class 4 PoE 4SFP+ 370W Switch **S0M87A** HPE Aruba Networking CX 6200F 24G Class 4 PoE 4SFP+ 370W TAA-compliant Switch **S0M82A** HPE Aruba Networking CX 6200F 24G Class 4 PoE 4SFP 370W Switch **S0G14A** HPE Aruba Networking CX 6200F 24G Class 4 PoE 4SFP 370W TAA-compliant Switch
3	**JL726A** Aruba 6200F 48G 4SFP+ Switch **JL726B** Aruba CX 6200F 48G 4SFP+ Switch **S0M88A** HPE Aruba Networking CX 6200F 48G 4SFP+ TAA-compliant Switch **S0M83A** HPE Aruba Networking CX 6200F 48G 4SFP Switch **S0G15A** HPE Aruba Networking CX 6200F 48G 4SFP TAA-compliant Switch
4	**JL727A** Aruba 6200F 48G Class 4 PoE 4SFP+ 370W Switch **JL727B** Aruba CX 6200F 48G Class 4 PoE 4SFP+ 370W Switch **S0M89A** HPE Aruba Networking CX 6200F 48G Class 4 PoE 4SFP+ 370W TAA-compliant Switch **S0M84A** HPE Aruba Networking CX 6200F 48G Class 4 PoE 4SFP 370W Switch **S0G16A** HPE Aruba Networking CX 6200F 48G Class 4 PoE 4SFP 370W TAA-compliant Switch

Label	Description
5	**JL728A** Aruba 6200F 48G Class 4 PoE 4SFP+ 740W Switch **JL728B** Aruba CX 6200F 48G Class 4 PoE 4SFP+ 740W Switch **S0M90A** HPE Aruba Networking CX 6200F 48G Class 4 PoE 4SFP+ 740W TAA-compliant Switch **S0M85A** HPE Aruba Networking CX 6200F 48G Class 4 PoE 4SFP 740W Switch **S0G17A** HPE Aruba Networking CX 6200F 48G Class 4 PoE 4SFP 740W TAA-compliant Switch

Figure 3 *Front of the 12p fanless 6200F switches*

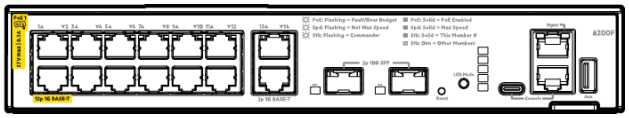

Table 3: Front of the 12p 6200F switches

Label	Description
1	**R8Q72A** HPE Aruba Networking CX 6200F 12G Class4 PoE 2G/2SFP+ 139W Switch **R8V13A** HPE Aruba Networking CX 6200F 12G Class4 PoE 2G/2SFP+ 139W TAA Switch

Network ports

Table 4: Network Ports for 6200M switches

Switch	10/100/1000 BaseT	Smart Rate 100M/1G/2.5G/5G	Smart Rate 100M/1/2.5/5G/10G	SFP+
HPE Aruba Networking CX 6200M 36G 12SR5 Class6 PoE 4SFP+ switch (R8Q71A)	36 (CL6 PoE)	12 (CL6 PoE)	4	-
HPE Aruba Networking 6200M 36G 12SR5 Class6 PoE 4SFP+ TAA Switch (R8V12A)				
HPE Aruba Networking CX 6200M 48G Class4 PoE 4SFP+ switch (R8Q70A)	48 (CL4 PoE)	-	4	-
HPE Aruba Networking CX 6200M 48G Class4 PoE 4SFP+ TAA switch (R8V11A)				

Switch	10/100/1000 BaseT	Smart Rate 100M/1G/2.5G/5G	Smart Rate 100M/1/2.5/5G/10G	SFP+
HPE Aruba Networking CX 6200M 24G Class4 PoE 4SFP+ switch (R8Q68A)	24 (CL4 PoE)	-	4	-
HPE Aruba Networking CX 6200M 24G class4 PoE 4SFP+ TAA switch (R8V09A)				
HPE Aruba Networking CX 6200M 48G 4SFP+ switch (R8Q69A)	48	-	4	-
HPE Aruba Networking CX 6200M 48G 4SFP+ TAA switch (R8V10A)				
HPE Aruba Networking CX 6200M 24G 4SFP+ switch (R8Q67A)	24	-	4	-
HPE Aruba Networking CX 6200M 24G 4SFP+ TAA switch (R8V08A)				

Table 5: Network Ports for 6200F switches

Switch	10/100/1000 BaseT	SFP+
HPE Aruba Networking CX 6200F 24G 4SFP+ Switch (JL724B)	24	4
HPE Aruba Networking CX 6200F 24G 4SFP+ TAA-compliant Switch (S0M86A)		
Aruba 6200F 24G 4SFP+ Switch (JL724A)		
HPE Aruba Networking CX 6200F 24G Class 4 PoE 4SFP+ 370W Switch (JL725B)	24 (CL4 PoE)	4
HPE Aruba Networking CX 6200F 24G Class 4 PoE 4SFP+ 370W TAA-compliant Switch (S0M87A)		
Aruba 6200F 24G Class 4 PoE 4SFP+ 370W Switch (JL725A)		

Switch	10/100/1000 BaseT	SFP+
HPE Aruba Networking CX 6200F 48G 4SFP+ Switch (JL726B)	48	4
HPE Aruba Networking CX 6200F 48G 4SFP+ TAA-compliant Switch (S0M88A)		
Aruba 6200F 48G 4SFP+ switch (JL726A)		
HPE Aruba Networking CX 6200F 24G Class 4 PoE 4SFP+ 370W Switch (JL727B)	-	-
HPE Aruba Networking CX 6200F 48G Class 4 PoE 4SFP+ 370W TAA-compliant Switch (S0M89A)		
Aruba 6200F 48G Class 4 PoE 4SFP+ 370W switch (JL727A)		
HPE Aruba Networking CX 6200F 48G Class 4 PoE 4SFP+ 740W Switch (JL728B)	48 (CL4 PoE)	-
HPE Aruba Networking CX 6200F 48G Class 4 PoE 4SFP+ 740W TAA-compliant Switch (S0M90A)		
Aruba 6200F 48G Class 4 PoE 4SFP+ 740W switch (JL728A)		
HPE Aruba Networking CX 6200F 24G 4SFP Switch (S0M81A)	24	-
HPE Aruba Networking CX 6200F 24G 4SFP TAA-compliant Switch (S0G13A)		
HPE Aruba Networking CX 6200F 24G Class 4 PoE 4SFP 370W Switch (S0M82A)	24 (CL4 PoE)	-
HPE Aruba Networking CX 6200F 24G Class 4 PoE 4SFP 370W TAA-compliant Switch (S0G14A)		
HPE Aruba Networking CX 6200F 48G 4SFP Switch (S0M83A)	48	-
HPE Aruba Networking CX 6200F 48G 4SFP TAA-compliant Switch (S0G15A)		
HPE Aruba Networking CX 6200F 48G Class 4 PoE 4SFP 370W Switch (S0M84A)	48 (CL4 PoE)	-

Switch	10/100/1000 BaseT	SFP+
HPE Aruba Networking CX 6200F 48G Class 4 PoE 4SFP 370W TAA-compliant Switch (S0G16A)		
HPE Aruba Networking CX 6200F 48G Class 4 PoE 4SFP 740W Switch (S0M85A)	48 (CL4 PoE)	-
HPE Aruba Networking CX 6200F 48G Class 4 PoE 4SFP 740W TAA-compliant Switch (S0G17A)		
HPE Aruba Networking CX 6200F 12G Class4 PoE 2G/2SFP+ 139W switch (R8Q72A)	2 (CL4 PoE)	2
HPE Aruba Networking CX 6200F 12G Class4 PoE 2G/2SFP+ 139W TAA Switch (R8V13A)		

For supported transceivers, see the latest version of the *Transceiver Guide* on the Aruba Support Portal.

Switch and port LEDs on front of the switches

Figure 4 *Switch and port LEDS for 6200M switches: HPE Aruba Networking CX 6200M 24G 4SFP+ switch (R8Q67A) and HPE Aruba Networking CX 6200M 24G 4SFP+ TAA switch (R8V08A)*

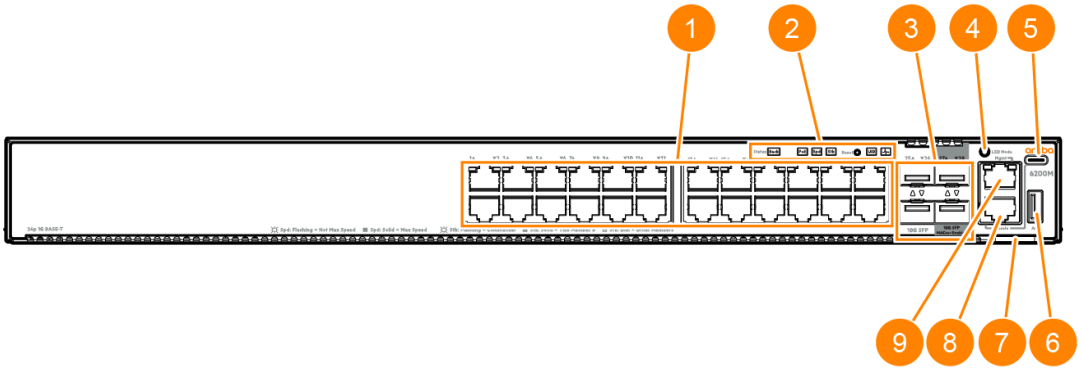

Table 6: Switch and Port LEDs: Labels and Description

Label	Description
1	24p 1G Base-T ports
2	System status LEDs
3	x4 10G SFP ports (x2 MACsec Enabled / x2 LRM Enabled)
4	LED mode select button
5	USB Type-C serial console port

Label	Description
6	USB Type-A Auxilary port
7	Identification tab
8	RJ-45 console port
9	10/100/1000 Mbps Out-of-Band Management port

Figure 5 *Switch and port LEDs for 6200M switches: HPE Aruba Networking CX 6200M 24G Class4 PoE 4SFP+ switch (R8Q68A) and HPE Aruba Networking CX 6200M 24G class4 PoE 4SFP+ TAA switch (R8V09A)*

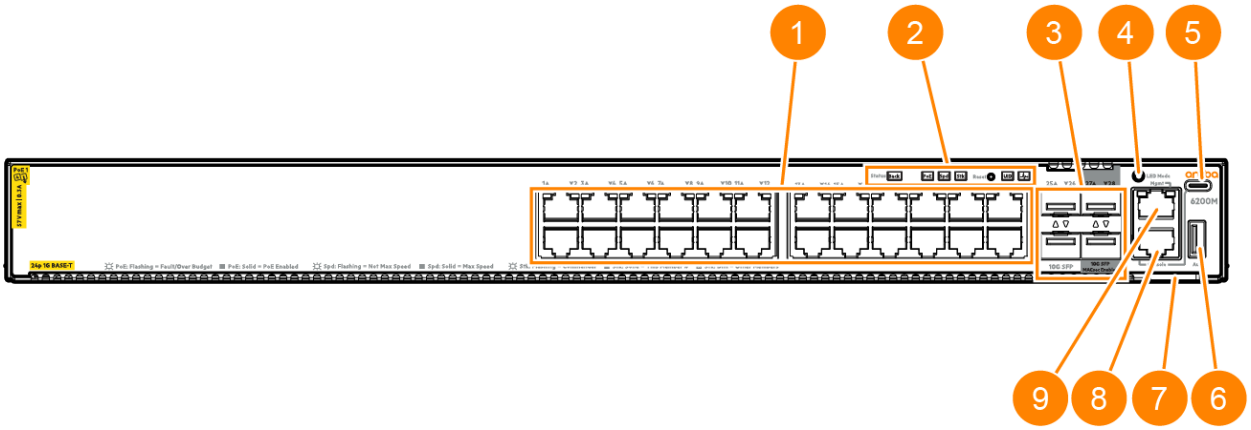

Table 7: Switch and Port LEDs: Labels and Description

Label	Description
1	24p 1G Base-T Class4 PoE ports
2	System Status LEDs
3	x4 10G SFP ports (x2 MACsec Enabled / x2 LRM Enabled)
4	LED mode select button
5	USB Type-C serial console port
6	USB Type-A Auxiliary port
7	Identification tab
8	RJ-45 console port
9	10/100/1000 Mbps Out-of-Band Management port

Figure 6 *Switch and port LEDs for 6200M switches: HPE Aruba Networking CX 6200M 48G 4SFP+ switch (R8Q69A) and HPE Aruba Networking CX 6200M 48G 4SFP+ TAA switch (R8V10A)*

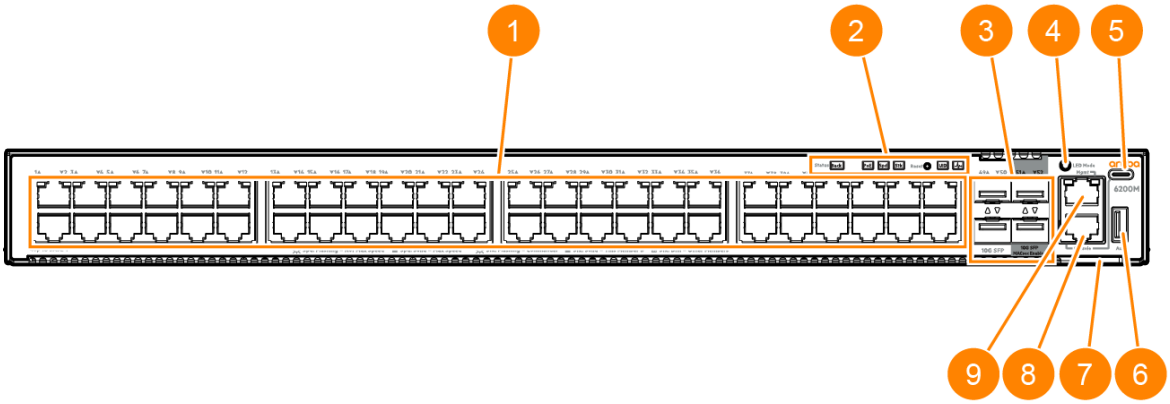

Table 8: Switch and Port LEDs: Labels and Description

Label	Description
1	48p 1G Base-T ports
2	System Status LEDs
3	x4 10G SFP ports (x2 MACsec Enabled / x2 LRM Enabled)
4	LED mode select button
5	USB Type-C serial console port
6	USB Type-A Auxiliary port
7	Identification tab
8	RJ-45 console port
9	10/100/1000 Mbps Out-of-Band Management port

Figure 7 *Switch and port LEDs for 6200M switches: HPE Aruba Networking CX 6200M 48G Class4 PoE 4SFP+ switch (R8Q70A) and HPE Aruba Networking CX 6200M 48G Class4 PoE 4SFP+ TAA switch (R8V11A)*

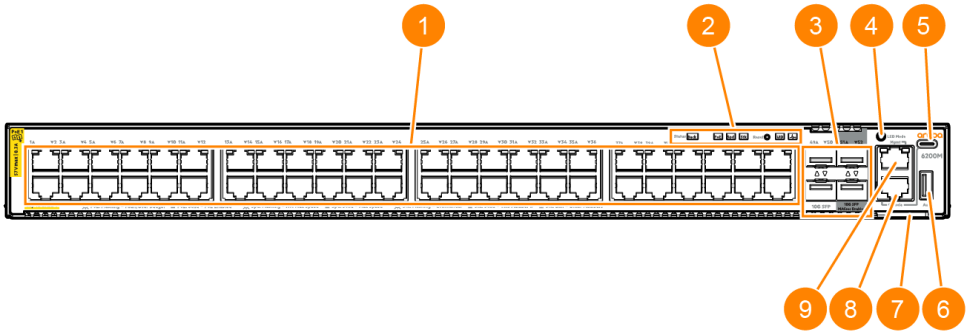

Table 9: Switch and Port LEDs: Labels and Description

Label	Description
1	48p 1G Base-T Class4 PoE ports
2	System Status LEDs
3	x4 10G SFP ports (x2 MACsec Enabled / x2 LRM Enabled)
4	LED mode select button
5	USB Type-C serial console port
6	USB Type-A Auxiliary port
7	Identification tab
8	RJ-45 console port
9	10/100/1000 Mbps Out-of-Band Management port

Figure 8 *Switch and port LEDs for 6200M switches: HPE Aruba Networking CX 6200M 36G 12SR5 Class6 PoE 4SFP+ switch (R8Q71A) and HPE Aruba Networking 6200M 36G 12SR5 Class6 PoE 4SFP+ TAA Switch (R8V12A)*

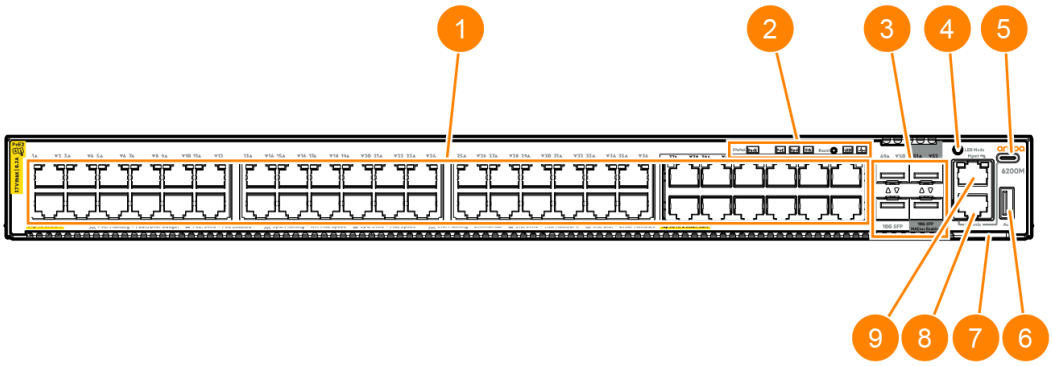

Table 10: Switch and Port LEDs: Labels and Description

Label	Description
1	36p 1G Base-T Class6 PoE ports, and 12p 1G/2.5G/5G Smart Rate Class 6 PoE ports
2	System Status LEDs
3	x4 10G SFP ports (x2 MACsec Enabled / x2 LRM Enabled)
4	LED mode select button
5	USB Type-C serial console port
6	USB Type-A Auxiliary port
7	Identification tab
8	RJ-45 console port
9	10/100/1000 Mbps Out-of-Band Management port

Figure 9 *Switch and port LEDs for 6200F switches: Aruba CX 6200F 24G 4SFP+ Switch (JL724B), Aruba 6200F 24G 4SFP+ Switch (JL724A), HPE Aruba Networking CX 6200F 24G 4SFP+ TAA-compliant Switch (S0M86A), HPE Aruba Networking CX 6200F 24G 4SFP Switch (S0M81A), and HPE Aruba Networking CX 6200F 24G 4SFP TAA-compliant Switch (S0G13A)*

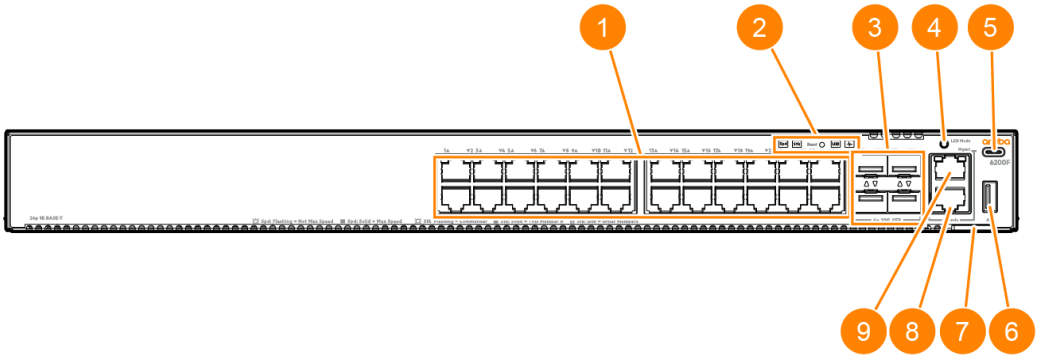

Table 11: Switch and Port LEDs: Labels and Description

Label	Description
1	24p 1G Base-T ports
2	System Status LEDs
3	4p 10G SFP ports
4	LED mode select button
5	USB Type-C serial console port
6	USB Type-A Auxiliary port
7	Identification tab
8	RJ-45 console port
9	10/100/1000 Mbps Out-of-Band Management port

Figure 10 *Switch and port LEDs for 6200F switches: Aruba CX 6200F 24G Class 4 PoE 4SFP+ 370W Switch (JL725B), Aruba 6200F 24G Class 4 PoE 4SFP+ 370W Switch (JL725A) , HPE Aruba Networking CX 6200F 24G Class 4 PoE 4SFP+ 370W TAA-compliant Switch (S0M87A), HPE Aruba Networking CX 6200F 24G Class 4 PoE 4SFP 370W Switch (S0M82A), and HPE Aruba Networking CX 6200F 24G Class 4 PoE 4SFP 370W TAA-compliant Switch (S0G14A)*

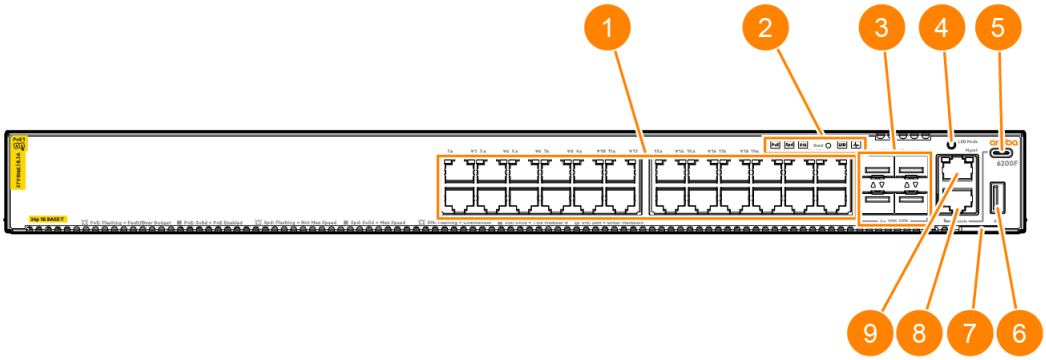

Table 12: Switch and Port LEDs: Labels and Description

Label	Description
1	24p 1G Base-T Class4 PoE ports
2	System Status LEDs
3	4p 10G SFP ports
4	LED mode select button
5	USB Type-C serial console port
6	USB Type-A Auxiliary port
7	Identification tab
8	RJ-45 console port
9	10/100/1000 Mbps Out-of-Band Management port

Figure 11 *Switch and port LEDs for 6200M switches: Aruba CX 6200F 48G 4SFP+ Switch (JL726B), Aruba 6200F 48G 4SFP+ switch (JL726A) , HPE Aruba Networking CX 6200F 48G 4SFP+ TAA-compliant Switch (S0M88A), HPE Aruba Networking CX 6200F 48G 4SFP Switch (S0M83A), and HPE Aruba Networking CX 6200F 48G 4SFP TAA-compliant Switch (S0G15A)*

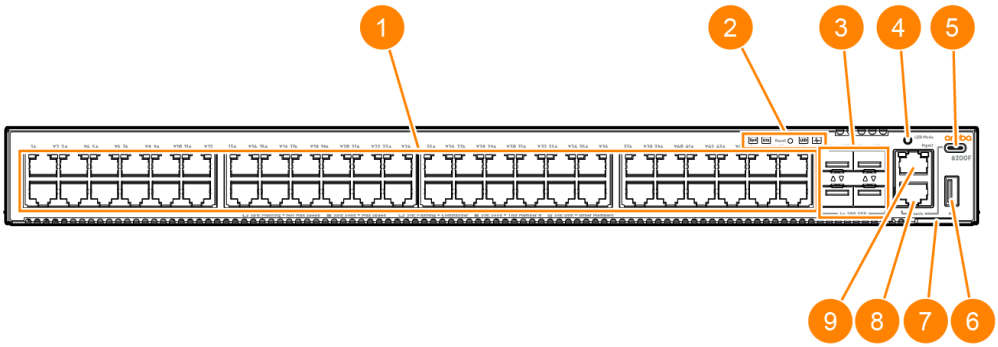

Table 13: Switch and Port LEDs: Labels and Description

Label	Description
1	48p 1G Base-T ports
2	System Status LEDs
3	4p 10G SFP ports
4	LED mode select button
5	USB Type-C serial console port
6	USB Type-A Auxiliary port
7	Identification tab

Label	Description
8	RJ-45 console port
9	10/100/1000 Mbps Out-of-Band Management port

Figure 12 *Switch and port LEDs for 6200F switches: Aruba CX 6200F 48G Class 4 PoE 4SFP+ 370W Switch (JL727B), Aruba 6200F 48G Class 4 PoE 4SFP+ 370W switch (JL727A), HPE Aruba Networking CX 6200F 48G Class 4 PoE 4SFP+ 370W TAA-compliant Switch (S0M89A), HPE Aruba Networking CX 6200F 48G Class 4 PoE 4SFP 370W Switch (S0M84A), and HPE Aruba Networking CX 6200F 48G Class 4 PoE 4SFP 370W TAA-compliant Switch (S0G16A)*

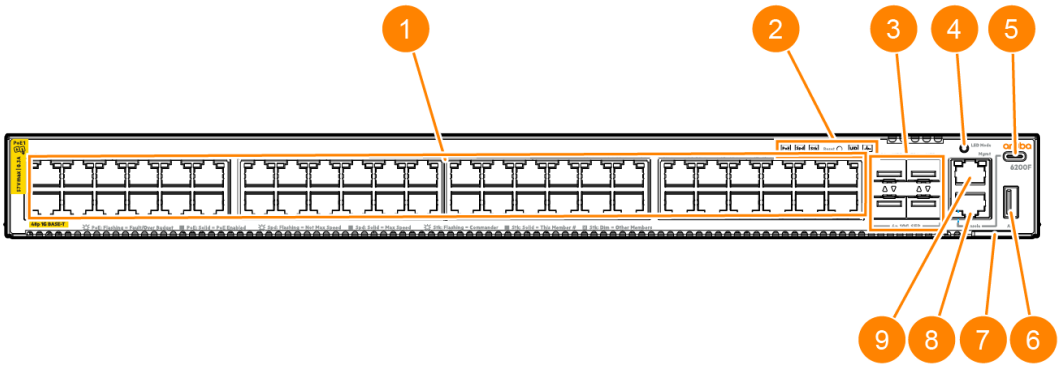

Table 14: Switch and Port LEDs: Labels and Description

Label	Description
1	48p 1G Base-T Class4 PoE ports
2	System Status LEDs
3	4p 10G SFP ports
4	LED mode select button
5	USB Type-C serial console port
6	USB Type-A Auxiliary port
7	Identification tab
8	RJ-45 console port
9	10/100/1000 Mbps Out-of-Band Management port

Figure 13 *Switch and port LEDs for 6200F switches: HPE Aruba Networking CX 6200F 48G Class 4 PoE 4SFP+ 740W Switch (JL728B), Aruba 6200F 48G Class 4 PoE 4SFP+ 740W switch (JL728A), HPE Aruba Networking CX 6200F 48G Class 4 PoE 4SFP+ 740W TAA-compliant Switch (S0M90A), HPE Aruba Networking CX 6200F 48G Class 4 PoE 4SFP 740W Switch (S0M85A), and HPE Aruba Networking CX 6200F 48G Class 4 PoE 4SFP 740W TAA-compliant Switch (S0G17A)*

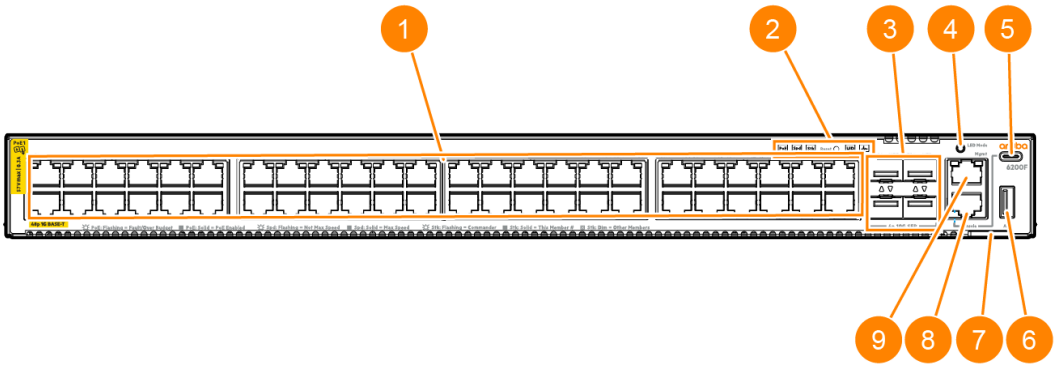

Table 15: Switch and Port LEDs: Labels and Description

Label	Description
1	48p 1G Base-T Class4 PoE ports
2	System Status LEDs
3	4p 10G SFP ports
4	LED mode select button
5	USB Type-C serial console port
6	USB Type-A Auxiliary port
7	Identification tab
8	RJ-45 console port
9	10/100/1000 Mbps Out-of-Band Management port

Figure 14 *Switch and port LEDs for 6200F switches: HPE Aruba Networking CX 6200F 12G Class4 PoE 2G/2SFP+ 139W switch (R8Q72A) and HPE Aruba Networking CX 6200F 12G Class4 PoE 2G/2SFP+ 139W TAA Switch (R8V13A)*

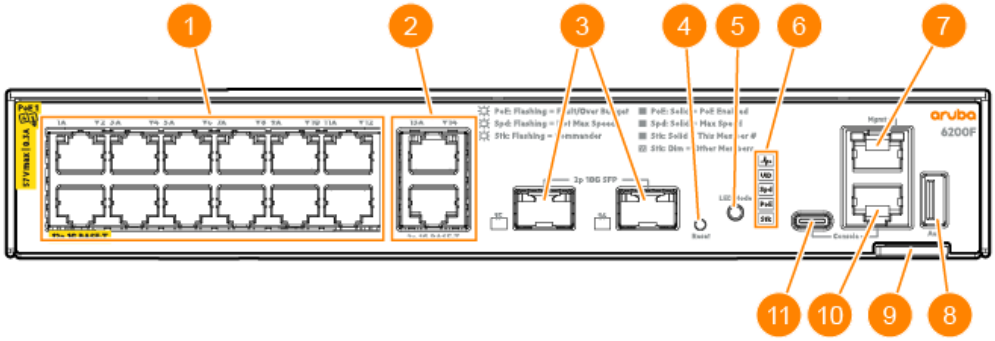

Table 16: Switch and Port LEDs: Labels and Description

Label	Description
1	12p 1G Base-T Class4 PoE ports
2	2p 1G Base-T ports
3	2p 10G SFP ports
4	Reset LED button
5	LED mode select button
6	System status LEDs
7	10/100/1000 Mbps Out-of-Band Management port
8	USB Type-A Auxilary port
9	Identification tab
10	RJ-45 console port
11	USB Type-C serial console port

Table 17: Front Panel LED Behavior

Switch LEDs	Function	State	Meaning
Back LED	Status of modular components installed in the back of the chassis (not applicable for 6200F switches	On - Green	Normal
		Slow Flash - Amber	Fault in one of the modules in the back of the chassis

Switch LEDs	Function	State	Meaning
PoE LED	Indicates Port LEDs are showing PoE information (not applicable for non PoE switches)	Off	PoE mode not selected
		On - Green	PoE mode selected
		Slow Flash - Amber	One or more ports experiencing PoE failure. PoE mode not selected.
		On - Amber	One or more ports experiencing PoE failure. PoE mode selected.
Spd LED	Indicates Port LEDs are showing speed information	Off	Speed mode not selected
		On - Green	Speed mode selected
		Not Implemented	No fault defined
Stk LED	Indicates Port LEDs are showing stacking mode information	Off	Stacking mode not selected
		On - Green	Stacking mode selected
		On - Amber	One of the switch is experiencing stacking failure. Port LEDs will be used to indicate the number of the stacking member.
		Slow flash Amber	A port has a stacking failure. Stacking mode not selected
UID LED	Locator LED	Off	User configured the located LED : OFF
		On/Flash Blue (for 30 min)	User configured the locator LED: On/Flash
Global Status Indicator LED	Overall status of the product	Flash - Green	Self-test in progress during UBOOT and SVOS
		On - Green	Successfully booted AOS-CX
		Flash - Amber	Recoverable faults (e.g. fans, PSU fault)
		On - Amber	Critical faults (e.g. exceed temperature limit)
		Snoring (Dim - Bright periodically)	System is in hibernation

Switch LEDs	Function	State	Meaning
OOBM Status Indicator LED	Status of OOBM Link connectivity	Off	OOBM port is not connected, no link established
		Half Bright - Green	OOBM port is enabled and established link with partner
		On - Green	Experiencing high bandwidth utilization
		Activity Flicker - Green	% of the time that the LED light up is roughly proportional to the % of full bandwidth utilization of the port
* Press the Mode Select button to switch between PoE, Spd, or Stk Mode.			

Table 18: Rear Panel LED Behavior

Switch LEDs	Function	State/Mode	Meaning
Fan health LED	Status of fan	On - Green	Normal
		Slow flash - Amber	Fan fault
UID LED	Locator LED	Off	User configured the locator LED : OFF
		On/Flash (30 min) - blue	User configured the locator LED: On/Flash
PSU Status Indicator LED	Status of power supply	On Green	Normal
		Off	No power, PSU has invalid AC input
		Slow Flash - Green	Power supply has faulted

LED mode select button and indicator LEDs

The state of the switch port LEDs is controlled by the LED Mode select button. The current view mode is indicated by the mode LEDs next to the button. To step from one view mode to the next, press the button to cycle through the different modes.

Reset buttons

The Reset button is recessed from the front panel. (This design protects it from being pushed accidentally.) The button is accessible through small holes on the top of the front panel. Use pointed objects, such as unbent paper clips, to push it.

To Accomplish this:	Do this:	This will happen:
Soft reset	Press and release the Reset button.	The switch operating system is cleared gracefully. The switch then reboots and runs self-tests. Configuration information and user logs from before the reboot are preserved (show event -a).
Hard reset	Press and hold the Reset button for more than 5 seconds, then release.	The switch reboots, similar to a power cycle. A hard reset is used, for example, when the switch CPU is in an unknown state or not responding. Configuration information and user logs from before the reboot are preserved (show event -a).

Out-of-band management port

This RJ-45 port is used to connect a dedicated management network to the switch. To use it, connect an RJ-45 network cable to the out-of-band management port to manage the switch through Telnet from a remote PC or a UNIX workstation.

To use this port, the switch must have an IP address. IP settings can be configured through a console port connection or automatically from a DHCP/Bootp server.

A networked out-of-band connection through the management port allows you to manage data network switches from a physically and logically separate management network.

For more information, see the *Fundamentals Guide* for your switch, found on the Aruba Support Portal.

Back of the switches

Figure 15 *Back of the 6200M Switch*

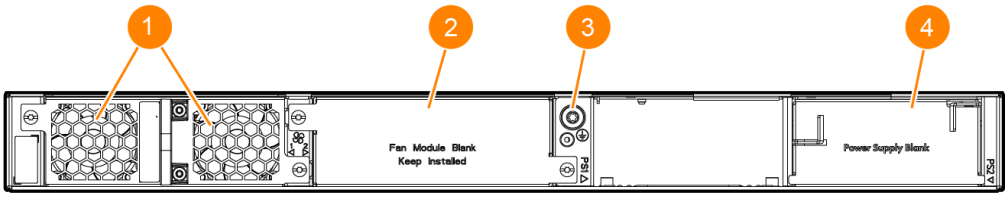

Table 19: Back of the 6200M Switch: Label and Description

Label	Description
1	Fan trays 1 & 2
2	Fan Module blank
3	Ground lug
4	Power supply blank

Figure 16 *Back of the 6200F Switch*

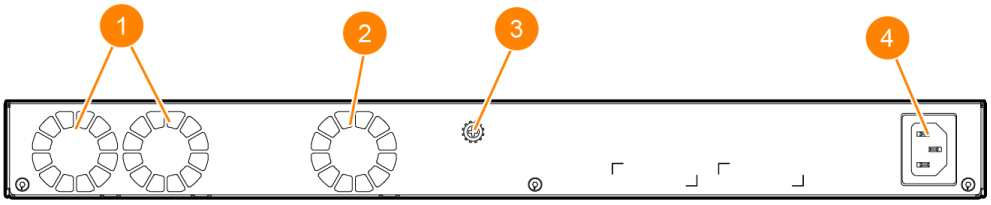

Table 20: Back of the 6200F Switch: Label and Description

Label	Description
1	System Fans
2	Integrated power supply fan
3	Ground lug
4	AC power inlet

LEDs on the back of the switches

This section describes the LEDs on the back of the switch. When the back LED on the front of the unit is blinking a fault, the user can look at the back of the switch to find the corresponding blinking LED for the faulted fan or power supply. If a user installs a second power supply and did not turn on the power (PSU module status = OFF), the back LED will blink orange.

Fan requirements

This section is only applicable to the 6200M switches. Switches in the 6200F family have internal, fixed fans.

Table 21: *Fan requirements for 6200M switches*

Switches	Fan Tray 1	Fan Tray 2
HPE Aruba Networking CX 6200M 36G 12SR5 Class6 PoE 4SFP+ switch (R8Q71A)	Required	Optional
HPE Aruba Networking 6200M 36G 12SR5 Class6 PoE 4SFP+ TAA Switch (R8V12A)	Required	Optional
HPE Aruba Networking CX 6200M 48G 4SFP+ switch (R8Q69A)	Required	Optional
HPE Aruba Networking CX 6200M 48G 4SFP+ TAA switch (R8V10A)	Required	Optional
HPE Aruba Networking CX 6200M 24G 4SFP+ switch (R8Q67A)	Required	Optional

Switches	Fan Tray 1	Fan Tray 2
HPE Aruba Networking CX 6200M 24G 4SFP+ TAA switch (R8V08A)	Required	Optional
HPE Aruba Networking CX 6200M 48G Class4 PoE 4SFP+ switch (R8Q70A)	Required	Optional
HPE Aruba Networking CX 6200M 48G Class4 PoE 4SFP+ TAA switch (R8V11A)	Required	Optional
HPE Aruba Networking CX 6200M 24G Class4 PoE 4SFP+ switch (R8Q68A)	Required	Optional
HPE Aruba Networking CX 6200M 24G class4 PoE 4SFP+ TAA switch (R8V09A)	Required	Optional

Table 22: *Fan information for 6200M switches: HPE Aruba Networking CX 6200M 24G 4SFP+ switch (R8Q67A); HPE Aruba Networking CX 6200M 24G Class4 PoE 4SFP+ switch (R8Q68A); HPE Aruba Networking CX 6200M 48G 4SFP+ switch (R8Q69A); HPE Aruba Networking CX 6200M 48G Class4 PoE 4SFP+ switch (R8Q70A); and HPE Aruba Networking CX 6200M 36G 12SR5 Class6 PoE 4SFP+ switch (R8Q71A)*

Fan Condition	Fan Speed	Fan Redundancy	Shutdown
System installed with 2 fan trays			
4 fans functioning normally	According to ambient and component temperature	N+1	Component hits thermal limit
1 fan fault	Remaining fans will spin at Max speed	Not supported	Component hits thermal limit
More than 1 fan fault	Remaining fans will spin at Max speed	Not supported	Upon detection, system will be shut down in 3 minutes or component hits thermal limit
System installed with 1 fan tray			
2 fans functioning normally	According to ambient and component temperature	Not supported	Component hits thermal limit
1 fan fault	Remaining fans will spin at Max speed	Not supported	Upon detection, system will be shut down in 3 minutes or component hits thermal limit
2 fans fault	N/A	Not supported	Upon detection, system will be shut down in 3 minutes or component hits thermal limit
System with no fan tray			
Missing both fan tray/all fans faulted	N/A	Not supported	Upon detection, system will be shut down in 3 minutes or component hits thermal limit.

Fan redundancy refers to fans and not fan trays. With 2 fan trays installed, it allows 1 fan fault. With 1 fan tray, there is no fan redundancy.
Fan tray with faulty fan/fans must be replaced with Aruba X751 FB Tray (JL669B).

Power supplies

This section is only applicable to the 6200M switches. Switches in the 6200F family have internal, fixed power supplies.

The following power supplies can be installed in the 6200M switches:

- **Aruba X371 12VDC 250W 100-240VAC Power Supply (JL085A):** A 250 watt power supply for the non-PoE switches. This power supply does not provide any PoE power, and is keyed so that it will not fit into the power supply slots of Aruba PoE switches. The following switches support this power supply:
  - HPE Aruba Networking CX 6200M 24G 4SFP+ switch (R8Q67A)
  - HPE Aruba Networking CX 6200M 48G 4SFP+ switch (R8Q69A)
  - HPE Aruba Networking CX 6200M 24G 4SFP+ TAA switch (R8V08A)
  - HPE Aruba Networking CX 6200M 48G 4SFP+ TAA switch (R8V10A)
- **Aruba X372 54VDC 680W 100-240VAC Power Supply (JL086A):** A 680 watt power supply for applicable PoE switches. Offers up to 370 watts of PoE power, and is keyed so that it will not fit into the power supply slots of non-PoE Aruba switches. The following switches support this power supply:
  - HPE Aruba Networking CX 6200M 24G Class4 PoE 4SFP+ switch (R8Q68A)
  - HPE Aruba Networking CX 6200M 24G class4 PoE 4SFP+ TAA switch (R8V09A)
  - HPE Aruba Networking CX 6200M 48G Class4 PoE 4SFP+ Switch (R8Q70A)
  - HPE Aruba Networking CX 6200M 48G Class4 PoE 4SFP+ TAA Switch (R8V11A)
  - HPE Aruba Networking CX 6200M 36G 12SR5 Class6 PoE 4SFP+ Switch (R8Q71A)
  - HPE Aruba Networking 6200M 36G 12SR5 Class6 PoE 4SFP+ TAA Switch (R8V12A)
- **Aruba X372 54VDC 1050W 110-240VAC Power Supply (JL087A):** A 1050 watt power supply for applicable PoE switches. Offers up to 740 watts of PoE power, and is keyed so that it will not fit into the power supply slots of non-PoE Aruba switches. The following switches support this power supply:
  - HPE Aruba Networking CX 6200M 24G Class4 PoE 4SFP+ Switch (R8Q68A)
  - HPE Aruba Networking CX 6200M 24G Class4 PoE 4SFP+ TAA Switch (R8V09A)
  - HPE Aruba Networking CX 6200M 48G Class4 PoE 4SFP+ Switch (R8Q70A)
  - HPE Aruba Networking CX 6200M 48G Class4 PoE 4SFP+ TAA Switch (R8V11A)
  - HPE Aruba Networking CX 6200M 36G 12SR5 Class6 PoE 4SFP+ Switch (R8Q71A)
  - HPE Aruba Networking CX 6200M 36G 12SR5 Class6 PoE 4SFP+ TAA Switch (R8V12A)

For initial power supply installation, see the *Start Here* guide that pertains to your power supply unit.

Power connector

The 6200F/M switches do not have a power switch. They will power on when either one or both power supplies are connected to an active power source.

Switch features

The features of the 6200 F/M switches include:

- Combinations of fixed 10/100/1000-T, HPE Smart Rate, and SFP/SFP+ ports.
- Selected switch models feature HPE Smart Rate ports and provide 1 Gbps, 2.5 Gbps, and 5 Gbps connectivity. See Cabling specifications for more information.
- Power over Ethernet (PoE) operation; enabled by default. The following switches power IP phones, wireless access points, indoor web cameras, and more.

HPE Aruba Networking 6200F/M switches	PoE per port	Standard
HPE Aruba Networking CX 6200M 48G Class4 PoE 4SFP+ Switch (R8Q70A)	Up to 30W Up to 30W	IEEE 802.3af/at

HPE Aruba Networking 6200F/M switches	PoE per port	Standard
HPE Aruba Networking CX 6200M 48G Class4 PoE 4SFP+ TAA Switch (R8V11A)		
HPE Aruba Networking CX 6200M 24G Class4 PoE 4SFP+ Switch (R8Q68A)		
HPE Aruba Networking CX 6200M 24G Class4 PoE 4SFP+ TAA Switch (R8V09A)		
Aruba 6200F 24G Class 4 PoE 4SFP+ 370W Switch (JL725A)		
HPE Aruba Networking CX 6200F 24G Class 4 PoE 4SFP+ 370W Switch (JL725B)		
HPE Aruba Networking CX 6200F 24G Class 4 PoE 4SFP+ 370W TAA-compliant Switch (S0M87A)		
HPE Aruba Networking CX 6200F 24G Class 4 PoE 4SFP 370W Switch (S0M82A)		
HPE Aruba Networking CX 6200F 24G Class 4 PoE 4SFP 370W TAA-compliant Switch (S0G14A)		
Aruba 6200F 48G Class 4 PoE 4SFP+ 370W Switch (JL727A)		
HPE Aruba Networking CX 6200F 48G Class 4 PoE 4SFP+ 370W Switch (JL727B)		
HPE Aruba Networking CX 6200F 48G Class 4 PoE 4SFP 370W Switch (S0M84A)		
HPE Aruba Networking CX 6200F 48G Class 4 PoE 4SFP 370W TAA-compliant Switch (S0G16A)		
Aruba 6200F 48G Class 4 PoE 4SFP+ 740W Switch (JL728A)		
HPE Aruba Networking CX 6200F 48G Class 4 PoE 4SFP+ 740W Switch (JL728B)		
HPE Aruba Networking CX 6200F 48G Class 4 PoE 4SFP+ 740W TAA-compliant Switch (S0M90A)		
HPE Aruba Networking CX 6200F 48G Class 4 PoE 4SFP 740W Switch (S0M85A)		
HPE Aruba Networking CX 6200F 48G Class 4 PoE 4SFP 740W TAA-compliant Switch (S0G17A)		
HPE Aruba Networking CX 6200F 12G Class4 PoE 2G/2SFP+ 139W Switch (R8Q72A)		
HPE Aruba Networking CX 6200F 12G Class4 PoE 2G/2SFP+ 139W TAA Switch (R8V13A)		

HPE Aruba Networking 6200F/M switches	PoE per port	Standard
HPE Aruba Networking CX 6200M 36G 12SR5 Class6 PoE 4SFP+ Switch (R8Q71A)	Up to 60W	IEEE 802.3bt IEEE 802.3af/at**
HPE Aruba Networking 6200M 36G 12SR5 Class6 PoE 4SFP+ TAA Switch (R8V12A)		

- The option to have one or two modular power supplies in the 6200M switch:
  - A second power supply supports redundant system power and/or redundant/additional PoE power. If one of the modular power supplies fails, the second power supply immediately provides the power necessary to keep the switch running, including PoE power on an allocated basis.
  - If maximum PoE power is used on the 48-port PoE switches, the second power supply is needed for PoE power. There is no PoE power redundancy, but system power is always maintained. On a power supply failure, the system drops the PoE power on ports based on user priority, to maintain system power.
- Plug-and-play networking: All ports are enabled by default. Connect the network cables to active network devices and your switched network is operational.
- Auto MDI/MDI-X on all twisted-pair ports (10/100/1000), meaning that all connections can be made using straight-through twisted-pair cables. Cross-over cables are not required, although they will also work. The pin operation of each port is automatically adjusted for the attached device. If the switch detects that another switch or hub is connected to the port, it configures the port as MDI. If the switch detects that an end node device is connected to the port, it configures the port as MDI-X . (See the appendixes for recommended or required cabling.)
- Automatically negotiated full-duplex operation for the 10/100/1000 RJ-45 ports when connected to other auto-negotiating devices. The SFP+/SFP56 ports always operate at full duplex.
- Easy management of the switch through several available interfaces:
  - **Console interface**: A full-featured, easy-to-use, VT-100 terminal interface for out-of-band or in-band switch management.
  - **Web browser interface**: An easy-to-use built-in graphical interface that can be accessed from common web browsers.
  - **Bluetooth adapter and ArubaOS-CX Mobile App**: A convenient way to manage or configure your switch using your mobile device.
  - **Aruba AirWave**: A powerful and easy-to-use network operations system that manages wired and wireless infrastructures. For more information, visit https://www.arubanetworks.com/products/networking/management/airwave.
  - **Aruba Activate**: Cloud-based service that provides inventory control and facilitates Zero Touch Provisioning.
  - **Aruba ClearPass Policy Manager**: Network policy management software for wired and wireless network devices that provide on-boarding and role-based control/security.
  - **Aruba Central**: Network management software cloud platform. It offers IT organizations a simple, secure, and cost-effective way to manage and monitor HPE Aruba Networking switches and HPE Aruba Networking instant wireless APs.
- Support for the Spanning Tree Protocol to eliminate network loops.
- Maximum count of 2k VLANs is supported in 6200, however, it is possible for user to select a number within 4k VLAN range to create a VLAN.

- Support for many advanced features to enhance network performance: For a description, see the AOS-CX guides for your switch.
- Ability to update the switch software. To download product updates, go to the Aruba Support Portal.
- An auxiliary port (USB Type A connector) for updating switch software.

The following sections shows how to install the switch. The switches come with an accessory kit that includes the brackets for mounting the switch in a standard 19-inch telco rack or in an equipment cabinet. Also included are rubber feet that can be attached so the switch can be securely positioned on a horizontal surface. The brackets are designed to allow mounting the switch in a variety of locations and orientations. For other mounting options, contact your local Hewlett Packard Enterprise authorized network reseller or Hewlett Packard Enterprise representative.

Shipping the switch in a rack

If the switch is to be shipped in a rack, it can be mounted and shipped in a Hewlett Packard Enterprise Universal Rack. This method uses the following mounting kit options:

- HPE Aruba Networking X414 1U Universal 4-post Rack Mounting kit (J9583B)

To order a mounting kit, contact your HPE Aruba Networking sales representative.

Included parts

The 6200 F/M switches have the following components shipped with them:



A USB-C to USB-A console cable can be ordered separately, or as an accessory to your switch.

- Documentation kit
- Accessory kit for 6200M models (5400-3445) containing:
  - two mounting brackets
  - eight 8-mm M4 screws to attach the mounting brackets to the switch
  - four 5/8-inch number 12-24 screws to attach the switch to a rack
  - four rubber feet
- Accessory kit for 6200F 12-port models (5300-1868) containing:
  - two mounting brackets
  - eight 10-mm M4 screws to attach the mounting brackets to the switch
  - four 5/8-inch number 12-24 screws to attach the switch to a rack
  - four rubber feet
- Accessory kit for 6200F 24- and 48-port models (5300-1364) containing:
  - two mounting brackets
  - eight 8-mm M4 screws to attach the mounting brackets to the switch
  - four 5/8-inch number 12-24 screws to attach the switch to a rack

- four rubber feet

- Power cord, one of the following (included with power supply unit):

Table 23: C13 Power Cord Types for the 6200M/F switches

Country or Region	Part #	Option*	SKU	Description
Argentina	8121-1481	#ARM	J9891A	HPE 1.9m C13 to IRAM 2073 Pwr Cord
Australia/New Zealand	8121-0729	#ABG	J9883A	HPE 1.9m C13 to SAA/3 Pwr Cord
Brazil	8121-1071	#AC4	J9894A	HPE 1.9m C13 to BR3 10Amp Pwr Cord
Chile	8121-0735	#A1X	J9886A	HPE 1.9m C13 to CEI 23-50 Pwr Cord
China	8121-0943	#AKM	J9890A	HPE 1.9m C13 to GB 1002 Pwr Cord
Continental Europe	8121-0731	#ABB	J9885A	HPE 1.9m C13 to CEE 7-VIIGK Pwr Cord
Denmark	8121-0733	#ACE	J9888A	HPE 1.9m C13 to DK 2 5Amp Pwr Cord
India	8121-0564	#ACJ	J9892A	HPE 1.9m C13 to IS 1293 Pwr Cord
Israel	8121-1004	#AKJ	J9899A	HPE 1.9m C13 to IL-3 90Deg Pwr Cord
Japan	8121-1143	#ACF	J9893A	HPE 1.9m C13 to 498GJ JP Pwr Cord
South Africa	8121-0737	#ACQ	J9956A	HPE 2.5m C13 to SABS 164-1 Pwr Cord
South Korea	8121-0731	#AC6	J9885A	HPE 1.9m C13 to CEE 7-VIIGK Pwr Cord
Switzerland	8121-0738	#ACD	J9898A	HPE 1.9m C13 to SEV 6534-2 T12G Pwr Cord
Taiwan	8121-0964	#ARB	J9887A	HPE 1.9m C13 to CNS 10917-3 Pwr Cord
Thailand	54004553	#AKL	J9895A	HPE 1.9m C13 to LP-81 Pwr Cord
UK, Malaysia	8121-0739	#ACC, #ARE	J9884A	HPE 1.9m C13 to BS 1363/A Pwr Cord
North America	8121-1141	#ABA	J9896A	HPE 1.9M C13 to NEMA 5-15P Pwr Cord

Country or Region	Part #	Option*	SKU	Description
PDU Cable NA/JP/TW/RoW	142263-001	#B2B, #B2C	JL697A	HPE 2.0m C13 to C14 PDU Pwr Cord
PDU cable, India	P09371-001	PDU for India	JL671A	HPE 2.0m C13 to C14 PDU (IN) Pwr Cord
220V NA (North America)	8120-3996	#B2E	JL9936A	HPE 2.3m C13 to NEMA 6-15P Pwr Cord

Table 24: C15 Power Cord Types for the 6200M/F switches

Country or Region	Part #	Option*	SKU	Description
Argentina	8121-1481	#ARM	J9960A	HPE 2.5m C15 to IRAM 2073 250V Power Cord
Australia/New Zealand	8121-1476	#ABG	J9941A	HPE 2.5m C15 to SAA/3 250V Power Cord
Brazil	8121-1265	#AC4	J9951A	HPE 2.5m C15 to BR3 10Amp 250V Power Cord
Chile	8121-1477	#A1X	J9946A	HPE 2.5m C15 to CEI 23-50 3-pole 250V Power Cord
China	8121- 1484	#AKM	J9949A	HPE 2.5m C15 to PRC/3 250V Power Cord
Continental Europe	8121-1479	#ABB	J9945A	HPE 2.5m C15 to CEE 7-VIIG 250V Power Cord
Denmark	8121-1486	#ACE	J9948A	HPE 2.5m C15 to DK 2-5A 250V Power Cord
India	8121-1721	#ACJ	JL696A	HPE 2.5m C15 to ZA/3 250V Power Cord
Israel	8121-1478	#AKJ	J9958A	HPE 2.5m C15 to IL-3 90 Degree 250V Power Cord
Japan high line	8120-8945	#ACF	JL336A	HPE 2.5m C15 to 498GJ JP 3-pole 125V Power Cord
Japan low line	8121-1738	#ACF	JL352A	HPE 2.5m C15 to 6/15AJ 200V 15Amp JP Non-locking Power Cord
South Africa	8121- 1483	#ACQ	J9956A	HPE 2.5m C15 to ZA/3 250V Power Cord
South Korea	8121-1479	#AC6	J9945A	HPE 2.5m C15 to CEE 7-VIIG 250V Power Cord
Switzerland	8121-1480	#ACD	J9957A	HPE 2.5m C15 to SEV 6534-2 Type 12G 250V Power Cord

Country or Region	Part #	Option*	SKU	Description
Taiwan	8121-1511	#ARB	J9947A	HPE 2.5m C15 to TW15CS3 125V Power Cord
Thailand	8121-1485	#AKL	J9952A	HPE 2.5m C15 to NEMA 5-15P TH 250V Power Cord
UK, Malaysia	8121-1475	#ACC, #ARE	J9942A	HPE 2.5m C15 to BS 1363/A 250V Power Cord
North America	8121-0914	#ABA	J9953A	HPE 2.5m C15 to NEMA 5-15P Power Cord
220V North America Locking	8121-0941	Non-Locking Hi-voltage	J9955A	HPE 2.5m C15 to NEMA L6-20P 250V Locking Power Cord
PDU Cable NA/JP/TW**	8121-1091	#B2B	J9943A	HPE 2.5m C15 to C14 PDU NA/JP/TW Power Cord
PDU Cable Rest of World (except India)	8121-1094	#B2C	J9944A	HPE 2.5m C15 to C14 PDU Rest of World Power Cord
PDU cable, India	P09373-001	PDU for India	JL672A	HPE 2.5m C15 to C14 PDU India Power Cord
220V NA (North America)	8120-8945	#B2E	JL336A	HPE 2.5m C15 to NEMA 6-20P 250V Non-locking Power Cord

製品には、同梱された電源コードをお使い下さい。
同梱された電源コードは、他の製品では使用出来ません。

Installation procedures for 6200F/M switches

1. Prepare the installation site.
2. Unpack the switch and verify that you have received the correct parts.
3. Install a power supply if the switch was not shipped with a power supply already installed (applicable to 6200M models only).
4. Connect power to the switch and wait for the health LED to turn green after the switch passes the self-test, then remove power from the switch.
5. Mount the switch.

Mounting restrictions apply. See the "Warning" under "Installation precautions and guidelines".

6. Connect the switch to a power source.
7. (Optional) Install transceivers.
8. Connect the network cables.
9. Configure the switch for network operation.

Installation precautions and guidelines

To avoid personal injury or product damage when installing your switch, read the following installation precautions and guidelines.



- With the exception of HPE Aruba Networking CX 6200F 12G Class4 PoE 2G/2SFP+ 139W switch (R8Q72A) and HPE Aruba Networking CX 6200F 12G Class4 PoE 2G/2SFP+ 139W TAA Switch (R8V13A), do not mount the switch on a wall or under a table or under another horizontal surface.
- Mount devices installed in a rack or cabinet as low as possible. Put the heaviest devices at the bottom and progressively lighter devices positioned higher.
- To prevent the rack or cabinet from becoming unstable and/or falling over, ensure that it is adequately secured.

Il existe des restrictions relatives au montage. Consultez la section « Avertissement » de la rubrique « Précautions et directives d'installation ».



- À l'exception du commutateur réseau HPE Aruba CX 6200F PoE 2G/2SFP+ 139W 12G de classe 4 (R8Q72A) et du commutateur réseau HPE Aruba CX 6200F PoE 2G/2SFP+ 139W TAA 12G de classe 4 (R8V13A), ne montez pas le commutateur sur un mur, sous une table ou sous toute autre surface horizontale.
- Montez les appareils installés sur un rack ou dans une armoire aussi bas que possible. Placez les appareils les plus lourds en bas, puis installez les autres appareils au-dessus, en allant des plus lourds aux plus légers.
- Pour éviter tout risque d'instabilité ou de chute des racks ou des armoires, assurez-vous qu'ils sont correctement sécurisés.

- Do not ship any switch in a rack without checking for restrictions. Otherwise, you may void the switch warranty.
- Ensure that the power source circuits are properly grounded. Then connect the switch to the power source by using the power cord supplied with the switch.
- When installing the switch, ensure that the AC outlet is near the switch. Make it easily accessible in case the switch must be powered off.
- Ensure that the power cord and network cables at the switch mounting location do not create a tripping hazard.
- Do not install the switch in an environment where the operating ambient temperature exceeds its specification. For operating temperature information, see Physical and environmental specifications.
- Ensure that the switch does not overload the power circuits, wiring, and over-current protection at your installation site. To determine the possibility of overloading the supply circuits, add the ampere ratings of all devices installed on the same circuit as the switch. Then compare the total with the rating limit for the circuit. The maximum ampere ratings are printed on the devices near the AC power connectors.
- Avoid blocking any ventilation openings on the sides, rear, or front of the switch.
- Ensure that the air flow around the switch is not restricted.
    - **For HPE Aruba Networking 6200F 12G Class4 PoE 2G/2SFP+ 139W Switch (R8Q72A) and HPE Aruba Networking 6200F 12G Class4 PoE 2G/2SFP+ 139W TAA Switch (R8V13A) models:** In the front or the back of the switch, leave at least 15.24 cm (6 inches) of space for the twisted-pair and fiber-optic cabling.
    - **For all other 24- and 48-port models:** In the front or the back of the switch, leave at least 7.6 cm (3 inches) of space for the twisted-pair and fiber-optic cabling.
- A slot cover plate MUST be secured over any power supply slot that does not contain a power supply unit. This is required for proper air flow and thermal operation. Leaving a power supply slot uncovered can cause an over-temperature condition inside the switch that can result in the switch shutting down. During replacement of a power supply unity, it is acceptable to allow the slot to remain uncovered for up to two minutes in a switch connected to a power source (applicable to 6200M models only).
- Marking label (includes power rating) is at the bottom of the switch.
- This switch equipment is not suitable for use in locations where children are likely to be present.

- N’expédiez pas un commutateur déjà monté sur rack avant d’avoir consulté les restrictions applicables. Dans le cas contraire, vous risquez d’annuler la garantie du commutateur.

- Assurez-vous que les circuits d'alimentation sont correctement mis à la terre. Connectez ensuite le commutateur réseau à une source d'alimentation à l'aide du câble d'alimentation fourni avec le commutateur.
- Veillez à installer le commutateur réseau à proximité d'une prise de courant. Celle-ci doit être facilement accessible de façon à pouvoir mettre rapidement le commutateur hors tension si nécessaire.
- Assurez-vous que personne ne trébuchera sur le câble d'alimentation et sur les câbles réseau à l'emplacement d'installation du commutateur réseau.
- N'installez pas le commutateur réseau dans un environnement où la température ambiante dépasse sa spécification.
- Pour obtenir des informations sur la température de fonctionnement, consultez les spécifications physiques et environnementales.
- Assurez-vous que le commutateur réseau ne surcharge pas les circuits d'alimentation, le câblage et la protection contre les surtensions sur votre
- site d'installation. Pour évaluer le risque de surcharge des circuits d'alimentation, additionnez l'ampérage des
- appareils installés sur le même circuit que le commutateur réseau. Comparez ensuite le total ainsi obtenu avec l'intensité nominale du circuit.
- L'intensité nominale maximale d'un appareil est imprimée sur une étiquette située près des connecteurs d'alimentation CA.
- Évitez d'obstruer les évents situés sur les côtés, à l'arrière ou à l'avant du commutateur réseau.
- Assurez un flux d'air constant autour du commutateur réseau.
    - **Pour le commutateur réseau HPE Aruba Networking 6200F 12G PoE 2G/2SFP+ 139W de classe 4 (R8Q72A) et le commutateur réseau HPE Aruba Networking 6200F PoE 12G de classe 4 Modèles de commutateurs réseau 2G/2SFP+ 139W TAA (R8V13A)** : À l'avant ou à l'arrière du commutateur réseau, laissez un espace d'au moins 15,24 cm (6 po) pour les câbles à paires torsadées ou à fibres optiques.
    - **Pour tous les autres modèles à 24 et 48 ports**: À l'avant ou à l'arrière du commutateur réseau, laissez un espace d'au moins 7,6 cm (3 po) pour les câbles à paires torsadées ou à fibres optiques.
- Il est NÉCESSAIRE de fixer une plaque de protection sur tous les logements d'alimentation vides. Ceci est nécessaire afin d'assurer un flux d'air et un fonctionnement thermique optimaux. Un logement d'alimentation sans protection risque d'entraîner une surchauffe à l'intérieur du commutateur réseau, ce qui peut provoquer une panne. Lors du remplacement d'un bloc d'alimentation, vous pouvez laisser le logement sans protection pendant environ deux minutes sur un commutateur réseauconnecté à une source d'alimentation (concerne les modèles 6200M uniquement).
- L'étiquette de marquage (indiquant notamment la puissance nominale) se trouve sous le commutateur.
- Évitez d'utiliser le commutateur en présence d'enfants.

NOTE:

- Use only supported HPE Aruba Networking transceivers and DAC cabes.
- The HPE Aruba Networking CX 6200F/M switch port side transceiver slots support SFP and SFP+ transceivers.
- For more information, see the latest version of the following two guides:
  - *Installation and Getting Started Guide*
  - *Transceiver Guide*

Prepare the installation site

Cabling Infrastructure: Ensure the cabling infrastructure meets the necessary network specifications. See Cabling and technology information for more information.

Installation Location: Before installing the switch, plan its location and orientation relative to other devices and equipment:

- **For HPE Aruba Networking 6200F 12G Class4 PoE 2G/2SFP+ 139W Switch (R8Q72A) and HPE Aruba Networking 6200F 12G Class4 PoE 2G/2SFP+ 139W TAA Switch (R8V13A) models:** In the front or the back of the switch, leave at least 15.24 cm (6 inches) of space for the twisted-pair and fiber-optic cabling.
- **For all other 24- and 48-port models:** In the front or the back of the switch, leave at least 7.6 cm (3 inches) of space for the twisted-pair and fiber-optic cabling.
- In the back of the switch, leave at least 7.6 cm (3 inches) of space for the power cord.
- On the sides of the switch, leave at least 7.6 cm (3 inches) for cooling, except if the switch is installed in an open EIA/TIA rack.

The HPE Aruba Networking 6200F 12G Class4 PoE 2G/2SFP+ 139W Switch (R8Q72A) and HPE Aruba Networking 6200F 12G Class4 PoE 2G/2SFP+ 139W TAA Switch (R8V13A) require more front and back space when used with the optional HPE Aruba Networking CX 6200F 12-port Cable Guard. (To attach the cable guard, see the instruction included with the cable guard unit.)

Figure 17 *Front-to-Back airflow direction of the 6200F/M switches*

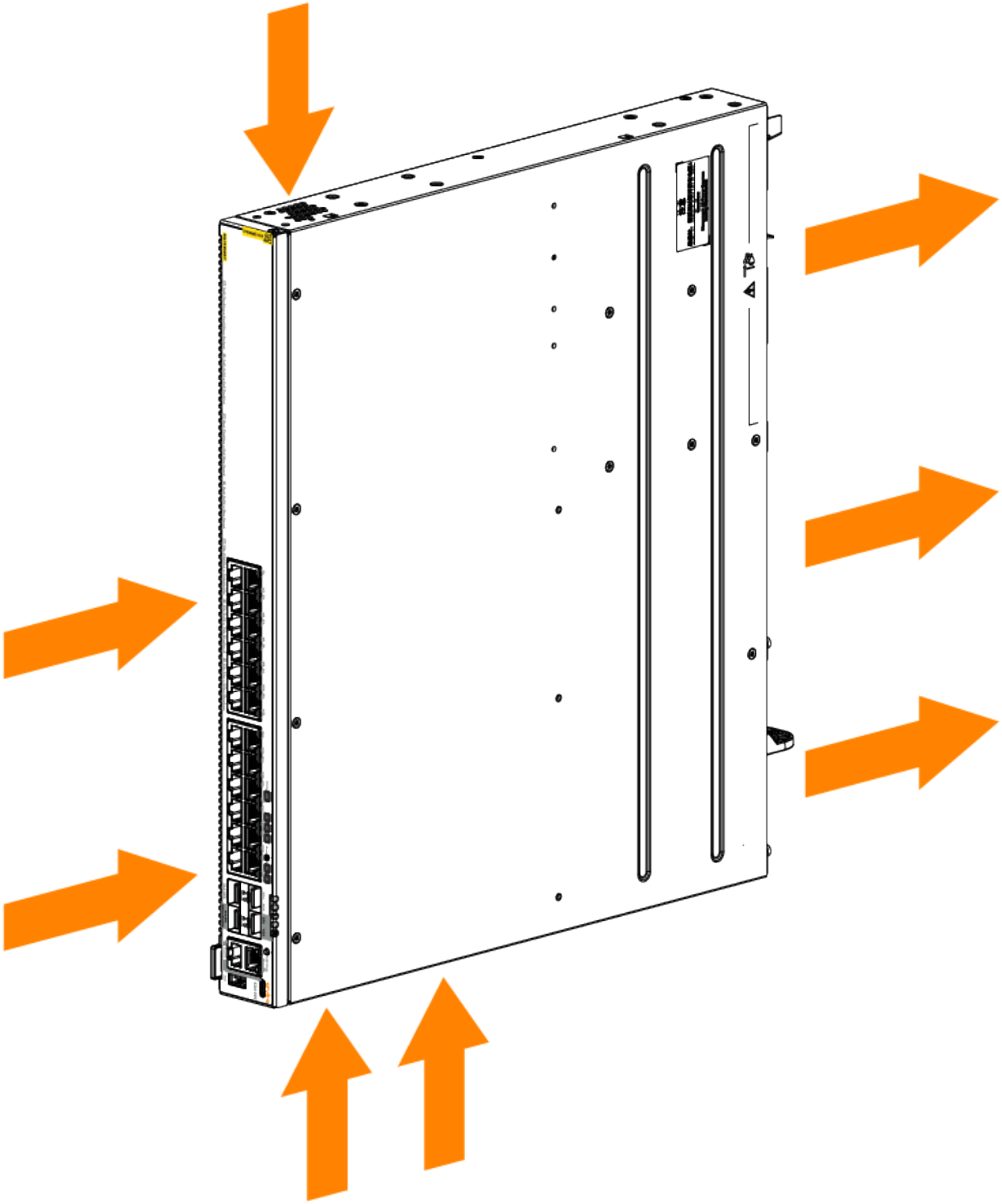

Verify that the switch boots correctly

Before installing the switch in its network location, plug it into a power source and verify that it boots correctly.

1. Connect the power cord supplied with the switch to the power connector on the back of the switch. Then, plug the power cord into a properly grounded electrical outlet.

The switches do not have a power switch. They are powered on when the power cord is connected to the switch and to a power source. For safety, locate the power outlet near the switch installation.

If your installation requires a different power cord than the one supplied with the switch, be sure to use a power cord displaying the mark of the safety agency that defines the regulations for power cords in your country/region. The mark is your assurance that the power cord can be used safely with the switch.

2. Check the LEDs on the switch to make sure the switch is on and operating.

When the switch is powered on, it performs its diagnostic self-test and initialization. This boot process, depending on switch model and configuration, takes approximately 1-2 minutes to complete.

Disconnect power from the switch

Disconnect the power cord from the switch and from the power source.

Install a power supply or a second power supply for modular switches

This section is only applicable to the 6200M switches. Switches in the 6200F family have internal, fixed power supplies.

Refer to this section if replacing a power supply unit.

1. Remove the power supply blank.

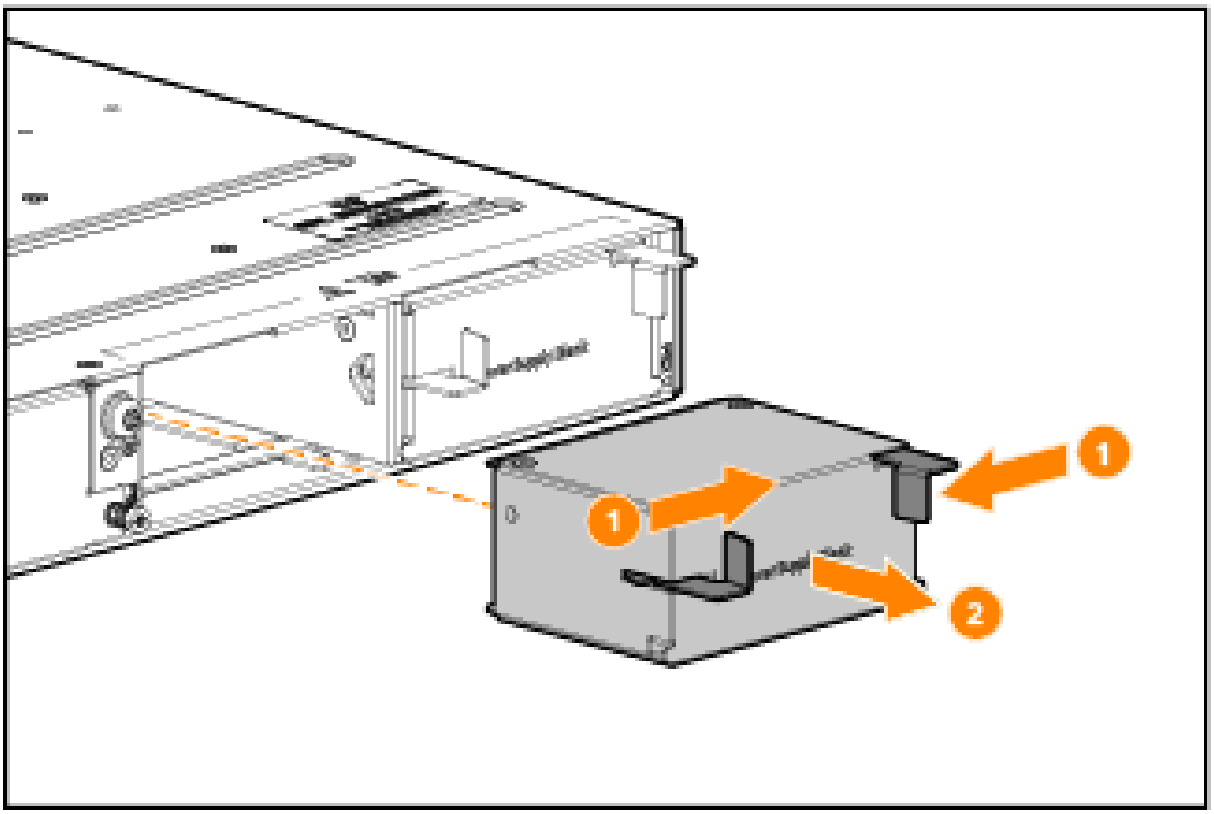

2. Insert the power supply.

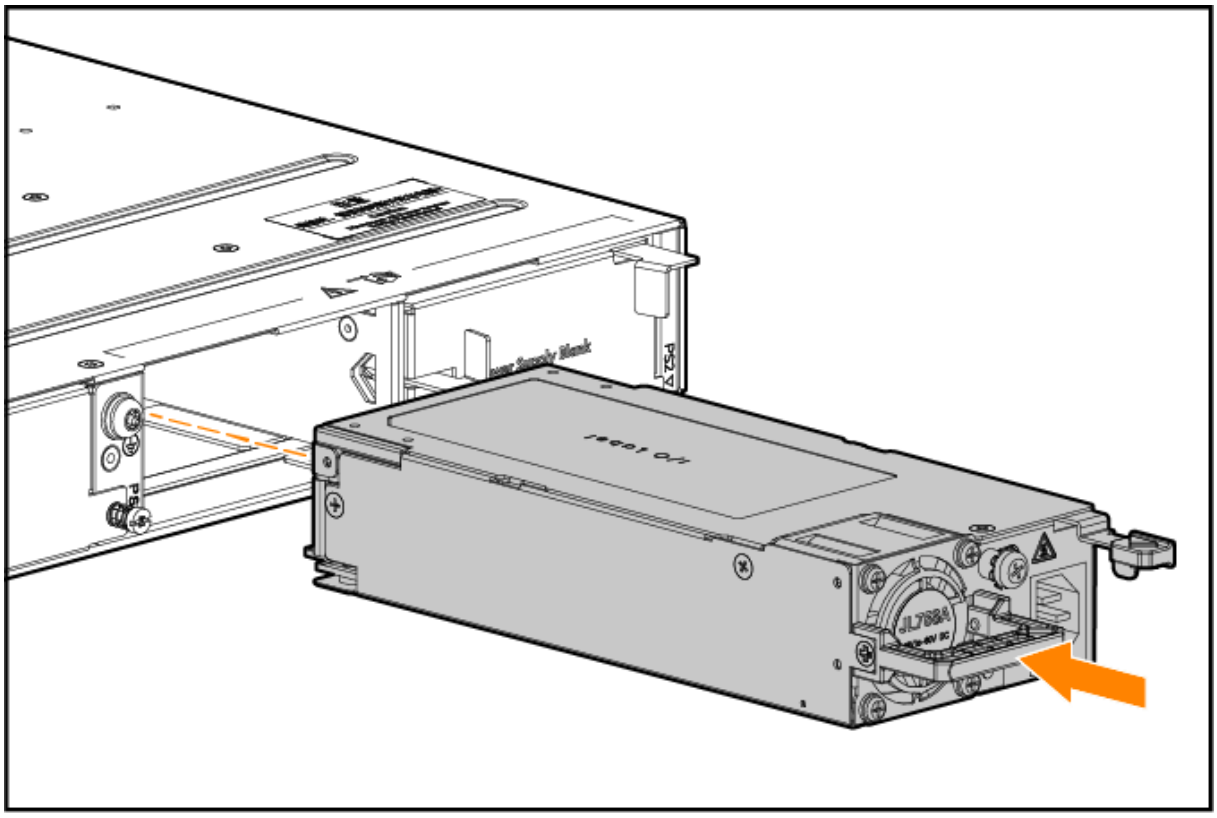

3. Place the unit inside the rack, making sure the PSU is properly and fully inserted into the switch with the latch locked into place.

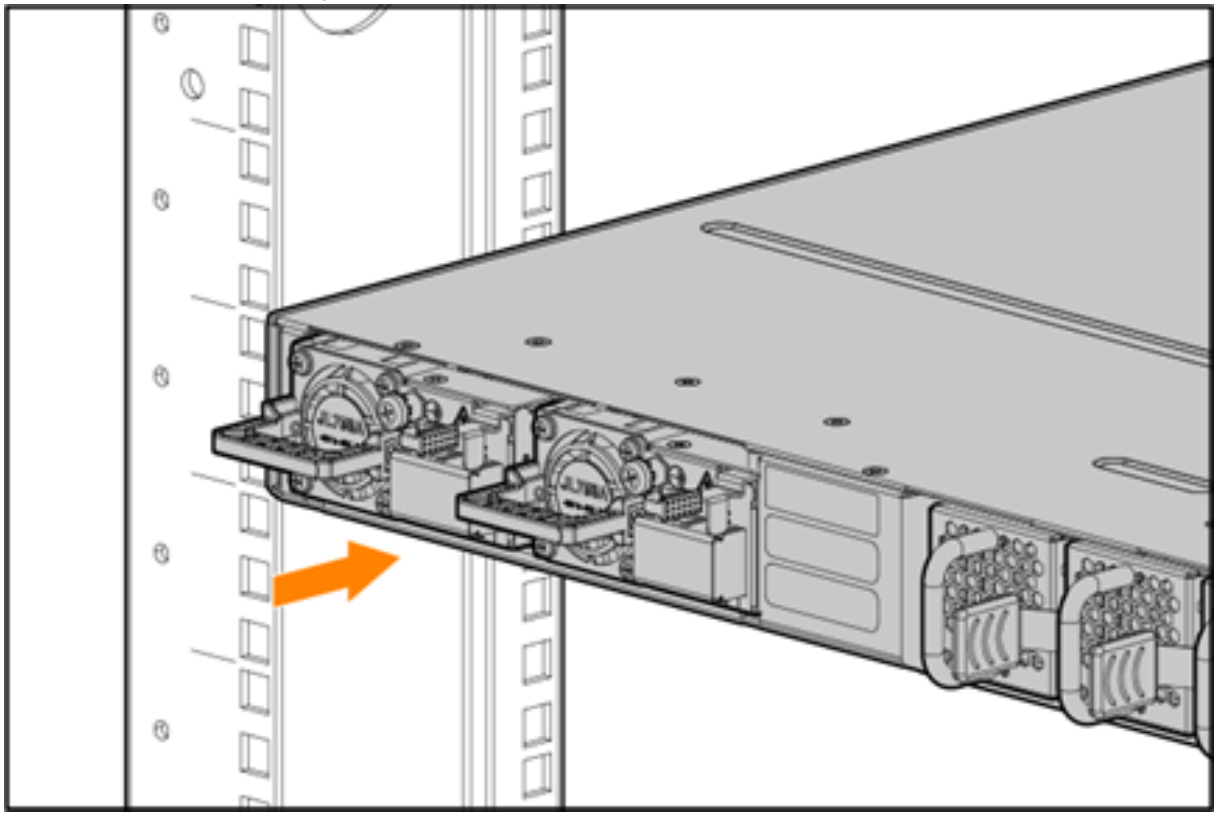

AC power supply

1. Use the supplied AC cable for the power supply and the 6200M switch being installed.
2. Insert the 3-way modular connector of the AC cable into the inlet on the power supply. Ensure that the connectors are firmly mated.
3. Connect the other end of the AC cable to a nearby AC power source.

Verify the switch boots correctly

Before installing the switch in its network location, plug it into a power source and verify that it boots correctly.

Procedure

1. Connect the power cord supplied with the switch to the power connector on the back of the switch. Then plug the power cord into a properly grounded electrical outlet.



The switches do not have a power switch. They are powered on when the power cord is connected to the switch and to a power source. For safety, locate the power outlet near the switch installation.
If your installation requires a different power cord than the one supplied with the switch, be sure to use a power cord displaying the mark of the safety agency that defines the regulations for power cords in your country/region. The mark is your assurance that the power cord can be used safely with the switch.

2. Check the LEDs on the switch to make sure the switch is on and operating.

   When the switch is powered on, it performs its diagnostic self-test and initialization. This boot process, depending on switch model and configuration, takes approximately 1-2 minutes to complete.

Disconnect power from the switch

Disconnect the power cord from all of the switch power supplies and from the power sources.

Mount the switch

After the switch passes self-test, it is ready to be mounted in a stable location. Supported mounting options for the HPE Aruba Networking 6200 F/M switches include:

- Two-post rack mount
- Tabletop or desktop
- Four-post rack mount (Requires the optional HPE Aruba Networking X414 1U Universal 4-post Rack Mounting Kit (J9583B)



Do not mount the switch on a wall, under a table, or under another horizontal surface.

Ne montez pas le commutateur de réseau sur un mur, sous une table ou sous toute autre surface horizontale.

Mounting a switch on a tabletop or desktop

Before you begin:

- Locate the four self-adhesive pads included in the switch accessory kit.
- Select a secure horizontal surface where the network cables and switch power cord will not create a tripping hazard.

To mount the switch to a tabletop or desktop:

1. Attach the four self-adhesive pads to the bottom corners of the switch.

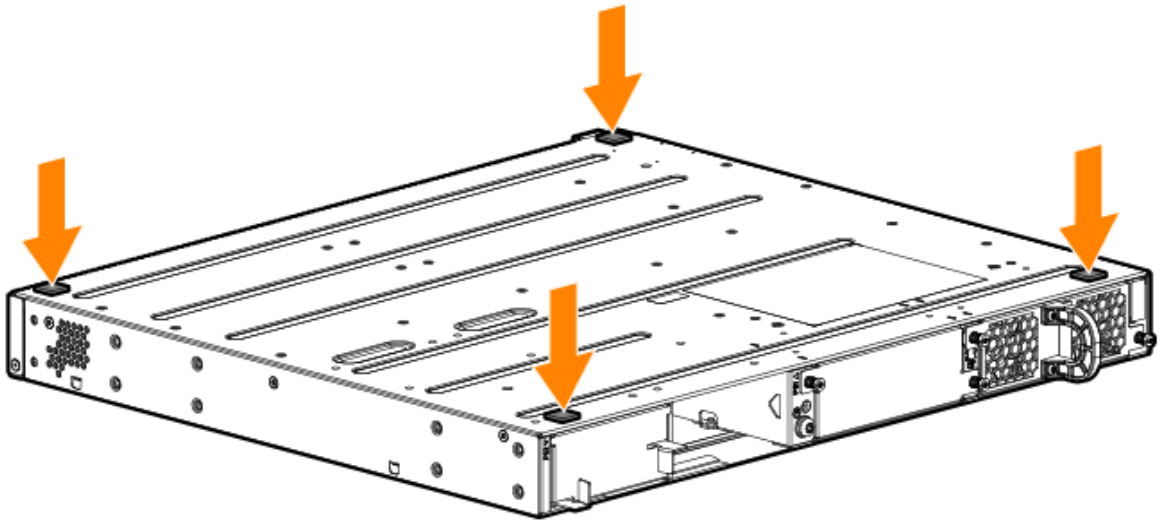

2. Position the switch with the top panel up on the selected horizontal surface.

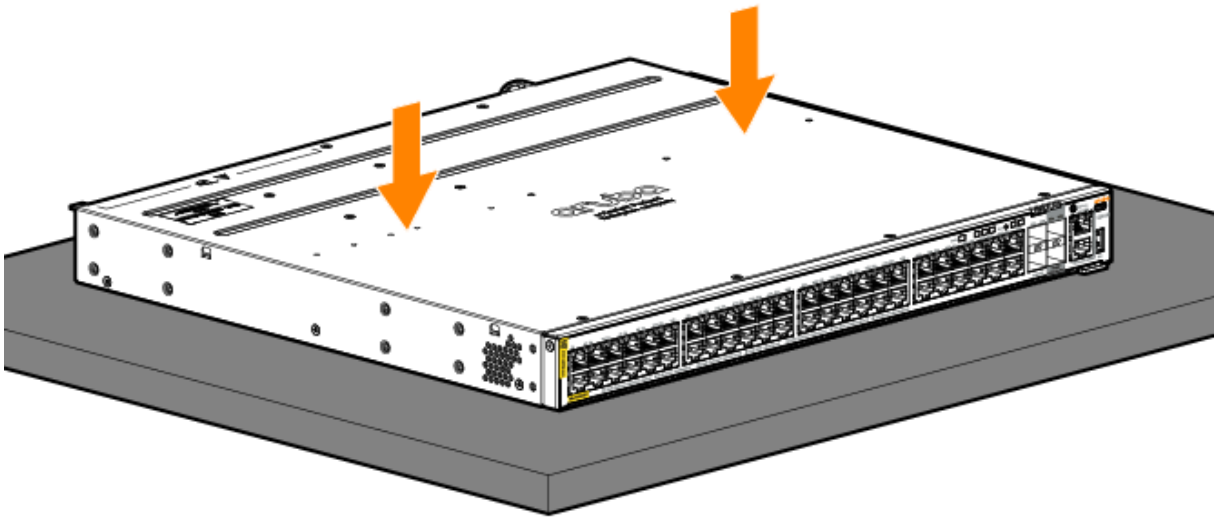

Ensure that the power cord and network cables at switch mounting location will not create a tripping hazard.

Avoid blocking any ventilation openings on the sides, rear, or front of the switch.

Évitez d'obstruer les évents situés sur les côtés, à l'arrière ou à l'avant du commutateur réseau.

Mounting the switch in a two-post rack

Before you begin, prepare your network data cables (not included) for connecting the switch to the network.

The 24-port and 48-port switches can also be mounted in 4-post racks and cabinets by using the HPE Aruba Networking X414 1U Universal 4-post Rack Mounting Kit (J9583B). For instructions on using the kit, see the documentation included with the kit.

24-port and 48-port switches

To mount the switch in a two-post rack:

1. Attach the rack mount brackets to the switch by using a #1 Phillips (cross-head) screwdriver and the supplied eight 8-mm M4 screws.

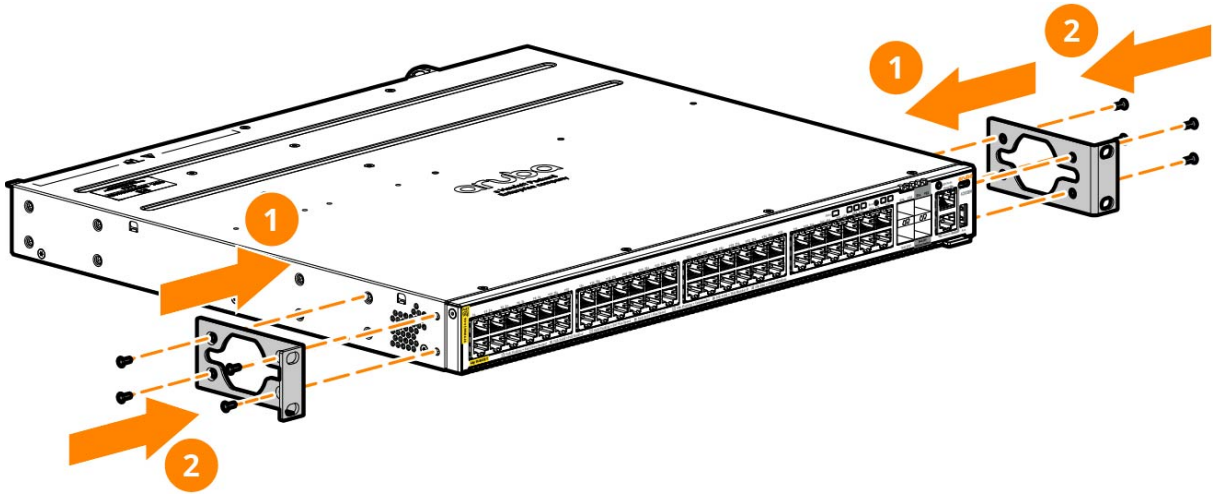

For safe, reliable installation, only use screws provided in the accessory kit to attach the mounting brackets to the switch.

2. Use the four number 12-24 screws to secure the brackets to the rack.

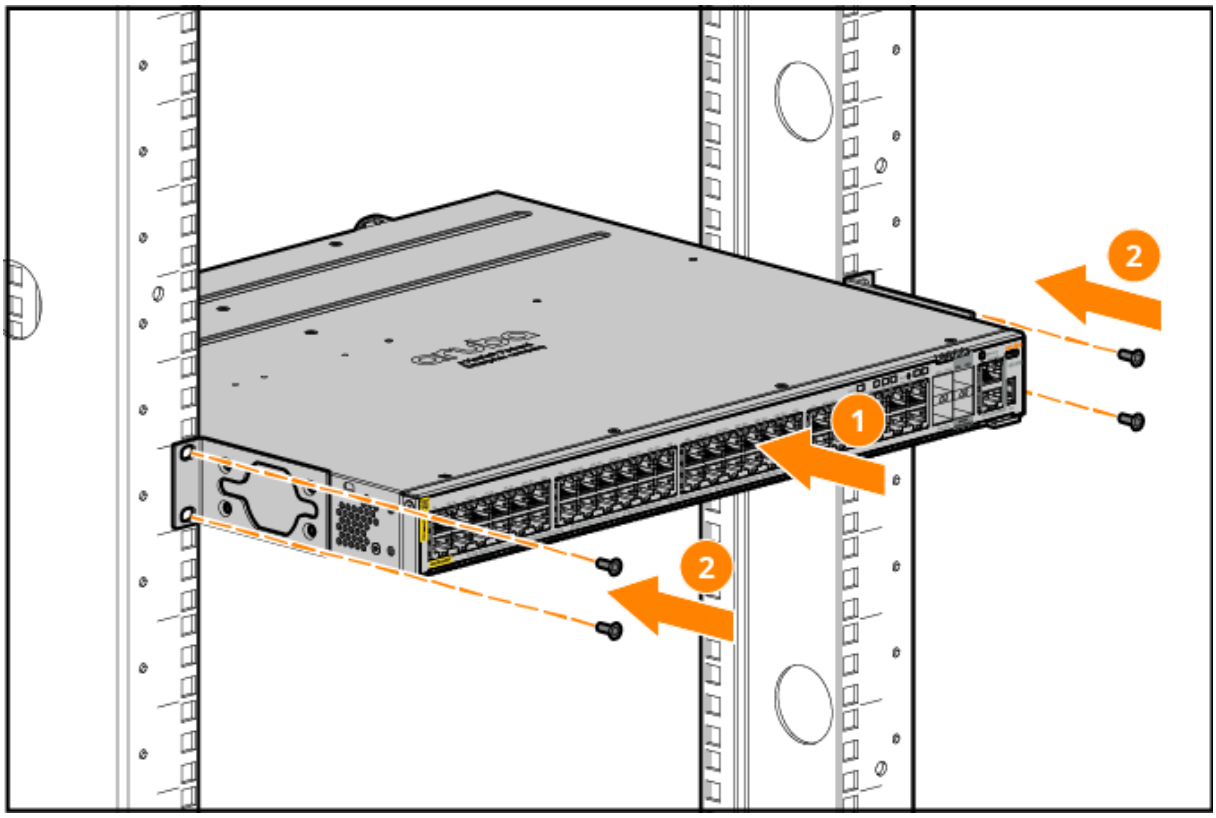

12-port switch

1. Attach the long rack mounting brackets to the switch with the included 10-mm M4 screws. Brackets can also be oriented in two settings: 1) flush or 2) offset with the switch front panel. Mounting brackets can also be attached at the middle of the switch.

Figure 18 *Attaching brackets to the switch (flush orientation)*

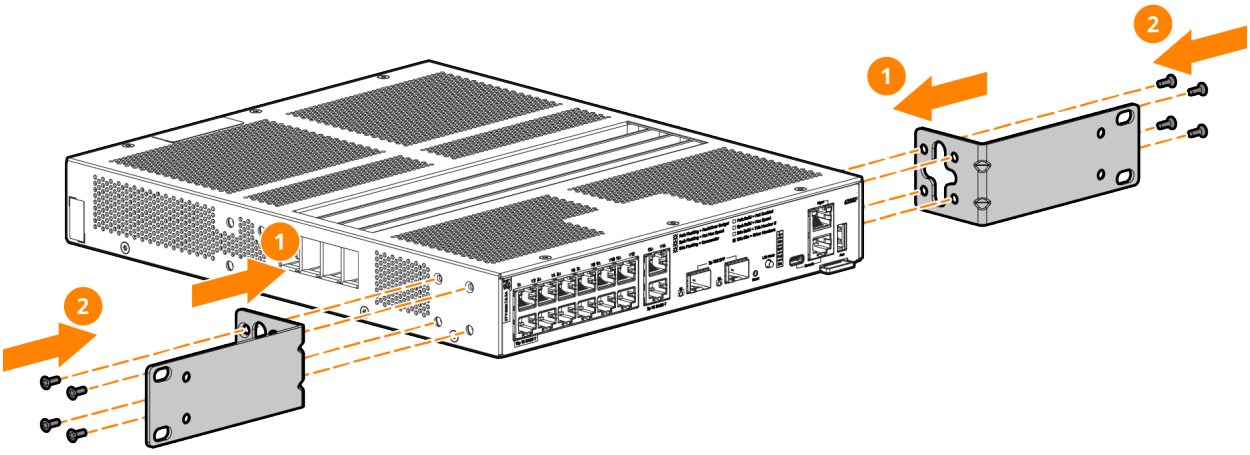

Figure 19 *Attaching brackets to the switch (offset orientation)*

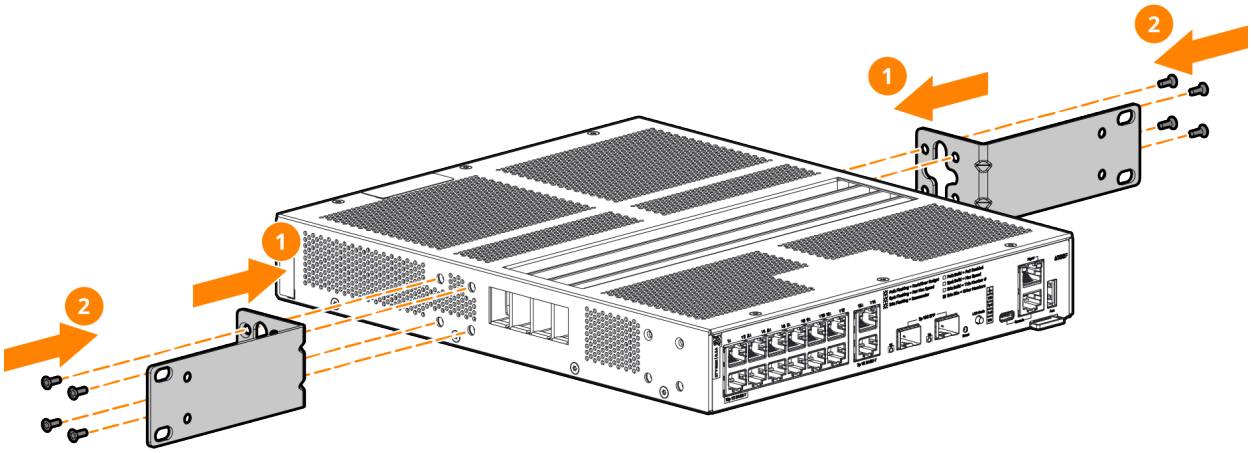

2. Secure the rack mounting brackets to a two-post rack.

Figure 20 *Mounting in a two-post rack (flush orientation)*

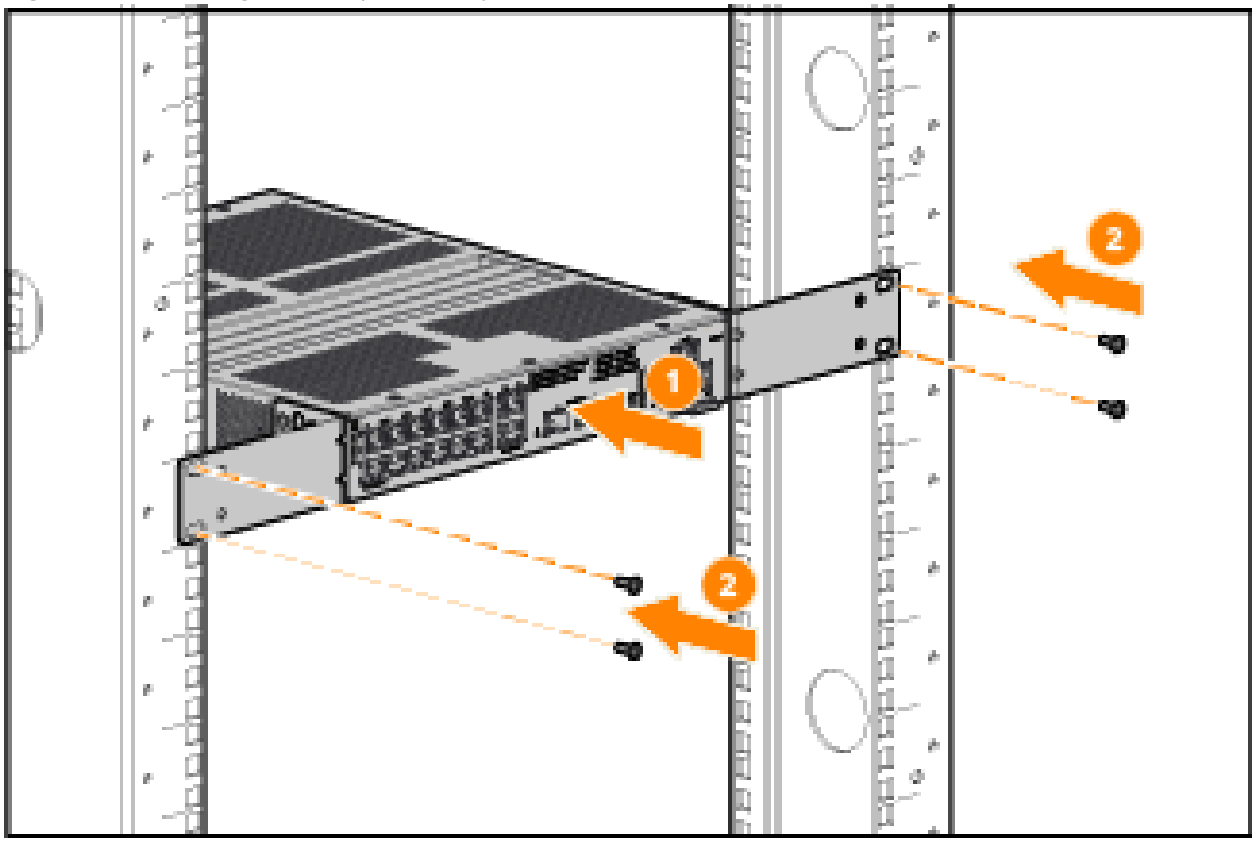

Figure 21 *Mounting in a two-post rack (offset orientation)*

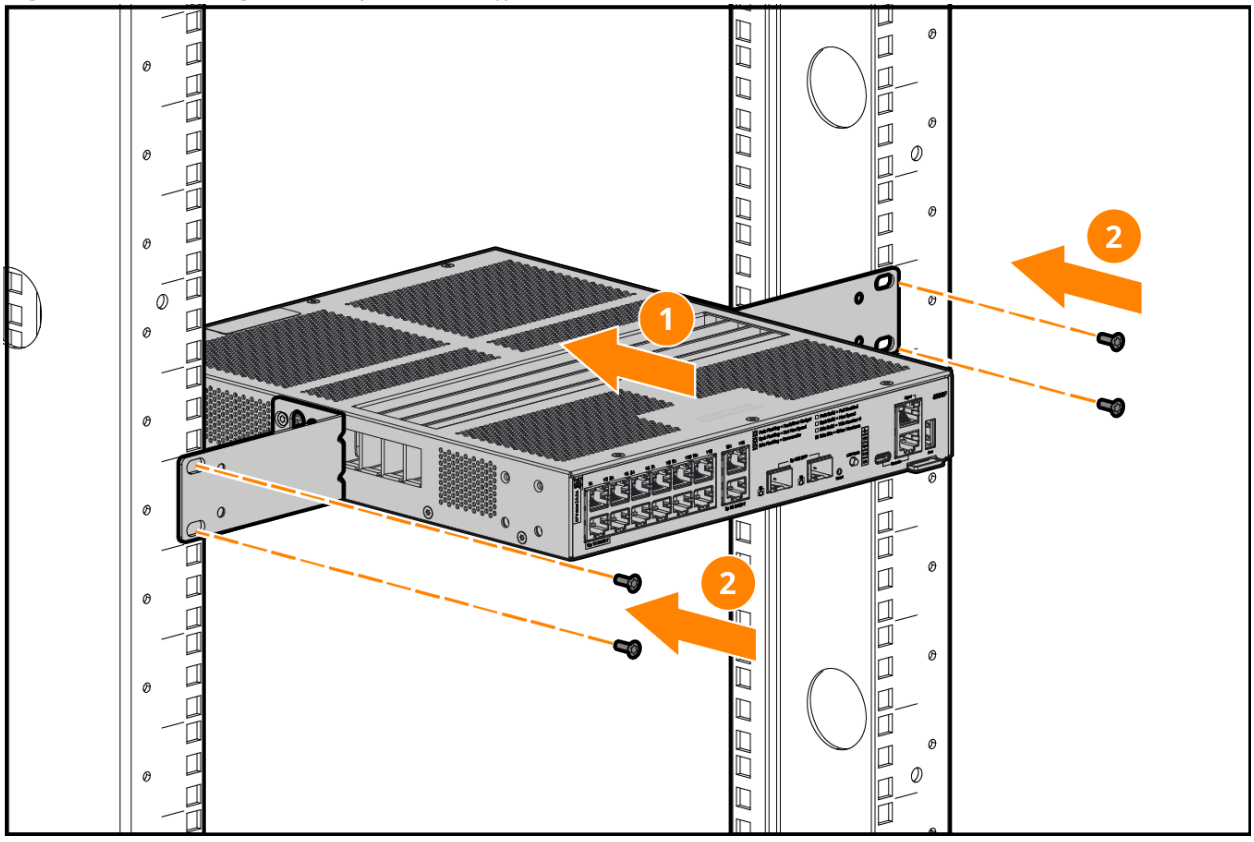

Horizontal surface mounting

Place the switch on a table or other horizontal surface. The switch comes with rubber feet in the accessory kit that can be used to help keep the switch from sliding on the surface.

Attach the rubber feet to the four corners on the bottom of the switch within the embossed angled lines. Use a sturdy surface in an uncluttered area. You may want to secure the networking cables and switch power cord to the table leg or other part of the surface structure to help prevent tripping over the cords.

Figure 22 *Mounting 12-port switch on horizontal surface*

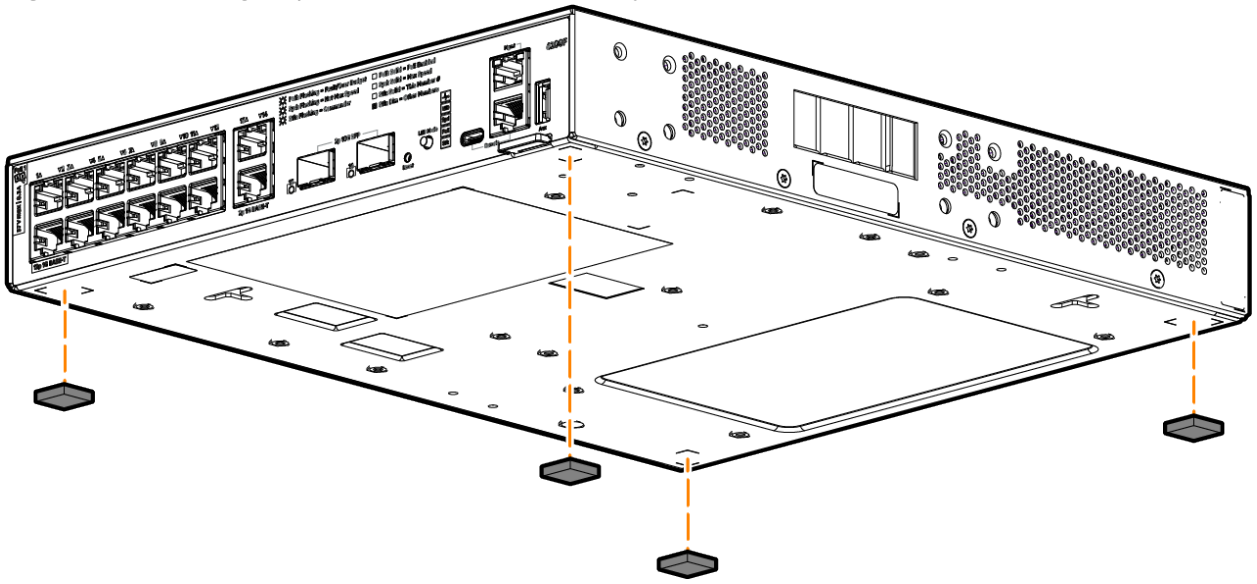

Wall mounting 12-port switches

The HPE Aruba Networking CX 6200F 12G Class4 PoE 2G/2SFP+ 139W Switch (R8Q72A) and the HPE Aruba Networking 6200F 12G Class4 PoE 2G/2SFP+ 139W TAA Switch (R8V13A) are fan-less and rely on natural convection to maintain proper operating temperature.

The HPE Aruba Networking CX 6200F 12G Class4 PoE 2G/2SFP+ 139W Switch (R8Q72A) and the HPE Aruba Networking 6200F 12G Class4 PoE 2G/2SFP+ 139W TAA Switch (R8V13A) can **only** be mounted with ports facing left, right, or downward.

Mounting the switch with ports facing upward is not supported.

Il est impossible de monter le commutateur réseau en orientant les ports vers le haut.

Figure 23 *Ports facing left*

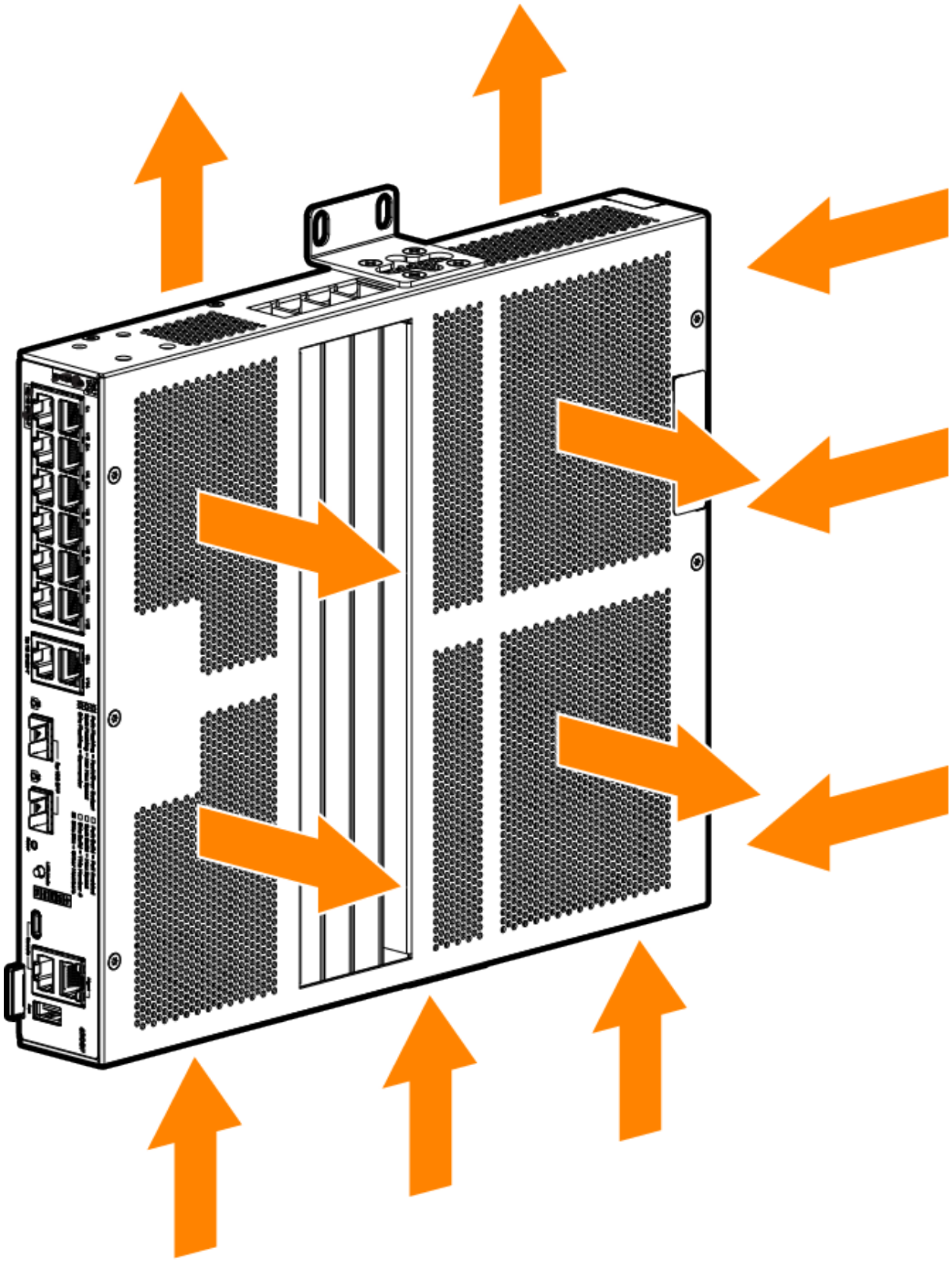

Figure 24 *Ports facing right*

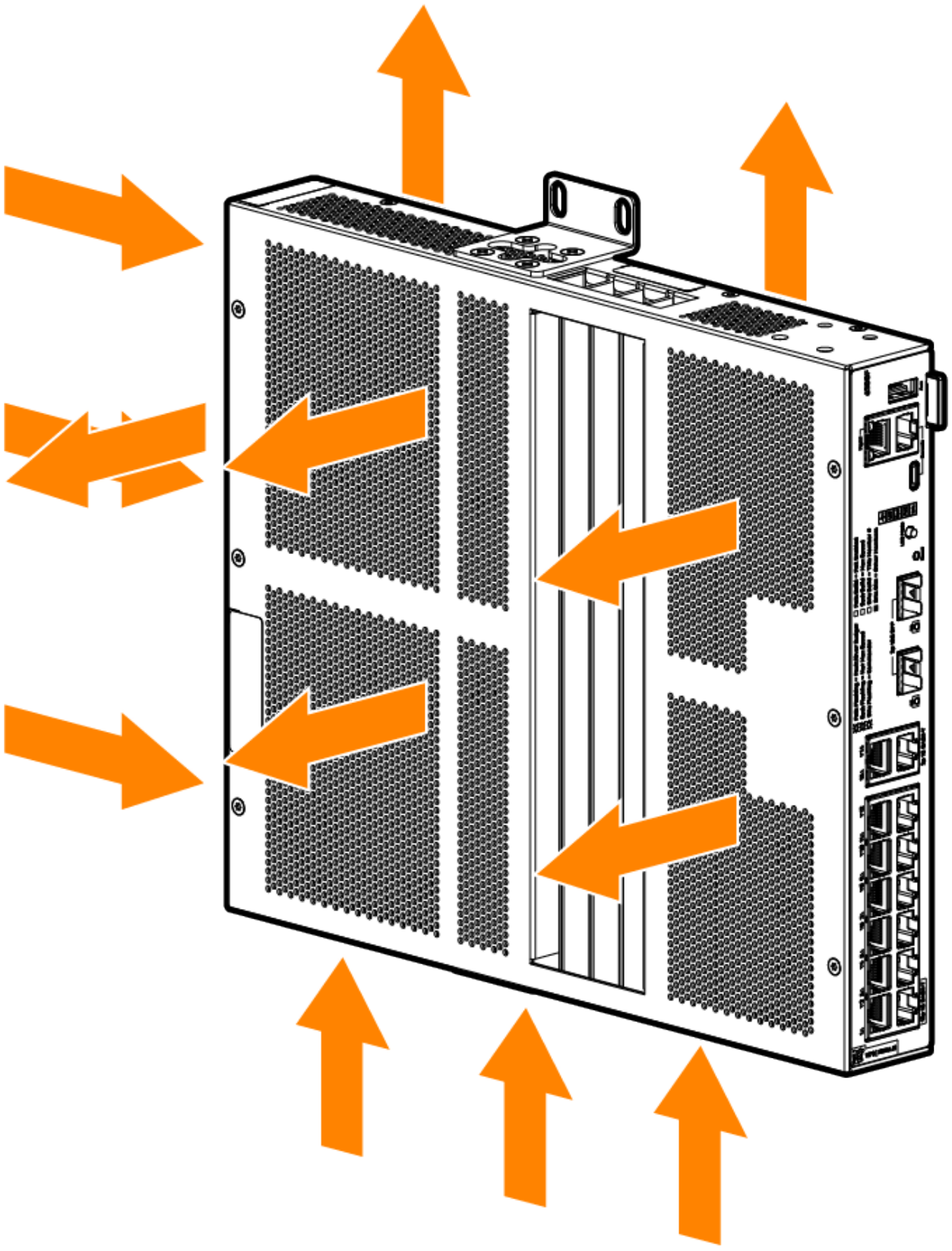

Figure 25 *Ports facing downward*

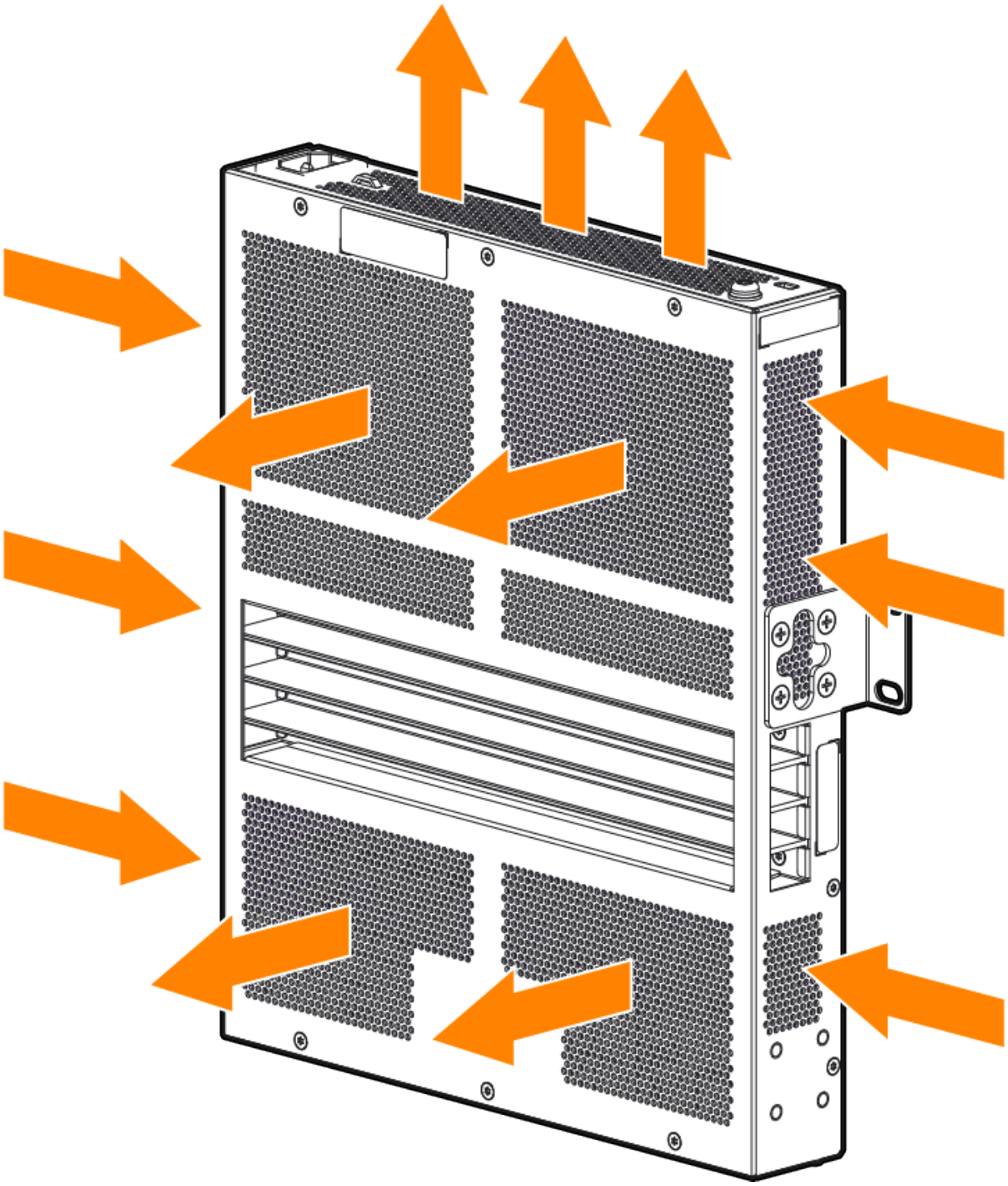

Both the HPE Aruba Networking CX 6200F 12G Class4 PoE 2G/2SFP+ 139W Switch (R8Q72A) and the HPE Aruba Networking 6200F 12G Class4 PoE 2G/2SFP+ 139W TAA Switch (R8V13A) ship with a wall mounting bracket to support a more robust wall mount.

The switch is designed to support mounting in a 12-inch (304.8 cm)-wide enclosure with a top and bottom air opening. Natural convection with at least a 40 LFM airflow is required in this configuration.

To mount the switch, use either the mounting brackets or mounting holes provided on the bottom of the switch.



For safe operation, read Installation precautions and guidelines before mounting the switch.

Pour garantir une utilisation sécurisée, lisez la rubrique Précautions et directives d'installation avant de monter le commutateur réseau.



The switch should be mounted only to a wall or wood surface that is at least 1/2-inch (12.7 mm) plywood or its equivalent.

Veillez à monter le commutateur réseau uniquement sur un mur ou une surface en bois ou en contreplaqué (ou équivalent) d’au moins 12,7 mm (1/2 po).

Mounting brackets

To mount the 12-port switch to the wall:

1. Determine and mark screw hole locations by positioning the switch where it will be installed.
2. Drill four holes in the wall.
3. Use a #1 Phillips (cross-head) screwdriver and attach the mounting brackets to the switch with the included 10-mm M4 screws.
4. Mount the switch to the wall using four screws (not included), applicable for the type of wall being used.

Figure 26 *Mounting switch to the wall*

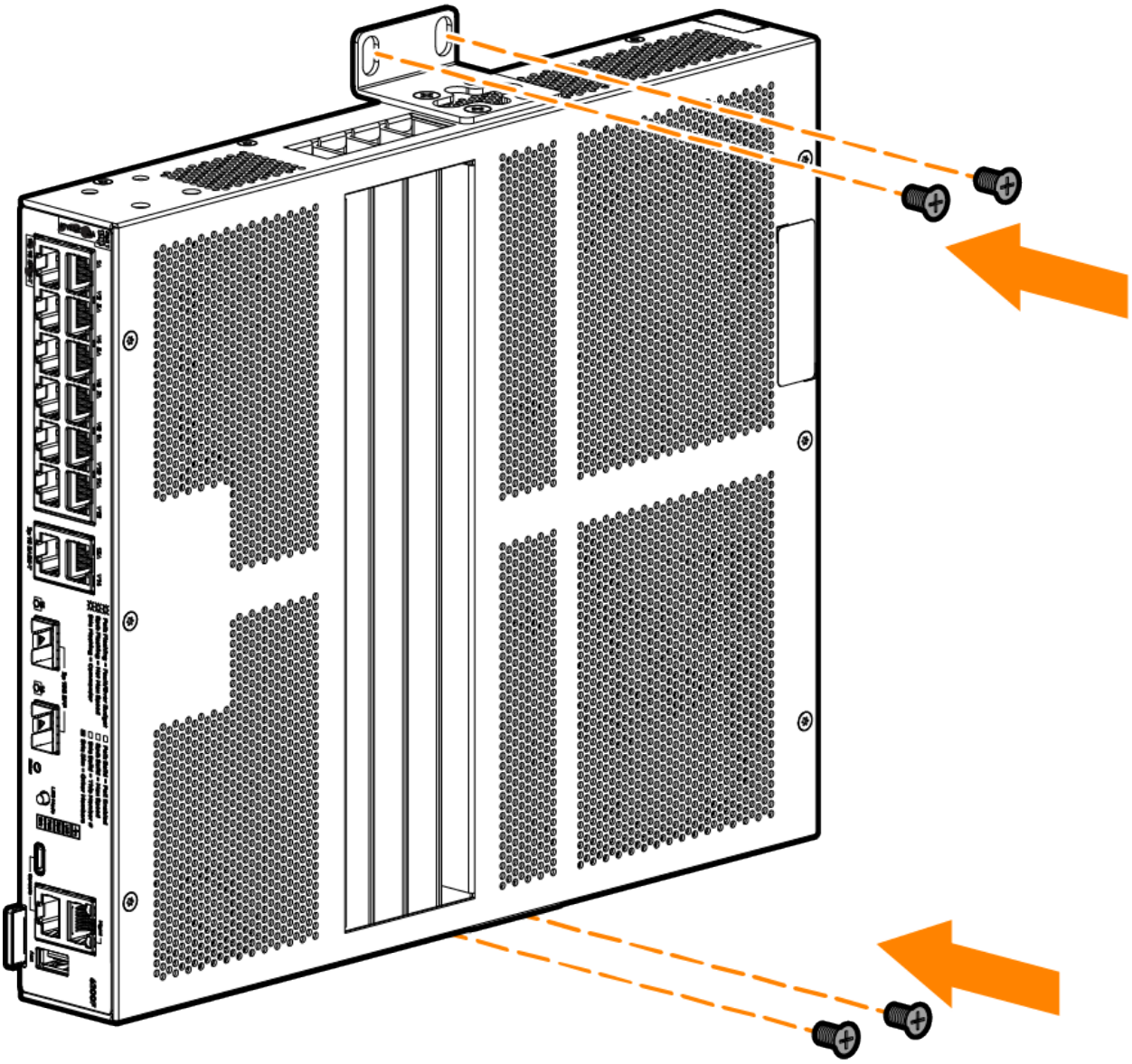

Mounting holes

To mount the HPE Aruba Networking CX 6200F 12G Class4 PoE 2G/2SFP+ 139W Switch (R8Q72A) and the HPE Aruba Networking 6200F 12G Class4 PoE 2G/2SFP+ 139W TAA Switch (R8V13A) using the holes located on the bottom of the switch, follow these steps:

1. In the required location, mark the position for the mounting screws. The hole-to-hole distance is 7 inch (178 mm) (x-axis) and 5.8 inch (147 mm) (y-axis).
2. Use two screws with heads sized correctly for the mounting holes and with sufficient strength to hold the switch to the wall. Set the screw heads s approximately 2 mm away from the mounting surface to allow the switch to slide onto the screws.

Figure 27 *Attaching screws into wall*

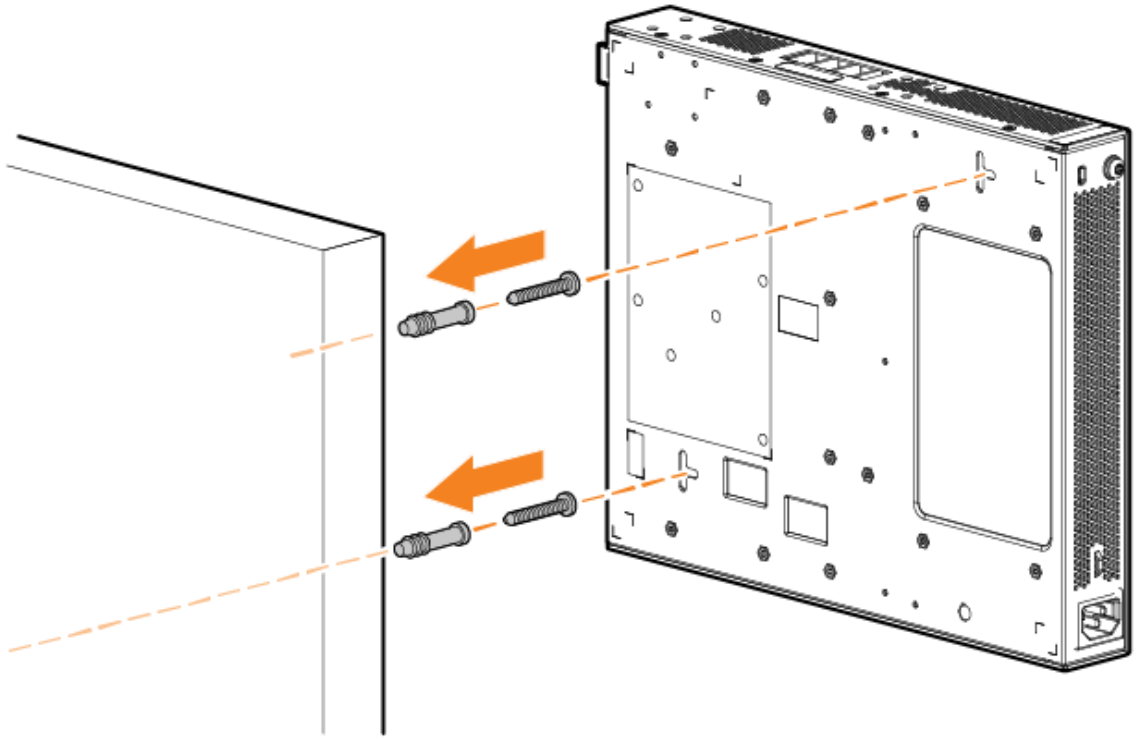

Under-table mounting for 12-port switch

Position the switch with its top facing upward. Inverting the switch (top vents facing downward) in an under-table mounting, reduces ventilation from inside the switch and is not supported.

The switch must be secured using the long rack mount brackets (included) that provide a 3" (76.2 mm) gap between the top of the switch and the underside of the table top.

1. Attach the long (rack/table) mounting brackets to the switch.
2. Secure the rack/table mounting brackets to the underside of the table/horizontal surface.

Figure 28 *Securing switch to under-table surface*

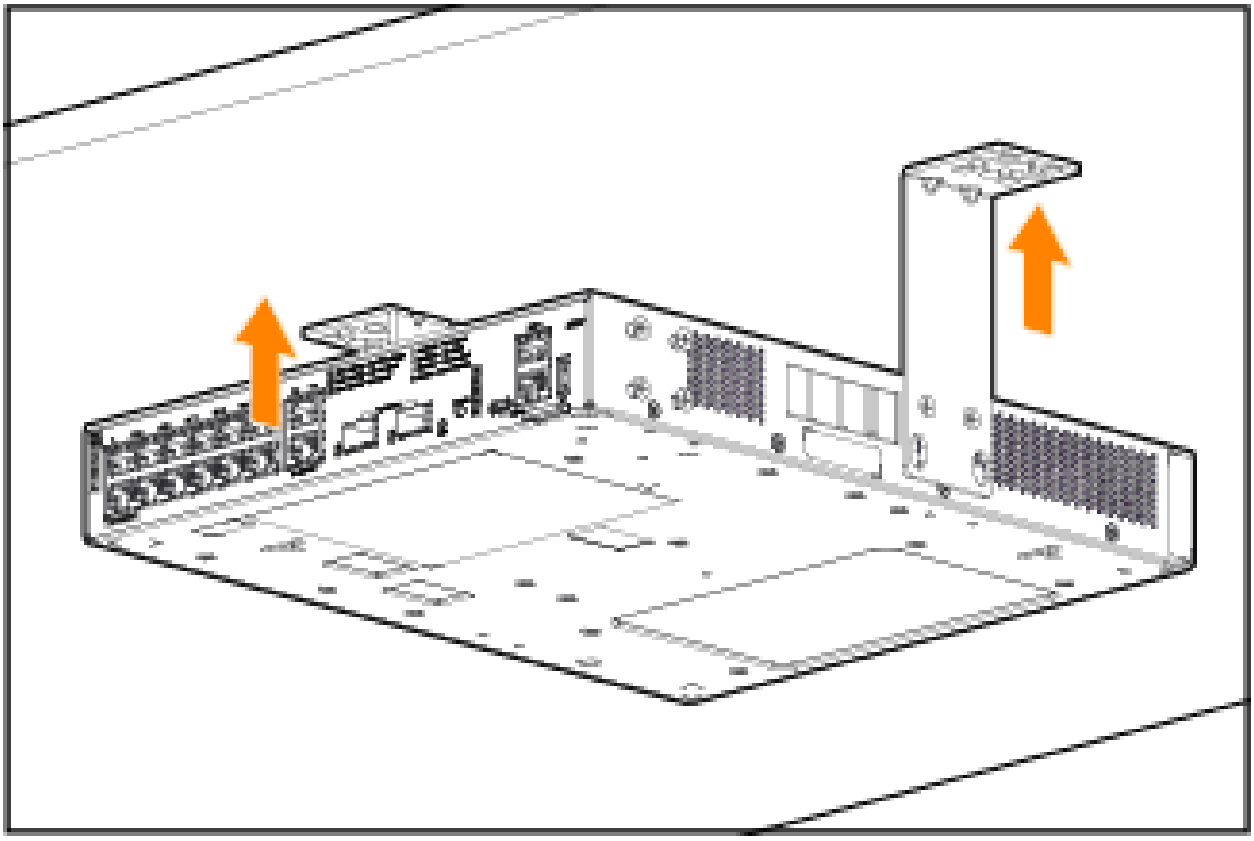

Connect the switch to a power source

1. Plug the included power cord into the power connector on the switch and into a nearby AC power source.
2. Recheck the LEDs during self-test.

Mounting the switch in a four-post rack

The four-post rack mount for the switches requires the optional HPE Aruba Networking X414 1U Universal 4-post Rack Mounting Kit (J9583B). To use this kit to mount a switch, see the installation instructions provided with the kit.

Connect the switch to a power source

For AC power supplies: Plug the included power cord into the power connector on the switch and into a nearby AC power source.

Recheck the LEDs during self-test.

Install transceivers (optional)

You can install or remove transceivers from the slots on the front of the switch without having to power off the switch.

- The transceivers operate only at full duplex. Half duplex operation is not supported.
- Ensure that the network cable is NOT connected when you install or remove a transceiver.

(Optional) Insert up to four SFP transceivers in the fixed transceiver slots on the switch front panel.

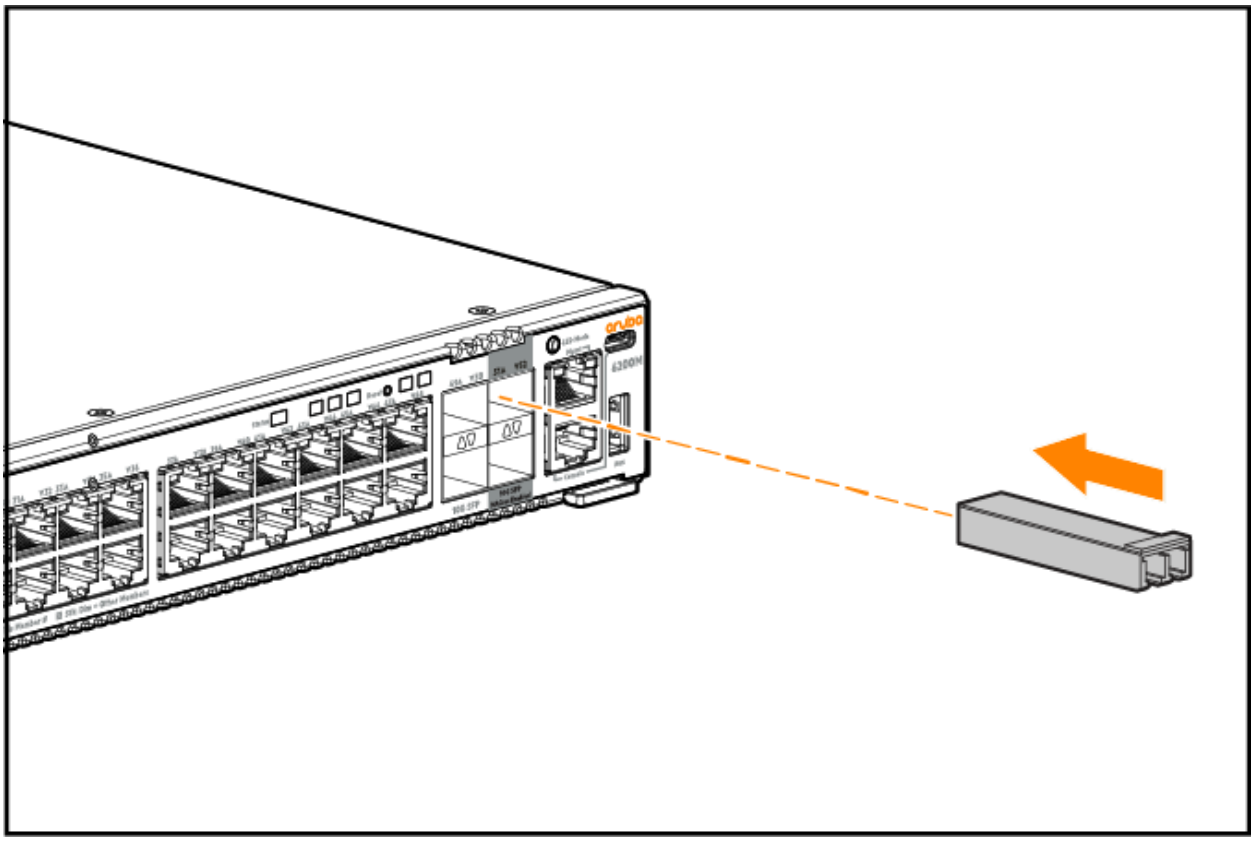

Connect network cables

Connect network cables from network devices or your patch panels to the fixed RJ-45 ports and to any installed transceivers.

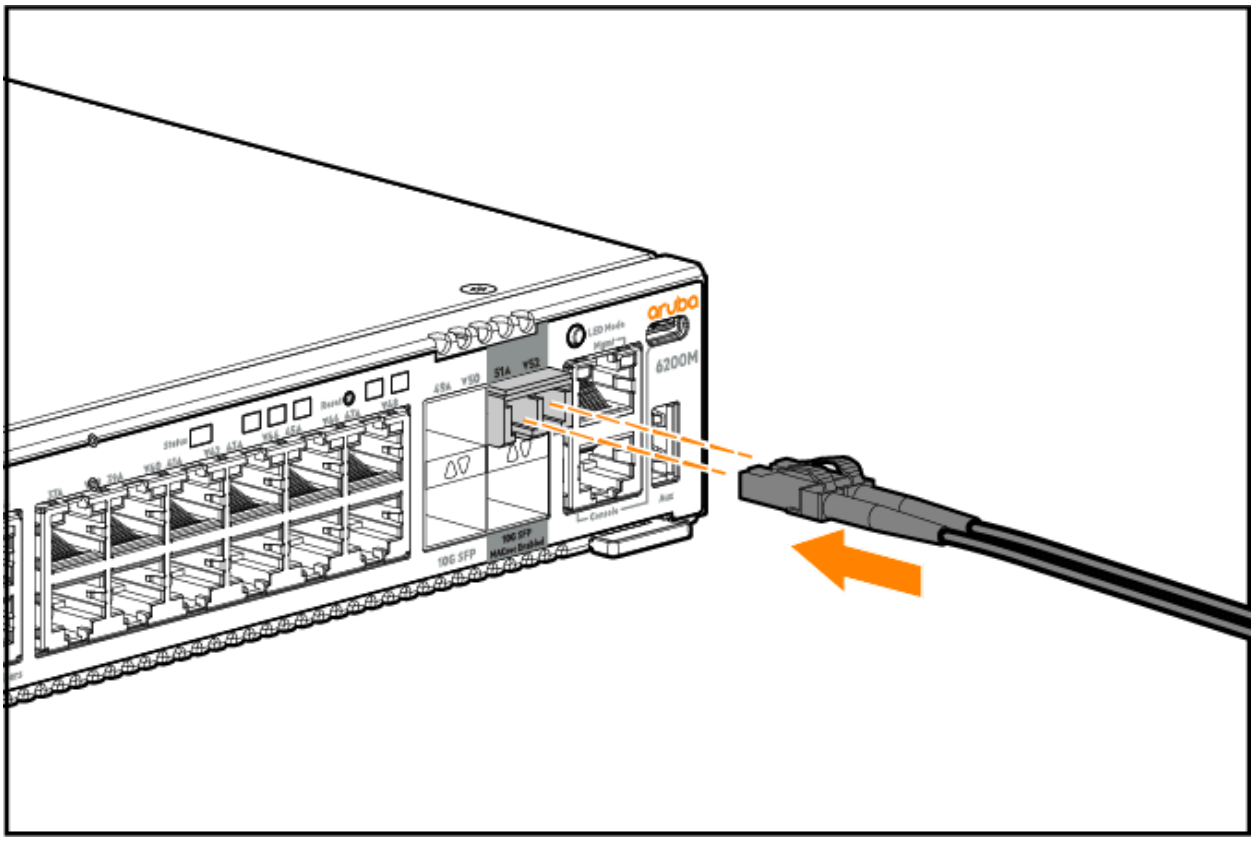

Connect network cables to the RJ-45 data ports and to any optional transceivers installed on the switch front panel.

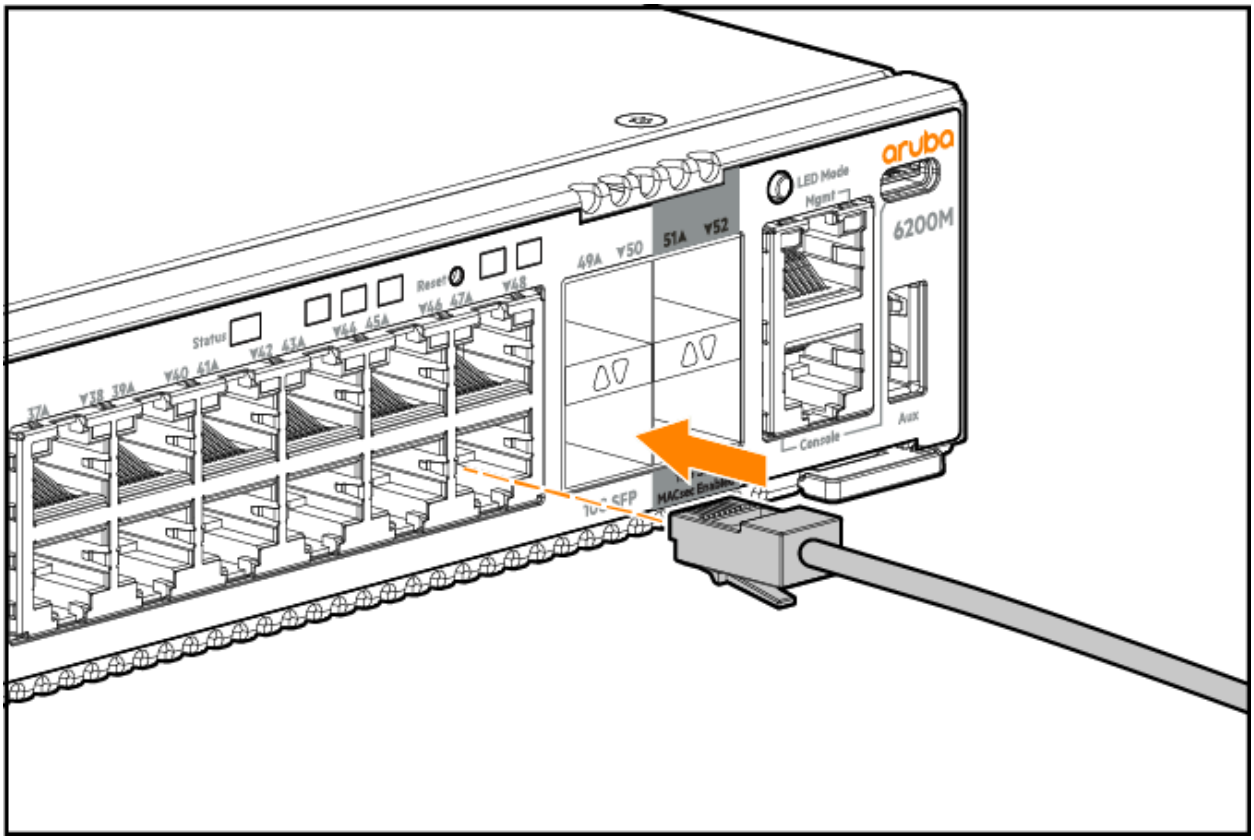

SFP/SFP+ installation notes



When selecting a fiber SFP/SFP+ device, make sure it can function at a maximum temperature that is not less than the recommended maximum operational temperature of the product. Use only an approved Class 1 Laser Product SFP/SFP+ transceiver.
To ensure proper operation of your switch, use only the HPE Aruba SFP/SFP+ transceivers supported by your switch.

Use only supported HPE Aruba Networking SFP/SFP+ transceivers

Non HPE Aruba Networking SFP/SFP+ transceivers are not supported. Use of supported HPE Aruba Networking products ensures that your network maintains optimal performance and reliability. If you require additional transceivers, contact an HPE Aruba Networking sales representative or an authorized reseller. The following resources can help you to find transceiver support information for your switch model:

- See the *Transceiver Guide*.
- See the supported transceivers information in the Data Sheet for your switch model.

Hot swapping SFP/SFP+ transceivers

Supported SFP/SFP+ transceivers that you can install in your HPE Aruba Networking switch can be “hot swapped”– removed and installed while the switch is receiving power. However, disconnect the network cables from the SFP/SFP+ transceivers before hot-swapping them.

When you replace a SFP/SFP+ transceiver with another transceiver of a different type, the switch may retain selected port-specific configuration settings that were configured for the replaced unit. Be sure to validate or reconfigure port settings as required.

SFP/SFP+ connections to devices with fixed speed/duplex configurations

When connecting a device to your switch port that contains a SFP/SFP+ transceiver, the speed and duplex settings of the switch port and the connected device must match. Otherwise, the device may not link properly—you may not get a link. For some older network devices, the default speed/duplex settings may be predefined such that they are set differently from the default configuration of your switch. (For example, 1000 Mbps/Full Duplex.) These setting differences may also apply to some older Hewlett Packard Enterprise devices. Because of these default speed/duplex considerations, make sure that devices connected to your SFP/SFP+ ports are properly configured. At a minimum, make sure the configurations match.

This chapter is a guide for using the console Switch Setup screen to quickly assign an IP address and subnet mask to the switch. You can also set a Manager password and, optionally, configure other basic features.

For more information on using the switch console, see the *Fundamentals Guide* for your switch model.

Recommended minimal configuration

In the factory default configuration, the switch has no IP address and subnet mask, and no passwords. In this state, it can be managed only through a direct console connection. To manage the switch through in-band (networked) access, configure the switch with an IP address and subnet mask compatible with your network. See the *Fundamentals Guide* for your switch for more information on the various methods that can be used for initial configuration.

Also, configure a Manager password to control access privileges from the console and web browser interface. Other parameters in the Switch Setup screen can be left at either their default settings or settings you manually enter.

Many other features can be configured through the switch console interface to optimize performance, to enhance your control of the network traffic, and to improve network security. Once an IP address has been configured on the switch, these features can be accessed more conveniently through a remote Telnet session, through the switch web browser interface, and from an SNMP network management station running a network management program. For a list of switch features available with and without an IP address, see the latest version of the *Fundamentals Guide* for your switch.

Setup for initial configuration

For initial configuration information, see the *Fundamentals Guide* for your switch.

Chapter 4
Replacing components

This chapter describes how to remove and install the following components in the HPE Aruba Networking 6200M Switch Series:

- Power supply(ies)
- Fan tray

There are no user-replaceable parts on the HPE Aruba Networking 6200F Switch Series.

The 6200M switches and their components are sensitive to static discharge. Use an antistatic wrist strap and observe all static precautions when replacing components.
If a power supply must be removed, and then reinstalled, wait at least 5 seconds before re-installation. Otherwise, damage to the switch may occur. The power supply needs this time to bleed off any retained power.

Les commutateurs réseau 6200M et leurs composants sont sensibles aux décharges statiques. Utilisez un bracelet antistatique et respectez toutes les précautions concernant l'électricité statique lors du remplacement des composants.
En cas de retrait et de réinstallation d'un bloc d'alimentation, attendez au moins 5 secondes avant la réinstallation. Dans le cas contraire, vous risquez d'endommager le commutateur. Ce délai est en effet nécessaire pour évacuer le courant résiduel.

Replacing the fan

If a fan has failed, the fan LED will flash simultaneously with the switch Fault LED. Replace the failed component as soon as possible.

This section is only applicable to 6200M switches.

To Remove an Existing Fan:

1. Loosen the T10 screws by turning counter clockwise.
2. Grasping the pull handle of the failed fan, remove the component.- replace image

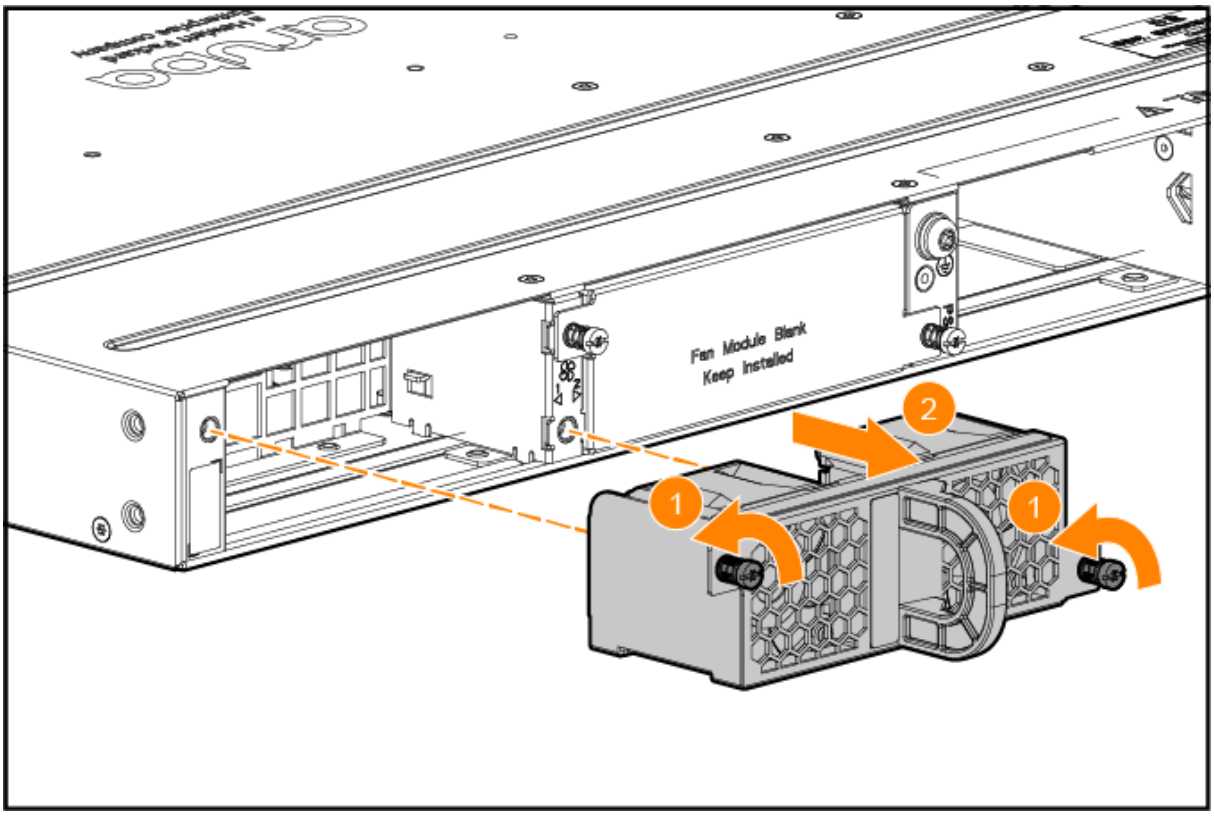

3. Insert the new fan by sliding the component all the way and tighten the T10 screws by turning them clockwise.

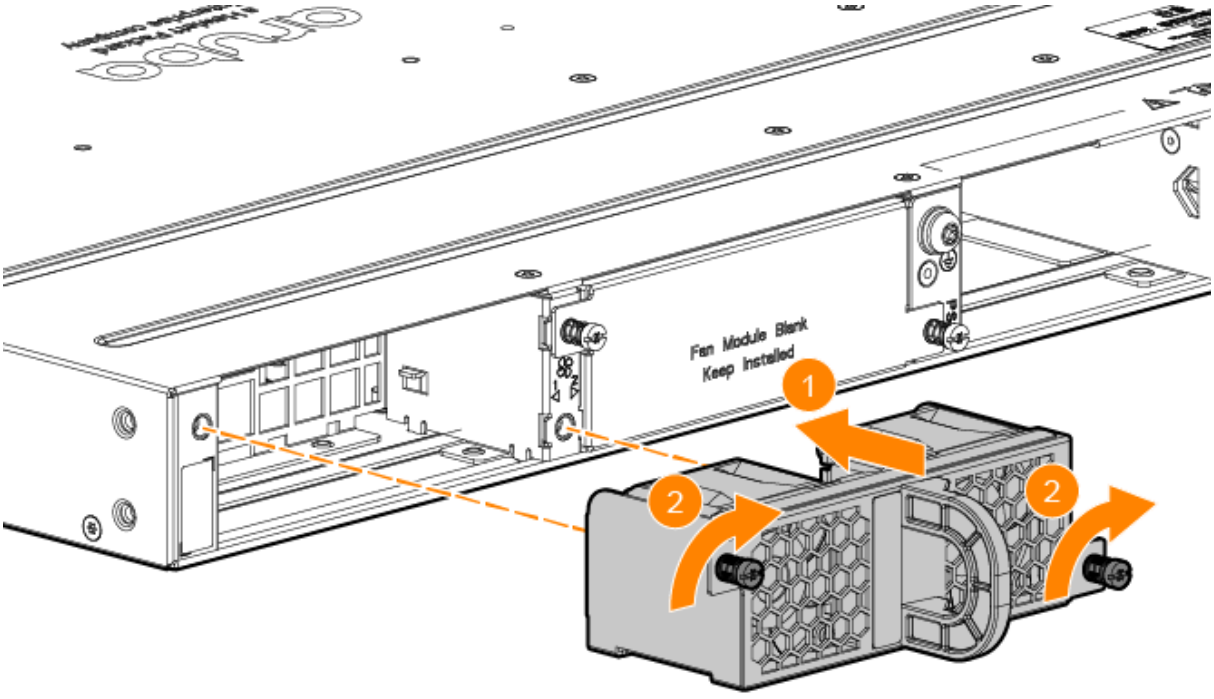

Insert the new fan by sliding the component all the way and tighten the T10 screws by turning them clockwise.

Replacing the power supply

If the switch is configured with redundant power supplies, the switch will not suffer any loss of traffic or performance if one power supply fails. Replace the failed component as soon as possible. The PS (Power Supply) LED will flash simultaneously with the switch Fault LED indicating a power supply has failed.

This section is only applicable to 6200M switches.

Figure 29 *Replacing a failed power supply*

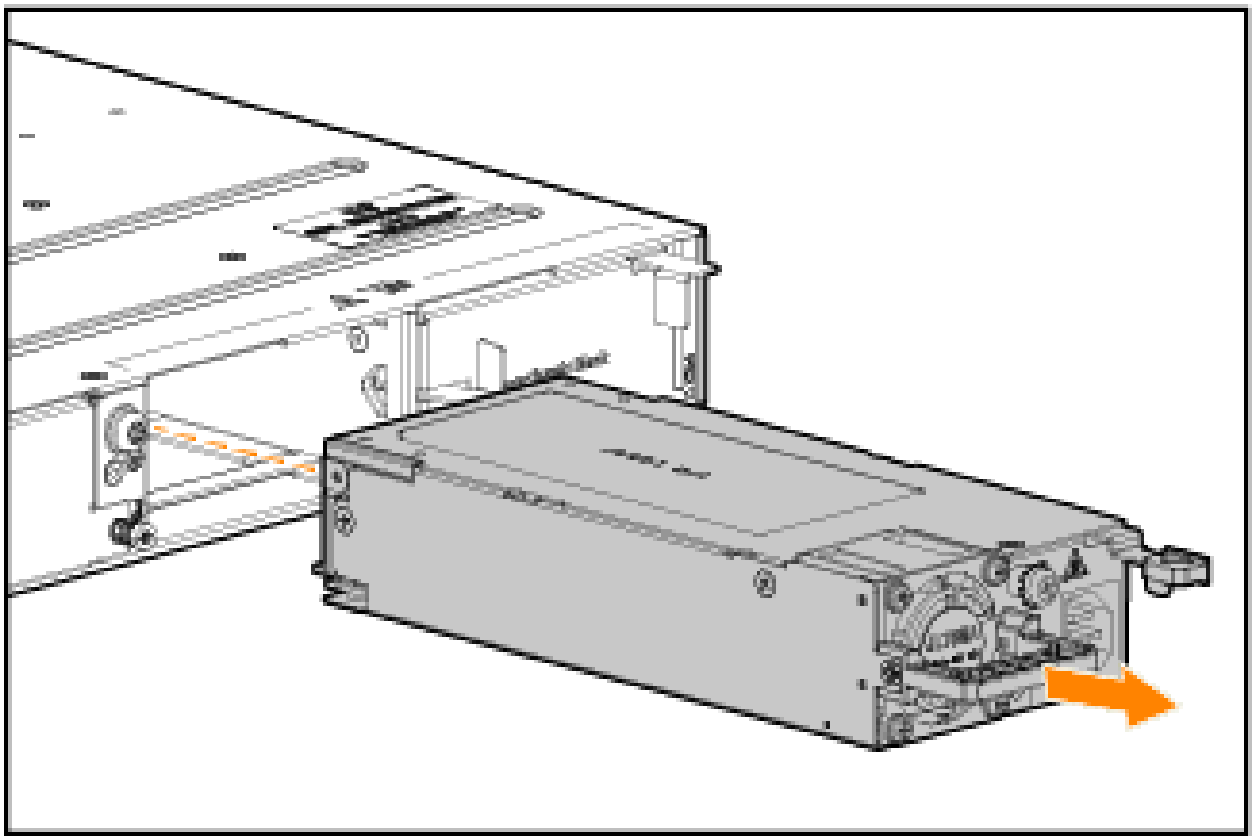

Chapter 5
Troubleshooting

This chapter describes how to troubleshoot your switch, primarily from a hardware perspective. You can perform more in-depth troubleshooting on the switch using the software tools available with the switch. Included are the console interface and the built-in web browser interface.

Basic troubleshooting tips

Most problems are caused by the following situations. Check for these items first when starting your troubleshooting:

- **Connecting to Devices that have a Fixed Full-Duplex Configuration**: The RJ-45 ports are configured as “Auto”. That is, when connecting to attached devices, the switch operates in either half duplex or full duplex to determine the link speed and the communication mode:
  - If the connected device is also configured to Auto, the switch will automatically negotiate both link speed and communication mode.
  - If the connected device has a fixed configuration, for example 100 Mbps, at half or full duplex, the switch will automatically sense the link speed, but will default to a communication mode of half duplex.

  Because the switch behaves in this way (in compliance with the IEEE 802.3 standard), if a device connected to the switch has a fixed configuration at full duplex, the device will not connect correctly to the switch. The result will be high error rates and inefficient communications between the switch and the device.

  Make sure that all the devices connected to the switch are configured to auto negotiate, or are configured to speed and duplex settings matching the settings configured on the corresponding switch port.

- **Improper Network Topologies**: It is important to make sure that you have a valid network topology. Common topology faults include excessive cable length and excessive repeater delays between end nodes. If you have network problems after recent changes to the network, change back to the previous topology. If you no longer experience the problems, the new topology is probably at fault. Sample topologies are shown at the end of chapter 2 in this book.

  In addition, make sure that your network topology contains no data path loops. Between any two end nodes, only one active cabling path is allowed at any time. Data path loops can cause broadcast storms that will severely impact your network performance.

  For your switch, if you want to build redundant paths between important nodes in your network to provide some fault tolerance, enable Spanning Tree Protocol support on the switch. This support ensures that only one of the redundant paths is active at any time, thus avoiding data path loops. For more information on Spanning Tree, see the Layer 2 Bridging Guide.
- **Faulty or Loose Cables**: Look for loose or faulty connections. If they appear to be OK, make sure that the connections are snug. If that does not correct the problem, try a different cable.

- **Nonstandard Cables**: Nonstandard and incorrectly wired cables may cause network collisions and other network problems, and can seriously impair network performance. A category 5 or greater cable tester is a recommended tool for every network installation.
- **Check the Port Configuration**: A port on your switch may not be operating as expected because it is administratively disabled in the configuration. It may also be placed into a "blocking" state by a protocol operating on the port (dynamic VLANs), or LACP (dynamic trunking). For example, the normal operation of the spanning tree, GVRP, LACP, and other features may put the port in a blocking state.

  Use the switch console to determine the port configuration and verify that there is not an improper or undesired configuration of any of the switch features that may be affecting the port.

Diagnosing with the LEDs

Table 25: Front Panel LED Behavior

Switch LEDs	Function	State	Meaning
Back LED	Status of modular components installed in the back of the chassis (not applicable for 6200F switches	On - Green	Normal
		Slow Flash - Amber	Fault in one of the modules in the back of the chassis
PoE LED	Indicates Port LEDs are showing PoE information (not applicable for non PoE switches)	Off	PoE mode not selected
		On - Green	PoE mode selected
		Slow Flash - Amber	Hardware failure PoE enabled port, PoE mode not selected
		On - Amber	Hardware failure PoE enabled port, PoE mode selected
Spd LED	Indicates Port LEDs are showing speed information	Off	Speed mode not selected
		On - Green	Speed mode selected
		Not Implemented	No fault defined

Switch LEDs	Function	State	Meaning
Stk LED	Indicates Port LEDs are showing stacking mode information	Off	Stacking mode not selected
		On - Green	Stacking mode selected
		On - Amber	A port has a stacking failure. Stacking mode selected
		Slow flash Amber	A port has a stacking failure. Stacking mode not selected
UID LED	User-configurable LED	Off	User defined the located LED : OFF
		On/Flash Blue (for 30 min)	User defined the locator LED: On/Flash
Global Status Indicator LED	Overall status of the product	Flash - Green	Self-test in progress during UBOOT and SVOS
		On - Green	Successfully booted AOS-CX
		Flash - Amber	Recoverable faults (e.g. fans, PSU fault)
		On - Amber	Critical faults (e.g. exceed temperature limit)
OOBM Status Indicator LED	Status of OOBM Link connectivity	Off	OOBM port is not connected, no link established
		Half Bright - Green	OOBM port is enabled and established link with partner
		On - Green	Experiencing high bandwidth utilization
		Activity Flicker - Green	% of the time that the LED light up is roughly proportional to the % of full bandwidth utilization of the port
* Press the Mode Select button to switch between User(default), PoE, Spd, or Stk Mode.			

Table 26: Rear Panel LED Behavior

Switch LEDs	Function	State/Mode	Meaning
Fan health LED	Status of fan	On - Green	Normal
		Slow flash - Amber	Fan fault
UID LED	User-configurable LED	Off	User define the locator LED : OFF
		On/Flash (30 min) - blue	User define the locator LED: On/Flash
PSU Status Indicator LED	Status of power supply	On Green	Normal
		Off	No power, PSU has invalid AC input
		Slow Flash - Green	Power supply has faulted or warning

Diagnostic Tips

Tip	Problem	Solution
1	The switch is not plugged into an active AC power source, or the switch power supply may have failed.	1. Verify that the power cord is plugged into an active power source and to the switch. Make sure that these connections are snug. 2. Try power cycling the switch by unplugging and plugging the power cord back in. 3. If the power supply LED is still not on, verify that the AC power source works by plugging another device into the outlet. Or try plugging the switch into a different outlet or try a different power cord. If the power source and power cord are OK and this condition persists, the switch power supply may have failed. Call your Hewlett Packard Enterprise authorized network reseller.
2	A switch hardware failure has occurred. All the LEDs will stay on indefinitely.	Try power cycling the switch. If the fault indication reoccurs, the switch may have failed. Call your Hewlett Packard Enterprise authorized network reseller.
3	The switch has experienced a software failure during self-test.	1. Try resetting the switch by pressing the Reset button on the front of the switch, or by power cycling the switch. 2. If the fault indication reoccurs, attach a console to the switch (as indicated in chapter 2) and configure it to operate. Then, reset the switch. Messages then appear on the console screen and in the console log to identify the error condition.

Tip	Problem	Solution
		You can view the console log at that point by selecting it from the console Main Menu. If necessary to resolve the problem, contact your Hewlett Packard Enterprise authorized network reseller.
4	One or more of the switch cooling fans may have failed.	Try disconnecting power from the switch and wait a few moments. Then reconnect the power to the switch and check the LEDs again. If the error indication reoccurs, one or more of the fans has failed. Call your Hewlett Packard Enterprise authorized network reseller.
5	The network port for which the LED is blinking has experienced a self-test or initialization failure.	Try power cycling the switch. If the fault indication reoccurs, the switch port may have failed. Call your Hewlett Packard Enterprise authorized network reseller. If the port is a pluggable SFP/SFP+ unit, verify it is a pluggable supported by the switch. An unsupported pluggable will be identified with this fault condition. Caution: Use only supported genuine Hewlett Packard Enterprise transceivers with your switch. To verify that the port has failed, try removing and reinstalling the SFP/SFP+. You can do that without having to power off the switch. If the port fault indication reoccurs, you will have to replace the SFP/SFP+ unit.
6	The network connection is not working properly.	Try the following procedures: ■ For the indicated port, verify both ends of the cabling, at the switch and the connected device, are connected properly. ■ Verify that the connected device and switch are both powered on and operating correctly. ■ Verify that you have used the correct cable type for the connection: ◦ For twisted-pair connections to the fixed 10/100 or 10/100/1000 ports, if the port is configured to “Auto” (auto negotiate), either straight-through or crossover cables can be used. This allowance is because of the switch’s “Aruba Auto-MDIX” feature and the Auto MDI/MDI-X feature of the 10/100/1000-T port. **NOTE:** If the switch port configuration is changed to one of the fixed configuration options (for example, 100 Mbps/Full Duplex), then the port operates as MDI-X only and you must use the correct type of cable for the connection. In general, for connecting an end node (MDI port) to the switch, use straight-through cable; for connecting to MDI-X ports on hubs, other switches, and routers, use crossover

Tip	Problem	Solution
		cable. ◦ For fiber-optic connections, verify that the transmit port on the switch is connected to the receive port on the connected device, and the switch receive port is connected to the transmit port on the connected device. ■ For 1000Base-T connections, verify that the network cabling complies with the IEEE 802.3ab standard. Install the cable according to the ANSI/TIA/EIA-568-A-5 specifications. Ensure that cable testing complies with the stated limitations for Attenuation, Near-End Crosstalk, Far-End Crosstalk, Equal-Level Far-End Crosstalk (ELFEXT), Multiple Disturber ELFEXT, and Return Loss. The cable verification process must include all patch cables from any end devices, including the switch, to any patch panels in the cabling path. ■ Verify that the port has not been disabled through a switch configuration change. You can use the console interface, or, if you have configured an IP address on the switch, use the web browser interface or AirWave network management software to determine the state of the port and re-enable the port if necessary. ■ Verify that the switch port configuration matches the configuration of the attached device. For example, if the switch port is configured as “Auto”, the port on the attached device also MUST be configured as “Auto”. Depending on the port type, twisted-pair or fiber-optic, if the configurations do not match, the results could be an unreliable connection, or no link at all. ■ If the other procedures do not resolve the problem, try using a different port or a different cable.
7	The port or remote link partner may be improperly configured, or the port may be in a “blocking” state by the normal operation of protocols, such as Spanning Tree, LACP, or GVRP features.	■ Ensure that the device at the other end of the connection indicates a good link to the switch. If it does not, the problem may be with the cabling between the devices, the connectors on the cable, or the configuration of the device on the remote end of the cable. ■ Use the switch console to check the configuration on the port to confirm whether the port is administratively disabled or placed in a “blocking”

Tip	Problem	Solution
		state by the normal operation of one or more protocols. ◦ Check the Port Status using the show interfaces command to confirm whether the port is configured as “disabled”. ◦ To confirm which protocols are operating on the port, review the switch configuration. Use the appropriate feature show commands to confirm whether the port is put into a “blocking” state. ▪ For software troubleshooting tips, see the chapter “Troubleshooting” in the *Management and Configuration Guide* for your switch at https://www.hpe.com/networking/support.
8	A redundant power supply has experienced a fault.	At least one power supply must be operating properly. To make sure that the power supply is plugged in to an active power source, check the power supply. If the power supply is operating but the LEDs are still blinking, the power supply may have failed. Unplug the power supply, wait for 5 seconds for residual charge to dissipate, and then plug the power supply. If the fault light is still blinking, replace the power supply.
9	The switch has overheated.	Check to ensure that the fans are functioning correctly.
10	The port may have an internal hardware failure. The port may be denied PoE power. The port may be detecting an external PD fault.	Check the port for a hardware failure. Doing so may require a reboot of the switch. Check the port for correct PoE configuration and allocation. Also check the external PD for a fault.
11	A redundant power supply is not connected to an active AC power source.	(At least one power supply must be operating properly.) Connect the unplugged power supply to an AC power source, using a supported power cord for your country/region.

Proactive networking

The switches have built-in management capabilities that proactively help you manage your network, they include:

- Finding and helping you fix the most common network error conditions (for example, faulty network cabling, and nonstandard network topologies).
- Informing you of the problem with clear, easy-to-understand messages.
- Recommending network configuration changes to enhance the performance of your network.

The following interfaces provide tests, indicators, and an event log that can be used to monitor the switch and its network connections:

- A graphical web browser interface that you can use to manage your switch from a PC running a supported web browser, for example Microsoft Internet Explorer and Firefox.

- A full-featured easy-to-use console interface that you can access by connecting a standard terminal or PC running a terminal emulator to the switch console port using an USB-C to USB-A cable (sold separately). The console command-line interface is also accessible through a Telnet or SSH connection.

Hardware diagnostic tests

Testing the switch by resetting it

If you believe the switch is not operating correctly, you can reset the switch to test its circuitry and operating code. To reset a switch, try any of the following:

- Unplug and plug in the power cord (power cycling).
- Press the Reset button on the front of the switch.
- Reboot the switch via the management console's `boot system` command.

Power cycling the switch and pressing the Reset button both cause the switch to perform its power-on self test, which almost always will resolve any temporary operational problems. These reset processes also cause any network traffic counters to be reset to zero, and cause the System Up Time timer to reset to zero.

Checking the switch LEDs

See Switch and Port LEDs on Front of the Switches for information on interpreting the LED patterns and LED behaviors.

Checking console messages

Useful diagnostic messages may be displayed on the console screen when you reset a switch. Connect a PC running a VT-100 terminal emulator program or a standard VT-100 terminal to the switch console port. Configure the terminal to run at 115200 baud, and with the other terminal communication settings.

When you reset the switch, note the messages that are displayed. Additionally, you can check the switch event log, which can be accessed from the console using the `show log` command, or from the console main menu.

Testing twisted-pair cabling

Network cables that fail to provide a link or provide an unreliable link between the switch and the connected network device may not be compatible with the IEEE 802.3 Type 10Base-T, 100Base-TX, or 1000Base-T standards. The twisted-pair cables attached to the switch must be compatible with the appropriate standards. To verify your cable is compatible with these standards, use a qualified cable test device.

Testing switch-to-device network communications

The following communication tests can verify that the network is operating correctly between the switch and any connected device that can respond correctly to the communication test.

- Link Test: A physical layer test that sends IEEE 802.2 test packets to any device identified by its MAC address.

- Ping Test: A network layer test used on IP networks that sends test packets to any device identified by its IP address.

These tests can be performed through the switch console interface. Use a terminal connected directly to the switch or through a Telnet connection, or from the switch web browser interface. For more information, see the *Fundamentals Guide* for your switch.

These tests can also be performed from an SNMP network management station running a program that can manage the switch, like AirWave.

Testing end-to-end network communications

Both the switch and the cabling can be tested by running an end-to-end communications test. This is a test that sends known data from one network device to another through the switch. For example, if you have two PCs on the network that have LAN adapters between which you can run a link-level test or Ping test through the switch, you can use this test to verify that the entire communication path between the two PCs is functioning correctly. See your LAN adapter documentation for more information on running a link test or Ping test.

Restoring the factory default configuration

As part of your troubleshooting process on the switch, it may become necessary to return the switch configuration to the factory default settings. This process momentarily interrupts the switch operation, clears any passwords, clears the console event log, resets the network counters to zero, performs a complete self-test, and reboots the switch into its factory default configuration, including deleting the IP address, if one is configured.



This process removes all switch configuration changes made from the factory default settings. This operation includes, for example, configuration of VLANs, spanning tree, and trunks. Returning the configuration of these features to their factory default settings (usually disabling them) may result in network connectivity issues.
If the switch has a valid configuration, and you are restoring the factory default settings for a reason other than configuration problems, save the switch configuration prior to performing the factory default reset. After the reset and resolution of the original problem, you can restore the saved configuration to the switch.

You can restore the factory default configuration either on the switch console or on the switch itself.

To restore the factory default configuration using the console, execute the `erase startup-config` command from the console command prompt.

Downloading new switch software

Software updates can be downloaded to the switch through several methods. For more information, see Support and Other Resources.

Physical and environmental

Physical Information: 6200F switches

Table 27: *Physical information for 6200F switches*

Switch	Weight	Dimensions (W x D x H)
HPE Aruba Networking CX 6200F 24G 4SFP+ Switch (JL724B)	3.77 kg (8.32 lbs)	44.25 cm x 28.4 cm x 4.37 cm (17.42 in x 11.2 in x 1.72 in)
HPE Aruba Networking CX 6200F 24G 4SFP Switch (S0M81A)		
HPE Aruba Networking CX 6200F 24G 4SFP+ TAA-compliant Switch (S0M86A)		
HPE Aruba Networking CX 6200F 24G 4SFP TAA-compliant Switch (S0G13A)		
HPE Aruba Networking CX 6200F 48G 4SFP+ Switch (JL726B)	3.9 kg (8.59 lbs)	
HPE Aruba Networking CX 6200F 48G 4SFP Switch (S0M83A)		
HPE Aruba Networking CX 6200F 48G 4SFP+ TAA-compliant Switch (S0M88A)		
HPE Aruba Networking CX 6200F 48G 4SFP TAA-compliant Switch (S0G15A)		

Switch	Weight	Dimensions (W x D x H)
HPE Aruba Networking CX 6200F 24G Class 4 PoE 4SFP+ 370W Switch (JL725B)	4.39 kg (9.68 lbs)	44.25 cm x 30.43 cm x 4.37 cm (17.42 in x 11.98 in x 1.72 in)
HPE Aruba Networking CX 6200F 24G Class 4 PoE 4SFP 370W Switch (S0M82A)		
HPE Aruba Networking CX 6200F 24G Class 4 PoE 4SFP+ 370W TAA-compliant Switch (S0M87A)		
HPE Aruba Networking CX 6200F 24G Class 4 PoE 4SFP 370W TAA-compliant Switch (S0G14A)		
HPE Aruba Networking CX 6200F 48G Class 4 PoE 4SFP+ 370W Switch (JL727B)	4.87 kg (10.74 lbs)	
HPE Aruba Networking CX 6200F 48G Class 4 PoE 4SFP 370W Switch (S0M84A)		
HPE Aruba Networking CX 6200F 48G Class 4 PoE 4SFP+ 370W TAA-compliant Switch (S0M89A)		
HPE Aruba Networking CX 6200F 48G Class 4 PoE 4SFP 370W TAA-compliant Switch (S0G16A)		
HPE Aruba Networking CX 6200F 48G Class 4 PoE 4SFP+ 740W Switch (JL728B)	5.13 kg (11.32 lbs)	44.25 cm x 32.66 cm x 4.37 cm (17.42 in x 12.86 in x 1.72 in)
HPE Aruba Networking CX 6200F 48G Class 4 PoE 4SFP 740W Switch (S0M85A)		
HPE Aruba Networking CX 6200F 48G Class 4 PoE 4SFP+ 740W TAA-compliant Switch (S0M90A)		
HPE Aruba Networking CX 6200F 48G Class 4 PoE 4SFP 740W TAA-compliant Switch (S0G17A)		
HPE Aruba Networking CX 6200F 12G Class4 PoE 2G/2SFP+ 139W Switch (R8Q72A)	3.24 kg (7.14 lbs)	25.4 cm x 30.5 cm x 4.39 cm (10.0 in x 12.0 in x 1.73 in)
HPE Aruba Networking CX 6200F 12G Class4 PoE 2G/2SFP+ 139W TAA Switch (R8V13A)		

Switch	Weight	Dimensions (W x D x H)
Aruba 6200F 24G 4SFP+ Switch (JL724A)	4.36 kg (9.61 lbs)	44.25 cm x 32.7 cm x 4.37 cm (17.42 in x 12.9 in x 1.72 in)
Aruba 6200F 24G Class4 PoE 4SFP+ 370W Switch (JL725A)	4.9 kg (10.8 lbs)	
Aruba 6200F 48G 4SFP+ Switch (JL726A)	4.45 kg (9.81 lbs)	
Aruba 6200F 48G Class4 PoE 4SFP+ 370W Switch (JL727A)	5.05 kg (11.13 lbs)	
Aruba 6200F 48G Class4 PoE 4SFP+ 740W Switch (JL728A)	5.10 kg (11.24 lbs)	

Physical Information: 6200M switches

Table 28: *Physical information for 6200M switches*

Switch	Weight	Dimensions (W x D x H)
HPE Aruba Networkng CX 6200M 24G 4SFP+ Switch (R8Q67A)	5.44 kg (12.00)	44.2 cm x 38.5 cm x 4.4 cm (17.4 x 15.2 x 1.73)
HPE Aruba Networking CX 6200M 24G 4SFP+ TAA Switch (R8V08A)		
HPE Aruba Networking CX 6200M 24G Class4 PoE 4SFP+ Switch (R8Q68A)	5.86 kg (12.91 lbs)	44.2 cm x 38.5 cm x 4.4 cm (17.4 x 15.2 x 1.73)
HPE Aruba Networking CX 6200M 24G Class4 PoE 4SFP+ TAA Switch (R8V09A)		
HPE Aruba Networking CX 6200M 48G 4SFP+ Switch (R8Q69A)	5.56 kg (12.26 lbs)	44.2 cm x 38.5 cm x 4.4 cm (17.4 x 15.2 x 1.73)
HPE Aruba Networkng CX 6200M 48G 4SFP+ TAA Switch (R8V10A)		
HPE Aruba Networking CX 6200M 48G Class4 PoE 4SFP+ Switch (R8Q70A)	6.15 kg (16.56 lbs)	44.2 cm x 38.5 cm x 4.4 cm (17.4 x 15.2 x 1.73)
HPE Aruba Networkng CX 6200M 48G Class4 PoE 4SFP+ TAA Switch (R8V11A)		
HPE Aruba Networking CX 6200M 36G 12SR5 Class6 PoE 4SFP+ Switch (R8Q71A)	6.31 kg (13.91 lbs)	44.2 cm x 38.5 cm x 4.4 cm (17.4 x 15.2 x 1.73)
HPE Aruba Networking 6200M 36G 12SR5 Class6 PoE 4SFP+ TAA Switch (R8V12A)		

Environmental Information

Table 29: *Environmental information for 6200 F/M switches*

	HPE Aruba Networking 6200 F/M switches
Operating temperature	32°F to 113°F (0°C to 45°C) up to 5000 ft derate -1°C for every 1000 ft from 5000 ft to 10000 ft
Operating relative humidity	5% to 95% @ 104°F (40°C) non-condensing
Non-operating temperature	-40°F to 158°F (-40°C to 70°C) up to 15000 ft
Non-operating storage relative humidity	5% to 95% @ 149°F (65°C) non-condensing
Max operating altitude	10000 feet (3.05 km) Max
Max non-operating altitude	15000 feet (4.57 km) Max

Table 30: *6200M Removable parts*

Item	Weight
JL085A Power supply	1.52 lb (0.69 kg)
JL086A Power supply	1.83 lb (0.83 kg)
JL087A Power supply	1.94 lb (0.88 kg)
JL669B Aruba X751 Port to Power Fan Tray	0.46 lb (0.21 kg)
5300-0908 Fan blank	0.18 lb (0.08 kg)

Electrical

Model	Description	AC voltage	Maximum current	Frequency range	Maximum power
JL724B	Aruba CX 6200F 24G 4SFP+ Switch	100-120V	0.9A	50/60 Hz	120W
		200-240V	0.6A		
JL725B	Aruba CX 6200F 24G Class 4 PoE 4SFP+ 370W Switch	100-120V	5.2A	50/60 Hz	500W
		200-240V	2.6A		
JL726B	Aruba CX 6200F 48G 4SFP+ Switch	100-120V	0.9A	50/60 Hz	120W
		200-240V	0.6A		
JL727B	Aruba CX 6200F 48G Class 4 PoE 4SFP+ 370W Switch	100-120V	5.2A	50/60 Hz	500W
		200-240V	2.6A		

Model	Description	AC voltage	Maximum current	Frequency range	Maximum power
JL728B	Aruba CX 6200F 48G Class 4 PoE 4SFP+ 740W Switch	100-120V	10.3A	50/60 Hz	950W
		200-240V	5.0A		
S0M81A	HPE Aruba Networking CX 6200F 24G 4SFP Switch	100-120V	0.9A	50/60 Hz	120W
		200-240V	0.6A		
S0M82A	HPE Aruba Networking CX 6200F 24G Class 4 PoE 4SFP 370W Switch	100-120V	5.2A	50/60 Hz	500W
		200-240V	2.6A		
S0M83A	HPE Aruba Networking CX 6200F 48G 4SFP Switch	100-120V	0.9A	50/60 Hz	120W
		200-240V	0.6A		
S0M84A	HPE Aruba Networking CX 6200F 48G Class 4 PoE 4SFP 370W Switch	100-120V	5.2A	50/60 Hz	500W
		200-240V	2.6A		
S0M85A	HPE Aruba Networking CX 6200F 48G Class 4 PoE 4SFP 740W Switch	100-120V	10.3A	50/60 Hz	950W
		200-240V	5.0A		
S0M86A	HPE Aruba Networking CX 6200F 24G 4SFP+ TAA-compliant Switch	100-120V	0.9A	50/60 Hz	120W
		200-240V	0.6A		
S0M87A	HPE Aruba Networking CX 6200F 24G Class 4 PoE 4SFP+ 370W TAA-compliant Switch	100-120V	5.2A	50/60 Hz	500W
		200-240V	2.6A		
S0M88A	HPE Aruba Networking CX 6200F 48G 4SFP+ TAA-compliant Switch	100-120V	0.9A	50/60 Hz	120W
		200-240V	0.6A		
S0M89A	HPE Aruba Networking CX 6200F 48G Class 4 PoE 4SFP+ 370W TAA-compliant Switch	100-120V	5.2A	50/60 Hz	500W
		200-240V	2.6A		
S0M90A	HPE Aruba Networking CX 6200F 48G Class 4 PoE 4SFP+ 740W TAA-compliant Switch	100-120V	10.3A	50/60 Hz	950W
		200-240V	5.0A		
S0G13A	HPE Aruba Networking CX 6200F 24G 4SFP TAA-compliant Switch	100-120V	0.9A	50/60 Hz	120W
		200-240V	0.6A		
S0G14A	HPE Aruba Networking CX 6200F 24G Class 4 PoE 4SFP 370W TAA-compliant Switch	100-120V	5.2A	50/60 Hz	500W
		200-240V	2.6A		

Model	Description	AC voltage	Maximum current	Frequency range	Maximum power
S0G15A	HPE Aruba Networking CX 6200F 48G 4SFP TAA-compliant Switch	100-120V	0.9A	50/60 Hz	120W
		200-240V	0.6A		
S0G16A	HPE Aruba Networking CX 6200F 48G Class 4 PoE 4SFP 370W TAA-compliant Switch	100-120V	5.2A	50/60 Hz	500W
		200-240V	2.6A		
S0G17A	HPE Aruba Networking CX 6200F 48G Class 4 PoE 4SFP 740W TAA-compliant Switch	100-120V	10.3A	50/60 Hz	950W
		200-240V	5.0A		
R8Q72A	HPE Aruba Networking 6200F 12G Class4 PoE 2G/2SFP+ 139W Switch	100-127V	2.6A	50/60 Hz	180W
		200-240V	1.3A		
R8V13A	HPE Aruba Networking 6200F 12G Class4 PoE 2G/2SFP+ 139W TAA Switch	100-127V	2.6A	50/60 Hz	180W
		200-240V	1.3A		
JL724A	Aruba 6200F 24G 4SFP+ Switch	100-120V	2.5A	50/60 Hz	200W
		200-240V	1.4A		
JL725A	Aruba 6200F 24G Class4 PoE 4SFP+ 370W Switch	100-127V	7.5A	50/60 Hz	500W
		200-240V	3.5A		
JL726A	Aruba 6200F 48G 4SFP+ Switch	100-120V	2.5A	50/60 Hz	200W
		200-240V	1.4A		
JL727A	Aruba 6200F 48G Class4 PoE 4SFP+ 370W Switch	100-127V	7.5A	50/60 Hz	500W
		200-240V	3.5A		
JL728A	Aruba 6200F 48G Class4 PoE 4SFP+ 740W Switch	100-120V	11A	50/60 Hz	950W
		200-240V	6A		

Acoustics

Product*	Acoustics
Aruba 6200F 24G 4SFP+ Switch (JL724A)	Sound Power (LWAd) 4.9 Bel Sound Pressure (LpAm) (Bystander) 32.5 dB
Aruba CX6200F 24G 4SFP+ Switch (JL724B)	
HPE Aruba Networking CX 6200F 24G 4SFP+ TAA-compliant Switch (S0M86A)	
HPE Aruba Networking CX 6200F 24G 4SFP Switch (S0M81A)	
HPE Aruba Networking CX 6200F 24G 4SFP TAA-compliant Switch (S0G13A)	
Aruba 6200F 24G Class 4 PoE 4SFP+ 370W Switch (JL725A)	Sound Power (LWAd) 5.0 Bel Sound Pressure (LpAm) (Bystander) 32.8 dB
Aruba CX 6200F 24G Class 4 PoE 4SFP+ 370W Switch (JL725B)	
HPE Aruba Networking CX 6200F 24G Class 4 PoE 4SFP+ 370W TAA-compliant Switch (S0M87A)	
HPE Aruba Networking CX 6200F 24G Class 4 PoE 4SFP 370W Switch (S0M82A)	
HPE Aruba Networking CX 6200F 24G Class 4 PoE 4SFP 370W TAA-compliant Switch (S0G14A)	
Aruba 6200F 48G 4SFP+ switch (JL726A)	Sound Power (LWAd) 4.9 Bel Sound Pressure (LpAm) (Bystander) 33.0 dB
Aruba CX 6200F 48G 4SFP+ Switch (JL726B)	
HPE Aruba Networking CX 6200F 48G 4SFP+ TAA-compliant Switch (S0M88A)	
HPE Aruba Networking CX 6200F 48G 4SFP Switch (S0M83A)	
HPE Aruba Networking CX 6200F 48G 4SFP TAA-compliant Switch (S0G15A)	
Aruba 6200F 48G Class 4 PoE 4SFP+ 370W switch (JL727A)	Sound Power (LWAd) 4.9 Bel Sound Pressure (LpAm) (Bystander) 32.7 dB
Aruba CX 6200F 24G Class 4 PoE 4SFP+ 370W Switch (JL727B)	
HPE Aruba Networking CX 6200F 48G Class 4 PoE 4SFP+ 370W TAA-compliant Switch (S0M89A)	
HPE Aruba Networking CX 6200F 48G Class 4 PoE 4SFP 370W Switch (S0M84A)	
HPE Aruba Networking CX 6200F 48G Class 4 PoE 4SFP 370W TAA-compliant Switch (S0G16A)	

Product*	Acoustics
Aruba 6200F 48G Class 4 PoE 4SFP+ 740W switch (JL728A)	Sound Power (LWAd) 5.3 Bel Sound Pressure (LpAm) (Bystander) 37.1 dB
Aruba CX 6200F 48G Class 4 PoE 4SFP+ 740W Switch (JL728B)	
HPE Aruba Networking CX 6200F 48G Class 4 PoE 4SFP+ 740W TAA-compliant Switch (S0M90A)	
HPE Aruba Networking CX 6200F 48G Class 4 PoE 4SFP 740W Switch (S0M85A)	
HPE Aruba Networking CX 6200F 48G Class 4 PoE 4SFP 740W TAA-compliant Switch (S0G17A)	
HPE Aruba Networking CX 6200M 24G 4SFP+ switch (R8Q67A)	Sound Power (LWAd) 4.5 Bel Sound Pressure (LpAm) (Bystander) 29.1 dB
HPE Aruba Networking CX 6200M 24G 4SFP+ TAA switch (R8V08A)	
HPE Aruba Networking CX 6200M 24G Class4 PoE 4SFP+ switch (R8Q68A)	Sound Power (LWAd) 4.6 Bel Sound Pressure (LpAm) (Bystander) 29.8 dB
HPE Aruba Networking CX 6200M 24G class4 PoE 4SFP+ TAA switch (R8V09A)	
HPE Aruba Networking CX 6200M 48G 4SFP+ switch (R8Q69A)	Sound Power (LWAd) 4.5 Bel Sound Pressure (LpAm) (Bystander) 29.4 dB
HPE Aruba Networking CX 6200M 48G 4SFP+ TAA switch (R8V10A)	
HPE Aruba Networking CX 6200M 48G Class4 PoE 4SFP+ switch (R8Q70A)	Sound Power (LWAd) 4.6 Bel Sound Pressure (LpAm) (Bystander) 30.0 dB
HPE Aruba Networking CX 6200M 48G Class4 PoE 4SFP+ TAA switch (R8V11A)	
HPE Aruba Networking CX 6200M 36G 12SR5 Class6 PoE 4SFP+ switch (R8Q71A)	Sound Power (LWAd) 4.5 Bel Sound Pressure (LpAm) (Bystander) 29.0 dB
HPE Aruba Networking 6200M 36G 12SR5 Class6 PoE 4SFP+ TAA Switch (R8V12A)	
HPE Aruba Networking CX 6200F 12G Class4 PoE 2G/2SFP+ 139W switch (R8Q72A)	Sound Power (LWAd) 0 Bel Sound Pressure (LpAm) (Bystander) 0 dB
HPE Aruba Networking CX 6200F 12G Class4 PoE 2G/2SFP+ 139W TAA Switch (R8V13A)	

* Acoustics measured in 23°C semi-anechoic chamber. Measured in accordance with ISO 7779. Declared in accordance with ISO 9296. Values presented are the Declared A-Weighted Sound Power Level (LWAd) and the mean Bystander A-Weighted Sound Pressure Level (LpAm).

Safety

Safety and Regulatory Information for 6200F switches

Table 31: *Safety and regulatory information for HPE Aruba Networking 6200F switches*

	JL724A, JL725A, JL726A, JL727A, JL728A	R8Q72A, R8V13A	JL724B, JL725B, JL726B, JL727B, JL728B, S0M81A, S0M82A, S0M83A, S0M84A, S0M85A, S0M86A, S0M87A, S0M88A, S0M89A, S0M90A, S0G13A, S0G14A, S0G15A, S0G16A, S0G17A
Safety-EU	EN 62368-1:2014 +A11:2017 2nd Ed. EN 62368-1:2020 +A11:2020 3rd Ed.		
Safety-Worldwide	IEC 60950-1:2005 + A1:2009 + A2:2013 with all known National Deviations IEC 62368-1:2014 2nd ed. with all known National Deviations IEC 62368-1:2018 3rd Ed. with all known National Deviations		IEC 62368-1:2014 2nd ed. with all known National Deviations IEC 62368-1:2018 3rd Ed. with all known National Deviations
Safety-North America	US:UL 60950 2nd Ed. CAN:CSA-C22.2 No. 60950-1-07	US:UL 62368 3rd Ed. CAN:CSA-C22.2 No. 62368-1:14 3rd Ed.	
EMC	BS/EN 55032:2015 +A11:2020/CISPR 32, Class A BS/EN 55035:2017 +A11:2020/CISPR 35		
	FCC CFR47 Part 15:2014, Class A ICES-0013, Class A AS/NZS CISPR 32, Class A VCCI-32, Class A CNS 15936:2016 KS C 9832:2019 KS C 9835:2019		
	BS/EN 61000-3-2:2014 BS/EN 61000-3-3:2013	BS/EN 61000-3-2:2019 BS/EN 61000-3-3:2013/A1:2019	
RoHS	EN IEC 63000:2018		

Safety and Regulatory Information for 6200M switches

Table 32: Safety and regulatory information for HPE Aruba Networking 6200M switches

Topic	Range
Safety-EU	EN 62368-1:2014 +A11:2017 2nd Ed. EN 62368-1:2020 +A11:2020 3rd Ed.

Topic	Range
Safety-World Wide	IEC 60950-1:2005 + A1:2009 + A2:2013 with all known National Deviations IEC 62368-1:2014 2nd ed. with all known National Deviations IEC 62368-1:2018 3rd Ed. with all known National Deviations
North American	US:UL 62368 3rd Ed. CAN/CSA-C22.2 No. 62368-1 3rd Ed.
EMC	BS/EN 55032:2015 +A11:2020/CISPR 32, Class A BS/EN 55035:2017 +A11:2020/CISPR 35 BS/EN 61000-3-2:2019 BS/EN 61000-3-3:2013/A1:2019 FCC CFR47 Part 15:2014, Class A ICES-003, Class A AS/NZS CISPR 32, Class A VCCI-32, Class A CNS 15936:2016 KS C 9832:2019 KS C 9835:2019
RoHS	EN IEC 63000:2018

Battery Statements

- Where a battery incorporated by Hewlett Packard Enterprise is too small to bear the CE marking, it conforms with applicable CE requirements.
- These switches use a lithium battery. Do not attempt to replace the battery. Return the switch to Hewlett Packard Enterprise for battery replacement.
- The only indicator of battery failure is the failure of the switch internal clock to keep the correct time across a reboot or power cycle. If a battery failure occurs, contact your authorized Hewlett Packard Enterprise representative for assistance. Batteries are not customer-serviceable and battery failures should be referred only to service personnel authorized by Hewlett Packard Enterprise.
- For important safety, environmental, and regulatory information, see *Safety and Compliance Information for Server, Storage, Power, Networking, and Rack Products*, available at http://www.hpe.com/support/SafetyCompliance-EnterpriseProducts.

Attention	Il y a danger d'explosion s'il y a remplacement incorrect de la batterie. Remplacer uniquement avec une batterie du même type ou d'un type équivalent recommandé par le constructeur.Mettre au rebut les batteries usagées conformément aux instructions du fabricant.

Attention	The battery supplied with this product may contain perchlorate material. Special handling may apply in California and certain other states. See http://www.dtsc.ca.gov/hazardouswaste/perchlorate website for more information.



A risk of explosion exists if a battery is replaced by an incorrect type. Dispose of used batteries according to the battery disposal regulations for your country or region.

Connectivity standards

Table 33: Technology Standards and Safety Compliance

		Laser Safety Information		
Technology	**Compatible with these IEEE standards**	**EN/IEC Standard Compliance**	**SFP ("mini-GBIC") Lasers**	**SFP+Lasers**
10-T100-TX1000-T10GBASE-T	IEEE 802.3 10BASE-T IEEE 802.3u 100BASE-TX IEEE 802.3ab 1000BASE-T IEEE 802.3an 10GBASE-T(with transceiver)			
2.5G and 5G Twisted-Pair Copper	HPE Smart Rate IEEE 802.3bz			
100-FX	IEEE 802.3u 100BASE-FX	EN/IEC 60825	Class 1 Laser Product Laser Klasse 1	
1000-SX	IEEE 802.3z 1000BASE-SX	EN/IEC 60825	Class 1 Laser Product Laser Klasse 1	
1000-LX	IEEE 802.3z 1000BASE-LX	EN/IEC 60825	Class 1 Laser Product Laser Klasse 1	
1000-LH	(not an IEEE standard)	EN/IEC 60825	Class 1 Laser Product Laser Klasse 1	
10-Gig Direct Attach	(not an IEEE standard)			
10-Gig SR	IEEE 802.3ae 10GBASE-SR	EN/IEC 60825		Class 1 Laser Product Laser Klasse 1
10-Gig LRM	IEEE 802.3aq 10GBASE-LRM	EN/IEC 60825		Class 1 Laser Product

		Laser Safety Information		
Technology	Compatible with these IEEE standards	EN/IEC Standard Compliance	SFP ("mini-GBIC") Lasers	SFP+Lasers
				Laser Klasse 1
10-Gig LR	IEEE 802.3ae 10GBASE-LR	EN/IEC 60825		Class 1 Laser Product Laser Klasse 1
10-Gig ER	IEEE 802.3ae 10GBASE-ER	EN/IEC 60825		Class 1 Laser Product Laser Klasse 1
40-Gig SR4	IEEE 802.3ba 40GBASE-SR4	EN/IEC 60825		Class 1 Laser Product Laser Klasse 1
40-Gig eSR4	IEEE 802.3ba 40GBASE-SR4	En/IC 60825		Class 1 Laser Product Laser Klasse 1
40-Gig LR4	IEEE 802.3ae 40GBASE-LR4	EN/IC 60825		Class 1 Laser Product Laser Klasse 1

Chapter 7
Cabling and technology information

This section includes switch connector information and network cable information for cables used with the HPE Aruba Networking switches.

Incorrectly wired cabling is a common cause of problems for LAN communications. HPE Aruba Networking recommends that you work with a qualified LAN cable installer for assistance with your cabling requirements.

Cabling specifications

Table 34: Supported Cables

J9281D	HPE Aruba Networking 10G SFP+ to SFP+ 1m Direct Attach Copper Cable
J9283D	HPE Aruba Networking 10G SFP+ to SFP+ 3m Direct Attach Copper Cable

Table 35: Supported Transceivers

J4858D	HPE Aruba Networking 1G SFP LC SX 500m MMF Transceiver
J4859D	HPE Aruba Networking 1G SFP LC LX 10km SMF Transceiver
J4860D	HPE Aruba Networking 1G SFP LC LH 70km SMF Transceiver
J8177D	HPE Aruba Networking 1G SFP RJ45 T 100m Cat5e Transceiver
J9150D	HPE Aruba Networking 10G SFP+ LC SR 300m MMF Transceiver
J9151E	HPE Aruba Networking 10G SFP+ LC LR 10km SMF Transceiver
J9153D	HPE Aruba Networking 10G SFP+ LC ER 40km SMF Transceiver
JL563B	HPE Aruba Networking 10GBASE-T SFP+ RJ-45 30m Cat6A Transceiver
J9152D	HPE Aruba Networking 10G SFP+ LC LRM 220m MMF Transceiver
R9X54A	HPE Aruba Networking 10G LC BiDi 40km-D 1330/1270 XCVR
R9X55A	HPE Aruba Networking 10G LC BiDi 40km-U 1270/1330 XCVR

Table 36: Cabling Specifications

Twisted-pair copper	10 Mbps Operation	Category 3, 4 or 5, 100-ohm unshielded twisted-pair (UTP) or shielded twisted-pair (STP) cable, complying with IEEE 802.3 10BASE-T specifications.
	100 Mbps Operation	Category 5, 100-ohm UTP, or STP cable, complying with IEEE 802.3u 100BASE-TX specifications.
	1000 Mbps Operation	Category 5, 100-ohm 4-pair UTP or STP cable, complying with IEEE 802.3ab 1000BASE-T specifications—Category 5e or better is recommended.
	2.5 Gbps Operation	Category 5e, 100-ohm-4-pair UTP, or STP cable, complying with IEEE 802.bz 1000BASE-T specifications.
	5 Gbps Operation	Category 5e or better, 100-ohm-4-pair UTP or STP cable. Category 6 or better is recommended.
	10 Gbps Operation	Category 6 or 6A, 100-ohm 4-pair UTP cable, or Category 6A or 7, 100-ohm 4-pair STP cable, complying with IEEE 802.3an 10GBASE-T specifications.
Twinaxial copper	Direct attach cables	One-piece devices consisting of a cable with SFP+ connectors permanently attached to each end, complying with SFF 8431 SFP+ specifications.
Multimode fiber		62.5/125 µm or 50/125 µm (core/cladding) diameter, low metal content, graded index fiber-optic cables, complying with the ITU-T G.651 and ISO/IEC 793-2 Type A1b or A1a standards respectively.[1]
Single mode fiber		9/125 µm (core/cladding) diameter, low metal content fiber-optic cables, complying with the ITU-T G.652 and ISO/IEC 793-2 Type B1 standards.
[1] A mode conditioning patch cord may be needed for some Gigabit-LX and 10-Gigabit LRM installations.		

Note on Multimode and Single Mode Fiber

Attenuators may be required for some transceiver techs and cable length

Note on 1000BASE-T Cable Requirements

The Category 5 networking cables that work for 100BASE-TX connections also work for 1000BASE-T, as long as all four-pairs are connected. But, for the most robust connections, use cabling that complies with the Category 5e specifications. This specification is described in Addendum 5 to the TIA-568-A standard (ANSI/TIA/EIA-568-A-5).

Because of the increased speed provided by 1000BASE-T (Gigabit-T), network cable quality is more important than for either 10BASE-T or 100BASE-TX. Cabling plants being used to carry 1000BASE-T networking must comply with the IEEE 802.3ab standards. In particular, the cabling must pass tests for Attenuation, Near-End Crosstalk (NEXT), and Far-End Crosstalk (FEXT). Additionally, unlike the cables for 100BASE-TX, the 1000BASE-T cables must pass tests for Equal-Level Far-End Crosstalk (ELFEXT) and Return Loss.

When testing your cabling, be sure to include the patch cables that connect the switch and other end devices to the patch panels on your site. The patch cables are frequently overlooked when testing cable and they must also comply with the cabling standards.

Note on HPE Smart Rate 2.5 Gb/s Cable Requirements

The 2.5 Gb/s Smart Rate operates on cable installations that are designed to support 1000BASE-T operation. The cabling installation must meet the 1000BASE-T link segment characteristics described in IEEE 802.3-2012. The installation must also meet the Category 5e or Class D limits described in the ANSI/TIA/EIA 568-C.2 and ISO/IEC 11801 standards, respectively.

Note on HPE Smart Rate 5Gb/s Cable Requirements

The 5 Gb/s Smart Rate operates on most Category 5e and Category 6 cable installations. Category 5e or Class D installations must meet the ANSI/TIA/EIA 568-C.2 or ISO/IEC 11801 transmission parameter limits extended to 200MHz. Category 6 or Class E installations must meet their respective transmission parameter limits as described in ANSI/TIA/EIA 568-C.2 or ISO/IEC 11801.

Also, to transmission performance, 5 Gb/s Smart Rate can be sensitive to alien noise. Such noise can come from either nearby cables or background noise from the environment. Therefore, cabling must additionally be tested for Alien Near-End Crosstalk (ANEXT) and Alien Equal-Level-Far-End Crosstalk (AELFEXT). Depending on the cabling installation, the magnitude of alien crosstalk may further limit the maximum supported cabling distance.

Hewlett Packard Enterprise recommends doing cable dressing carefully and in compliance with recommendations in the TIA TSB-155-A and ISO/IEC TR-24750.

Note on 10GBASE-T Cable Requirements

The Category 6 networking cables that work for 1000BASE-T connections may work for 10GBASE-T. The distance must be less than 55m, and the cable installation must be tested for compliance to IEEE requirements. But, for the most robust connections, use cabling that complies with the Category 6A or Category 7 specifications, as described in the TIA-568-C (ANSI/TIA-568-C.2) and ISO/IEC 11801 standards. 10GBASE-T is a sophisticated technology that relies upon high-quality cable installations. It is sensitive to Alien Near End Crosstalk (ANEXT). This can affect the cable due to other cables placed close to the data cables. Hewlett Packard Enterprise recommends doing cable dressing carefully and in compliance with recommendations in the TIA TSB-155A.

Like 1000BASE-T, 10GBASE-T requires testing of all the crosstalk and return loss parameters described preceding "Note on 1000BASE-T cable requirements", and also ANEXT.

In addition to ANEXT, 10GBASE-T is more sensitive to external electrical noise in the environment. Hewlett Packard Enterprise recommends keeping radio transmitters and other sources of high frequency continuous wave radio frequency away from LAN cables.

When testing your cabling, be sure to include the patch cables that connect the switch and other end devices to the patch panels on your site. The patch cables are frequently overlooked when testing cable and they must also comply with the cabling standards. For 10GBASE-T, Category 6 patch cables are sensitive to movement once link has been established, and could cause link to drop if moved. Therefore, Hewlett Packard Enterprise recommends using Category 6A patch cables. As an alternative, use cable management options to tie down (dress) the Category 6 patch cables so they cannot move.

For Conducted and Radiated Immunity in accordance with EN55024, HPE Aruba Networking switches are limited to Performance Criteria A with shielded cables (CAT6/6A).

Mode conditioning patch cord

The following information applies to installations in which multimode fiber-optic cables are connected to a Gigabit-LX port or a 10-Gigabit LRM port. Multimode cable has a design characteristic called “Differential Mode Delay”, which requires the transmission signals be “conditioned” to compensate for the cable design and thus prevent resulting transmission errors.

Under certain circumstances, depending on the cable used and the lengths of the cable runs, an external Mode Conditioning Patch Cord may need to be installed between the Gigait-LX or 10-Gigabit LRM transmitting device and the multimode network cable to provide the transmission conditioning. If you experience a high number of transmission errors on those ports, usually CRC or FCS errors, you may need to install one of these patch cords between the fiber-optic port in your switch and your multimode fiber-optic network cabling, at both ends of the network link.

The patch cord consists of a short length of single mode fiber cable coupled to graded-index multimode fiber cable on the transmit side, and only multimode cable on the receive side. The section of single mode fiber is connected in such a way that it minimizes the effects of the differential mode delay in the multimode cable.



Most of the time, if you are using good quality graded-index multimode fiber cable that adheres to the standards listed in Cabling specifications, there should not be a need to use mode conditioning patch cords in your network. This is especially true if the fiber runs in your network are relatively short.
For 10-Gigabit LRM using OM3 cable (50 µm multimode @ 1500/500 MHz*km), a mode conditioning patch cord is not required. Other multimode cables may require mode conditioning patch cords to achieve the LRM maximum distances.

Twisted-pair cable/connector pin-outs

Auto-MDIX Feature:

The 10/100/1000-T ports support the IEEE 802.3ab standard, which includes the “Auto MDI/MDI-X” feature. In the default configuration, “Auto”, the ports on the switch will automatically detect the type of port on the connected device and operate as either an MDI or MDI-X port, whichever is appropriate. So for any connection, a straight-through twisted-pair cable can be used. You no longer have to use crossover cables, although crossover cables can also be used for any of the connections.

If you connect a 6200 F/M switch twisted-pair port to another switch or hub, which typically have MDI-X ports, the 6200 F/M port automatically operates as an MDI port. If you connect it to an end node, such as a server or PC, which typically have MDI ports, the 6200 F/M switch port operates as an MDI-X port. In all cases, you can use standard straight-through cables or crossover cables.

If you use a correctly-wired crossover cable, though, the switch will still be able to automatically detect the MDI/MDI-X operation and link correctly to the connected device.

Other Wiring Rules:

- All twisted-pair wires used for 10 Mbps, and 100 Mbps operation must be twisted through the entire length of the cable. The wiring sequence must conform to EIA/TIA 568-B (not USOC). See “Pin Assignments” later in this appendix for a listing of the signals used on each pin.
- For 1000Base-T connections, all four pairs of wires in the cable must be available for data transmission.
- For 10 Mbps connections to the ports, you can use Category 3, 4, or 5 unshielded twisted-pair cable, as supported by the IEEE 802.3 Type 10Base-T standard.
- For 100 Mbps connections to the ports, use 100-ohm Category 5 UTP or STP cable only, as supported by the IEEE 802.3u Type 100Base-TX standard.
- For 1000 Mbps and SmartRate connections, 100-ohm Category 5e or better cabling is recommended.

Straight-through twisted-pair cable for 10 Mbps or 100 Mbps network connections

Because of the Aruba Auto-MDIX operation of the 10/100 ports on the switch, for all network connections, to PCs, servers or other end nodes, or to hubs or other switches, you can use straight-through cables.

If any of these ports are given a fixed configuration, for example 100 Mbps/Full Duplex, the ports operate as MDI-X ports, and straight-through cables must be then used for connections to PC NICs and other MDI ports.

Figure 30 *Cable Diagram*

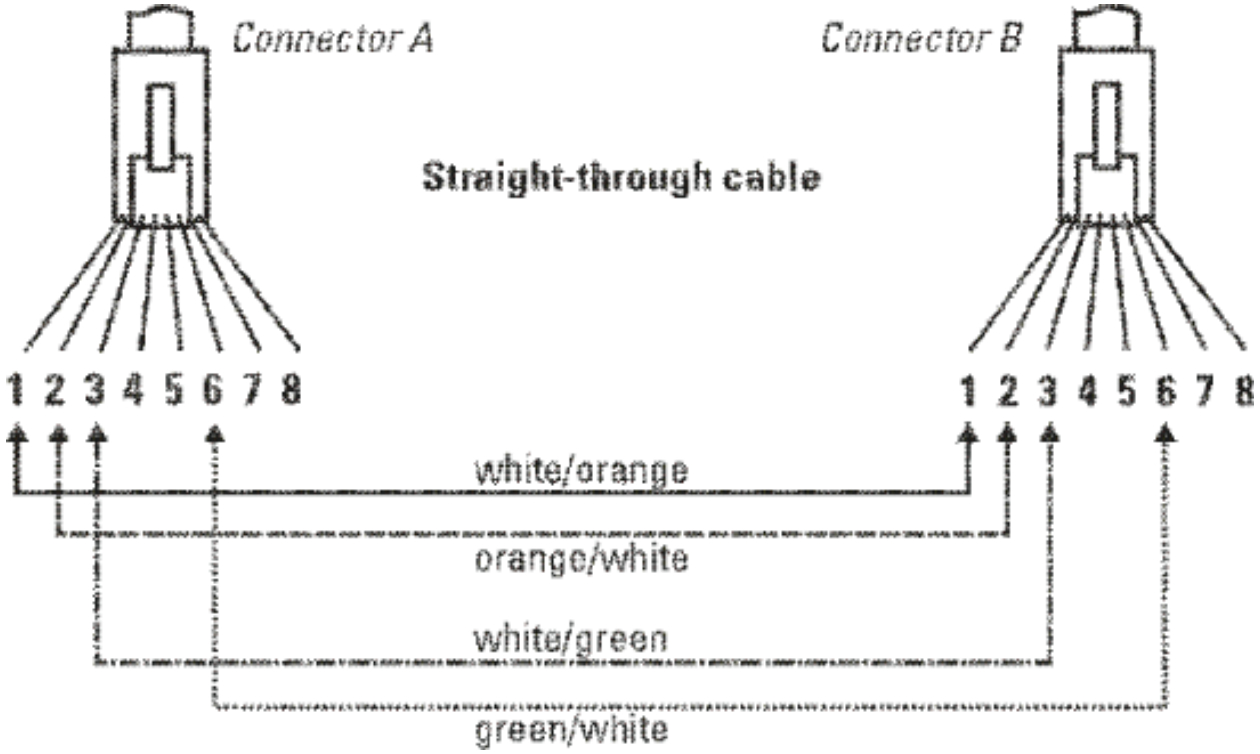

Pins 1 and 2 on connector “A” must be wired as a twisted pair to pins 1 and 2 on connector “B”.

Pins 3 and 6 on connector “A” must be wired as a twisted pair to pins 3 and 6 on connector “B”.

Pins 4, 5, 7, and 8 are not used in this application, although they may be wired in the cable.

Table 37: *Pin Assignments*

Switch End (MDI-X)			**Computer, Transceiver, or Other End**	
Signal	**Pins**		**Pins**	**Signal**
receive +	1	<————————	1	transmit +
receive -	2	<————————	2	transmit -
transmit +	3	————————>	3	receive +
transmit -	6	————————>	6	receive -

Crossover twisted-pair cable for 10 Mbps or 100 Mbps network connection

The Auto-MDIX operation of the 10/100 ports on the switch also allows you to use crossover cables for all network connections, to PCs, servers or other end nodes, or to hubs or other switches.

If any of these ports are given a fixed configuration, for example 100 Mbps/Full Duplex, the ports operate as MDI-X ports, and crossover cables must be then used for connections to hubs or switches or other MDI-X network devices.

Figure 31 *Cable Diagram*

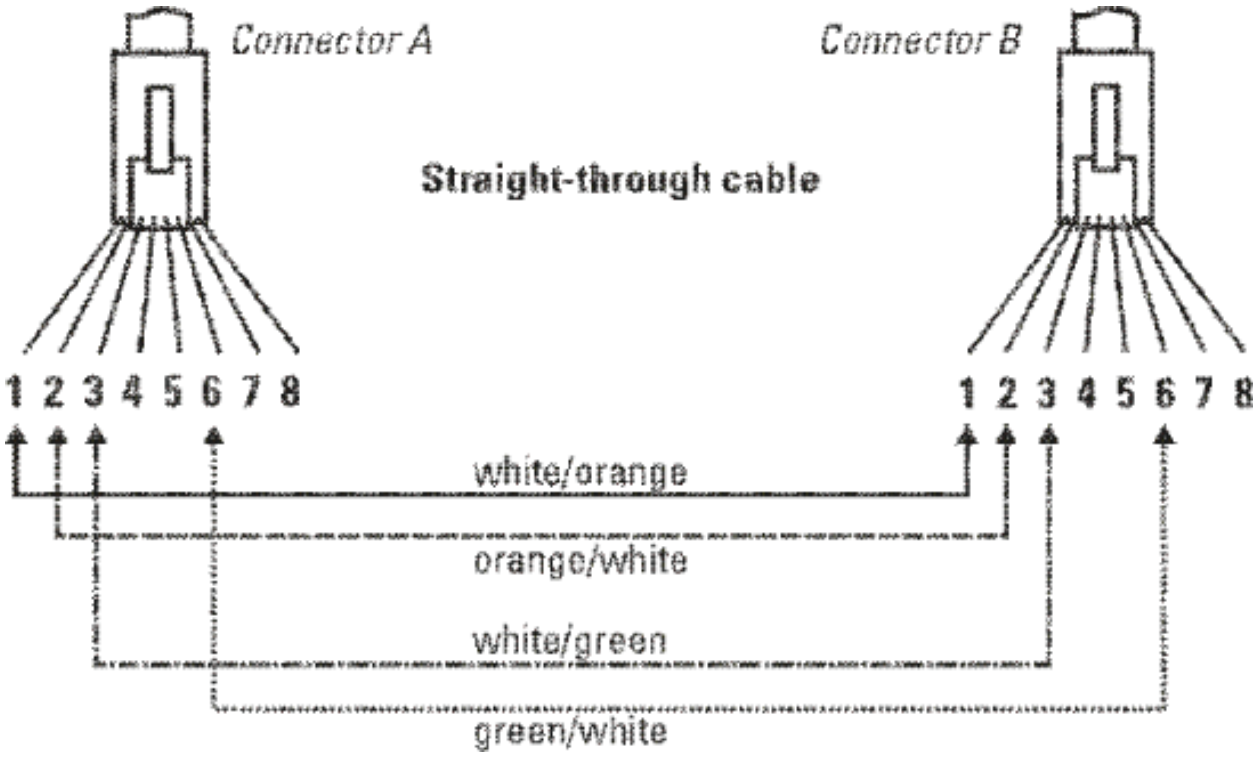

Pins 1 and 2 on connector “A” must be wired as a twisted pair to pins 1 and 2 on connector “B”.

Pins 3 and 6 on connector “A” must be wired as a twisted pair to pins 3 and 6 on connector “B”.

Pins 4, 5, 7, and 8 are not used in this application, although they may be wired in the cable.

Table 38: *Pin Assignments*

Switch end (MDI-X)		Hub or switch port, or other MDI-X port end	
Signal	Pins	Pins	Signal
receive +	1	6	transmit -
receive -	2	3	transmit +
transmit +	3	2	receive -
transmit -	6	1	receive +

Straight-through twisted-pair cable for 1000 Mbps network connections

1000Base-T connections require that all four pairs or wires be connected.

Figure 32 *Cable Diagram*

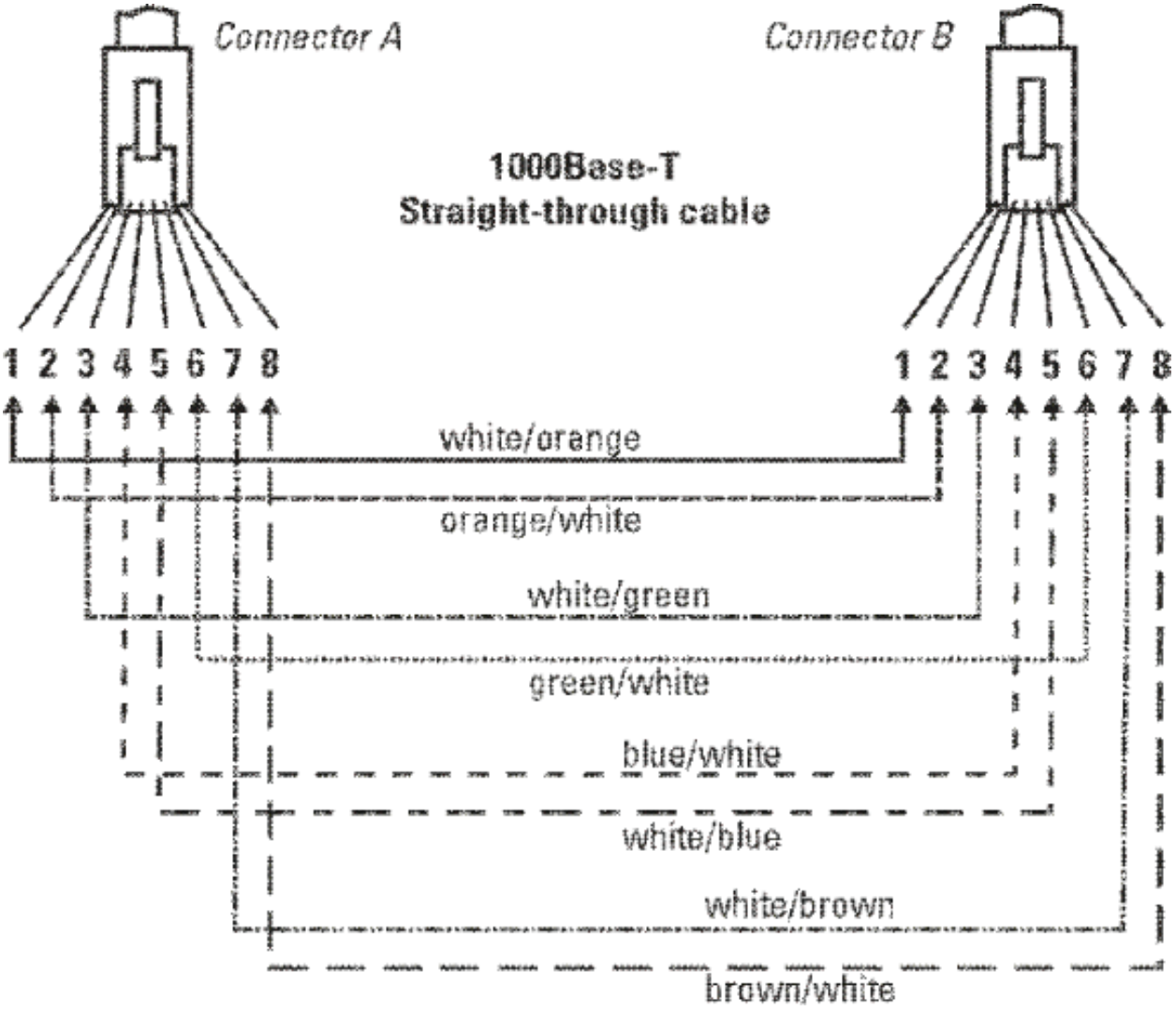

Pins 1 and 2 on connector “A” must be wired as a twisted pair to pins 1 and 2 on connector “B”.

Pins 3 and 6 on connector “A” must be wired as a twisted pair to pins 3 and 6 on connector “B”.

Pins 4 and 5 on connector “A” must be wired as a twisted pair to pins 4 and 5 on connector “B”.

Pins 7 and 8 on connector “A” must be wired as a twisted pair to pins 7 and 8 on connector “B”.

For 1000Base-T operation, all four pairs of wires are used for both transmit and receive.

Chapter 8
Support and Other Resources

Access Aruba support and updates, and view warranty and regulatory information

Accessing HPE Aruba Networking Support

HPE Aruba Networking Support Services	https://www.arubanetworks.com/support-services/
HPE Networking Support Portal	https://networkingsupport.hpe.com/home
North America telephone	1-800-943-4526 (US & Canada Toll-Free Number) +1-408-754-1200 (Primary - Toll Number) +1-650-385-6582 (Backup - Toll Number - Use only when all other numbers are not working)
International telephone	https://www.arubanetworks.com/support-services/contact-support/

Be sure to collect the following information before contacting Support:

- Technical support registration number (if applicable)
- Product name, model or version, and serial number
- Operating system name and version
- Firmware version
- Error messages
- Product-specific reports and logs
- Add-on products or components
- Third-party products or components

Other useful sites

Other websites that can be used to find information:

Airheads social forums and Knowledge Base	https://community.arubanetworks.com/
Software licensing	https://lms.arubanetworks.com/
End-of-Life information	https://www.arubanetworks.com/support-services/end-of-life/
HPE Aruba Networking software and documentation	https://asp.arubanetworks.com/downloads

Accessing Updates

You can access updates from the Aruba Support Portal or the HPE My Networking Website.

HPE Networking Support Portal

https://networkingsupport.hpe.com/home

If you are unable to find your product in the HPE Networking Support Portal, you may need to search My Networking, where older networking products can be found:

My Networking

https://www.hpe.com/networking/support

To view and update your entitlements, and to link your contracts and warranties with your profile, go to the Hewlett Packard Enterprise Support Center **More Information on Access to Support Materials** page:

https://support.hpe.com/portal/site/hpsc/aae/home/

Access to some updates might require product entitlement when accessed through the Hewlett Packard Enterprise Support Center. You must have an HP Passport set up with relevant entitlements.

Some software products provide a mechanism for accessing software updates through the product interface. Review your product documentation to identify the recommended software update method.

To subscribe to eNewsletters and alerts:

https://networkingsupport.hpe.com/home (requires an active HPE Aruba NetSupport Portal (ASP) account to manage subscriptions). Security notices are viewable without an ASP account.

Warranty Information

To view warranty information for your product, go to https://www.arubanetworks.com/support-services/product-warranties/.

Regulatory Information

To view the regulatory information for your product, view the *Safety and Compliance Information for Server, Storage, Power, Networking, and Rack Products*, available at https://www.hpe.com/support/Safety-Compliance-EnterpriseProducts

Additional regulatory information

HPE Aruba Networking is committed to providing our customers with information about the chemical substances in our products as needed to comply with legal requirements, environmental data (company programs, product recycling, energy efficiency), and safety information and compliance data, (RoHS and WEEE). For more information, see https://www.arubanetworks.com/company/about-us/environmental-citizenship/.

Documentation Feedback

HPE Aruba Networking is committed to providing documentation that meets your needs. To help us improve the documentation, send any errors, suggestions, or comments to Documentation Feedback (docsfeedback-switching@hpe.com). When submitting your feedback, include the document title, part number, edition, and publication date located on the front cover of the document. For online help content, include the product name, product version, help edition, and publication date located on the legal notices page.