Juniper Networks | Engineering Simplicity

EX4000 Switch Hardware Guide

Published
2025-04-24

Juniper Networks, Inc.
1133 Innovation Way
Sunnyvale, California 94089
USA
408-745-2000
www.juniper.net

Juniper Networks, the Juniper Networks logo, Juniper, and Junos are registered trademarks of Juniper Networks, Inc. in the United States and other countries. All other trademarks, service marks, registered marks, or registered service marks are the property of their respective owners.

Juniper Networks assumes no responsibility for any inaccuracies in this document. Juniper Networks reserves the right to change, modify, transfer, or otherwise revise this publication without notice.

EX4000 Switch Hardware Guide
Copyright © 2025 Juniper Networks, Inc. All rights reserved.

The information in this document is current as of the date on the title page.

YEAR 2000 NOTICE

Juniper Networks hardware and software products are Year 2000 compliant. Junos OS has no known time-related limitations through the year 2038. However, the NTP application is known to have some difficulty in the year 2036.

END USER LICENSE AGREEMENT

The Juniper Networks product that is the subject of this technical documentation consists of (or is intended for use with) Juniper Networks software. Use of such software is subject to the terms and conditions of the End User License Agreement ("EULA") posted at https://support.juniper.net/support/eula/. By downloading, installing or using such software, you agree to the terms and conditions of that EULA.

Table of Contents

About This Guide | ix

1 Fast Track: Initial Installation

Fast Track to Rack Installation and Power | 2

- Install the EX4000-8P, EX4000-12T, EX4000-12P, or EX4000-12MP on a Desk | 2
- Install the EX4000-24P, EX4000-24T, EX4000-24MP, EX4000-48P, EX4000-48T, and EX4000-48MP in a Rack | 3
- Connect to Power | 6

Claim, Onboard, and Configure EX4000 | 9

2 System Overview and Specifications

EX4000 System Overview | 12

- EX4000 Ethernet Switch | 12
- Acoustic Noise Measurements for EX4000 Switches | 16
- Mounting Options and Cable Management for EX4000 Switches | 16

EX4000 Models and Specifications | 18

EX4000 Chassis | 40

- Chassis Physical Specifications for EX4000 Switches | 40
- Chassis Status LEDs on EX4000 Switches | 41
- LEDs on the Management Port on EX4000 Switches | 45
- LEDs on the RJ-45 Network Ports, Virtual Chassis Ports/Uplink Ports on EX4000 Switches | 47

Cooling System and Airflow in an EX4000 Switch | 51

EX4000 Power System | 58

- Power Supply in EX4000 Switches | 58

3 Site Planning and Preparation

Site Preparation Checklist for EX4000 Switches | 64

EX4000 Site Guidelines and Requirements | 65

Environmental Requirements and Specifications for EX4000 Switches | **66**

General Site Guidelines | **68**

Site Electrical Wiring Guidelines | **68**

Rack Requirements | **69**

Cabinet Requirements for EX4000 Switches | **71**

Clearance Requirements for Airflow and Hardware Maintenance for EX4000 Switches | **73**

4 **Installation and Configuration**

Install the EX4000 Switch | 80

Unpack the EX4000 Switch | **81**

Packing List for an EX4000 Switch | **82**

Update Base Installation Data | **83**

Mount an EX4000 Switch on Two Posts in a Rack or Cabinet (EX4000-8P, EX4000-12T, EX4000-12P, EX4000-12MP, EX4000-24P, EX4000-24T, EX4000-24MP, EX4000-48P, EX4000-48T, and EX4000-48MP) | **84**

Mount an EX4000 Switch on Four Posts in a Rack or Cabinet (EX4000-24P, EX4000-24T, EX4000-24MP, EX4000-48P, EX4000-48T, and EX4000-48MP) by using EX-4PST-RMK | **87**

Mount an EX4000 Switch in a Recessed Position in a Rack or Cabinet (EX4000-24P, EX4000-24T, EX4000-24MP, EX4000-48P, EX4000-48T, and EX4000-48MP) by using EX-4PST-RMK | **91**

Mount an EX4000 Switch in a Rack or Cabinet by Using the Enhanced 4-post JNP-4PST-RMK-1U-E Rack Mount Kit (EX4000-24P, EX4000-24T, EX4000-24MP, EX4000-48P, EX4000-48T, and EX4000-48MP) | **95**

Mount the Device by Using the Enhanced JNP-4PST-RMK-1U-E Rack Mount Kit On a Square Hole Rack | **95**

Mount the Device by Using the Enhanced JNP-4PST-RMK-1U-E Rack Mount Kit On a Threaded Hole Rack | **100**

Mount an EX4000 Switch on a Wall (EX4000-8P, EX4000-12T, EX4000-12P, and EX4000-12MP) | **105**

Mounting an EX4000 Switch on a Desk (EX4000-8P, EX4000-12T, EX4000-12P, and EX4000-12MP) | **110**

Mounting an EX4000 Switch Under a Desk or Other Level Surface (EX4000-8P, EX4000-12T, EX4000-12P, and EX4000-12MP) | **111**

Mounting an EX4000 Switch on a Ferrous Wall using Magnet Pads (EX4000-8P, EX4000-12T, EX4000-12P, and EX4000-12MP) | **113**

Mounting an EX4000 Switch on a DIN Rail (EX4000-8P, EX4000-12T, EX4000-12P, and EX4000-12MP) | **116**

Unmounting an EX4000 Switch From a DIN Rail (EX4000-8P, EX4000-12T, EX4000-12P, and EX4000-12MP) | **118**

Attaching the Cable Guard to Protect Cable Connections (EX4000-8P, EX4000-12T, EX4000-12P, and EX4000-12MP) | **120**

Connect the EX4000 to Power | 123

Connect Earth Ground to an EX4000 Switch | **123**

Connect AC Power to an EX4000 Switch | **128**

Managing EX4000 Switches Using Juniper Mist™ | 132

Register Products—Mandatory to Validate SLAs | 137

Configure Junos OS on an EX4000 Switch | 137

EX4000 Default Configuration | **137**

Connect and Configure an EX4000 Switch | **148**

Revert to the Default Factory Configuration on an EX Series Switch | **154**

Revert to the EX Series Switch Factory-Default Configuration Using the `request system zeroize` Command | **155**

Revert to the EX Series Switch Factory-Default Configuration Using the `load factory-default` Command | **156**

Revert to the EX Series Switch Factory-Default Configuration or Zeroize the Switch Using Pin Hole Reset Button | **156**

5 **Troubleshoot Hardware**

Troubleshoot Alarm Conditions of EX4000 | 159

Chassis Component Alarm Conditions on EX4000 Switches | **159**

Troubleshoot Temperature Alarms in EX Series Switches | **161**

6 **Contact Customer Support and Return the Chassis or Components**

Contacting Customer Support | 169

Return an EX4000 Chassis or Component | 170

How to Return an EX4000 Switch for Repair or Replacement | **170**

Locate the Serial Number on an EX4000 Switch | **171**

List the Switch Details with the CLI | **172**

Locate the Chassis Serial Number ID Label on an EX4000 Switch | **176**

Contact Customer Support to Obtain a Return Material Authorization | **176**

Pack an EX4000 Switch or Component for Shipping | **177**

Pack an EX4000 Switch for Shipping | **178**

Pack EX4000 Switch Components for Shipping | **179**

7 **Safety and Compliance Information**

Safety Information for EX4000 | 182

General Safety Guidelines and Warnings | 182

Definitions of Safety Warning Levels | 183

Qualified Personnel Warning | 185

Warning Statement for Norway and Sweden | 186

Fire Safety Requirements | 186

Installation Instructions Warning | 187

Chassis and Component Lifting Guidelines | 188

Restricted Access Warning | 189

Ramp Warning | 190

Rack-Mounting and Cabinet-Mounting Warnings | 191

Grounded Equipment Warning | 195

Radiation from Open Port Apertures Warning | 195

Laser and LED Safety Guidelines and Warnings | 196

Maintenance and Operational Safety Guidelines and Warnings | 199

General Electrical Safety Guidelines Warnings | 205

Action to Take After an Electrical Accident | 207

Prevention of Electrostatic Discharge Damage | 207

AC Power Electrical Safety Guidelines | 209

AC Power Disconnection Warning | 210

Multiple Power Supplies Disconnection Warning | 210

TN Power Warning | 211

EX Series Agency Approvals | 212

Compliance Statements for EMC Requirements for EX Series Switches | 214

Compliance Statements for Acoustic Noise for EX Series Switches | 218

Statements of Volatility for Juniper Network Devices | 218

8 Appendix

EX4000 Network Cable and Transceiver Planning | 224

- Pluggable Transceivers and Cables Supported on EX4000 Switches | 224
- SFP+ Direct Attach Copper Cables for EX Series Switches | 225
- Overview of EX Series Switches: Fiber-Optic Cable Signal Loss, Attenuation, and Dispersion | 227
- Calculate the Fiber-Optic Cable Power Budget for EX Series Devices | 228
- Calculating the Fiber-Optic Cable Power Margin for EX Series Devices | 229

EX4000 Management Cable Specifications and Pinouts | 231

- Management Cable Specifications | 231
- Console Port Connector Pinout Information | 232
- USB Port Specifications for an EX Series Switch | 233
- RJ-45 Management Port Connector Pinout Information | 234
- RJ-45 Port, SFP Port, and SFP+ Port Connector Pinouts | 234
- RJ-45 to DB-9 Serial Port Adapter Pinout Information | 238

Connect the EX4000 Switch to External Devices | 239

- Connect a Device to a Network for Out-of-Band Management | 239

Connect a Device to a Management Console Using an RJ-45 Connector | **240**

Connect the EX4000 Switch to the Network | 242

Install a Transceiver | **242**

Connect a Fiber-Optic Cable | **245**

Maintain Fiber-Optic Cables | 246

Connect a Fiber-Optic Cable | **246**

Disconnect a Fiber-Optic Cable | **247**

How to Handle Fiber-Optic Cables | **248**

Maintain Transceivers | 248

Remove a Transceiver | **249**

Install a Transceiver | **250**

About This Guide

Use this guide to install hardware and perform initial software configuration, routine maintenance, and troubleshooting for the EX4000 switch. After completing the installation and basic configuration procedures covered in this guide, refer to the Junos OS documentation for information about further software configuration.

CHAPTER 1

Fast Track: Initial Installation

IN THIS CHAPTER

- Fast Track to Rack Installation and Power | **2**
- Claim, Onboard, and Configure EX4000 | **9**

Fast Track to Rack Installation and Power

SUMMARY

This procedure guides you through the simplest steps for the most common installation to get your EX4000 switch in a rack and connect it to power. Have more complex installation needs? See "Install the EX4000 Switch" on page 80

IN THIS SECTION

- Install the EX4000-8P, EX4000-12T, EX4000-12P, or EX4000-12MP on a Desk | 2
- Install the EX4000-24P, EX4000-24T, EX4000-24MP, EX4000-48P, EX4000-48T, and EX4000-48MP in a Rack | 3
- Connect to Power | 6

Install the EX4000-8P, EX4000-12T, EX4000-12P, or EX4000-12MP on a Desk

IN THIS SECTION

- What's in the Box? | 2

On-the-desk mounting is the default mounting option for the EX4000-8P, EX4000-12T, EX4000-12P, or EX4000-12MP switches. We'll walk you through how to install the switch on a desk. For the rest of the mounting options refer "Install the EX4000 Switch" on page 80.

What's in the Box?

- The EX4000-8P, EX4000-12T, EX4000-12P, or EX4000-12MP switch
- One AC power cord appropriate for your geographical location
- Power cord retainer
- Preinstalled dust covers for SFP ports
- Documentation roadmap card

NOTE: Do not block the vents on top of the switch to prevent the switch chassis from overheating.

Ensure that the desktop or any other level surface is stable and securely supported.

Before you install, review the following:

- "EX4000 Site Guidelines and Requirements" on page 65.
- General Safety Guidelines and Warnings.
- "Packing List for an EX4000 Switch" on page 82.

1. Place the switch on a flat, stable surface.

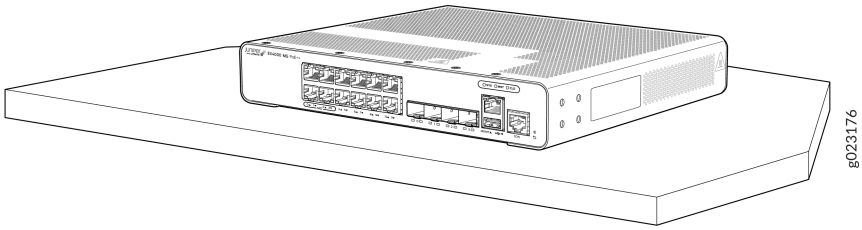

2. Ensure that the switch rests firmly on the desk or level surface.
3. Follow the instructions in "Connect to Power" on page 6.

Install the EX4000-24P, EX4000-24T, EX4000-24MP, EX4000-48P, EX4000-48T, and EX4000-48MP in a Rack

IN THIS SECTION

- What's in the Box? | 4
- What Else Do I Need? | 4

Two-post rack mounting is the default mounting option for the EX4000-24P, EX4000-24T, EX4000-24MP, EX4000-48P, EX4000-48T, and EX4000-48MP switches. The mounting kit that ships in the box has the brackets you need to install the switch in a two-post rack. We'll walk you through how

to install the switch in a two-post rack. For the rest of the mounting options refer "Install the EX4000 Switch" on page 80.

What's in the Box?

- EX4000-24P, EX4000-24T, EX4000-24MP, EX4000-48P, EX4000-48T, or EX4000-48MP switch
- One AC power cord appropriate for your geographical location.
- Power cord retainer
- Two-post rack mounting kit with four M4 x 6 mm screws
- Documentation roadmap card
- Preinstalled dust covers for SFP ports

What Else Do I Need?

- Someone to help you secure the switch to the rack
- Mounting screws to secure the switches to the rack
- A number two Phillips (+) screwdriver
- A serial-to-USB adapter (if your laptop doesn't have a serial port)
- An electrostatic discharge (ESD) grounding strap
- A management host such as a laptop or desktop PC
- Two M5 x 10 mm screws with washers to secure the grounding lug
- A grounding cable (yellow green): 6 AWG (13 mm^2), minimum 90°C stranded copper wire, or as permitted by the local code, with a Panduit LCD6-14AF-L or equivalent lug attached.

Before you install, review the following.

- "EX4000 Site Guidelines and Requirements" on page 65.
- General Safety Guidelines and Warnings.
- "Packing List for an EX4000 Switch" on page 82.

1. Place the switch on a flat, stable surface.

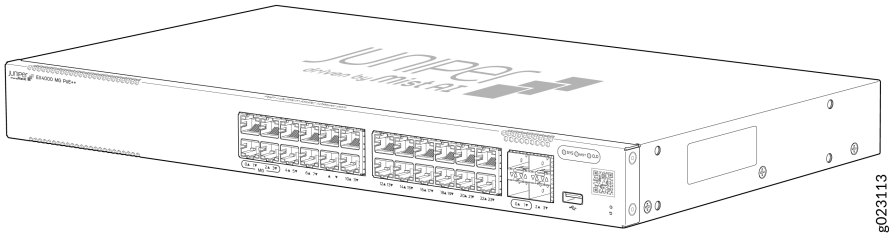

2. Wrap and fasten one end of the ESD grounding strap around your bare wrist, and connect the other end to a site ESD point.
3. Attach the mounting brackets using the four M4 x 6 mm screws. Use Phillips(+) screwdriver, number 2. Apply 9.11 lb-in (pounds per inch) of torque to the screws.

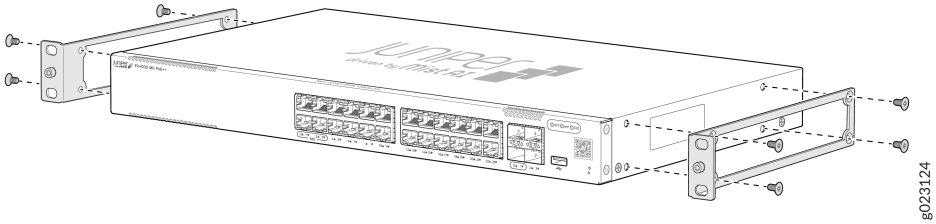

4. Lift the switch and position it in the rack. Because the fans are inbuilt with AFO (Air Flow Out)—front-to-back—direction, position the switch so that the rear of the switch is facing the hot aisle and the front of the switch is facing the cold aisle. Line up the bottom hole in each mounting bracket with a hole in each rack post, ensuring that the switch is level.

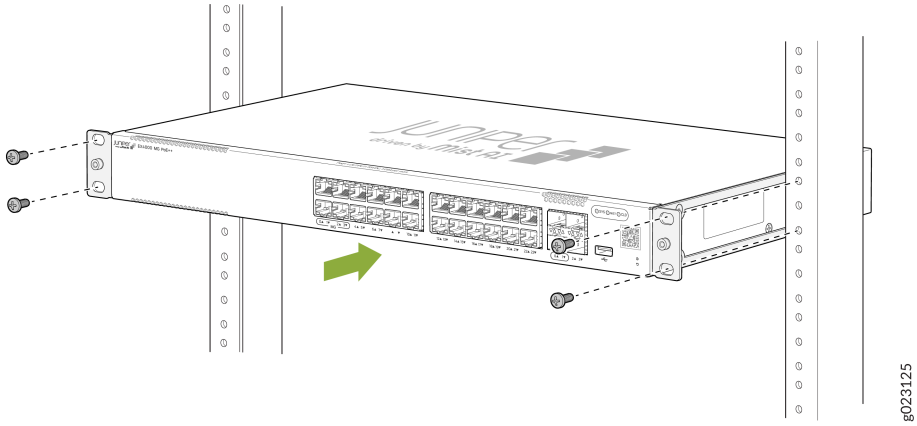

5. While you're holding the switch in place, have a second person insert and tighten the rack mount screws to secure the mounting brackets to the rack posts. Tighten the screws in the two bottom holes first, and then tighten the screws in the two top holes. Check that the mounting brackets on each side of the rack are lined up with each other.

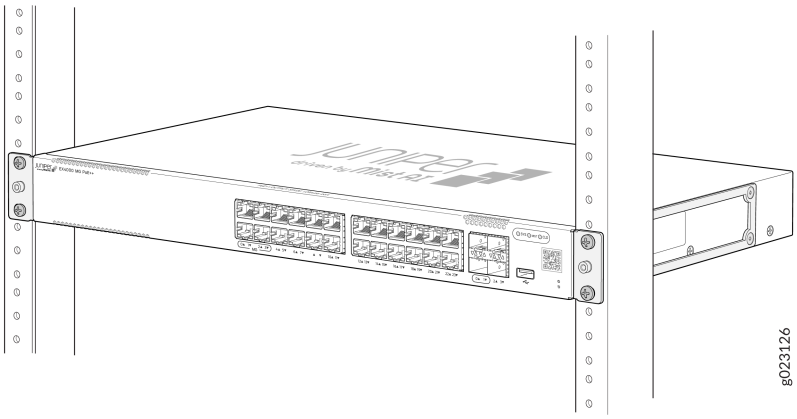

Connect to Power

IN THIS SECTION

- Ground the EX4000 Switch | 6
- Connect the Power Cord and Power On the Switch | 8

To connect the EX4000 switch to AC power, you must do the following:

Ground the EX4000 Switch

To ground the EX4000 switch, do the following:

1. Connect one end of the grounding cable to a proper earth ground, such as the rack in which the switch is mounted.
2. Place the grounding lug attached to the grounding cable over the protective earthing terminal on the rear panel.
   - Attach the grounding lug to the EX4000-8P Switch

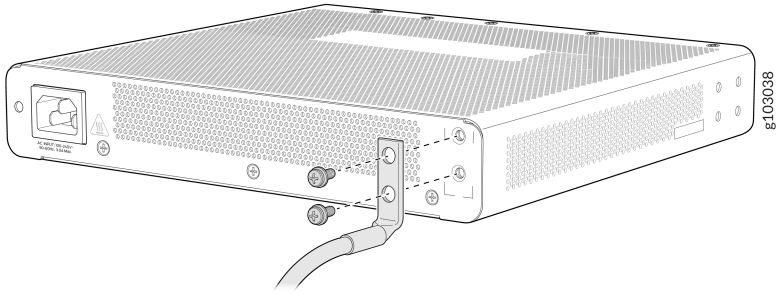

- Attach the grounding lug to the EX4000-12T Switch

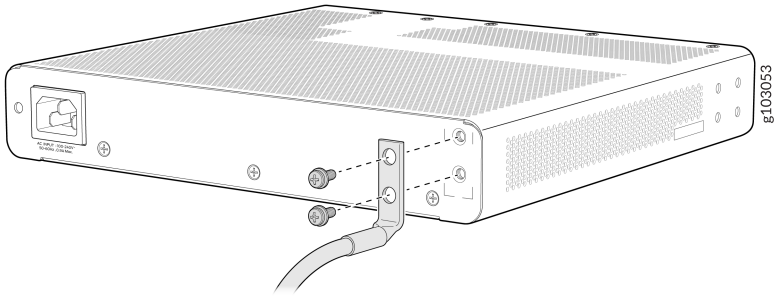

- Attach the grounding lug to the EX4000-12P and EX4000-12MP Switches

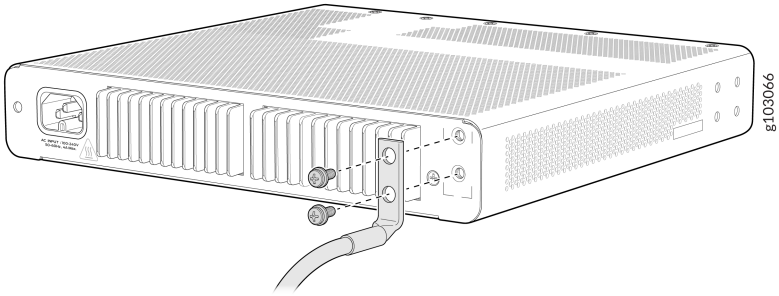

- Attach the grounding lug to the EX4000-24P, EX4000-24T, EX4000-48P, EX4000-48T, EX4000-24MP or EX4000-48MP Switch.

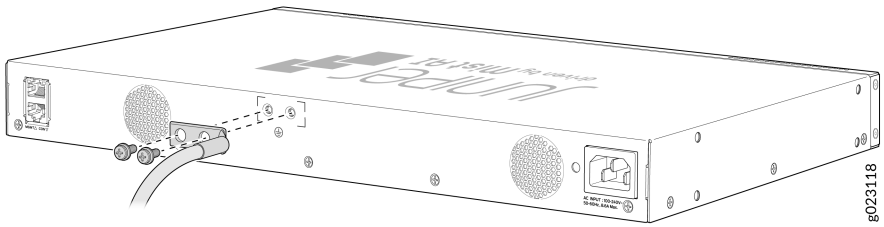

3. Secure the grounding lug to the protective earthing terminal with the M5 x 10 mm screws and washers.

4. Secure the grounding cable and ensure that it does not touch or block access to the switch.

Connect the Power Cord and Power On the Switch

For information about the supported AC power cord specifications, see Table 36 on page 61.

To connect the power cord, do the following:

1. On the rear panel of the switch, insert the power cord retainer into the power cord retainer slot.

   - Connect the Power Cord Retainer to EX4000-8P, EX4000-12T, EX4000-12P, and EX4000-12MP

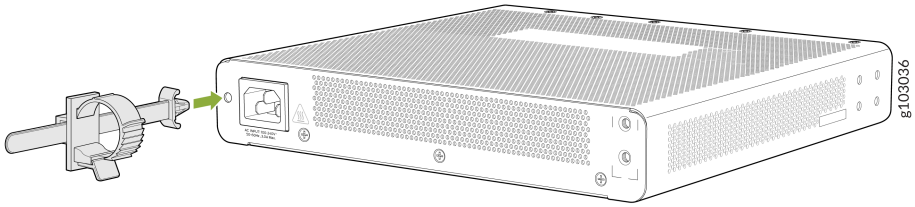

   - Connect the Power Cord Retainer to EX4000-24P, EX4000-24T, EX4000-48P, EX4000-48T, EX4000-24MP or EX4000-48MP

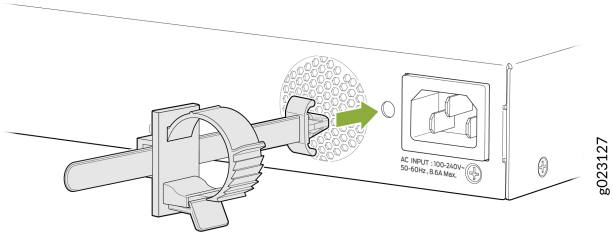

2. On the rear panel of the switch, insert the AC power cord plug into the power socket. Press the tab on the power cord retainer loop until the loop is snug against the base of the coupler.

   - Connect the power cord to EX4000-8P, EX4000-12P, EX4000-12T, and EX4000-12MP and secure it using the power cord retainer.

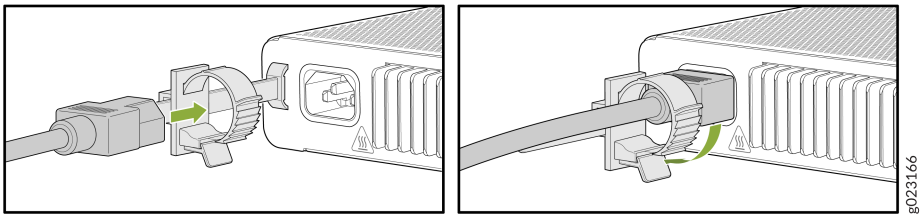

- Connect the power cord to the EX4000-24P, EX4000-24T, EX4000-48P, EX4000-48T, EX4000-24MP or EX4000-48MP and secure it using the power cord retainer.

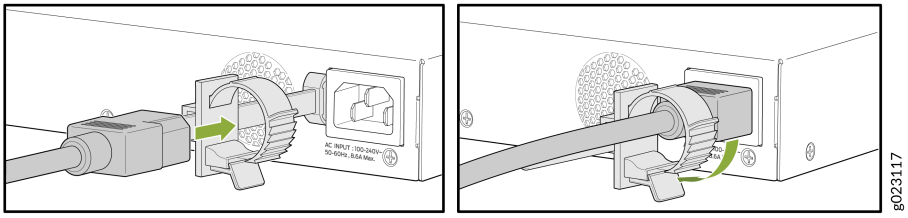

3. If the AC power source outlet has a power switch, turn it off.
4. Insert the power cord plug into an AC power source outlet.
5. If the AC power source outlet has a power switch, turn it on. The switch powers on as soon as you provide power to the switch. There is no power switch on the device.

Claim, Onboard, and Configure EX4000

SUMMARY

This topic provides you the pointers to onboard and configure EX4000 switches using Mist, or Junos CLI.

EX4000 switch is a cloud-ready switch, and you can manage this switch using Mist AI cloud portal. If you have a Mist Wired Assurance license, you can follow a few simple steps to get an EX4000 up and running in the Juniper Mist AI cloud portal. See Table 1 on page 10 for more information.

Table 1: Onboard and Configure EX4000 Using Mist

If you want to	Then
Claim and Onboard to Mist	See Cloud-Ready EX and QFX Switches with Mist
Configure Wired Assurance	See Juniper Mist Wired Configuration Guide
See all documentation available for Wired Assurance	Visit Wired Assurance Documentation

If you do not have a Mist Wired Assurance license, you can configure EX4000 using Junos CLI. See Table 2 on page 10 for more information.

Table 2: Configure EX4000 Using Junos CLI

If you want to	Then
Customize basic configuration	See "Configure Junos OS on an EX4000 Switch" on page 137
Explore the software features supported on EX4000	See Feature Explorer
Configure Junos features on EX4000	See User Guides

2

CHAPTER

System Overview and Specifications

IN THIS CHAPTER

- EX4000 System Overview | **12**
- EX4000 Models and Specifications | **18**
- EX4000 Chassis | **40**
- Cooling System and Airflow in an EX4000 Switch | **51**
- EX4000 Power System | **58**

EX4000 System Overview

SUMMARY

Learn about the key features and benefits, models and specifications of EX4000 switches.

IN THIS SECTION

- EX4000 Ethernet Switch | **12**
- Acoustic Noise Measurements for EX4000 Switches | **16**
- Mounting Options and Cable Management for EX4000 Switches | **16**

EX4000 Ethernet Switch

IN THIS SECTION

- EX4000 Switch Models | **14**
- Virtual Chassis | **15**
- Power over Ethernet Ports | **15**
- EX4000 Cooling System | **16**
- EX4000 Power System | **16**

The EX4000 switches are suitable for small, medium, and large campus and branch enterprise deployments. You can use the switch models in high, medium, or low-density environments. The EX4000 switch models have inbuilt fixed fans and PSUs.

You can manage the EX4000 switches from the cloud and on premise. The switches allow for simple, efficient, and scalable network management using cloud-based hosted management applications, on-premise management tools, and APIs.

EX4000 are cloud-native switches and can be managed in Mist Cloud delivering simplicity of deployment, configuration, and troubleshooting. These switches are designed keeping in mind that there is no IT staff available to provide technical IT support. You can deploy these switches in standalone or onboard them to Mist Cloud using Mist AI app with Zero-Touch Provisioning. After you onboard the switch, you can manage it using Mist Cloud for the life of the switch.

Managing these switches in Mist Cloud ensures good serviceability because of the following features of Mist Cloud:

- Remote Management and Monitoring—Mist Cloud provides a robust interface for remote management and monitoring. This includes features such as remote configuration, firmware updates, performance monitoring, and troubleshooting capabilities
- Centralized Control and Configuration—Mist Cloud offers a centralized dashboard that allows you to configure multiple switches across different locations from a single interface. This simplifies management tasks and reduces the need for physical access to each switch.
- Automated Provisioning—Mist Cloud provides the ability to automate the provisioning of switches when adding them to the network. This streamlines the deployment process and reduces the potential for configuration errors.
- Real-Time Analytics and Reporting—Mist Cloud provides real-time analytics and reporting on network performance, traffic patterns, and potential issues. This enables proactive identification of problems and quick resolution.
- Alerts and Notifications—Mist Cloud can send alerts and notifications when anomalies or issues are detected. This helps administrators take timely action to address any potential problems.
- Remote Diagnostics and Troubleshooting—Mist Cloud provides the ability to remotely diagnose and troubleshoot issues allowing to perform packet captures, remote console access, and other diagnostic tasks without needing physical access to the switches.
- Firmware and Software Updates—Mist Cloud allows for seamless and centralized firmware and software updates. Regular updates ensure that the switches are equipped with the latest features, performance enhancements, and security patches.
- Backup and Restore—Mist Cloud provides a reliable backup and restore mechanism for quickly recovering from network disruptions or failures. EX4000 switches can benefit from automated backup and easy restoration of configurations.
- User Permissions and Access Control—Mist Cloud offer granular user permissions and access controls. This ensures that only authorized personnel can make changes to switch configurations.
- Security—Mist Cloud uses robust security measures to protect your network data, configurations, and management access.
- Scalability—As your network grows, Mist Cloud can accommodate additional switches and devices without compromising performance.

EX4000 switches offer a strong hardware foundation with best-in-class security in combination with the simplicity of the cloud and the power of Mist AI. You can use Juniper Mist Wired Assurance to onboard, configure, and manage EX4000 from the cloud with minimal effort. You can manage EX4000 switches by using the CLI also.

EX4000 switches support Layer 2 (L2) and Layer 3 (L3) technologies. You can deploy the switches on the core, distribution, or access layers, providing a multisite network overlay.

These are the key benefits of EX4000 switches:

- *Compact solution*—The EX4000 switches are single-rack unit devices. They are ideal solutions for crowded wiring closets and access switch locations such as data centers, campuses, and branch offices. They provide carrier-class reliability of modular systems with the economics and flexibility of stackable platforms.
- *Virtual Chassis*—EX4000 switches support Virtual Chassis technology. You can interconnect up to 6 EX4000 switches to form a Virtual Chassis.
- *High availability*—EX4000 switches provide high availability through redundant power supplies and fans, graceful Routing Engine switchover (GRES), and nonstop bridging and routing when deployed in a Virtual Chassis configuration.
- *Mist Cloud managed*—EX4000 switches are built to be cloud native. You can manage activities and features such as onboarding, fast bootup, streaming telemetry, and fast changes (JET) from the Mist cloud. Even though the EX4000 switches are built specifically for management in the Mist cloud, you can manage them on premise if you prefer.
- *Multigigabit*—Newer wave 2 and 802.11ax access points can use higher interface speeds on network switches to support higher scale and bandwidth for users and applications.

EX4000 Switch Models

EX4000 line of switches consist of PoE multigigabit and gigabit port models. These switches run on AC power and support front-to-back airflow.

Table 3: EX4000 Switch Models

Multigigabit	Gigabit
"EX4000-12MP" on page 25	"EX4000-8P" on page 19
"EX4000-24MP" on page 31	"EX4000-12P" on page 23
"EX4000-48MP" on page 37	"EX4000-12T" on page 21
	"EX4000-24P" on page 27

Table 3: EX4000 Switch Models *(Continued)*

Multigigabit	Gigabit
	"EX4000-24T" on page 29
	"EX4000-48P" on page 33
	"EX4000-48T" on page 35

Virtual Chassis

EX4000 switches have dedicated Virtual Chassis ports (VCPs) that you can use to interconnect member switches of a Virtual Chassis. Only homogenous virtual chassis is supported; that is, you can connect any EX4000 switch in a virtual chassis. You can interconnect a maximum of 6 switches to form a Virtual Chassis. You can operate these interconnected switches as a single, logical device with a single IP address. If you operate the interconnected switches as a single device, you must use all the Virtual Chassis ports as Virtual Chassis ports or use all of them as network ports. You cannot mix multiple types of ports within a single, logical device.

For more information about Virtual Chassis, see Understanding EX Series Virtual Chassis.

Power over Ethernet Ports

EX4000 switches are available with or without Power over Ethernet Plus (PoE+/PoE++) capability. PoE+ and PoE++ enabled ports provide electrical power to devices such as IP phone, wireless access point, and security cameras through network cables, negating the need for separate power cords. The EX4000 models that support PoE+ and PoE++ can provide PoE power on all their RJ-45 downlink ports. These PoE models support fast PoE and perpetual PoE.

- EX4000-12MP, EX4000-24MP, and EX4000-48MP switches provide up to 60 W PoE per port.
- EX4000-8P, EX4000-12P, EX4000-24P, and EX4000-48P switches provide up to 30 W PoE per port.

For more information about PoE support on EX series switches, see Understanding PoE on EX Series Switches.

NOTE: IEEE 802.3at class 4 powered devices require category 5 or higher Ethernet cables.

EX4000 Cooling System

EX4000-8P, EX4000-12P, EX4000-12T, and EX4000-12MP have fanless convection cooling. EX4000-24P, EX4000-24T, EX4000-48P, EX4000-48T, EX4000-24MP and EX4000-48MP have inbuilt fixed AFO fans with front-to-back cooling.

EX4000 Power System

EX4000 switches have internal fixed AC PSUs.

Acoustic Noise Measurements for EX4000 Switches

Table 4 on page 16 provides the acoustic noise measurements for the EX4000 switch models.

Table 4: Acoustic Noise Measurements for EX4000 Switch Models

Switch model	PoE load	Acoustic Load dBA (sound pressure)	Sound Power (dB)	Sound Power (Bels)
EX4000-24MP	0% / 50% / 100%	26.8 / 26.9 / 35.2	38.7 / 39.8 / 4.79	3.87 / 3.98 / 4.79
EX4000-48MP	0% / 50% / 100%	26.7 / 27.5 / 37.3	37.5 / 38.1 / 39.1	3.8 / 3.8 / 3.9
EX4000-48P	0% / 50% / 100%	27.3 / 27.1 / 36.6	39 / 38.8 / 49.5	3.9 / 3.9 / 5
EX4000-48T	NA	24.2	35.6	3.6
EX4000-24P	0% / 50% / 100%	24.6 / 24.4 / 24.5	36.5 / 35.6 / 35.6	3.7 / 3.6 / 3.6
EX4000-24T	NA	23.1	33.9	3.4

Mounting Options and Cable Management for EX4000 Switches

The following table summarizes the mounting options for EX4000 switch models.

Table 5: EX4000 Mounting Options—Mounting Kits and Cable Guards

Mounting kit/Cable Guard	SKU No.	Provided/Orderable	Usage	Supported models
2-post rack mounting kit	EX4000-2PST-RMK	Orderable	2-post rack mounting kit (2-post rack mounting kit for 8 ports and 12 ports switches).	EX4000-8P, EX4000-12T, EX4000-12P, EX4000-12MP,
2-post rack mounting kit	EX-RMK	Provided	2-post rack mounting kit (2-post rack mounting kit for 24 ports and 48 ports switches).	EX4000-24P, EX4000-24T, EX4000-24MP, EX4000-48P, EX4000-48T, and EX4000-48MP
Adjustable 4-post rack-mount kit	EX-4PST-RMK	Orderable	4-post rack mounting (4-post rack mounting kit for 24 ports and 48 ports switches).	EX4000-24P, EX4000-24T, EX4000-48P, EX4000-48T,EX4000-24MP, EX4000-48MP
Enhanced 4-post toolless rack-mount kit	JNP-4PST-RMK-1U-E	Orderable	4-post toolless rack-mount kit for 24 ports nad 48 ports switches.	EX4000-24P, EX4000-24T, EX4000-48P, EX4000-48T, EX4000-24MP, EX4000-48MP
Wall mount kit/ Under the Desk mount kit	EX4000-WMK	Orderable	Wall mounting/ Under the desk mounting for 8 ports and 12 ports switches.	EX4000-8P, EX4000-12T, EX4000-12P, and EX4000-12MP

Table 5: EX4000 Mounting Options—Mounting Kits and Cable Guards *(Continued)*

Mounting kit/Cable Guard	SKU No.	Provided/Orderable	Usage	Supported models
Magnet mount kit	EX4000-MMK	Orderable	Magnet mounting for 8 ports and 12 ports switches.	EX4000-8P, EX4000-12T, EX4000-12P, and EX4000-12MP
Din Rail Mounting	EX4000-DRK	Orderable	DIN Rail Mounting for 8 ports and 12 ports switches.	EX4000-8P, EX4000-12T, EX4000-12P, EX4000-12MP
Cable Guard	EX4000-8-CGD	Orderable	Cable Guard for 8 port EX4000 switches	EX4000-8P,
Cable Guard	EX4000-12-CGD	Orderable	Cable Guard for 12 port EX4000 switches	EX4000-12T, EX4000-12P, and EX4000-12MP

EX4000 Models and Specifications

SUMMARY

This topic provides details of the EX4000 models and their specifications, information on number of ports and PoE support, throughput, and components in the shipment for each model.

IN THIS SECTION

- EX4000-8P | **19**
- EX4000-12T | **21**
- EX4000-12P | **23**
- EX4000-12MP | **25**
- EX4000-24P | **27**

- EX4000-24T | **29**
- EX4000-24MP | **31**
- EX4000-48P | **33**
- EX4000-48T | **35**
- EX4000-48MP | **37**

The EX4000 line of switches consist of both PoE+ and PoE++ gigabit port and multigigabit port models.

Let's take a look at the different EX4000 models and their specifications.

EX4000-8P

Figure 1 on page 19 shows the front panel of an EX4000-8P switch.

Figure 1: Front panel of an EX4000-8P Switch

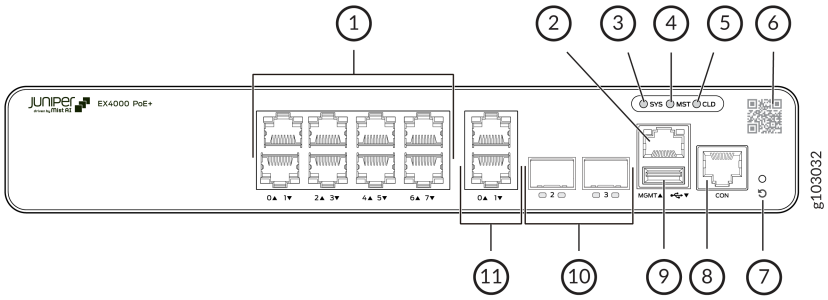

1– Eight 10/100/1000BASE-T RJ-45 network ports. Support PoE+ of up to 30 W per port.	7– Pin Hole Reset Button
2– RJ-45 management port (labeled **MGMT**)	8– RJ-45 console port (labeled **CON**)
3– Chassis status LEDs (labeled **SYS**)	9– USB 2.0 Type-A port
4– Chassis status LEDs (labeled **MST**)	10– Two 1-Gbps/10-Gbps SFP+ uplink ports (numbered 2 and 3). The ports can be converted into Virtual Chassis ports using CLI.

5– Chassis status LEDs (labeled **CLD**)	11– Two 1-Gbps 10/100/1000BASE-T RJ-45 network ports (numbered 0 and 1). These ports do not support PoE.
6– Claim code label	

NOTE: For EX4000-8P, ports 0, 1, 2, 3 initialize as network ports. The ports 0 and 1 support speeds of up to 1-Gbps and do not support Virtual Chassis (VC). Ports 2 and 3 can be converted to VC ports using CLI.

NOTE: For all switch models, to convert a Virtual Chassis port into an uplink port or network port, use `request virtual-chassis vc-port` *`delete`* `pic-slot` *`pic-slot-number`* `port` *`port-number`*. Read request virtual-chassis vc-port to read more.

Figure 2 on page 20 shows the rear panel of an EX4000-8P switch.

Figure 2: Rear panel of an EX4000-8P Switch

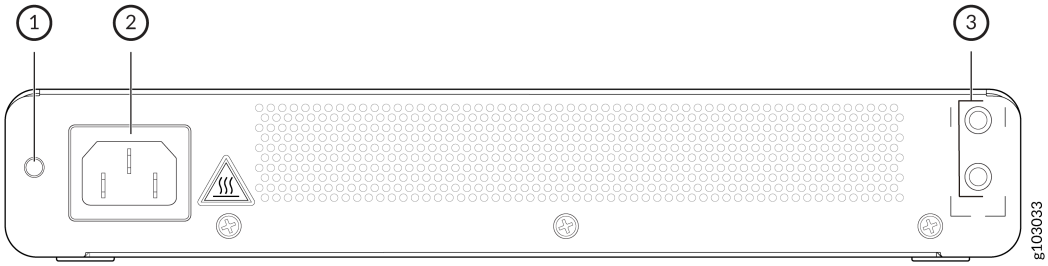

1– Power cord retainer slot	3– Protective earthing terminal
2– Power supply input terminal	

Table 6 on page 21 shows the cooling, power, and first Junos OS Release details of the EX4000-8P switch model.

Table 7 on page 21 describes the physical specifications and ports of EX4000-8P switches.

Table 6: EX4000-8P Switch Models—Cooling, Power Supply, and First Junos Release

Model number	Fan Modules	Power Supply	First Junos OS Release
EX4000-8P	NA. Natural convection cooling. Fan-less switch.	Internal power supply (Fixed PSU)	24.4R1-S2

Table 7: EX4000-8P Switches—Physical Specifications and Ports

Item	Description
Chassis Dimensions	**Height**—1.75 in (4.44 cm) **Width**—10.39 in (26.40 cm) **Depth**—9.64 in (24.5 cm)
Weight	5.73 lb (2.60 Kg)
Built-in ports	• 10/100/1000BASE-T RJ-45 PoE+ enabled network ports—8 • 10/100/1000BASE-T RJ-45 non-PoE network ports—2 (port number 0 and 1 in PIC1) • 1-Gbps/10-Gbps SFP+ uplink ports—2 (port number 2 and 3 in PIC 1). The ports can be converted into Virtual Chassis ports using CLI.
PoE Ports	8 - PoE+ (Delivers upto 30 W per port)
PoE Budget	120 W

EX4000-12T

Figure 3 on page 22 shows the front panel of an EX4000-12T switch.

Figure 3: Front panel of an EX4000-12T Switch

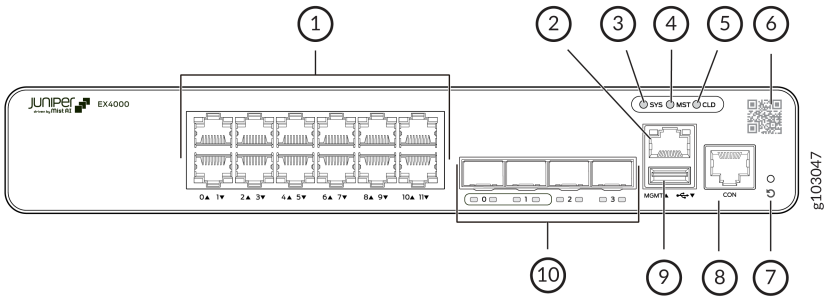

1– Twelve 10/100/1000BASE-T RJ-45 ports.	6– Claim code label
2– RJ-45 management port (labeled **MGMT**)	7– Pin Hole Reset Button
3– Chassis status LEDs (labeled **SYS**)	8– RJ-45 console port (labeled **CON**)
4– Chassis status LEDs (labeled **MST**)	9– USB 2.0 Type-A port
5– Chassis status LEDs (labeled **CLD**)	10– Two 1-Gbps/10-Gbps SFP+ Virtual Chassis ports (numbered 0 and 1) and two 1-Gbps/10-Gbps SFP+ uplink ports (numbered 2 and 3)

Figure 4 on page 22 shows the rear panel of an EX4000-12T switch.

Figure 4: Rear panel of an EX4000-12T Switch

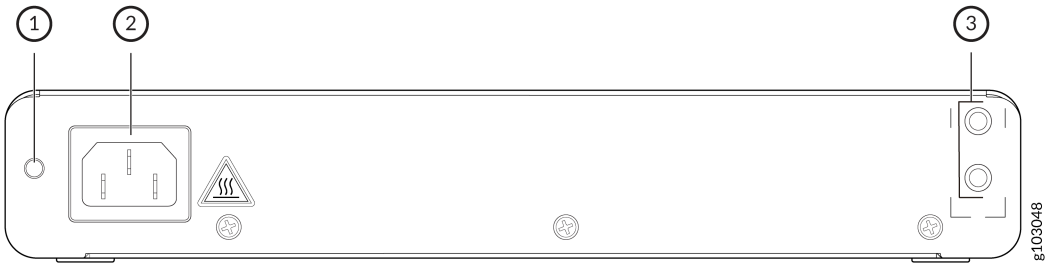

1– Power cord retainer slot	3– Protective earthing terminal
2– Power supply input terminal	

Table 8 on page 23 shows the cooling, power, and first Junos OS Release details of the EX4000-12T switch model.

Table 9 on page 23 describes the physical specifications and ports of EX4000-12T switches.

Table 8: EX4000-12T Switch Models - Cooling, Power Supply, and First Junos Release

Model number	Fan Modules	Power Supply	First Junos OS Release
EX4000-12T	NA. Natural Convection cooling. Fan-less switch.	Internal power supply (Fixed PSU).	24.4R1-S2

Table 9: EX4000-12T Switches—Physical Specifications and Ports

Item	Description
Chassis Dimensions	**Height**—1.75 in (4.44 cm) **Width**—10.39 in (26.40 cm) **Depth**—9.64 in (24.5 cm)
Weight	5.07 lb (2.30 Kg)
Built-in ports	• 10/100/1000BASE-T RJ-45 network ports—12 • 1GE/10GE SFP+ Virtual Chassis (VC) ports—2 VC is supported only with 10G SFP+ • 1GE/10GE SFP+ uplink ports—2
PoE Ports	NA
PoE Budget	NA

EX4000-12P

Figure 5 on page 24 shows the front panel of an EX4000-12P switch.

Figure 5: Front panel of an EX4000-12P Switch

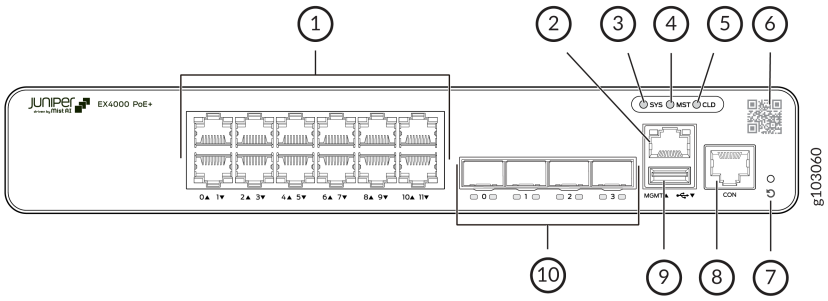

1– Twelve 10/100/1000BASE-T RJ-45 network ports providing PoE+ of up to 30 W per port	6– Claim code label
2– RJ-45 management port (labeled **MGMT**)	7– Pin Hole Reset Button
3– Chassis status LEDs (labeled **SYS**)	8– RJ-45 console port (labeled **CON**)
4– Chassis status LEDs (labeled **MST**)	9– USB 2.0 Type-A port
5– Chassis status LEDs (labeled **CLD**)	10– Two 1-Gbps/10-Gbps SFP+ Virtual Chassis ports (numbered 0 and 1) and two 1-Gbps/10-Gbps SFP+ uplink ports (numbered 2 and 3)

Figure 6 on page 24 shows the rear panel of an EX4000-12P switch.

Figure 6: Rear panel of an EX4000-12P Switch

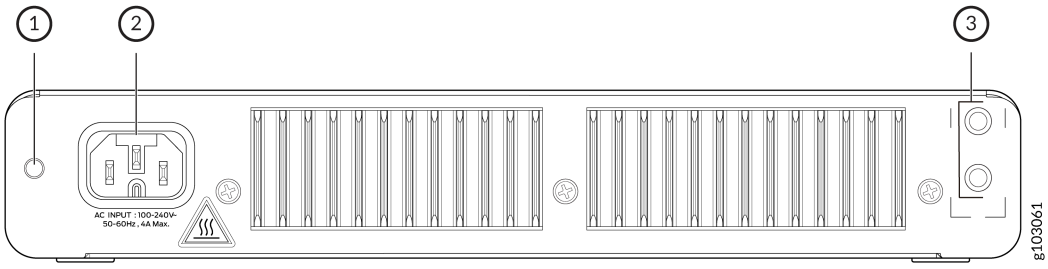

1– Power cord retainer slot	3– Protective earthing terminal
2– Power supply input terminal	

Table 10 on page 25 shows the cooling, power, and first Junos OS Release details of the EX4000-12P switch model.

Table 11 on page 25 describes the physical specifications and ports of EX4000-12P switches.

Table 10: EX4000-12P Switch Models - Cooling, Power Supply, and First Junos Release

Model number	Fan Modules	Power Supply	First Junos OS Release
EX4000-12P	NA. Natural Convection cooling. Fan-less switch.	Internal power supply (Fixed PSU).	24.4R1-S2

Table 11: EX4000-12P Switches—Physical Specifications and Ports

Item	Description
Chassis Dimensions	**Height**—1.75 in (4.44 cm) **Width**—10.39 in (26.40 cm) **Depth**—9.99 in (25.37 cm)
Weight	7.05 lb (3.2 Kg)
Built-in ports	• 10/100/1000BASE-T RJ-45 PoE+ enabled network ports—12 • 1GE/10GE SFP+ Virtual Chassis (VC) ports—2 VC is supported only with 10G SFP+ • 1GE/10GE SFP+ uplink ports—2
PoE Ports	12—PoE+ (Delivers upto 30 W per port)
PoE Budget	240 W

EX4000-12MP

Figure 7 on page 26 shows the front panel of an EX4000-12MP switch.

Figure 7: Front panel of an EX4000-12MP Switch

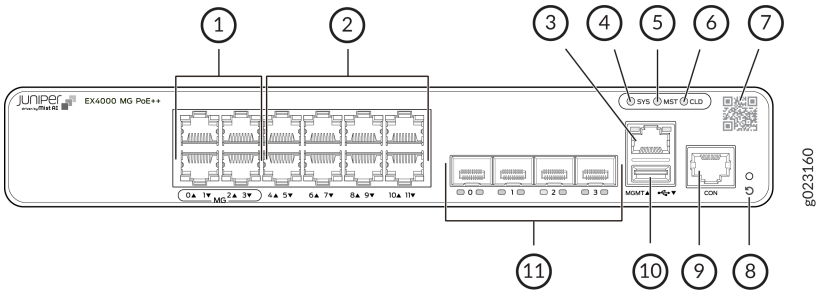

1– Four 100-Mbps/1-Gbps/2.5-Gbps RJ-45 ports. These ports support PoE-bt.	7– Claim code label
2– Eight 10/100/1000BASE-T RJ-45 network ports PoE-bt ports.	8– Pin Hole Reset Button
3– RJ-45 management port (labeled **MGMT**)	9– RJ-45 console port (labeled **CON**)
4– Chassis status LEDs (labeled **SYS**)	10– USB 2.0 Type-A port
5– Chassis status LEDs (labeled **MST**)	11– Two 1Gbps/10Gbps SFP+ Virtual Chassis ports (numbered 0 and 1) and two 1Gbps/10Gbps SFP+ uplink ports (numbered 2 and 3)
6– Chassis status LEDs (labeled **CLD**)	

Figure 8 on page 26 shows the rear panel of an EX4000-12MP switch.

Figure 8: Rear panel of an EX4000-12MP Switch

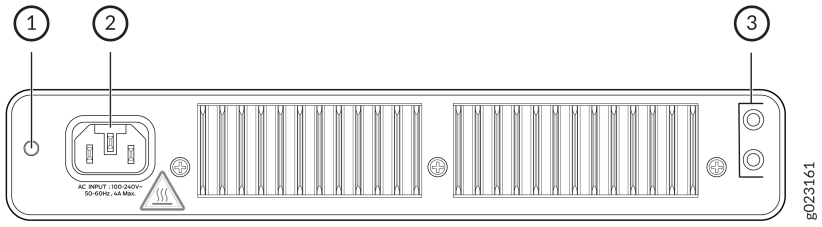

1– Power cord retainer slot	3– Protective earthing terminal
2– Power supply input terminal	

Table 12 on page 27 shows the cooling, power, and first Junos OS Release details of the EX4000-12MP switch model.

Table 13 on page 27 describes the physical specifications and ports of EX4000-12MP switches.

Table 12: EX4000-12MP Switch Models - Cooling, Power Supply, and First Junos Release

Model number	Fan Modules	Power Supply	First Junos OS Release
EX4000-12MP	NA. Natural Convection cooling. Fan-less switch.	Internal power supply (Fixed PSU).	24.4R1

Table 13: EX4000-12MP Switches—Physical Specifications and Ports

Item	Description
Chassis Dimensions	**Height**—1.75 in (4.44 cm) **Width**—10.39 in (26.40 cm) **Depth**—9.99 in (25.37 cm)
Weight	6.94 lb (3.2 Kg)
Built-in ports	• 10/100/1000BASE-T RJ-45 PoE-bt enabled network ports—8 • 100-Mbps/1-Gbps/2.5-Gbps PoE-bt enabled RJ-45 ports—4 • 1GE/10GE SFP+ Virtual Chassis ports—2 • 1GE/10GE SFP+ uplink ports—2
PoE Ports	12—PoE++ (Delivers upto 60 W per port)
PoE Budget	240 W

EX4000-24P

Figure 9 on page 28 shows the the front panel of an EX4000-24P switch.

Figure 9: Front panel of an EX4000-24P Switch

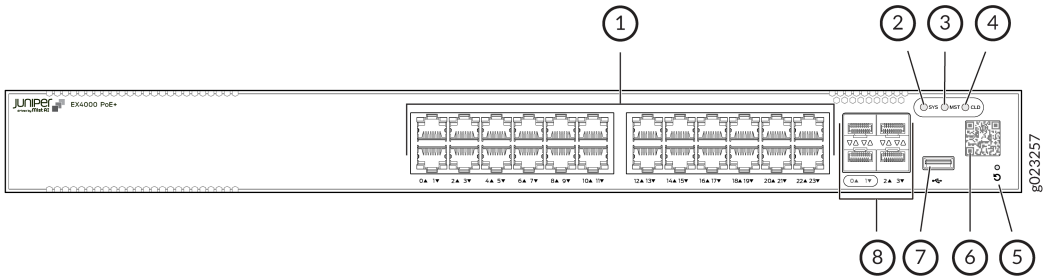

1– Twenty four 10/100/1000BASE-T RJ-45 network ports providing PoE+ of up to 30 W per port.	5– Pin Hole Reset button
2– Chassis status LEDs (labeled **SYS**)	6– Claim code label
3– Chassis status LEDs (labeled **MST**)	7– USB 2.0 Type-A port
4– Chassis status LEDs (labeled **CLD**)	8– Two 1Gbps/10Gbps SFP+ Virtual Chassis ports (numbered 0 and 1) and two 1Gbps/10Gbps SFP+ uplink ports (numbered 2 and 3)

Figure 10 on page 28 shows the rear panel of an EX4000-24P switch.

Figure 10: Rear panel of an EX4000-24P Switch

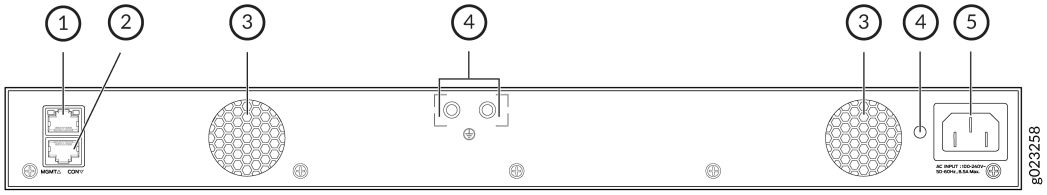

1– RJ-45 management port (labeled **MGMT**)	4– Protective earthing terminal
2– RJ-45 console port (labeled **CON**)	5– Power cord retainer slot
3– Vents of inbuilt fans	6– Power supply input terminal

Table 14 on page 29 lists the cooling, power, and first Junos OS Release details of the EX4000-24P switch model.

Table 15 on page 29 describes the physical specifications, ports, and throughput of EX4000-24P switches.

Table 14: EX4000-24P Switch Models - Cooling, Power, and First Junos OS Release

Model number	Fan Modules	Power Supply	First Junos OS Release
EX4000-24P	Two inbuilt fans with front-to-back airflow.	Internal power supply (Fixed PSU)	24.4R1-S2

Table 15: EX4000-24P Switches—Physical Specifications and Ports

Item	Description
Chassis Dimensions	**Height**—1.71 in (4.34cm) **Width**—17.36 in (44.10 cm) **Depth**—10.16 in (25.8 cm)
Weight	9.2 lb (4.2 Kg)
Built-in ports	• 10/100/1000BASE-T RJ-45 PoE+ enabled network ports —24 • 1Gbps/10Gbps SFP+ Virtual Chassis ports—2 • 1Gbps/10Gbps SFP+ uplink ports—2
PoE Ports	24 - PoE+ (Delivers upto 30 W per port)
PoE Budget	370 W

EX4000-24T

Figure 11 on page 30 shows the front panel of an EX4000-24T switch.

Figure 11: Front panel of an EX4000-24T Switch

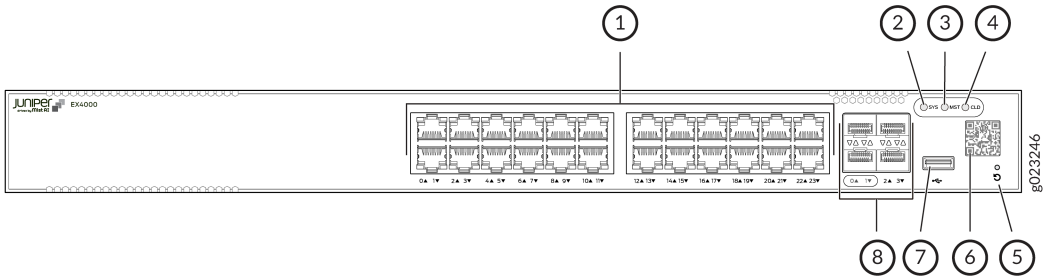

1– Twenty four 10/100/1000BASE-T RJ-45 network ports.	5– Pin Hole Reset button
2– Chassis status LEDs (labeled **SYS**)	6– Claim code label
3– Chassis status LEDs (labeled **MST**)	7– USB 2.0 Type-A port
4– Chassis status LEDs (labeled **CLD**)	8– Two 1 Gbps/10 Gbps SFP+ Virtual Chassis ports (numbered 0 and 1) and two 1 Gbps/10 Gbps SFP+ uplink ports (numbered 2 and 3)

Figure 12 on page 30 shows the rear panel of an EX4000-24T switch.

Figure 12: Rear panel of an EX4000-24T Switch

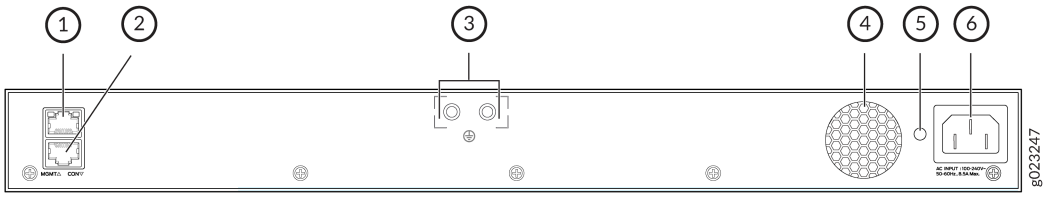

1– RJ-45 management port (labeled **MGMT**)	4– Vents of inbuilt fans
2– RJ-45 console port (labeled **CON**)	5– Power cord retainer slot
3– Protective earthing terminal	6– Power supply input terminal

Table 16 on page 31 lists the cooling, power, and first Junos OS Release details of the EX4000-24T switch model.

Table 17 on page 31 describes the physical specifications, ports, and throughput of EX4000-24T switches.

Table 16: EX4000-24T Switch Models - Cooling, Power, and First Junos OS Release

Model number	Fan Modules	Power Supply	First Junos OS Release
EX4000-24T	One inbuilt fans with front-to-back airflow.	Internal power supply (Fixed PSU)	24.4R1-S2

Table 17: EX4000-24T Switches—Physical Specifications and Ports

Item	Description
Chassis Dimensions	**Height**—1.71 in (4.34cm) **Width**—17.36 in (44.10 cm) **Depth**—8.43 in (21.40 cm)
Weight	6.3 lb (2.9 Kg)
Built-in ports	• 10/100/1000BASE-T RJ-45 network ports—24 • 1Gbps/10Gbps SFP+ Virtual Chassis ports—2 • 1Gbps/10Gbps SFP+ uplink ports—2
PoE Ports	NA
PoE Budget	NA

EX4000-24MP

Figure 13 on page 32 shows the the front panel of an EX4000-24MP switch.

Figure 13: Front panel of an EX4000-24MP Switch

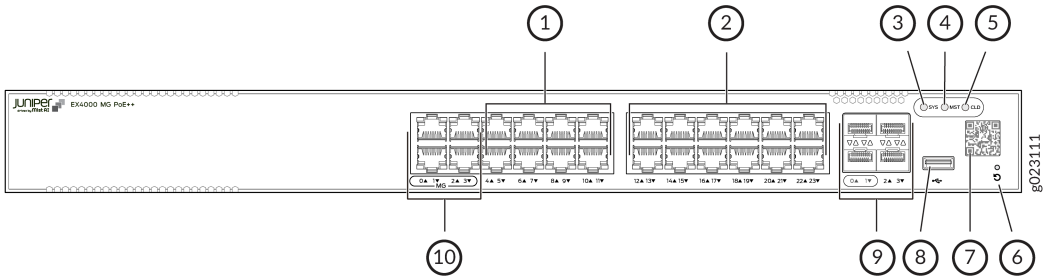

1– Eight 10/100/1000BASE-T RJ-45 network ports PoE-bt ports.	6– Pin Hole Reset button
2– Twelve 10/100/1000BASE-T RJ-45 network ports PoE-bt ports.	7– Claim code label
3– Chassis status LEDs (labeled **SYS**)	8– USB 2.0 Type-A port
4– Chassis status LEDs (labeled **MST**)	9– Two 1Gbps/10Gbps SFP+ Virtual Chassis ports (numbered 0 and 1) and two 1Gbps/10Gbps SFP+ uplink ports (numbered 2 and 3)
5– Chassis status LEDs (labeled **CLD**)	10– Four 100-Mbps/1-Gbps/2.5-Gbps RJ-45 ports. These ports support PoE-bt.

Figure 14 on page 32 shows the rear panel of an EX4000-24MP switch.

Figure 14: Rear panel of an EX4000-24MP Switch

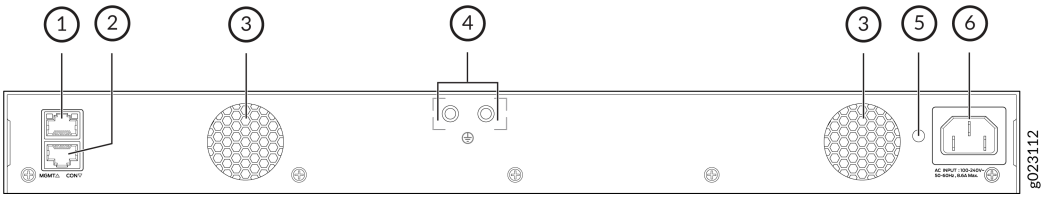

1– RJ-45 management port (labeled **MGMT**)	4– Protective earthing terminal
2– RJ-45 console port (labeled **CON**)	5– Power cord retainer slot
3– Vents of inbuilt fans	6– Power supply input terminal

Table 18 on page 33 lists the cooling, power, and first Junos OS Release details of the EX4000-24MP switch model.

Table 19 on page 33 describes the physical specifications, ports, and throughput of EX4000-24MP switches.

Table 18: EX4000-24MP Switch Models - Cooling, Power, and First Junos OS Release

Model number	Fan Modules	Power Supply	First Junos OS Release
EX4000-24MP	Two inbuilt fans with front-to-back airflow.	Internal power supply (Fixed PSU)	24.4R1

Table 19: EX4000-24MP Switches—Physical Specifications and Ports

Item	Description
Chassis Dimensions	**Height**—1.71 in (4.34 cm) **Width**—17.36 in (44.1 cm) **Depth**—10.16 in (25.80) cm
Weight	9.3 lb (4.1 Kg)
Built-in ports	• 10/100/1000BASE-T RJ-45 PoE-bt enabled network ports—20 • 100-Mbps/1-Gbps/2.5-Gbps PoE-bt enabled RJ-45—4 • 1Gbps/10Gbps SFP+ Virtual Chassis ports—2 • 1Gbps/10Gbps SFP+ uplink ports—2
PoE Ports	24—PoE++ (Delivers upto 60 W per port)
PoE Budget	480 W

EX4000-48P

Figure 15 on page 34 shows the front panel of an EX4000-48P switch.

Figure 15: Front panel of an EX4000-48P Switch

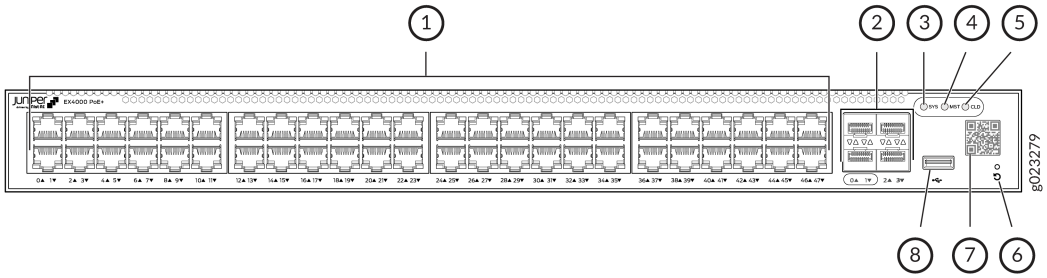

1– Forty eight 10/100/1000BASE-T RJ-45 network ports support PoE+ of up to 30 W per port.	5– Chassis status LEDs (labeled **CLD**)
2– Two 1Gbps/10Gbps SFP+ Virtual Chassis ports (numbered 0 and 1) and two 1Gbps/10Gbps SFP+ uplink ports (numbered 2 and 3)	6– Pin Hole Reset button
3– Chassis status LEDs (labeled **SYS**)	7– Claim code label
4– Chassis status LEDs (labeled **MST**)	8– USB 2.0 Type-A port

Figure 16 on page 34 shows the rear panel of an EX4000-48P switch.

Figure 16: Rear panel of an EX4000-48P Switch

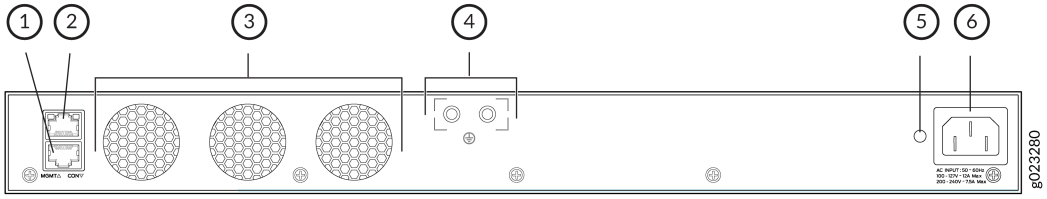

1– RJ-45 console port (labeled **CON**)	4– Protective earthing terminal
2– RJ-45 management port (labeled **MGMT**)	5– Power cord retainer slot
3– Vents of inbuilt fans	6– Power supply input terminal

Table 20 on page 35 lists the cooling, power, and first Junos OS Release details of the EX4000-48P switch model.

Table 21 on page 35 describes the physical specifications and ports of EX4000-48P switches.

Table 20: EX4000-48P Switch Models - Cooling, Power, and First Junos Release

Model number	Fan Modules	Power Supply	First Junos OS Release
EX4000-48P	Three inbuilt fixed fans with front-to-back airflow.	Internal power supply (Fixed PSU)	24.4R1-S2

Table 21: EX4000-48P Switches—Physical Specifications and Ports

Item	Description
Chassis Dimensions	**Height**—1.71 in (4.34cm) **Width**—17.36 in (44.10 cm) **Depth**—11.97 in (30.40 cm)
Weight	10.8 lb (4.9 Kg)
Built-in ports	• 10/100/1000BASE-T RJ-45 PoE+ enabled network ports —48 • 1Gbps/10Gbps SFP+ Virtual Chassis ports—2 • 1Gbps/10Gbps SFP+ uplink ports —2
PoE Ports	48—PoE+ (30 W by default)
PoE Budget	740 W

EX4000-48T

Figure 17 on page 36 shows the front panel of an EX4000-48T switch.

Figure 17: Front panel of an EX4000-48T Switch

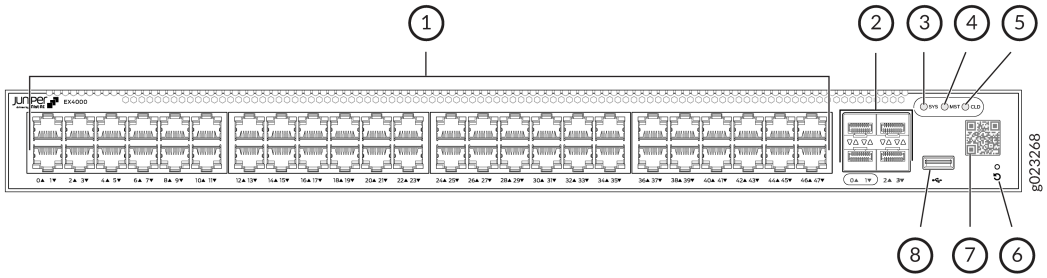

1– Forty eight 10/100/1000BASE-T RJ-45 network ports.	5– Chassis status LEDs (labeled **CLD**)
2– Two 1Gbps/10Gbps SFP+ Virtual Chassis ports (numbered 0 and 1) and two 1Gbps/10Gbps SFP+ uplink ports (numbered 2 and 3)	6– Pin Hole Reset button
3– Chassis status LEDs (labeled **SYS**)	7– Claim code label
4– Chassis status LEDs (labeled **MST**)	8– USB 2.0 Type-A port

Figure 18 on page 36 shows the rear panel of an EX4000-48T switch.

Figure 18: Rear panel of an EX4000-48T Switch

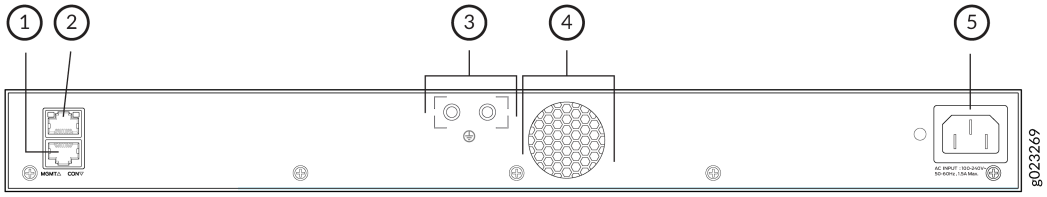

1– RJ-45 console port (labeled **CON**)	4– Vents of inbuilt fans
2– RJ-45 management port (labeled **MGMT**)	5– Power supply input terminal
3– Protective earthing terminal	

Table 22 on page 37 lists the cooling, power, and first Junos OS Release details of the EX4000-48T switch model.

Table 23 on page 37 describes the physical specifications and ports of EX4000-48T switches.

Table 22: EX4000-48T Switch Models - Cooling, Power, and First Junos Release

Model number	Fan Modules	Power Supply	First Junos OS Release
EX4000-48T	One inbuilt fixed fan with front-to-back airflow.	Internal power supply (Fixed PSU)	24.4R1-S2

Table 23: EX4000-48T Switches—Physical Specifications and Ports

Item	Description
Chassis Dimensions	**Height**—1.71 in (4.34cm) **Width**—17.36 in (44.10 cm) **Depth**—10.16 in (25.8 cm)
Weight	7.9 lb (3.6 Kg)
Built-in ports	• 10/100/1000BASE-T RJ-45 network ports—48 • 1Gbps/10Gbps SFP+ Virtual Chassis ports—2 • 1Gbps/10Gbps SFP+ uplink ports—2
PoE Ports	NA
PoE Budget	NA

EX4000-48MP

Figure 19 on page 38 shows the front panel of an EX4000-48MP switch.

Figure 19: Front panel of an EX4000-48MP Switch

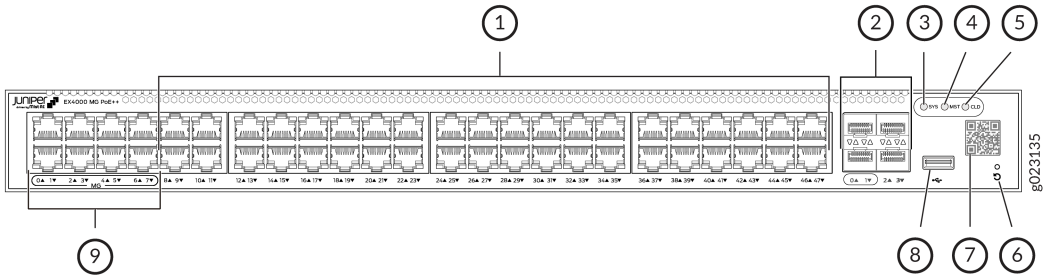

1– Forty 10/100/1000BASE-T RJ-45 network ports PoE-bt ports.	6– Pin Hole Reset button
2– Two 1Gbps/10Gbps SFP+ Virtual Chassis ports (numbered 0 and 1) and two 1Gbps/10Gbps SFP+ uplink ports (numbered 2 and 3)	7– Claim code label
3– Chassis status LEDs (labeled **SYS**)	8– USB 2.0 Type-A port
4– Chassis status LEDs (labeled **MST**)	9– Eight 100-Mbps/1-Gbps/2.5-Gbps RJ-45 ports. These ports support PoE-bt.
5– Chassis status LEDs (labeled **CLD**)	

Figure 20 on page 38 shows the rear panel of an EX4000-48MP switch.

Figure 20: Rear panel of an EX4000-48MP Switch

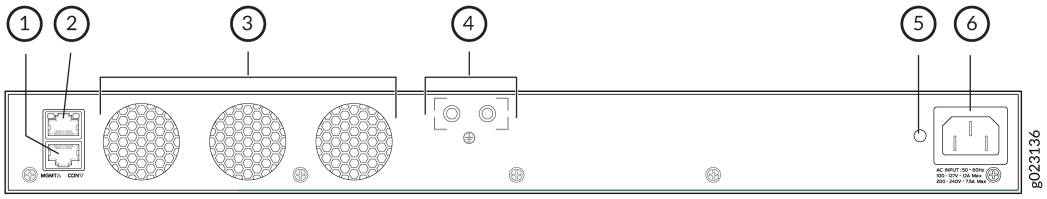

1– RJ-45 console port (labeled **CON**)	4– Protective earthing terminal
2– RJ-45 management port (labeled **MGMT**)	5– Power cord retainer slot
3– Vents of inbuilt fans	6– Power supply input terminal

Table 24 on page 39 lists the cooling, power, and first Junos OS Release details of the EX4000-48MP switch model.

Table 25 on page 39 describes the physical specifications and ports of EX4000-48MP switches.

Table 24: EX4000-48MP Switch Models - Cooling, Power, and First Junos Release

Model number	Fan Modules	Power Supply	First Junos OS Release
EX4000-48MP	Three inbuilt fixed fans with front-to-back airflow.	Internal power supply (Fixed PSU)	24.4R1

Table 25: EX4000-48MP Switches—Physical Specifications and Ports

Item	Description
Chassis Dimensions	**Height**—1.71 in (4.34 cm) **Width**—17.36 in (44.1 cm) **Depth**—11.97 in (30.40 cm)
Weight	11.68 lb (5.3 Kg)
Built-in ports	• 10/100/1000BASE-T RJ-45 PoE-bt enabled network ports—40 • Eight 100-Mbps/1-Gbps/2.5-Gbps PoE-bt enabled RJ-45 ports—8 • 1Gbps/10Gbps SFP+ Virtual Chassis ports—2 • 1Gbps/10Gbps SFP+ uplink ports—2
PoE Ports	48 PoE++ (60 W by default)
PoE Budget	960 W

EX4000 Chassis

IN THIS SECTION

- Chassis Physical Specifications for EX4000 Switches | 40
- Chassis Status LEDs on EX4000 Switches | 41
- LEDs on the Management Port on EX4000 Switches | 45
- LEDs on the RJ-45 Network Ports, Virtual Chassis Ports/Uplink Ports on EX4000 Switches | 47

Chassis Physical Specifications for EX4000 Switches

The EX4000 switch chassis is a rigid sheet-metal structure that houses all components of the switch.

Table 26: Physical Specifications of the EX4000 Switch Models

Model	Chassis Height	Chassis Width	Chassis Depth	Chassis Weight
EX4000-8P	1.75 in (4.44 cm)	10.39 in (26.40 cm)	9.64 in (24.5 cm)	5.73 lb (2.60 Kg)
EX4000-12T	1.75 in (4.44 cm)	10.39 in (26.40 cm)	9.64 in (24.5 cm)	5.07 lb (2.30 Kg)
EX4000-12P	1.75 in (4.44 cm)	10.39 in (26.40 cm)	9.99 in (25.37 cm)	7.05 lb (3.2 Kg)
EX4000-12MP	1.75 in (4.44 cm)	10.39 in (26.40 cm)	9.99 in (25.37 cm)	6.94 lb (3.2 Kg)
EX4000-24P	1.71 in (4.34 cm)	17.36 in (44.10 cm)	10.16 in (25.8 cm)	9.2 lb (4.2 Kg)
EX4000-24T	1.71 in (4.34 cm)	17.36 in (44.10 cm)	8.43 in (21.40 cm)	6.3 (2.9 Kg)
EX4000-24MP	1.71 in (4.34 cm)	17.36 in (44.1 cm)	10.16 in (25.80 cm)	9.3 lb (4.1 Kg)

Table 26: Physical Specifications of the EX4000 Switch Models *(Continued)*

Model	Chassis Height	Chassis Width	Chassis Depth	Chassis Weight
EX4000-48P	1.71 in (4.34cm)	17.36 in (44.10 cm)	11.97 in (30.40 cm)	10.8 lb (4.9 Kg)
EX4000-48T	1.71 in (4.34 cm)	17.36 in (44.10 cm)	10.16 in (25.8 cm)	7.9 lb (3.6 Kg)
EX4000-48MP	1.71 in (4.34 cm)	17.36 in (44.1 cm)	11.97 in (30.40 cm)	11.68 lb (5.3 Kg)

Chassis Status LEDs on EX4000 Switches

EX4000 switches have three chassis status LEDs (labeled **SYS**, **MST**, and **CLD**) on the front panel.

Figure 21: Chassis Status LEDs in EX4000 Switches

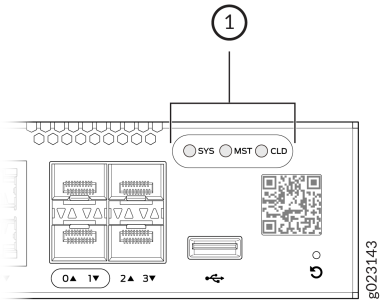

1– Chassis status LEDs

Table 27 on page 42 describes the system chassis status LED labeled as **SYS** on an EX4000 switch when in standalone mode.

Table 28 on page 42 describes the system chassis status LED labeled as **SYS** on an EX4000 switch when in Virtual Chassis mode.

Table 27: SYS Chassis Status LED on EX4000 Switches in Standalone Mode

LED Label	Color	State and Description
SYS	Blinking green	Switch is booting up.
	Solid green	Switch has booted up. No alarms.
	Amber	Minor Alarm
	Red	Major Alarm
	Blue	Appears on short press of Pin Hole Reset button. See "Revert to the EX Series Switch Factory-Default Configuration or Zeroize the Switch Using Pin Hole Reset Button" on page 156.
	Purple	Appears on long press of Pin Hole Reset button. See "Revert to the EX Series Switch Factory-Default Configuration or Zeroize the Switch Using Pin Hole Reset Button" on page 156.

Table 28: SYS Chassis Status LED on EX4000 Switches in Virtual Chassis Mode

LED Label	Virtual Chassis Member and LED Color			State and Description
	Master	Backup	Linecard	
SYS	Green	Green	Green	No alarms
	Red or Amber	Green	Green	Alarm present on master member
	Red or Amber	Red or Amber	Green	Alarm present on backup member

Table 28: SYS Chassis Status LED on EX4000 Switches in Virtual Chassis Mode *(Continued)*

LED Label	Virtual Chassis Member and LED Color			State and Description
	Master	Backup	Linecard	
	Red or Amber	Green	Red or Amber	Alarm present on linecard member

Table 29 on page 43 describes the chassis status LED labeled **MST** when the switch is in standalone mode.

Table 30 on page 44 describes the chassis status LED labeled **MST** when the switch is in virtual chassis mode.

You can view the colors of the LEDs remotely through the CLI by issuing the `show chassis led` operational mode command.

Table 29: MST Chassis Status LEDs on EX4000 Switches in Standalone Mode

LED Label	Color	State and Description
MST	Green	In a standalone switch: • On steadily—The switch is functioning normally. • Off—The switch is powered off or is halted.

Table 30: MST Chassis Status LEDs on EX4000 Switches in Virtual Chassis Mode

LED Label	Virtual Chassis Member	Color	State and Description
MST	Master	Green	• Solid green – The master switch has a member ID of 0 • Single blinks interspersed with 2.5 second pauses – The master switch has a member ID of 1. Likewise, the number of times the LED blinks before pausing is equal to its FPC number in the VC.
	Backup	Yellow	• Solid yellow – The backup switch has a member ID of 0. • Single blinks interspersed with 2.5 second pauses – The backup switch has a member ID of 1. Likewise, the number of times the LED blinks before pausing is equal to its FPC number in the VC.

Table 30: MST Chassis Status LEDs on EX4000 Switches in Virtual Chassis Mode *(Continued)*

LED Label	Virtual Chassis Member	Color	State and Description
	Linecard	White	• Solid white– The linecard has a member ID of 0. • Single blinks interspersed with 2.5 second pauses – The linecard has a member ID of 1. Likewise, the number of times the LED blinks before pausing is equal to its FPC number in the VC.

For information on the blink patterns of the **CLD** LED, which provide the cloud connection status of the switch, see Cloud Ready LED Blink Patterns or see Cloud Connection Process to understand how the cloud connection works.

LEDs on the Management Port on EX4000 Switches

The management port, labeled **MGMT**, located on the front panel of the EX4000-8P, EX4000-12T, EX4000-12P, and EX4000-12MP switch and the rear panels of EX4000-24P, EX4000-24T, EX4000-24MP, EX4000-48P, EX4000-48T and EX4000-48MP switches has two LEDs that indicate link activity and port status (see Figure 22 on page 46).

Figure 22: LEDs on the Management Port on EX4000 Switches

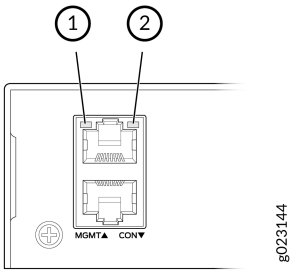

1– Link activity LED	2– Status LED

Table 31 on page 46 describes the LEDs.

Table 31: LEDs on the Management Port on EX4000 Switches

LED	Color	State and Description
Link activity	Green	• On steadily—The port and the link are active, but no link activity is occurring. • Blinking—The port and the link are active, and link activity is occurring. • Off—The port is not active.
Status	Green	Indicates the speed: • On steadily—Link speed is 1000 Mbps. • Blinking—Link speed is 100 Mbps. • Off—Link speed is 10 Mbps.

LEDs on the RJ-45 Network Ports, Virtual Chassis Ports/Uplink Ports on EX4000 Switches

IN THIS SECTION

- LEDs on the Network Ports | 47
- LEDs on the SFP+ Virtual Chassis/uplink ports | 48

The RJ-45 network ports, and SFP+ uplink ports/Virtual Chassis ports on EX4000 switches have LEDs that show the link activity and port status.

LEDs on the Network Ports

The figures in this section show and describe the LEDs on the following ports:

- Figure 23 on page 47 shows the LEDs on the RJ-45 network ports on EX4000 switches. Table 32 on page 48 details the Link Activity LED and Link Status LED descriptions on the 100-Mbps/1-Gbps/2.5-Gbps network/downlink ports.

Figure 23: LEDs on the RJ-45 Network Ports on EX4000 Switches

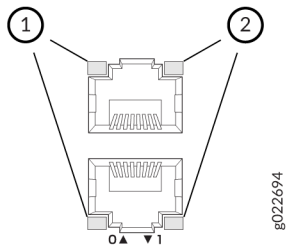

1– Link activity LED	2– Status LED

Table 32: Link Activity LED and Link Status LED Descriptions on the 10 Mbps/100 Mbps/1 Gbps/2.5 Gbps Network/Downlink Ports

LED	Color	State and Description
Link activity	Green	• On steadily—The port and the link are active, but no link activity is occurring. • Blinking—The port and the link are active, and link activity is occurring. • Off—The port is not active.

Status	Green or Amber	• LED in SPD Mode:
		  • Off—10 Mbps.
		  NOTE: 10 Mbps speed is not supported on multirate (2.5 Gbps) ports.
		  • Blinking Green—100 Mbps
		  • Solid Green—1000 Mbps
		  • Solid Amber—2.5 Gbps

LEDs on the SFP+ Virtual Chassis/uplink ports

The figures in this section show and describe the LEDs on the following ports:

- Figure 24 on page 49 hows the LEDs on the SFP+ Virtual Chassis/uplink ports on EX4000-8P.

  Table 33 on page 50 details the Link Activity LED and Link Status LED descriptions on the 1-Gbps/10-Gbps Virtual Chassis/uplink ports ports.

- Figure 25 on page 49 shows the LEDs on the SFP+ Virtual Chassis/uplink ports on EX4000-12T, EX4000-12P, and EX4000-12MP.

  Table 33 on page 50 details the Link Activity LED and Link Status LED descriptions on the 1-Gbps/10-Gbps Virtual Chassis/uplink ports ports.

- Figure 26 on page 50 shows the LEDs on the SFP+ Virtual Chassis/uplink ports on EX4000-24P, EX4000-24T, EX4000-48P, EX4000-48T, EX4000-24MP, and EX4000-48MP switches.

  Table 33 on page 50 details the Link Activity LED and Link Status LED descriptions on the 1-Gbps/10-Gbps Virtual Chassis/uplink ports ports.

Figure 24: LEDs on the SFP+ Virtual Chassis/uplink ports on EX4000-8P

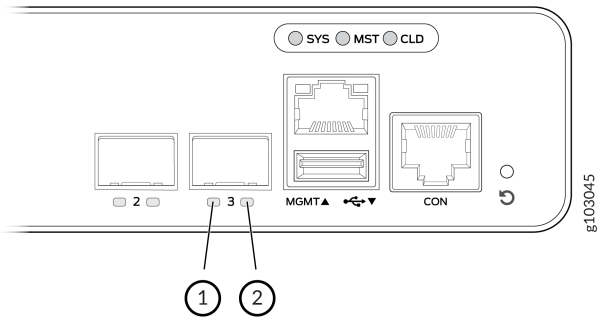

Figure 25: LEDs on the SFP+ Virtual Chassis/uplink ports on EX4000-12T, EX4000-12P, and EX4000-12MP

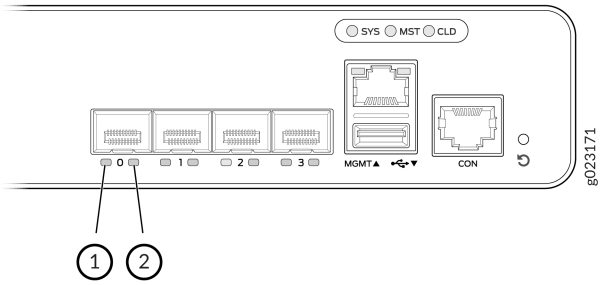

Figure 26: LEDs on the SFP+ Virtual Chassis/uplink ports on EX4000-24P, EX4000-24T, EX4000-48P, EX4000-48T, EX4000-24MP and EX4000-48MP Switches

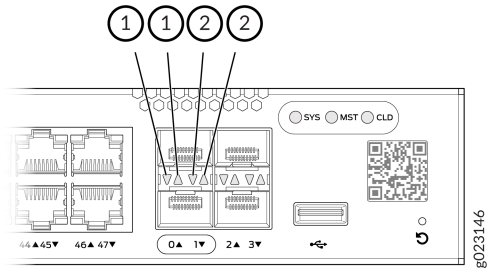

1– Link activity LED	2– Status LED

Table 33: Link Activity LED and Link Status LED Descriptions on the 1 Gbps/10 Gbps Virtual Chassis/ Uplink Ports

LED	Color	State and Description
Link activity	Green	• On steadily—The port and the link are active, but no link activity is occurring. • Blinking—The port and the link are active, and link activity is occurring. • Off—The port is not active.
Status	Green	• On steadily—10 Gbps speed. • Blinking—1 Gbps speed. • Off—The port is not active

Cooling System and Airflow in an EX4000 Switch

IN THIS SECTION

- EX4000 Switches with Front-to-Back Airflow | 51
- How to Position the Switch | 57

EX4000-8P, EX4000-12T, EX4000-12P, and EX4000-12MP switches have fanless convection cooling. EX4000-24P and EX4000-24MP have 2 fixed inbuilt fans each. EX4000-48P and EX4000-48MP have 3 fixed inbuilt fans each. EX4000-24T and EX4000-48T have 1 fixed inbuilt fan each. The airflow direction of the fans is front-to-back.

EX4000 Switches with Front-to-Back Airflow

In EX4000 switch models with front-to-back airflow, air enters through vents on the front panel to cool the chassis. The hot air then exits through the vents on the rear panel.

NOTE: The front side of a switch is the side where the ports are located. The rear side is where the fans are located.

Figure 27: Front-to-Back Airflow Through the EX4000-24P Switch Chassis

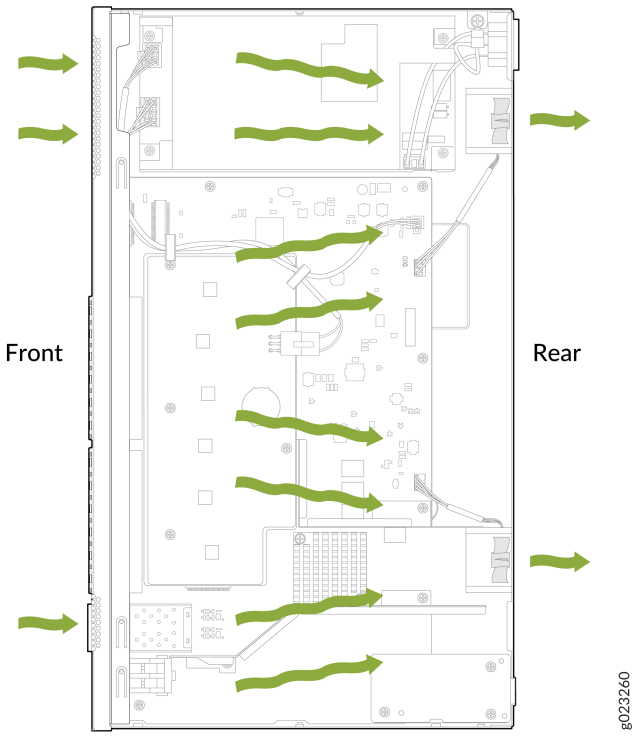

Figure 28: Front-to-Back Airflow Through the EX4000-24T Switch Chassis



Figure 29: Front-to-Back Airflow Through the EX4000-24MP Switch Chassis

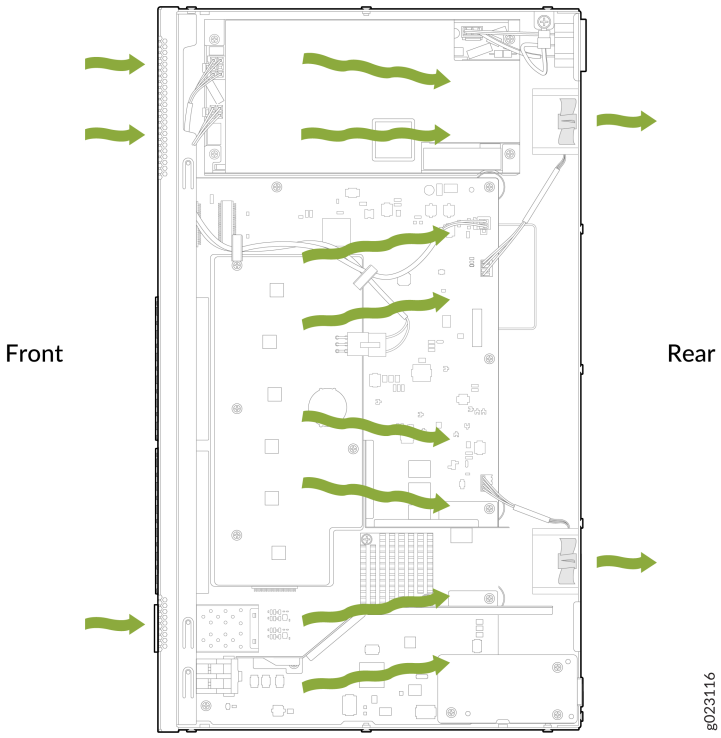

Figure 30: Front-to-Back Airflow Through the EX4000-48P Switch Chassis

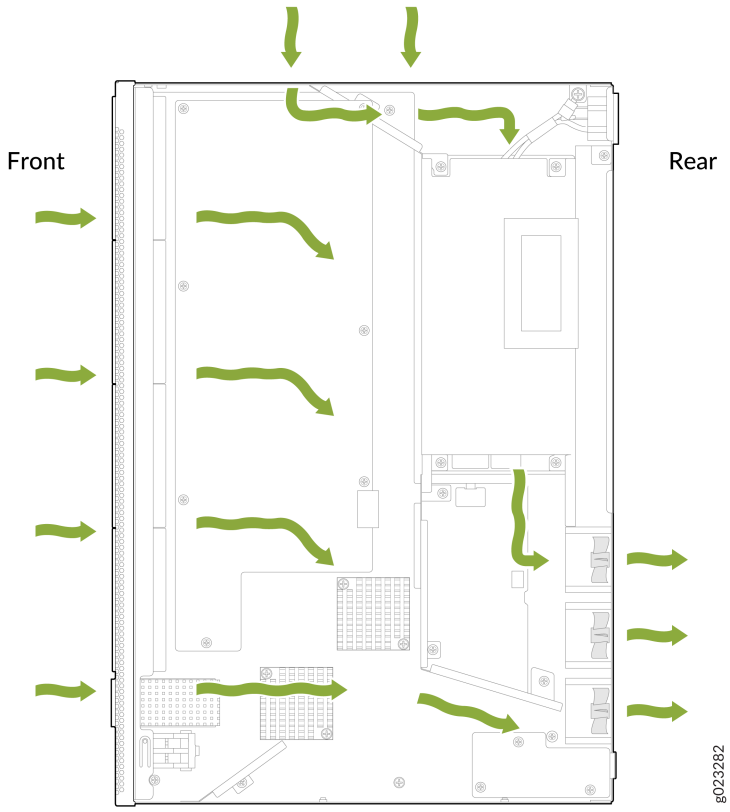

Figure 31: Front-to-Back Airflow Through the EX4000-48T Switch Chassis

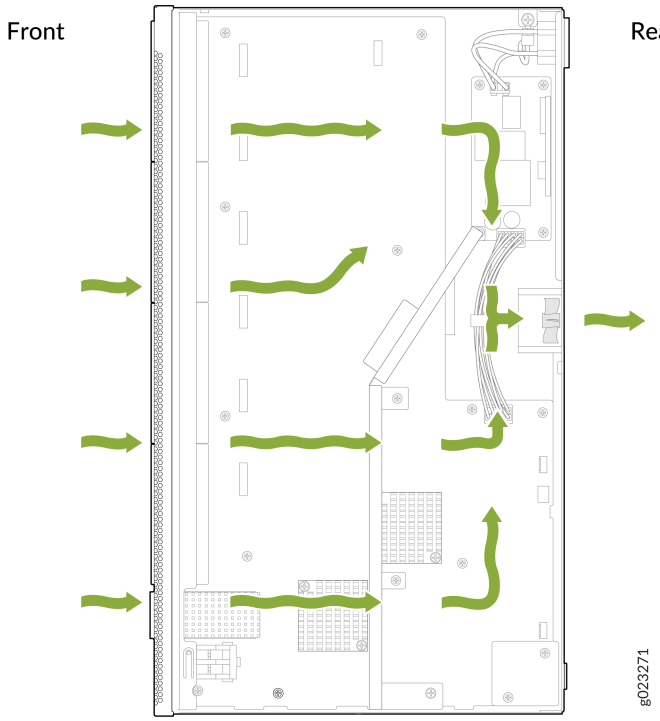

Figure 32: Front-to-Back Airflow Through the EX4000-48MP Switch Chassis

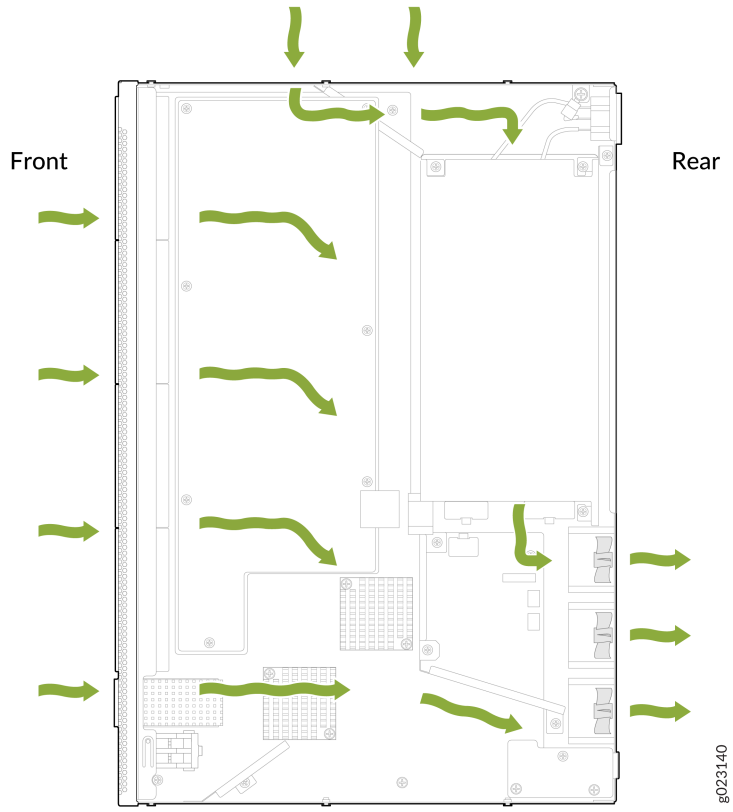

How to Position the Switch

Position the switch with front-to-back airflow in such a manner that the air flow out direction of the fans is directed to the hot aisle.

Figure 33: Deployment of Switches with Front-to-Back Airflow Through the Switch Chassis

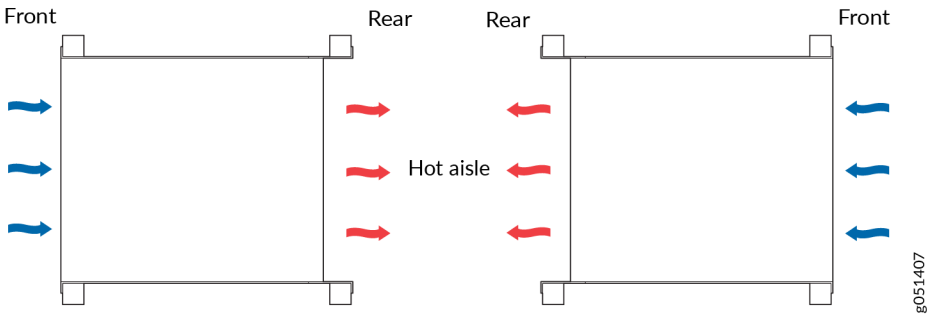

EX4000 Power System

IN THIS SECTION

- Power Supply in EX4000 Switches | **58**

This topic describes the power system of EX4000 switches

Power Supply in EX4000 Switches

IN THIS SECTION

- Power Supply Input Electrical Specifications | **59**
- PoE Budget Planning | **59**
- Specifications of the Power Cord for AC Power Supplies for EX4000 Switches | **60**

Juniper Networks ships EX4000 switches with inbuilt fixed power supplies. You power the switches by connecting the switches to an AC power source.

Power Supply Input Electrical Specifications

Table 34 on page 59 summarizes the electrical specifications of the EX4000 switches.

Table 34: Power Supply Input Electrical Specifications of the EX4000 Switches

Switch model	Electrical specifications
EX4000-8P	Input: 100-240 VAC, 3.0 A, 50-60 Hz
EX4000-12T	Input: 100-240 VAC, 0.9 A, 50-60 Hz
EX4000-12P	Input: 100-240 VAC, 4 A, 50-60 Hz
EX4000-12MP	Input: 100-240 VAC, 4.0 A, 50-60 Hz
EX4000-24P	Input: 100-240 VAC, 8.5 A, 50-60 Hz
EX4000-24T	Input: 100-240 VAC, 1.5 A, 50-60 Hz
EX4000-24MP	Input: 100–240 VAC, 8.6 A max, 50-60 Hz
EX4000-48P	Input: 100-127 VAC, 12 A, 50-60 Hz Input: 200-240 VAC, 7.5A, 50-60 Hz
EX4000-48T	Input: 100-127 VAC, 1.5 A, 50-60 Hz
EX4000-48MP	Input: 100-127 VAC, 12 A, 50-60 Hz/200-240 VAC, 7.5 A, 50-60 Hz

PoE Budget Planning

Table 35 on page 60 shows the PoE budget planning details of the EX4000 switch models.

Table 35: PoE Budget Planning Details of EX4000 Switch Models

Model	System Budget	PoE Budget	Total Budget
8P	30.96 W	120 W	150.96 W
12P	35.94 W	240 W	275.94 W
12MP	41.82 W	240 W	281.82 W
24P	45.44 W	370 W	415.44 W
24MP	59.24 W	480 W	539.24 W
48P	75.05 W	740 W	815.05 W
48MP	95.55 W	960 W	1055.55 W

Specifications of the Power Cord for AC Power Supplies for EX4000 Switches

A detachable AC power cord is supplied with the AC power supplies. The coupler is type C13 as described by International Electrotechnical Commission (IEC) standard 60320. The plug end of the power cord fits into the power source outlet that is standard for your geographical location.

CAUTION: The AC power cord provided with each power supply is intended for use with that power supply only and not for any other use.

NOTE: In North America, AC power cords must not exceed 4.5 meters (approximately 14.75 feet) in length, to comply with National Electrical Code (NEC) Sections 400-8 (NFPA 75, 5-2.2) and 210-52 and with Canadian Electrical Code (CEC) Section 4-010(3). The cords supplied with the switch are in compliance.

Table 36 on page 61 gives the AC power cord specifications for the countries and regions listed in the table.

Table 36: AC Power Cord Specifications

Country or Region	Electrical Specifications	Plug Standards	Juniper Model Number
Argentina	250 VAC, 10 A, 50 Hz	IRAM 2073 Type RA/3	CBL-EX-PWR-C13-AR
Australia	250 VAC, 10 A, 50 Hz	AS/NZZS 3112 Type SAA/3	CBL-EX-PWR-C13-AU
Brazil	250 VAC, 10 A, 50 Hz	NBR 14136 Type BR/3	CBL-EX-PWR-C13-BR
China	250 VAC, 10 A, 50 Hz	GB 1002-1996 Type PRC/3	CBL-EX-PWR-C13-CH
Europe (except Italy, Switzerland, and the United Kingdom)	250 VAC, 10 A, 50 Hz	CEE (7) VII Type VIIG	CBL-EX-PWR-C13-EU
India	250 VAC, 10 A, 50 Hz	IS 1293 Type IND/3	CBL-EX-PWR-C13-IN
Israel	250 VAC, 10 A, 50 Hz	SI 32/1971 Type IL/3G	CBL-EX-PWR-C13-IL
Italy	250 VAC, 10 A, 50 Hz	CEI 23-16 Type I/3G	CBL-EX-PWR-C13-IT
Japan	125 VAC, 12 A, 50 Hz or 60 Hz	JIS 8303	CBL-EX-PWR-C13-JP
Korea	250 VAC, 10 A, 50 Hz or 60 Hz	CEE (7) VII Type VIIGK	CBL-EX-PWR-C13-KR
North America*	125 VAC, 13 A, 60 Hz	NEMA 5-15 Type N5-15	CBL-EX-PWR-C13-US
	125 VAC, 15 A, 60 Hz	NEMA 5-15 Type N5-15	CBL-PWR-C13-US-48P
South Africa	250 VAC, 10 A, 50 Hz	SABS 164/1:1992 Type ZA/13	CBL-EX-PWR-C13-SA

Table 36: AC Power Cord Specifications *(Continued)*

Country or Region	Electrical Specifications	Plug Standards	Juniper Model Number
Switzerland	250 VAC, 10 A, 50 Hz	SEV 6534-2 Type 12G	CBL-EX-PWR-C13-SZ
United Kingdom	250 VAC, 10 A, 50 Hz	BS 1363/A Type BS89/13	CBL-EX-PWR-C13-UK

Figure 34 on page 62 illustrates the plug on the power cord for some of the countries or regions listed in Table 36 on page 61.

Figure 34: AC Plug Types

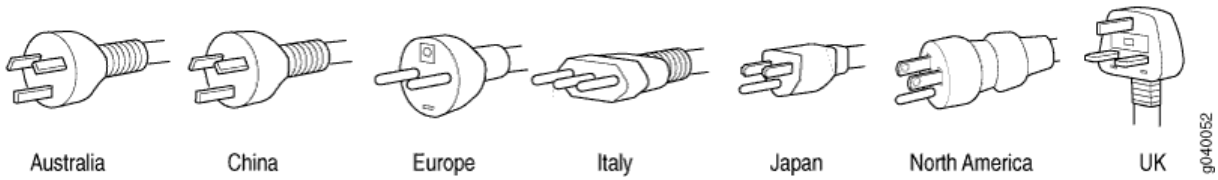

CAUTION: Do not use the AC power cord with any other product other than EX4000.

CAUTION: Power cords must not block access to switch components.

Table 37 on page 62 shows the specifications of the power cords used to connect EX4000 switches to C13 Power Strips.

Table 37: Specifications of Power Cords Used to Connect EX4000 Switches to C13 C14 Power Strips

Country/Region	Electrical Specifications	Juniper Model Number
USA, China, Japan, Europe, South Korea, Australia	250 VAC, 10 A, 50 Hz	CBL-EX-PWR-C13-C14

CHAPTER 3

Site Planning and Preparation

IN THIS CHAPTER

- Site Preparation Checklist for EX4000 Switches | **64**
- EX4000 Site Guidelines and Requirements | **65**

Site Preparation Checklist for EX4000 Switches

The following checklist summarizes the tasks you need to perform when preparing a site for EX4000 switch installation.

Table 38: Site Preparation Checklist

Item or Task	For More Information	Performed By	Date
Environment			
Verify that environmental factors such as temperature and humidity are within switch tolerances.	"Environmental Requirements and Specifications for EX4000 Switches" on page 66		
Power			
Measure the distance between external power sources and the switch installation site.	"Clearance Requirements for Airflow and Hardware Maintenance for EX4000 Switches" on page 73		
Hardware Configuration			
Choose the number and types of switches you want to install.	"EX4000 System Overview" on page 12		
Rack or Cabinet			
Verify that the rack or cabinet meets the minimum requirements for installing the switch.	• "Rack Requirements" on page 69 • "Cabinet Requirements for EX4000 Switches" on page 71		
Plan rack or cabinet location, including required space clearances.			

Table 38: Site Preparation Checklist *(Continued)*

Item or Task	For More Information	Performed By	Date
Secure the rack or cabinet to the floor and building structure.			
Cables			
Acquire cables and connectors: • Determine the number of cables needed based on your planned configuration. • Review the maximum distance allowed for each cable. Choose the length of the cable based on the distance between the hardware components being connected.			
Plan the cable routing and management.			
Verify appropriate clearance exists in your selected location.	"Clearance Requirements for Airflow and Hardware Maintenance for EX4000 Switches" on page 73.		

EX4000 Site Guidelines and Requirements

IN THIS SECTION

- Environmental Requirements and Specifications for EX4000 Switches | **66**
- General Site Guidelines | **68**
- Site Electrical Wiring Guidelines | **68**

Rack Requirements | 69
Cabinet Requirements for EX4000 Switches | 71
Clearance Requirements for Airflow and Hardware Maintenance for EX4000 Switches | 73

Environmental Requirements and Specifications for EX4000 Switches

You must install the switch in a rack or cabinet. You must house it in a dry, clean, well-ventilated, and temperature-controlled environment.

Follow these environmental guidelines:

- Ensure that the site is as dust-free as possible. Dust can clog air intake vents and filters, reducing the efficiency of the switch cooling system.
- Maintain ambient airflow for normal switch operation. If the airflow is blocked or restricted, or if the intake air is too warm, the switch might overheat. If the switch overheats, the switch temperature monitor may shut down the device to protect the hardware components.

The following are the required environmental conditions for normal switch operation of EX4000 switches.

- Operating Temperature (EX4000-8P, EX4000-12T, EX4000-24P, EX4000-24T, EX4000-24MP, EX4000-48P, EX4000-48T, and EX4000-48MP)
  - Sea Level: 0 to 50 °C
  - Up to 5000 ft (1500 m): 0 to 45 °C
  - Up to 10000 ft (3000 m): 0 to 40 °C
- Operating Temperature (EX4000-12P and EX4000-12MP)
  - Sea Level: 0 to 45 °C
  - Up to 5000 ft (1500 m): 0 to 40 °C
  - Up to 10000 ft (3000 m): 0 to 35 °C
- Operating Altitude
  - 10000 ft (3,000 m)

- Operating relative humidity
  - 5% to 90% at 40 °C (non-condensing)
- Storage temperature
  - 25 to 70 °C (-13 °F to 158 °F)
- Storage Altitude
  - 15,000 ft (4500 m)
- Storage relative humidity
  - 5% to 95% at 65 °C (non-condensing)
- Seismic tolerance: Tested for Zone 4 earthquake safety.

NOTE: For EX4000-8P, EX4000-12P, and EX4000-12MP maximum operating temperature is limited to 40° C and 45° C, Sea Level respectively for Under the Desk mounting. For rack mounting of fanless switches (EX4000-8P, EX4000-12P , EX4000-12T, and EX4000-12MP), 2RU clearance is required above the unit.

NOTE: Industrial grade SFP+ optics (1GE/10GE) is required for all fanless switches (EX4000-8P, EX4000-12P , EX4000-12T, and EX4000-12MP) above 35 °C (for Under the Desk mounting) and 40 °C (for all other mounting orientations) operating ambient temperature.

NOTE: Install the EX4000 switch only in restricted areas, such as dedicated equipment rooms and equipment closets. Install the switch in accordance with Articles of the National Electrical Code, ANSI/NFPA 70.

NOTE: For EX4000-12MP, maximum operating temperature is limited to 40 °C, sea level for Under the Desk mounting. For rack mounting of EX4000-12MP, 2RU clearance is required above the unit.

Industrial grade SFP+ optics (1GE/10GE) is required for EX4000-12MP above 35 °C (for Under the Desk) and 40 °C (for all other mounting orientations) operating ambient temperature.

General Site Guidelines

Efficient device operation requires proper site planning. For the device to operate properly, you must ensure maintenance and proper layout of the equipment, rack or cabinet, and wiring closet.

To plan and create an acceptable operating environment for your device and prevent environmentally caused equipment failures:

- Keep the area around the chassis free from dust and conductive material, such as metal flakes.
- Follow the prescribed airflow guidelines to ensure that the cooling system functions properly. Ensure that the exhaust from other equipment does not blow into the intake vents of the device.
- Follow the prescribed electrostatic discharge (ESD) prevention procedures to prevent damaging the equipment. Static discharge can cause components to fail completely or intermittently over time.
- Install the device in a secure area, so that only authorized personnel can access the device.

Site Electrical Wiring Guidelines

Table 39 on page 69 describes the factors you must consider while planning the electrical wiring at your site.



WARNING: You must provide a properly grounded and shielded environment and use electrical surge-suppression devices.

Avertissement Vous devez établir un environnement protégé et convenablement mis à la terre et utiliser des dispositifs de parasurtension.

Table 39: Site Electrical Wiring Guidelines

Site Wiring Factor	Guidelines
Signaling limitations	If your site experiences any of the following problems, consult experts in electrical surge suppression and shielding: • Radio frequency interference (RFI) because of improperly installed wires • Damage from lightning strikes occurring when wires exceed recommended distances or pass between buildings • Damage to unshielded conductors and electronic devices as a result of electromagnetic pulses (EMPs) caused by lightning
Radio frequency interference	To reduce or eliminate RFI from your site wiring, do the following: • Use a twisted-pair cable with a good distribution of grounding conductors. • If you need to exceed the recommended distances, use a high-quality twisted-pair cable with one ground conductor for each data signal, when applicable.
Electromagnetic compatibility	If your site is susceptible to problems with electromagnetic compatibility (EMC), particularly from lightning or radio transmitters, seek expert advice. Strong sources of electromagnetic interference (EMI) can cause: • Destruction of the signal drivers and receivers in the device. • Electrical hazards as a result of power surges conducted over the lines into the equipment.

Rack Requirements

You can mount the device on two-post racks or four-post racks.

Rack Requirement	Guidelines
Rack type	A U is the standard rack unit defined by the Electronic Components Industry Association (ECIA) (http://www.ecianow.org). You can mount the device on a rack that provides bracket holes or hole patterns spaced at 1U (1.75 in. or 4.45 cm) increments and meets the size and strength requirements to support the weight.
Mounting bracket hole spacing	The holes in the mounting brackets are spaced at 1U (1.75 in. or 4.45 cm) so that the device can be mounted in any rack that provides holes spaced at that distance.
Rack size and strength	Ensure that the: • Rack complies with the size and strength standards of a 19-in. rack as defined by the ECIA (http://www.ecianow.org). • Rack rails are spaced widely enough to accommodate the external dimensions of the device chassis. Also ensure that the outer edges of the front mounting brackets extend the width of the chassis to 19 in. (48.2 cm). • Rack is strong enough to support the weight of the device. • Spacing of rails and adjacent racks provides for proper clearance around the device and rack. • The 8 and 12 port device can be mounted on a 2 post rack by using 2-post RMK • The 24 and 48 port device can be mounted on a 2 post rack using 2-post RMK or on a 4-post rack using 4-post RMK. For 4-post Installations: • If you are mounting a device/switch flush with the front posts of a rack, ensure the minimum distance between front and rear post shall be 24.0 in. (60.96 cm) and extendable upto 31.5 in. (80.00 cm). • If you are mounting a switch in a recessed position (using the EX-4PST-RMK) from the front posts of a rack, ensure the minimum distance between front and rear post shall be 26.0 in. (66.04cm) and extendable upto 31.5 in. (80.00 cm).

(Continued)

Rack Requirement	Guidelines
Rack connection to building structure	• Secure the rack to the building structure. • If your geographical area is earthquake-prone, secure the rack to the floor. • Secure the rack to the ceiling brackets as well as wall or floor brackets for maximum stability.

Cabinet Requirements for EX4000 Switches

You can mount the device in a cabinet that contains a 19-in. rack.

Table 40 on page 71 describes the cabinet requirements and specifications.

Table 40: Cabinet Requirements and Specifications

Cabinet Requirement	Guidelines
Cabinet size	• The minimum cabinet depth must be able to accommodate the maximum external dimensions of the switch/ device and also allow front and rear thermal clearances as provided in the clearance section. See "Clearance Requirements for Airflow and Hardware Maintenance for EX4000 Switches" on page 73.

Table 40: Cabinet Requirements and Specifications *(Continued)*

Cabinet Requirement	Guidelines

Cabinet clearance	• The outer edges of the front mounting brackets extend the width of the chassis to 19 in. (48.2 cm).
	• The 8 and 12 port device can be mounted on the front posts of a rack inside a cabinet by using 2-post RMK.
	• The 24 and 48 port devices can be mounted on the front posts of a rack inside a cabinet by using the 2-post RMK or on a 4-post rack inside the cabinet using 4-post RMK.
	• For 4-post Installations:
	  • If you are mounting a device/switch flush with the front posts of a rack inside the cabinet, ensure the minimum distance between front and rear post shall be 24.0 in. (60.96 cm) and extendable upto 31.50 in (80.0 cm).
	  • If you are mounting a switch in a recessed position (using the EX-4PST-RMK) from the front posts of a rack, ensure the minimum distance between front and rear post shall be 26.0 in. (66.04cm) and extendable upto 31.5 in. (80.00 cm).

Table 40: Cabinet Requirements and Specifications *(Continued)*

Cabinet Requirement	Guidelines
Cabinet airflow requirements	When you mount the device in a cabinet, ensure that ventilation through the cabinet is sufficient to prevent overheating, as follows: • Ensure adequate cool air supply to dissipate the thermal output of the device or devices. • Ensure that the hot air exhaust of the chassis exits the cabinet without recirculating into the device. An open cabinet (without a top or doors) that employs hot air exhaust extraction from the top ensures the best airflow through the chassis. If the cabinet contains a top or doors, perforations in these elements assist with removing the hot air exhaust. • Install the device in the cabinet in a way that maximizes the open space on the side of the chassis that has the hot air exhaust. • Route and secure all cables to minimize the blockage of airflow to and from the chassis. • Ensure that the spacing of rails and adjacent cabinets is such that proper clearance exists around the device and cabinet. • A cabinet larger than the minimum required provides better airflow and reduces the chance of overheating.

Clearance Requirements for Airflow and Hardware Maintenance for EX4000 Switches

When planning the site for installing an EX4000 switch, you must allow sufficient clearance around the installed switch.

See:

- Figure 35 on page 74 for clearance requirements for airflow and hardware maintenance for EX4000-8P and EX4000-12T switches.
- Figure 36 on page 75 for clearance requirements for airflow and hardware maintenance for EX4000-12P and EX4000-12MP switches.
- Figure 37 on page 76 for clearance requirements for airflow and hardware maintenance for EX4000-24P, EX4000-24MP, and EX4000-48T switches.
- Figure 38 on page 77 for clearance requirements for airflow and hardware maintenance for EX4000-24T switches.
- Figure 39 on page 78 for clearance requirements for airflow and hardware maintenance for EX4000-48P and EX4000-48MP switches.

Figure 35: Clearance Requirements for Airflow and Hardware Maintenance for the EX4000-8P and EX4000-12T Switch

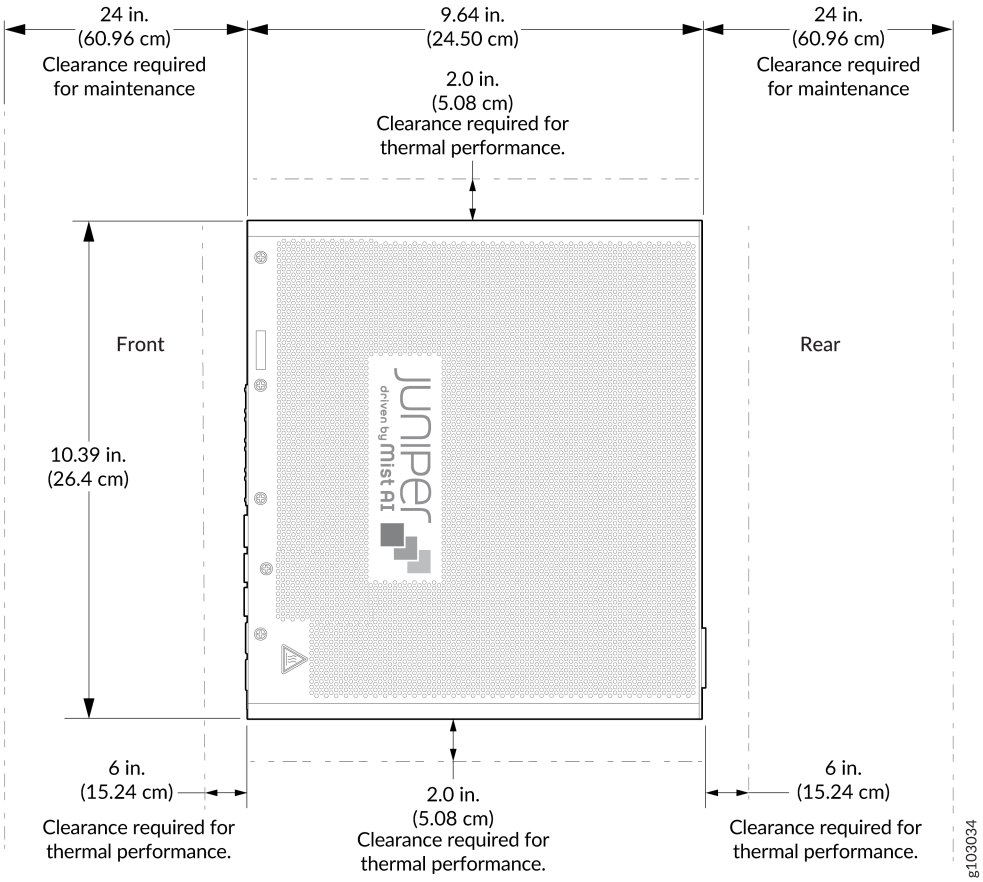

NOTE: Do not block the vents on the top cover of the switches in any of the mounting conditions to prevent overheating of the switch chassis. Ensure 2 rack unit clearance on the top side for airflow/cooling.

Figure 36: Clearance Requirements for Airflow and Hardware Maintenance for the EX4000-12P and EX4000-12MP Switch

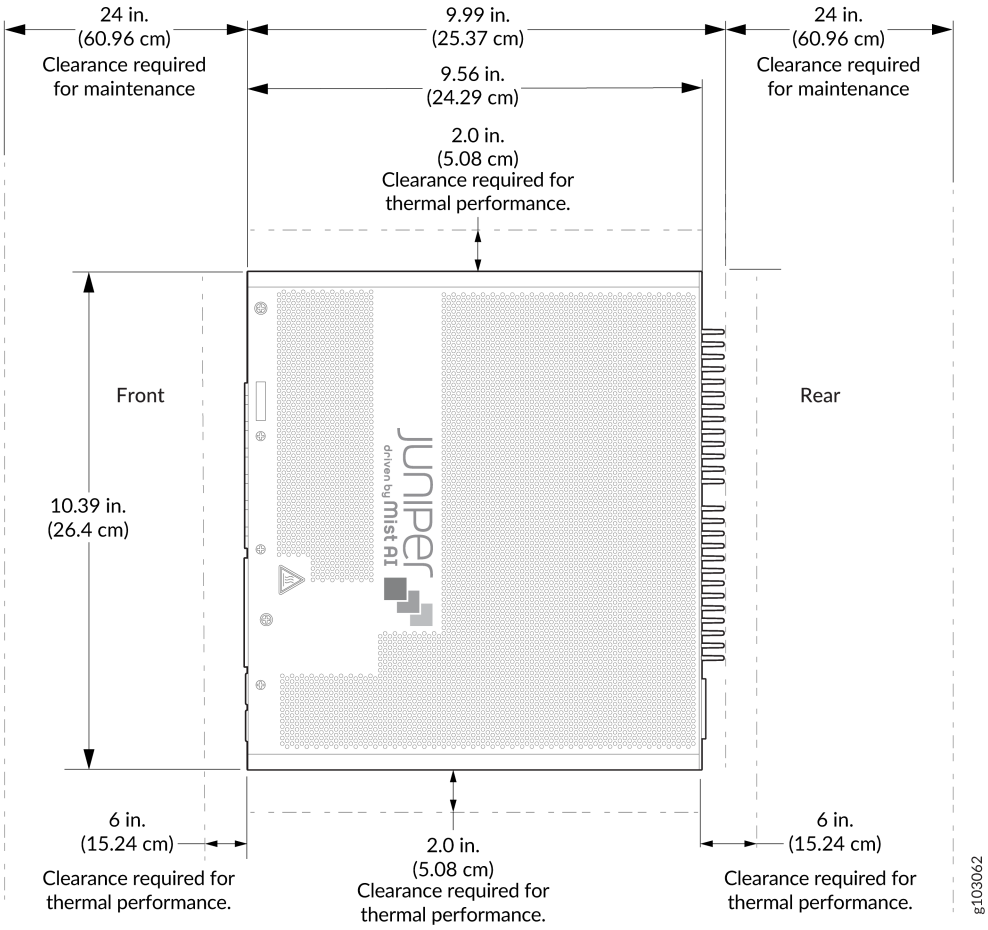

NOTE: Do not block the vents on the top cover of the 12 port switches in any of the mounting conditions to prevent overheating of the switch chassis. Ensure 2 rack unit clearance on the top side for airflow/cooling.

Figure 37: Clearance Requirements for Airflow and Hardware Maintenance for the EX4000-24P, EX4000-24MP, and EX4000-48T Switch

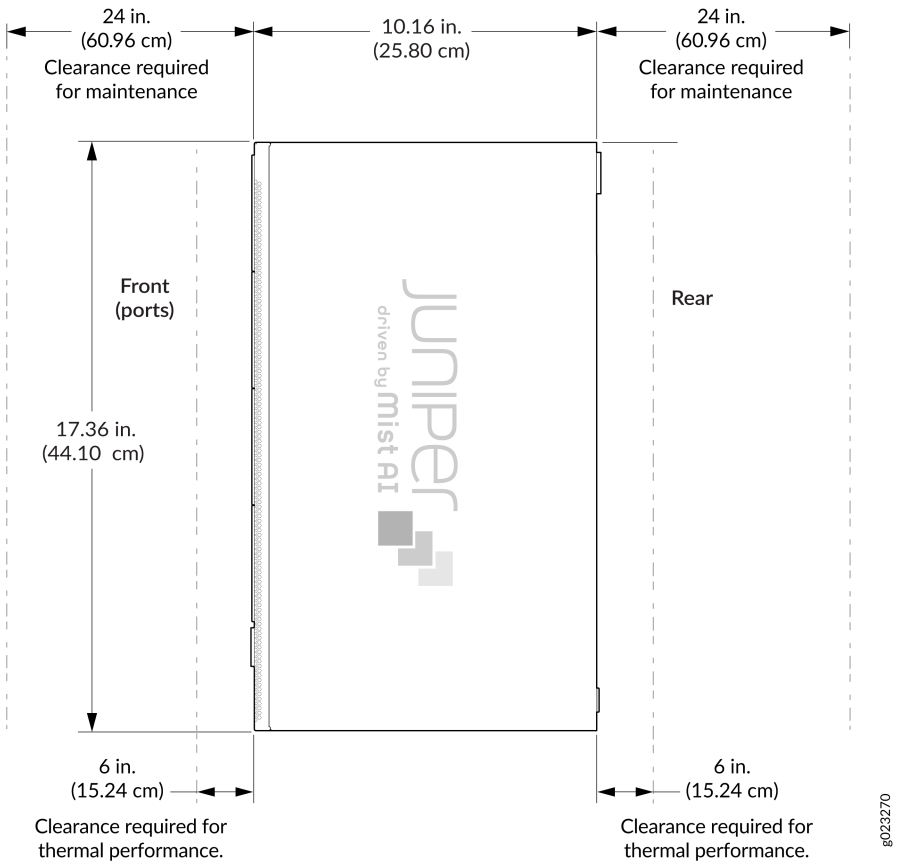

Figure 38: Clearance Requirements for Airflow and Hardware Maintenance for the EX4000-24T Switch

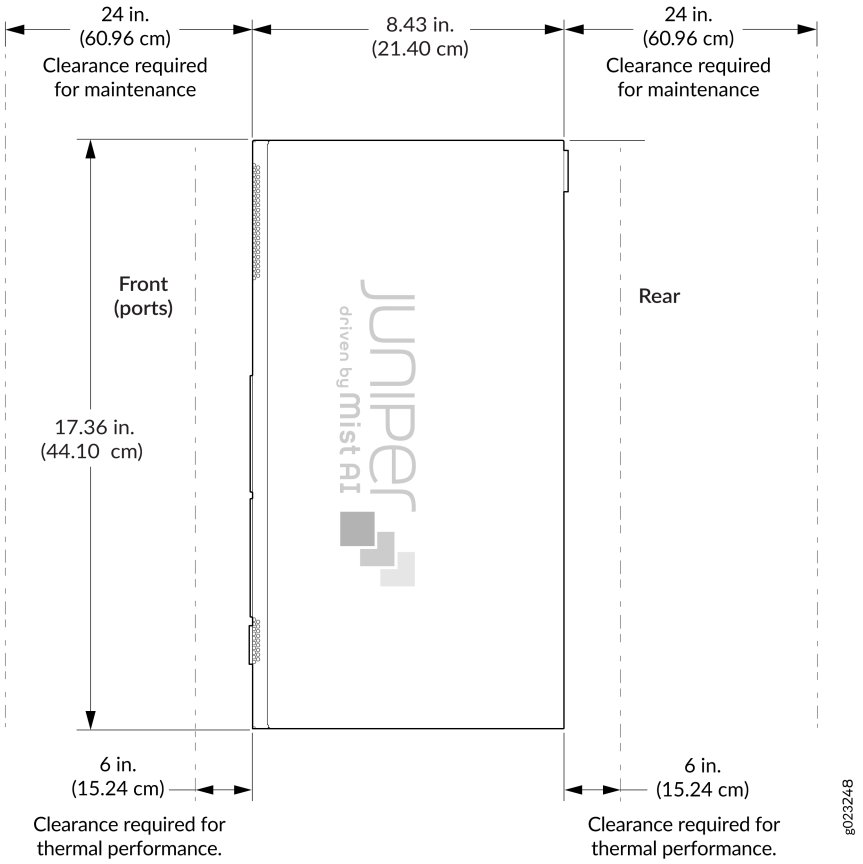

Figure 39: Clearance Requirements for Airflow and Hardware Maintenance for the EX4000-48P and EX4000-48MP Switch

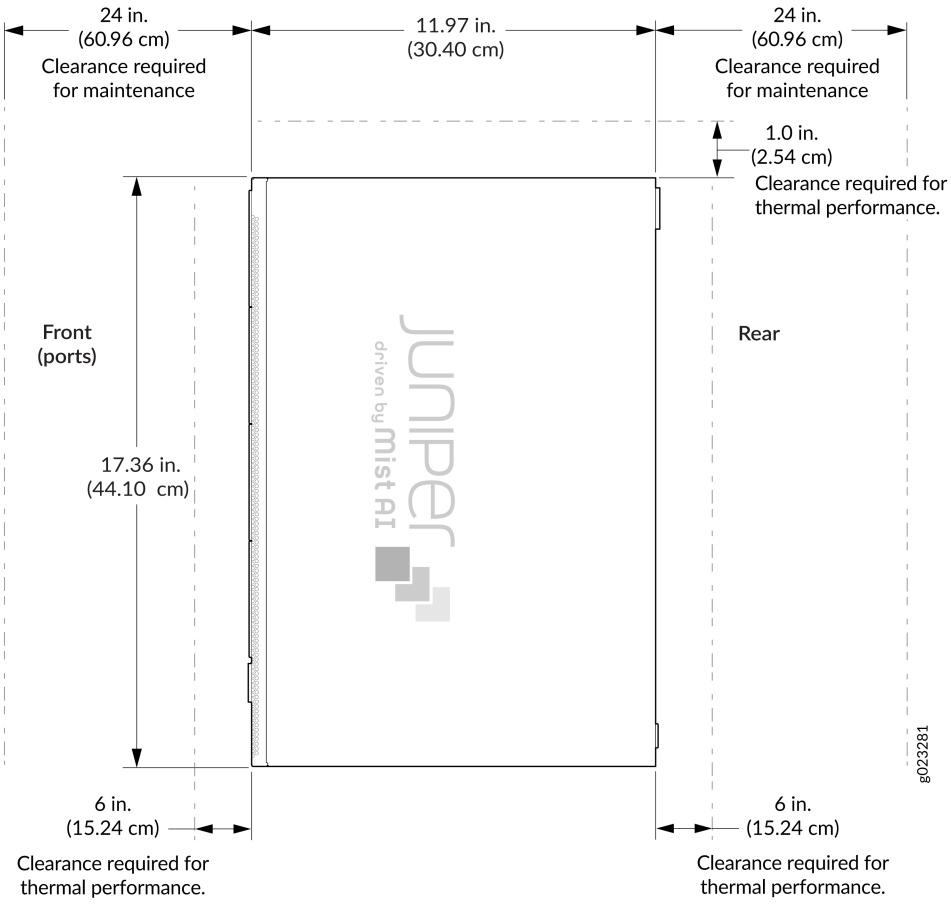

- For the cooling system to function properly, the airflow around the chassis must be unrestricted.
- If you are mounting the switch in a rack or cabinet with other equipment, or if you are placing it on the desktop or floor near other equipment, ensure that the exhaust from other equipment does not blow into the intake vents of the chassis.
- Leave at least 24 in. (61 cm) in front of the switch and behind the switch for service personnel to remove and install hardware components. It is recommended that you allow at least 24 in. (60.96 cm) in front of the rack or cabinet and 24 in. (61 cm) behind the rack or cabinet.

4

CHAPTER

Installation and Configuration

IN THIS CHAPTER

- Install the EX4000 Switch | **80**
- Connect the EX4000 to Power | **123**
- Managing EX4000 Switches Using Juniper Mist™ | **132**
- Register Products—Mandatory to Validate SLAs | **137**
- Configure Junos OS on an EX4000 Switch | **137**

Install the EX4000 Switch

SUMMARY

This topic guides you through the steps to install EX4000 switches.

IN THIS SECTION

- Unpack the EX4000 Switch | **81**
- Packing List for an EX4000 Switch | **82**
- Update Base Installation Data | **83**
- Mount an EX4000 Switch on Two Posts in a Rack or Cabinet (EX4000-8P, EX4000-12T, EX4000-12P, EX4000-12MP, EX4000-24P, EX4000-24T, EX4000-24MP, EX4000-48P, EX4000-48T, and EX4000-48MP) | **84**
- Mount an EX4000 Switch on Four Posts in a Rack or Cabinet (EX4000-24P, EX4000-24T, EX4000-24MP, EX4000-48P, EX4000-48T, and EX4000-48MP) by using EX-4PST-RMK | **87**
- Mount an EX4000 Switch in a Recessed Position in a Rack or Cabinet (EX4000-24P, EX4000-24T, EX4000-24MP, EX4000-48P, EX4000-48T, and EX4000-48MP) by using EX-4PST-RMK | **91**
- Mount an EX4000 Switch in a Rack or Cabinet by Using the Enhanced 4-post JNP-4PST-RMK-1U-E Rack Mount Kit (EX4000-24P, EX4000-24T, EX4000-24MP, EX4000-48P, EX4000-48T, and EX4000-48MP) | **95**
- Mount an EX4000 Switch on a Wall (EX4000-8P, EX4000-12T, EX4000-12P, and EX4000-12MP) | **105**
- Mounting an EX4000 Switch on a Desk (EX4000-8P, EX4000-12T, EX4000-12P, and EX4000-12MP) | **110**
- Mounting an EX4000 Switch Under a Desk or Other Level Surface (EX4000-8P, EX4000-12T, EX4000-12P, and EX4000-12MP) | **111**

- Mounting an EX4000 Switch on a Ferrous Wall using Magnet Pads (EX4000-8P, EX4000-12T, EX4000-12P, and EX4000-12MP) | **113**
- Mounting an EX4000 Switch on a DIN Rail (EX4000-8P, EX4000-12T, EX4000-12P, and EX4000-12MP) | **116**
- Unmounting an EX4000 Switch From a DIN Rail (EX4000-8P, EX4000-12T, EX4000-12P, and EX4000-12MP) | **118**
- Attaching the Cable Guard to Protect Cable Connections (EX4000-8P, EX4000-12T, EX4000-12P, and EX4000-12MP) | **120**

Unpack the EX4000 Switch

Juniper Networks ships EX4000 switches in a cardboard carton, secured with foam packing material. The carton has an accessory compartment.

CAUTION: The shipping carton completely protects EX4000 switches. Leave the switches safely in the carton until you are ready to begin installation.

To unpack the switch:

1. Move the shipping carton to a staging area as close to the installation site as possible, but where you have enough room to remove the system components.
2. Position the carton so that the arrows are pointing up.
3. Open the top flaps on the shipping carton.
4. Pull out the packing material holding the switch in place.
5. Verify the parts received against the inventory on the label attached to the carton (see "Packing List for an EX4000 Switch" on page 82).
6. Save the shipping carton and packing materials in case you need to move or ship the switch later.

Packing List for an EX4000 Switch

The switch shipment includes a packing list. Check the parts you receive with the switch against the items on the packing list. The packing list specifies the part number and provides a description of each part in your order. The parts shipped match the switch model you ordered (see "EX4000 Models and Specifications" on page 18).

If any part on the packing list is missing, contact your customer service representative or contact Juniper customer care from within the U.S. or Canada by telephone at 1-888-314-5822. For international-dial or direct-dial options in countries without toll-free numbers, see https://www.juniper.net/support/requesting-support.html.

See:

- Table 41 on page 82 for inventory of components provided with EX4000-8P models.
- Table 42 on page 83 for inventory of components provided with EX4000-24P, EX4000-24T, EX4000-48P, EX4000-48T models.

Table 41: Inventory of Components Provided with the EX4000-8P, EX4000-12P, EX4000-12T, and EX4000-12MP models

Component	Quantity
Switch	1
PSU	In-built
AC power cord appropriate for your geographical location	1
Dust covers for SFP ports	2 preinstalled
Power cord retainer	1
Documentation Roadmap/End User License Agreement (EULA)/Warranty Card	1

Table 42: Inventory of Components Provided with the EX4000-24P, EX4000-24T, EX4000-24MP, EX4000-48P, EX4000-48T, and EX4000-48MP models

Component	Quantity
Switch	1
PSU	In-built
Fans	In-built
AC power cord appropriate for your geographical location	1
Dust covers for SFP ports	4 preinstalled
Mounting brackets (2-post)	1. Rubber feet is included.
Power cord retainer	1
Documentation Roadmap/End User License Agreement (EULA)/Warranty Card	1

Update Base Installation Data

CAUTION: Update the installation base data if any addition or change to the installation base occurs or if the installation base is moved. Juniper Networks is not responsible for not meeting the hardware replacement SLA for products that do not have accurate installation base data.

Update your installation base at https://supportportal.juniper.net/s/CreateCase .

Mount an EX4000 Switch on Two Posts in a Rack or Cabinet (EX4000-8P, EX4000-12T, EX4000-12P, EX4000-12MP, EX4000-24P, EX4000-24T, EX4000-24MP, EX4000-48P, EX4000-48T, and EX4000-48MP)

You use the 2-post mounting kit - EX-RMK (provided with the switch), to mount the EX4000-24P, EX4000-24T, EX4000-24MP, EX4000-48P, EX4000-48T, and EX4000-48MP switches on two posts of a rack because 2-post rack mounting is the default mounting option for these switches. Whereas, for EX4000-8P, EX4000-12P, EX4000-12T, and EX4000-12MP switches, you use the separately orderable 2-post mounting kit - EX4000-2PST-RMK to mount these switches on a rack, because desktop mounting is the default mounting option for these switches.

Before mounting the switch on two posts in a rack:

- Verify that the site meets the requirements described in "Environmental Requirements and Specifications for EX4000 Switches" on page 66.
- Place the rack in its permanent location, allowing adequate clearance for airflow and maintenance, and secure it to the building structure.
- Read General Safety Guidelines and Warnings, with particular attention to Chassis and Component Lifting Guidelines.

Ensure that you have the following parts and tools available:

- Phillips (+) screwdriver, number 2 (not provided).
- Screws to secure the chassis to the rack (not provided).

NOTE:

- Do not block the vents on the top cover of the 8 and 12 port switches in any of the mounting conditions to prevent overheating of the switch chassis.
- Ensure 2 rack unit clearance on the top side for airflow/cooling.

You can mount an EX4000 switch on two posts of a 19-in. rack or cabinet by using the front mounting brackets provided with the switch. (The remainder of this topic uses *rack* to mean *rack or cabinet*.

NOTE: One person must be available to lift the switch while another secures the switch to the rack.

CAUTION: If you are mounting multiple units on a rack, mount the heaviest unit at the bottom of the rack and mount the other units from the bottom of the rack to the top in decreasing order of the weight of the units.

To mount the switch on two posts in a rack:

1. Remove the switch from the shipping carton (see "Unpack the EX4000 Switch" on page 81).
2. Place the switch on a flat, stable surface.
3. Wrap and fasten one end of the ESD grounding strap around your bare wrist, and connect the other end to a site ESD point.
4. Attach the mounting brackets using the four M4 screws. Use Phillips(+) screwdriver, number 2. Apply 9.11 lb-In (pounds per inch) of torque to the screws.

Figure 40: Attach the mounting brackets to 8-port and 12-port switches

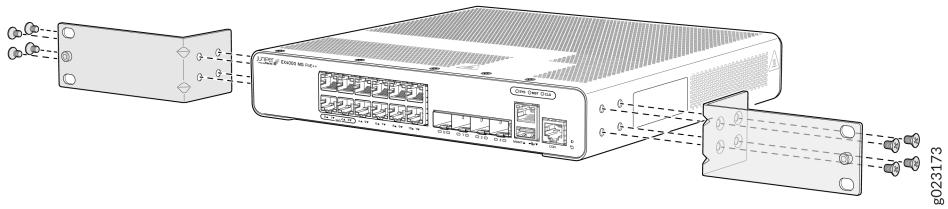

Figure 41: Attach the mounting brackets to the 24-port or 48-port EX4000 switches

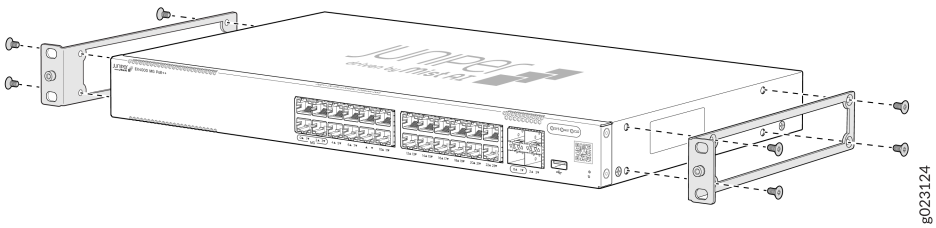

5. Lift the switch and position it in the rack. Because the fans are inbuilt with AFO (Air Flow Out) front-to-back direction, position the switch so that the rear of the switch is facing the hot aisle and the front of the switch is facing the cold aisle. Line up the bottom hole in each mounting bracket with a hole in each rack post, ensuring that the switch is level.

Figure 42: Position the switch in the rack - 8-port and 12-port switches

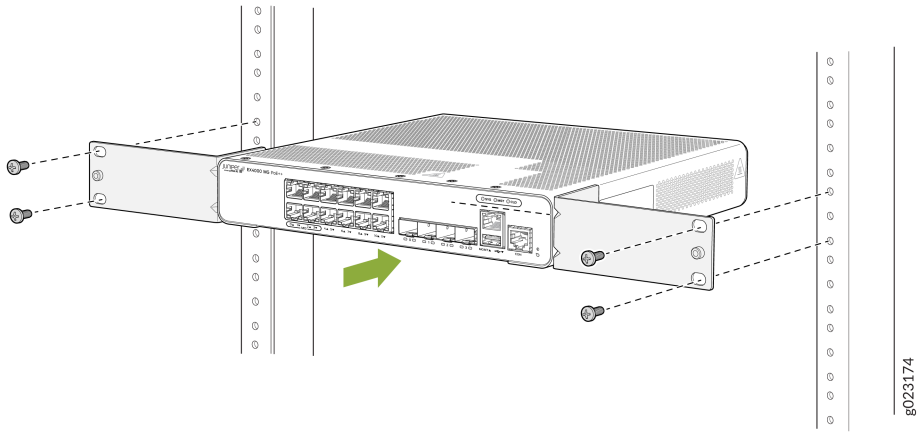

Figure 43: Position the switch in the rack - 24-port and 48-port switches

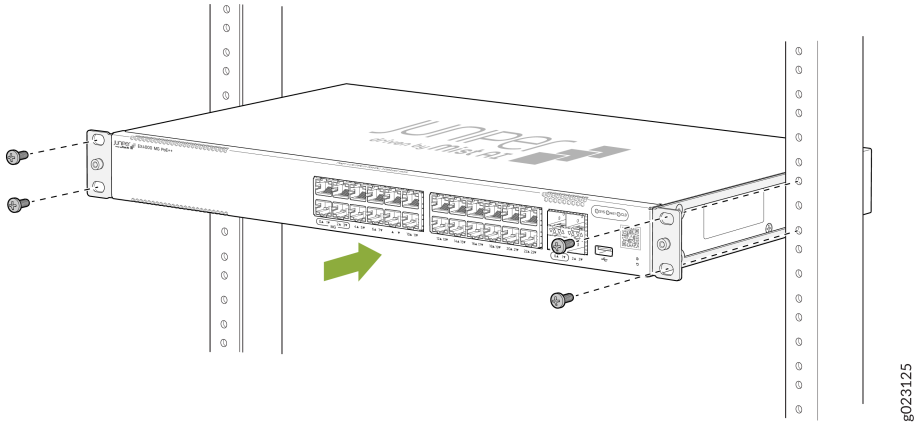

6. While you're holding the switch in place, have a second person insert and tighten the rack mount screws to secure the mounting brackets to the rack posts. Tighten the screws in the two bottom holes first, and then tighten the screws in the two top holes. Check that the mounting brackets on each side of the rack are lined up with each other.

Figure 44: Attach the switch to the rack - 8-port and 12-port switches

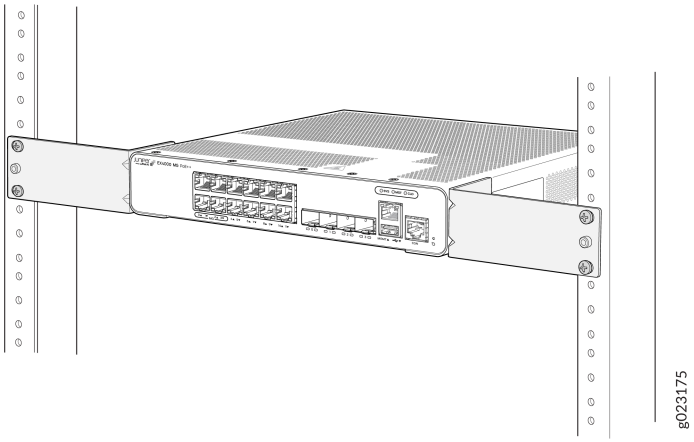

Figure 45: Attach the switch to the rack - 24-port or 48-port switches

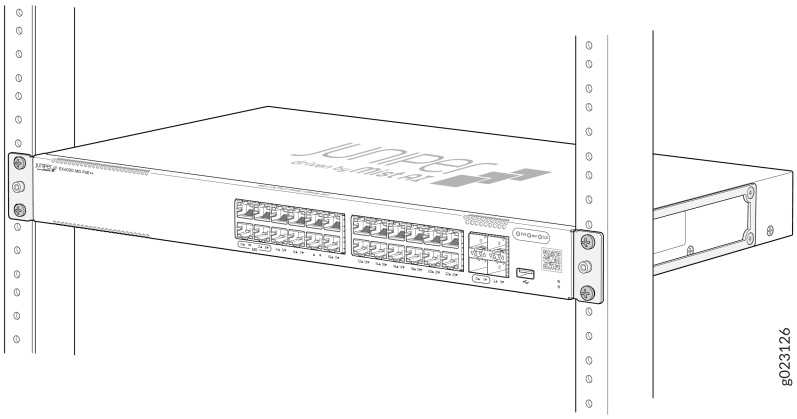

Mount an EX4000 Switch on Four Posts in a Rack or Cabinet (EX4000-24P, EX4000-24T, EX4000-24MP, EX4000-48P, EX4000-48T, and EX4000-48MP) by using EX-4PST-RMK

Before mounting the switch on four posts in a rack:

- Verify that the site meets the requirements described in "EX4000 Site Guidelines and Requirements" on page 65.

- Place the rack in its permanent location, allowing adequate clearance for airflow and maintenance, and secure it to the building structure.
- Read *General Safety Guidelines and Warnings*, with particular attention to *Chassis and Component Lifting Guidelines*.

Ensure that you have the following parts and tools available:

- Phillips (+) screwdriver, number 2
- 12 flat-head 4x6-mm Phillips mounting screws (provided with the four-post rack-mounting kit)
- One pair of side-mounting rails (provided with the four-post rack-mounting kit)
- One pair of rear-mounting blades (provided with the four-post rack-mounting kit)
- Screws to secure the chassis and the rear-mounting blades to the rack (not provided)

You can mount an EX4000 switch on four posts of a 19-in. rack or cabinet by using the separately orderable four-post rack-mounting kit. (The remainder of this topic uses *rack* to mean *rack or cabinet*.)

NOTE: If you need to mount the switch in a recessed position on a four-post rack, you can use the 2-in.-recessed front-mounting brackets provided.

NOTE: One person must be available to lift the switch while another secures the switch to the rack.

CAUTION: If you are mounting multiple units on a rack, mount the heaviest unit at the bottom of the rack and mount the other units from the bottom of the rack to the top in decreasing order of the weight of the units.

To mount the switch on four posts in a rack:

1. Remove the switch from the shipping carton (see "Unpack the EX4000 Switch" on page 81).
2. Place the switch on a flat, stable surface.
3. Align the side mounting rails along the side panels of the switch chassis and insert and tighten the eight 4x6 mm Phillips flat-head mounting screws to secure the side panels to the two sides of the switch chassis.

Figure 46: Attach side mounting rails to the switch chassis

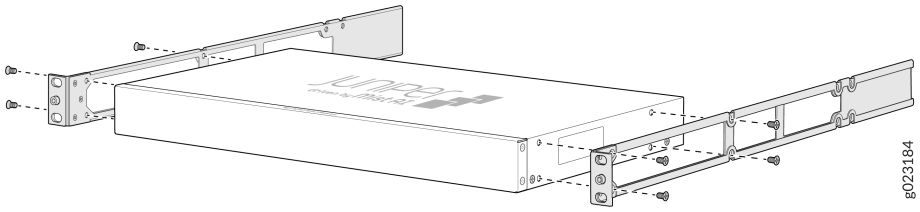

4. Have one person grasp both sides of the switch, lift the switch, and position it in the rack, aligning the holes on the side mounting rail with the threaded holes in the front post of the rack. Have the person align the bottom hole in both the front-mounting brackets with a hole in each rack rail, making sure that the chassis is level.

Figure 47: Attach the front mounting brackets to the rack

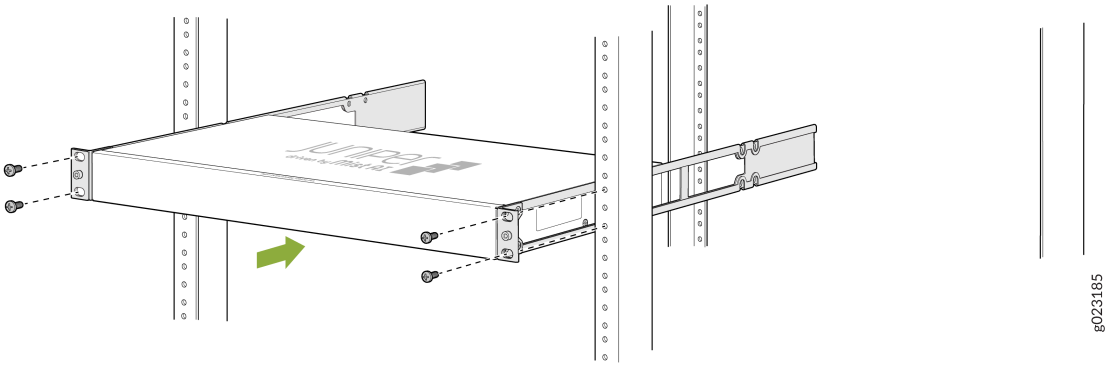

5. Have a second person secure the front of the switch to the rack by using the appropriate screws for your rack.
6. Slide the rear-mounting blades into the side mounting-rails.

Figure 48: Attach rear-mounting blades

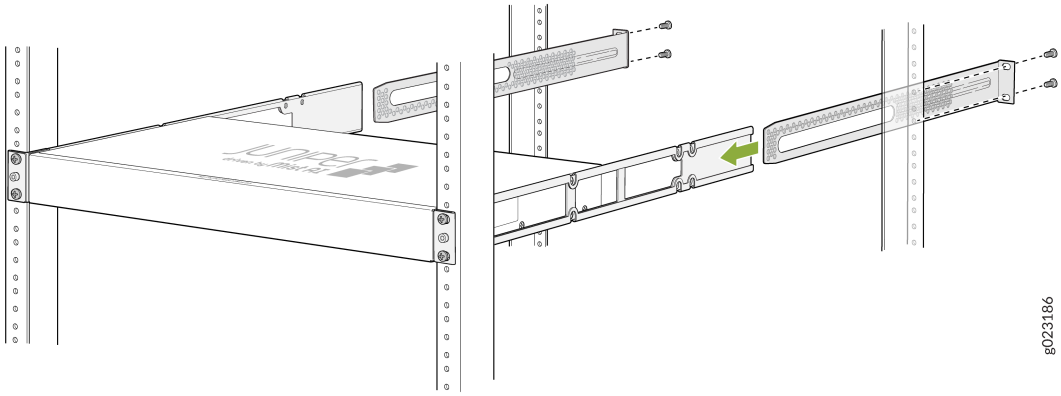

7. Attach the rear-mounting blades to the rear post by using the appropriate screws for your rack. Tighten the screws.

Figure 49: Attach the rear-mounting blades to the rear post

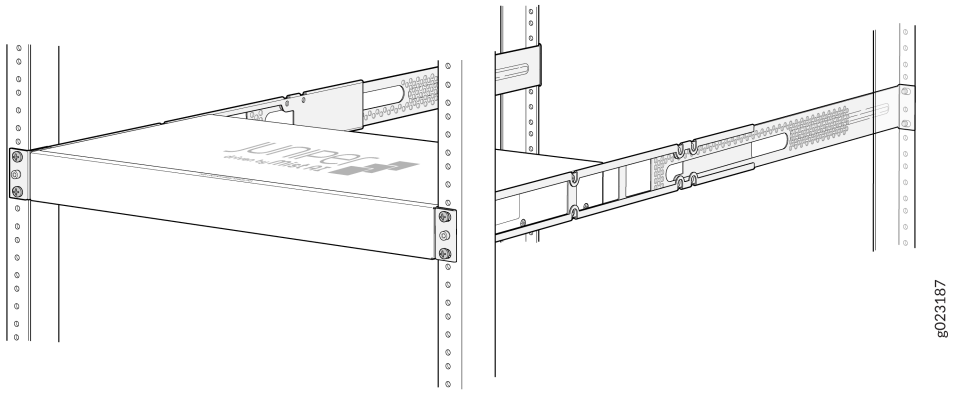

8. Ensure that the switch chassis is level by verifying that all the screws on the front of the rack are aligned with the screws at the back of the rack.

Mount an EX4000 Switch in a Recessed Position in a Rack or Cabinet (EX4000-24P, EX4000-24T, EX4000-24MP, EX4000-48P, EX4000-48T, and EX4000-48MP) by using EX-4PST-RMK

You can mount an EX4000 switch in a rack or cabinet in a recessed position; the switch is recessed inside the rack from the front of the rack by 2 inches. You can use the 2-in.-recessed front-mounting brackets provided in the separately orderable four-post rack-mounting kit to mount the switch in a recessed position.

Reasons that you might want to mount the switch in a recessed position include:

- You are mounting the switch in a cabinet, and the cabinet doors do not close completely unless the switch is recessed.
- The switch you are mounting has transceivers installed in the uplink ports, and the transceivers in the uplink ports protrude from the front of the switch.

Before you mount an EX4000 switch in a recessed position inside a 19-in. four-post rack:

- Verify that the site meets the requirements described in "EX4000 Site Guidelines and Requirements" on page 65.
- Place the rack in its permanent location, allowing adequate clearance for airflow and maintenance, and secure it to the building structure.
- Read *General Safety Guidelines and Warnings*, with particular attention to *Chassis and Component Lifting Guidelines*.

Ensure that you have the following parts and tools available:

- Number 2 Phillips (+) screwdriver (not provided)
- Eight screws to secure the mounting brackets to the rack (not provided)
- An ESD grounding strap (not provided)
- Recessed-mounting brackets to mount the switch in a recessed position from the front posts of a rack—2 (provided with the four-post rack-mounting kit)
- Flat head 4-40 Phillips screws to attach the recessed-mounting brackets to the side rails of the bracket assembly—6 (provided with the four-post rack-mounting kit)
- Flat head 4x6-mm Phillips screws to attach the front-mounting bracket assembly to the chassis—12 (provided with the four-post rack-mounting kit)

To mount an EX4000 switch in a recessed position from the front posts of a 19-in. four-post rack:

1. Remove the switch from the shipping carton (see "Unpack the EX4000 Switch" on page 81).
2. Place the switch on a flat, stable surface.
3. The L-shaped front-mounting brackets is already attached to the side mounting rails using the 6 4-40 flat-head Phillips mounting screws. Unscrew and detach this L-shaped front-mounting brackets from the side rail to attach the recessed mounting bracket to the side rail.

Figure 50: Remove the L-shaped front-mounting brackets

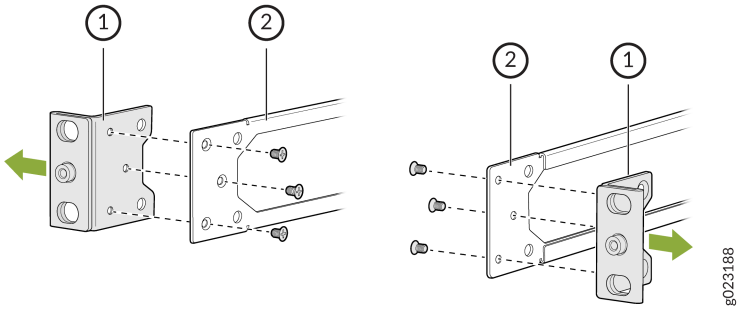

4. Attach the 2-in. recessed mounting brackets to the side rails by using the flat head 4-40 Phillips screws provided.

Figure 51: Attach the recessed mounting brackets to the side rail

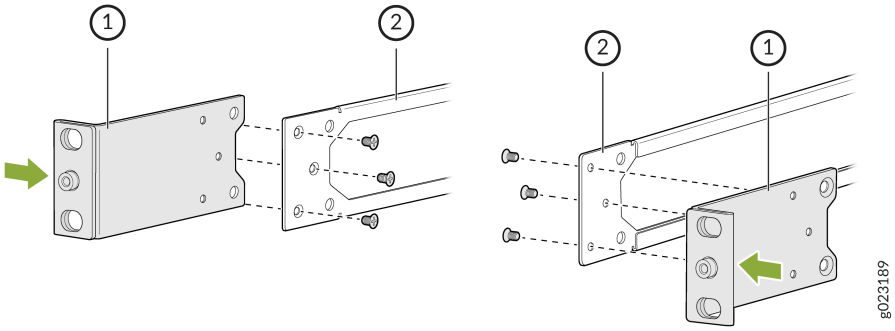

5. Align the recessed-mounting bracket assembly along the side panel of the switch.
6. Insert the flat head 4x6-mm Phillips screws to attach the recessed mounting bracket assembly into the aligned holes on the chassis and tighten the screws.

Figure 52: Attach the recessed mounting bracket assembly to the chassis

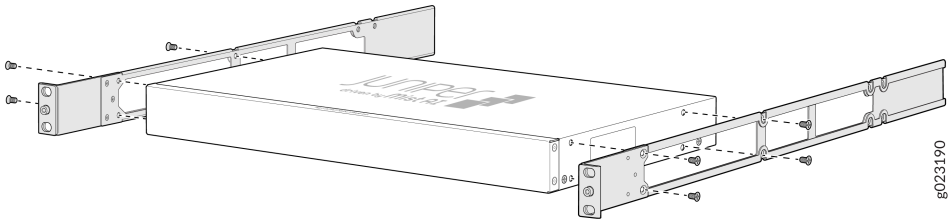

7. Have one person grasp both sides of the switch, lift the switch, and position it in the rack, aligning the holes of the mounting brackets with the threaded holes in the front post of the rack. Have the person align the bottom hole in both the mounting brackets with a hole in each rack rail, making sure that the chassis is level.
8. Have a second person secure the mounting brackets to the rack by using four screws appropriate for your rack. Tighten the screws.

Figure 53: Attach the recessed mounting brackets to the rack

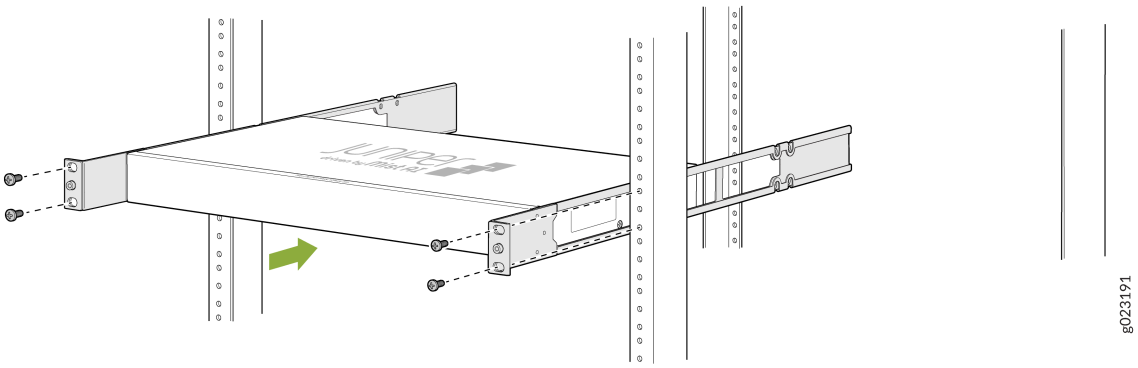

9. Slide the rear-mounting bracket blades into the side rails of the recessed-mounting bracket assembly attached to the switch chassis.

Figure 54: Attach the rear-mounting bracket blades to the side rails

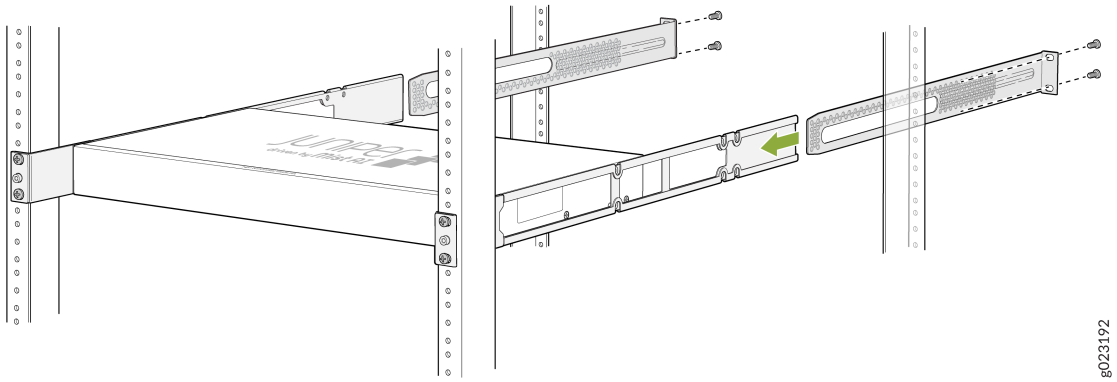

10. Ensure that the chassis is level. Align the holes of the rear-mounting brackets with the threaded holes in the rear post of the rack. Align the bottom hole in both the mounting brackets with a hole in each rack rail. Align the bottom hole in both the rear-mounting brackets with the bottom hole in the front-mounting brackets.
11. Secure the rear-mounting brackets to the rear post of the rack by using four screws appropriate for your rack.

Figure 55: Secure the rear-mounting brackets to the rear post

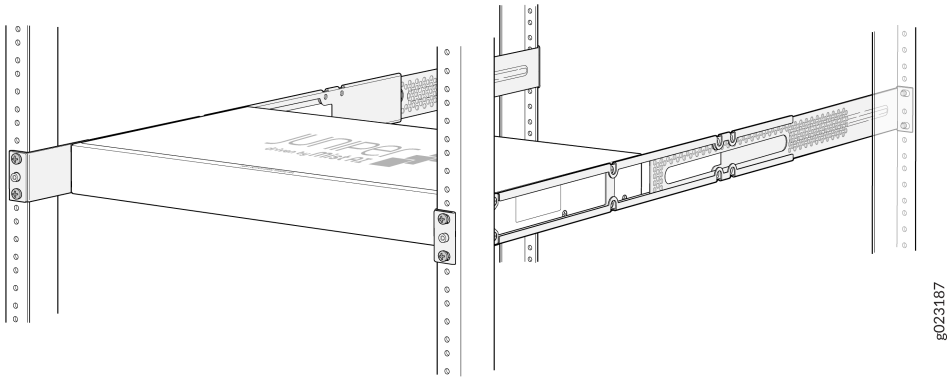

12. Look around the installed switch to ensure that the switch is installed correctly.
13. If required, cover the SFP ports with the dust covers.

Mount an EX4000 Switch in a Rack or Cabinet by Using the Enhanced 4-post JNP-4PST-RMK-1U-E Rack Mount Kit (EX4000-24P, EX4000-24T, EX4000-24MP, EX4000-48P, EX4000-48T, and EX4000-48MP)

IN THIS SECTION

- Mount the Device by Using the Enhanced JNP-4PST-RMK-1U-E Rack Mount Kit On a Square Hole Rack | 95
- Mount the Device by Using the Enhanced JNP-4PST-RMK-1U-E Rack Mount Kit On a Threaded Hole Rack | 100

You can mount the EX4000 switch on a square hole or threaded hole four-post 19-in. racks using the enhanced JNP-4PST-RMK-1U-E rack mount kit.

JNP-4PST-RMK-1U-E rack mount kit consists of the following parts:

- A pair of front and rear mounting rails
- A pair of mounting brackets
- 16 flat head M4 x 6mm Phillips screws

A four-post installation evenly supports the device by all four corners.

Mount the Device by Using the Enhanced JNP-4PST-RMK-1U-E Rack Mount Kit On a Square Hole Rack

Ensure that you have the following tools and parts available:

- An ESD grounding strap—not provided.
- Number 2 Phillips (+) screwdriver—not provided
- A pair of front and rear mounting rails that attach to the rack posts—provided with the rack mount kit
- A pair of mounting brackets and 16 flat head M4 x 6mm Phillips screws. These brackets attach to the device if not pre-installed—provided with the rack mount kit

To mount the device on four posts in a rack by using the enhanced JNP-4PST-RMK-1U-E rack mount kit:

1. Wrap and fasten the ESD grounding strap to your bare wrist and an connect the other end of the strap to the ESD point on the device.

2. Assemble the mounting rails.

   a. Slide the rear floating bracket into the front bracket and assemble the mounting rails.

Figure 56: Assemble the Mounting Rails

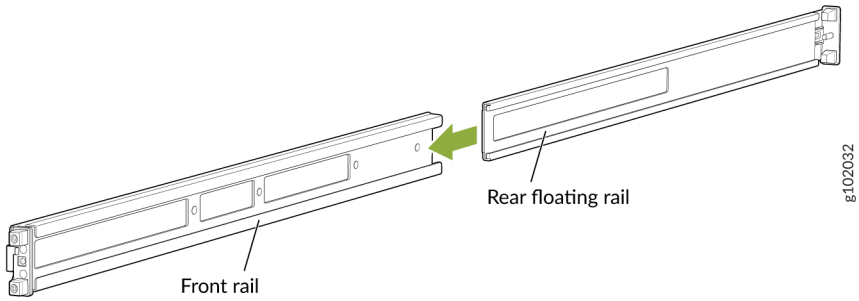

   b. Mounting rails assembled.

Figure 57: Front and Rear Rails Assembled

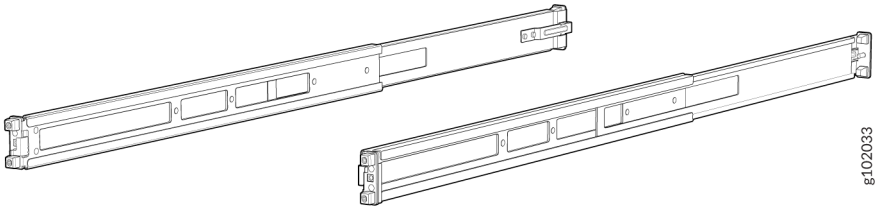

3. Attach the mounting rails to the rack.

   a. Align the guide blocks of the rear mounting rails with the rear-post holes. Pull the rear mounting rails toward the front of the rack to lock the rails in place. You will hear a click sound when the latch locks into the corresponding rack holes.

Figure 58: Install the Rear Floating Rails

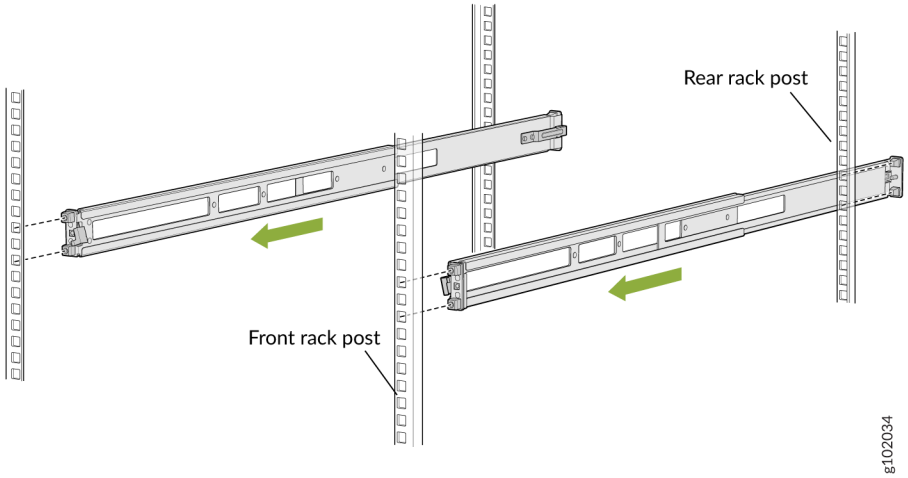

b. Move the latch lock on the front mounting rails to open position, slide the front mounting rails, and insert the guide blocks into the front rack posts.

Figure 59: Install the Front Mounting Rails

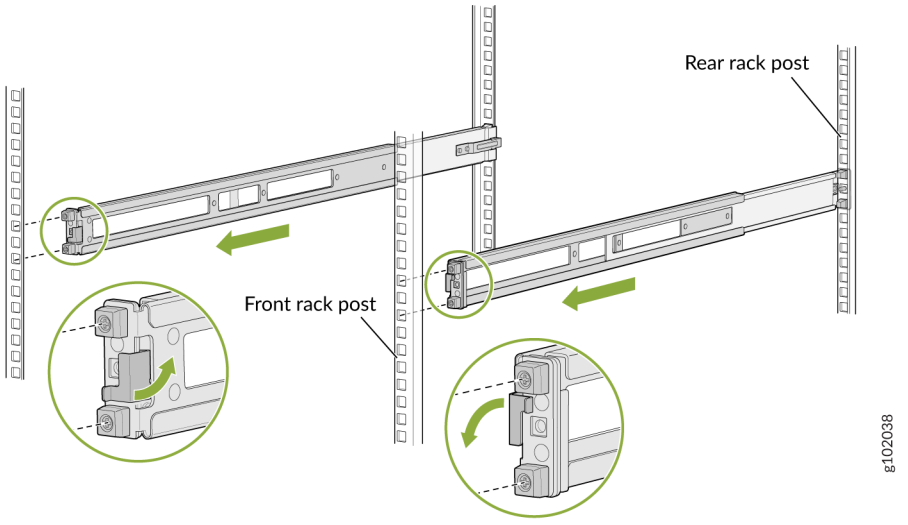

c. Push the lock latch to the locked position.

Figure 60: Front Mounting Rails Lock Latch

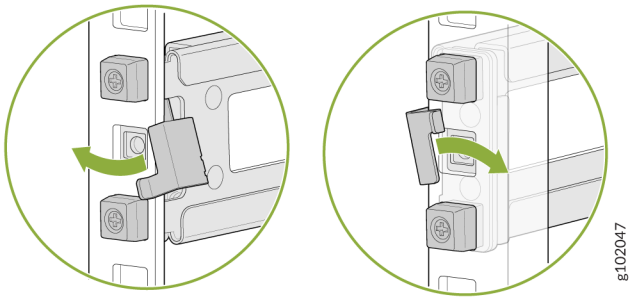

d. Visually ensure that the front and rear latches are locked into place on the mounting rails.

Figure 61: Mounting Rails Installed and Locked

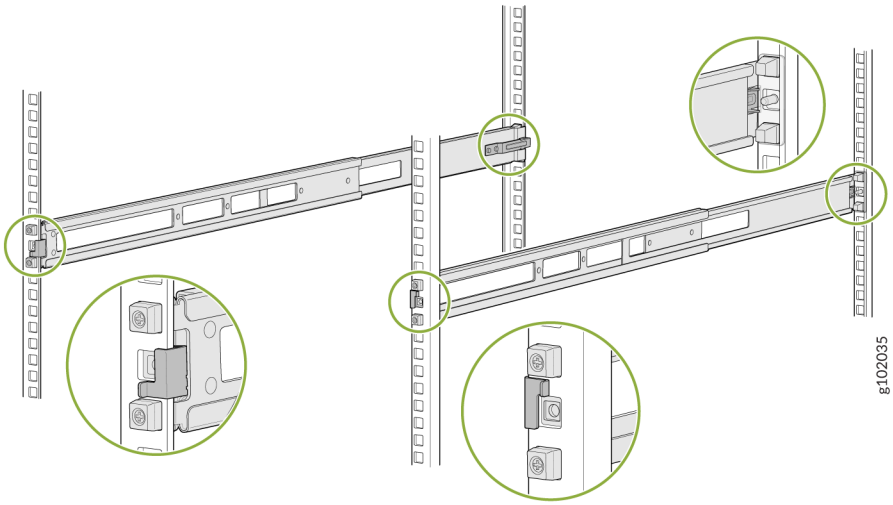

4. Attach mounting brackets to the device if not pre-installed. If your device already has the mounting brackets pre-installed than skip this step and move to the next step.

   a. Align the holes on the mounting bracket with the screw holes on the side panel of the chassis.

   b. Insert the flat head M4 x 6mm Phillips screws to attach the mounting bracket into the aligned holes on the chassis. Tighten the screws.

Figure 62: Attach the Mounting Brackets to the Device

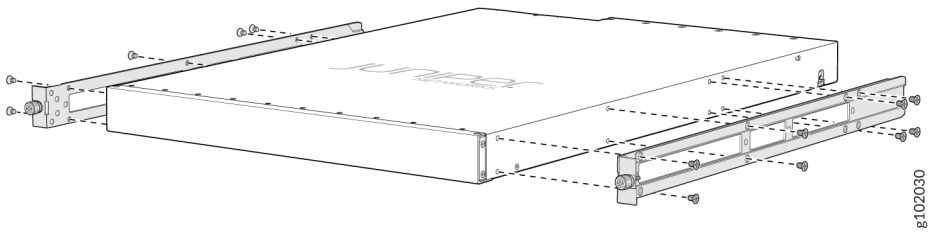

5. Position the device in such a manner that the **AIR OUT** labels on components are next to the hot aisle.
6. Grasp both sides of the device, lift it, and position the device such that the mounting rails slide into the channels of the mounting brackets.

Figure 63: Slide the Device into the Rack

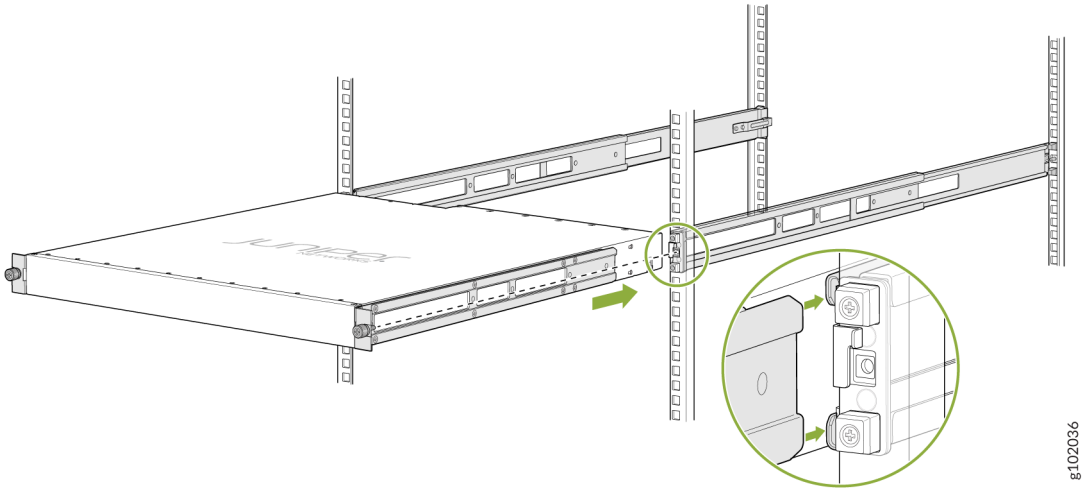

7. Tighten the two thumbscrews to secure the device.

Figure 64: Tighten the Thumb Screws

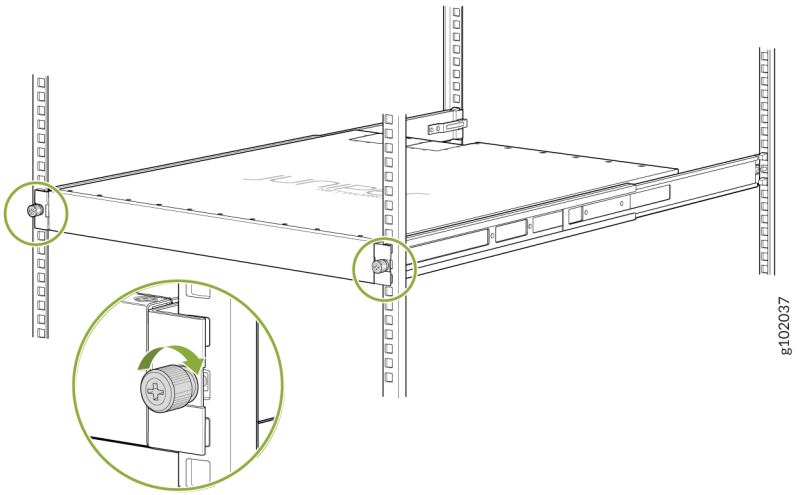

Mount the Device by Using the Enhanced JNP-4PST-RMK-1U-E Rack Mount Kit On a Threaded Hole Rack

Ensure that you have the following tools and parts available:

- An ESD grounding strap—not provided
- Number 2 Phillips (+) screwdriver—not provided
- A pair of front and rear mounting rails that attach to the rack posts—provided with the rack mount kit
- A pair of side mounting brackets and 16 flat head M4 x 6mm Phillips screws. These brackets attach to the device if not pre-installed—provided with the rack mount kit

To mount the device on four posts in a threaded hole rack by using the enhanced JNP-4PST-RMK-1U-E rack mount kit:

1. Wrap and fasten the ESD grounding strap to your bare wrist and connect the other end of the strap to the ESD point on the device.
2. Assemble the mounting rails.
   a. Remove the guide blocks from the front mounting rails by loosening the screws and preserve them for later use.

Figure 65: Remove Guide Blocks from Front Mounting Rail

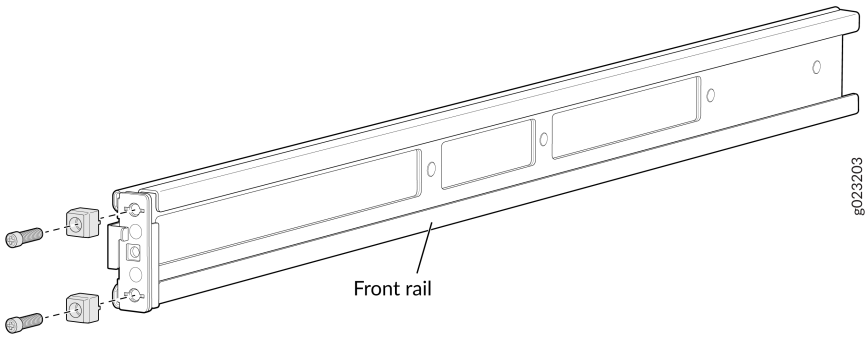

b. Remove the guide blocks from the rear floating rails by loosening the screws and washers. Preserve the guide blocks, screws, and washers for later use.

Figure 66: Remove Guide Blocks from Rear Floating Rail

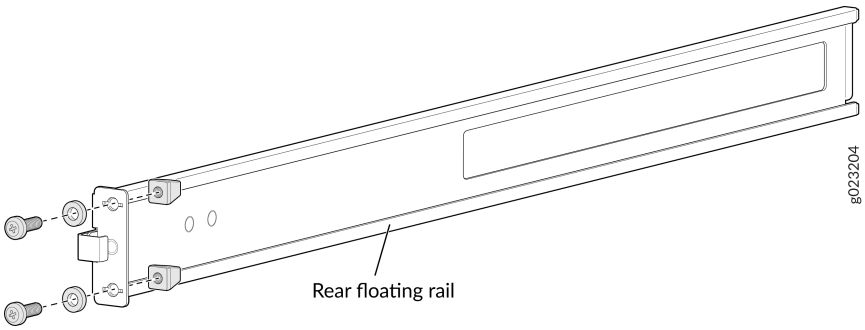

c. Slide the rear floating rails into the front mounting rails.

Figure 67: Slide Rear Floating Rail into Front Mounting Rail

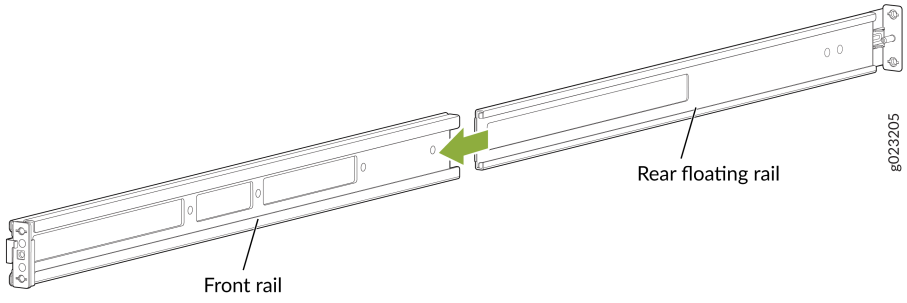

d. Mounting rails assembled.

Figure 68: Front and Rear Rails Assembled

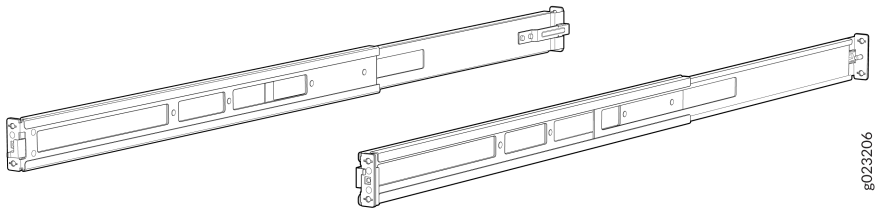

3. Attach the mounting rails to the threaded hole rack.

a. Align the guide blocks of the rear mounting rails with the rear-post holes. Pull the rear mounting rails toward the front of the rack to lock the rails in place. You will hear a click sound when the latch locks into the corresponding rack holes.

Figure 69: Install the Rear Floating Rails

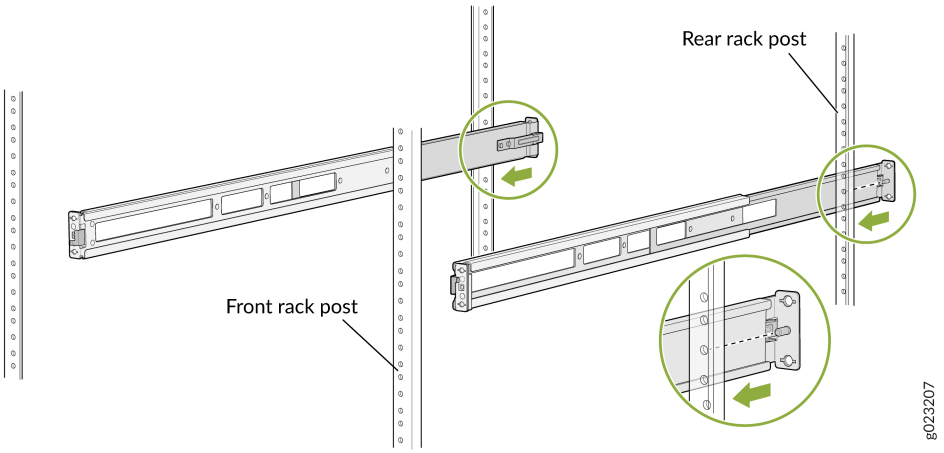

b. Move the latch locks on the front mounting rails to open position, slide the front mounting rails and align them to the front rack post. Push the lock latch to locked position and using the screws removed in step "Remove Guide Blocks from Front Mounting Rail" and the washers removed in step "Remove Guide Blocks from Rear Floating Rail".

Figure 70: Install the Front Mounting Rails

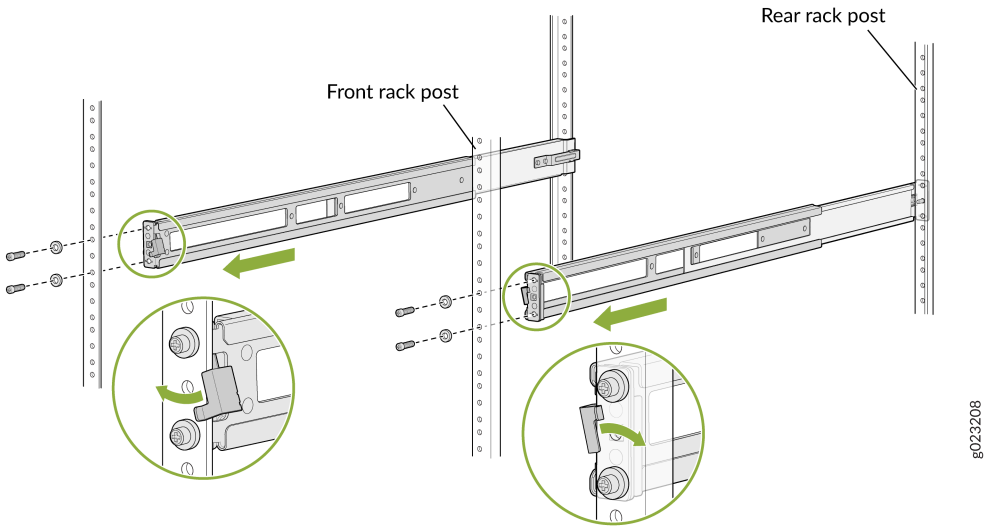

c. Secure the rear floating rails to the rear rack post by using screws (not provided) appropriate for your rack threaded size.

Figure 71: Secure the Rear Floating Rails

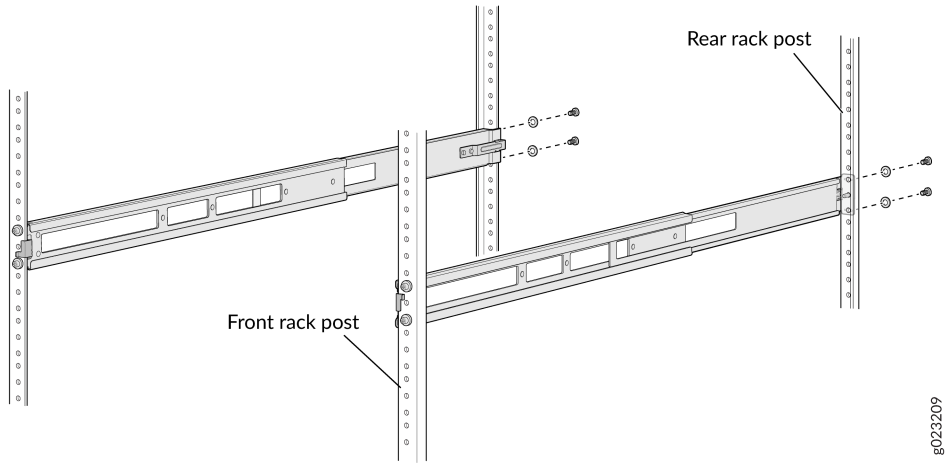

d. Visually ensure that the front and rear latches are locked into place on the mounting rails.

Figure 72: Mounting Rails Installed and Secured

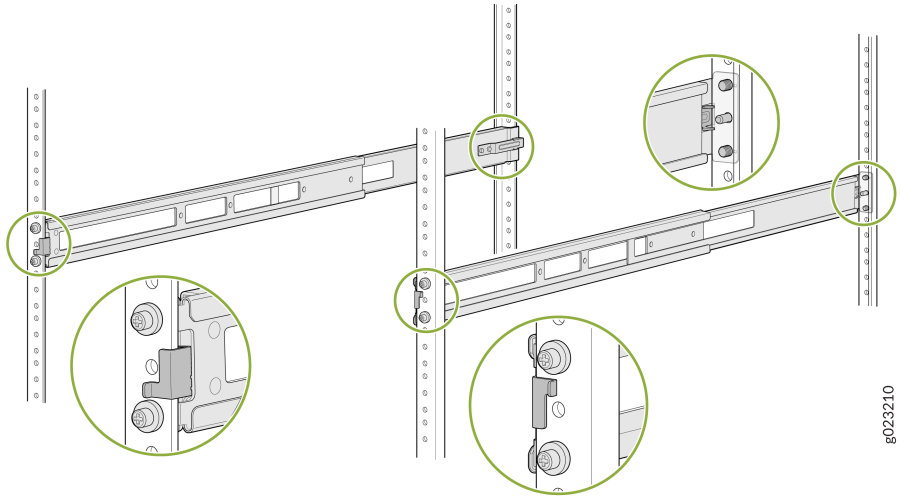

4. Attach mounting brackets to the device if not pre-installed. If your device already has the mounting brackets pre-installed than skip this step and move to the next step.

   a. Align the holes on the mounting bracket with the screw holes on the side panel of the chassis.

   b. Insert the flat head M4 x 6mm Phillips screws to attach the mounting bracket into the aligned holes on the chassis. Tighten the screws.

Figure 73: Attach the Mounting Brackets to the Device

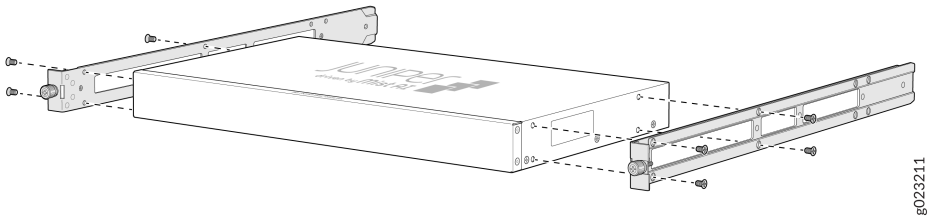

5. Position the device in such a manner that the **AIR OUT** labels on components are next to the hot aisle.
6. Grasp both sides of the device, lift it, and position the device such that the mounting rails slide into the channels of the mounting brackets.

Figure 74: Slide the Device into the Rack

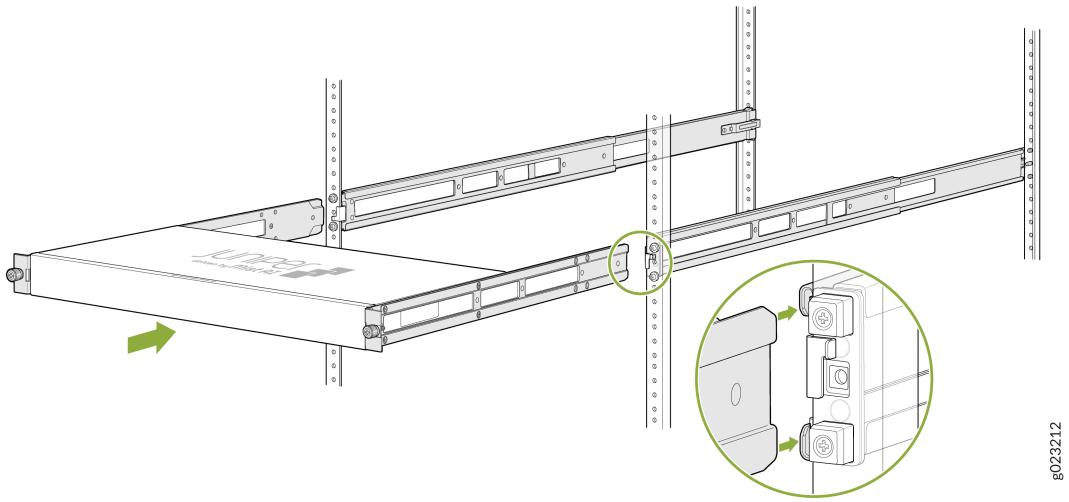

7. Tighten the two thumbscrews to secure the device.

Figure 75: Tighten Thumb Screws

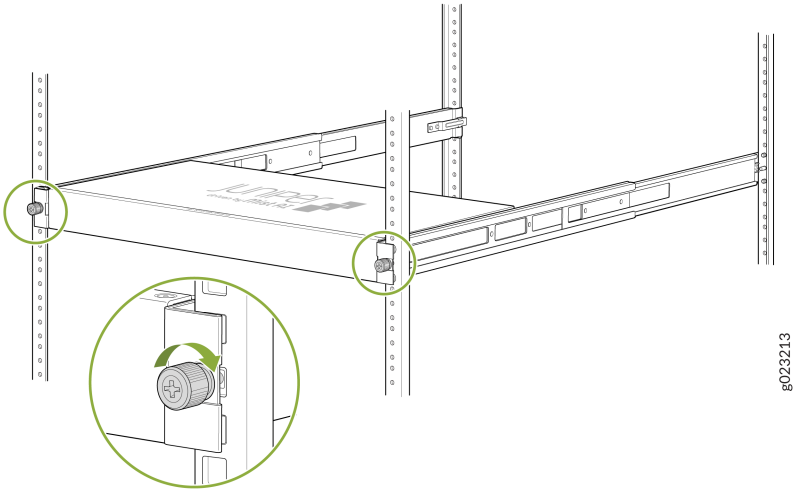

Mount an EX4000 Switch on a Wall (EX4000-8P, EX4000-12T, EX4000-12P, and EX4000-12MP)

Before mounting a switch on a wall:

- Verify that the site meets the requirements described in "Site Preparation Checklist for EX4000 Switches" on page 64.
- Read *General Safety Guidelines and Warnings*, with particular attention to *Chassis and Component Lifting Guidelines*.

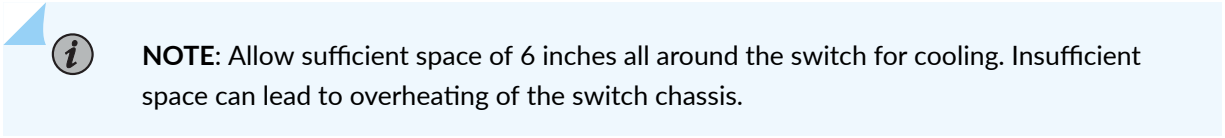

NOTE: Allow sufficient space of 6 inches all around the switch for cooling. Insufficient space can lead to overheating of the switch chassis.

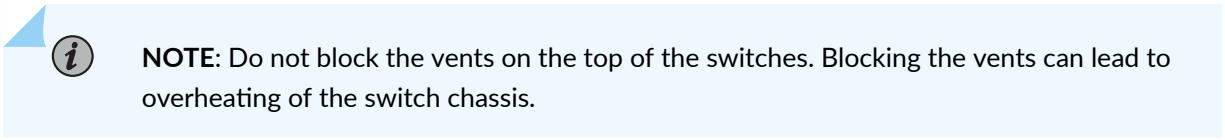

NOTE: Do not block the vents on the top of the switches. Blocking the vents can lead to overheating of the switch chassis.

Ensure that you have the following parts and tools available:

- 1 wall-mounting bracket (provided in the wall-mounting kit)
- 4 screws (M4 x 5 mm) to attach mounting bracket to the switch (provided in the wall-mounting kit)
- 4 wall mounting screws (M4 x 20 mm) to mount unit on a wall (provided in the wall-mounting kit)
- 4 hollow wall anchors (provided in the wall-mounting kit)
- Phillips (+) screwdriver, number 2 (not provided)

You can mount an EX4000 switch on a wall by using the separately orderable wall-mounting kit.

To mount one or two switches on a wall:

1. Remove the switch from the shipping carton (see "Unpack the EX4000 Switch" on page 81).
2. Attach the wall-mounting bracket to the bottom of the switch using the 4 M4 x 5 mm screws.

Figure 76: Attach the wall-mounting bracket to the bottom of the switch

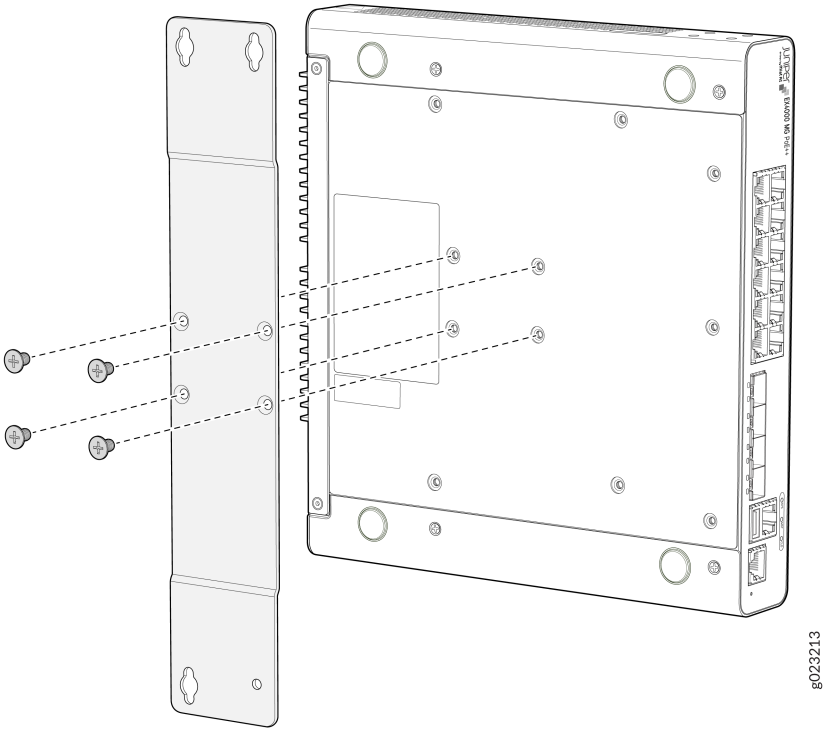

3. Drill 6 mm holes on the wall at four places as shown in the following figure. These are the wall measurements for installing mounting screws to mount the switch.

Figure 77: Wall measurements for installing mounting screws

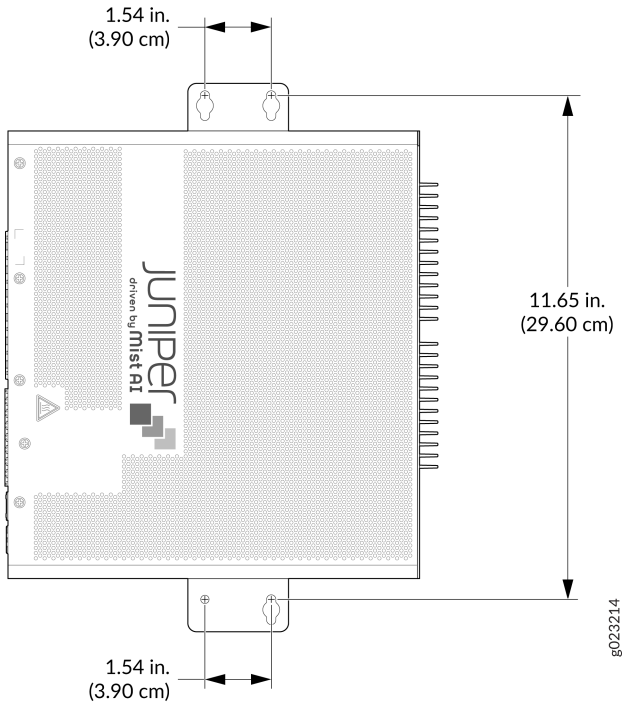

4. Place the switch against the wall such that the front panel or ports of the switch faces to its right or left side and the holes in the mounting bracket heads align with the mounting screw heads.
5. Install the four hollow wall anchors as shown in 1 in the following figure. Install the three wall mounting screws marked as shown in 2 in the following figure. Tighten the screws only partway in, leaving about 1/4 in. (6 mm) distance between the head of the screw and the wall. Hook on the switch over the wall mount screws. Install the fourth wall mounting screw as shown in 4 in the following figure. Fasten all screws.

Figure 78: Install hollow wall anchors and mounting screws

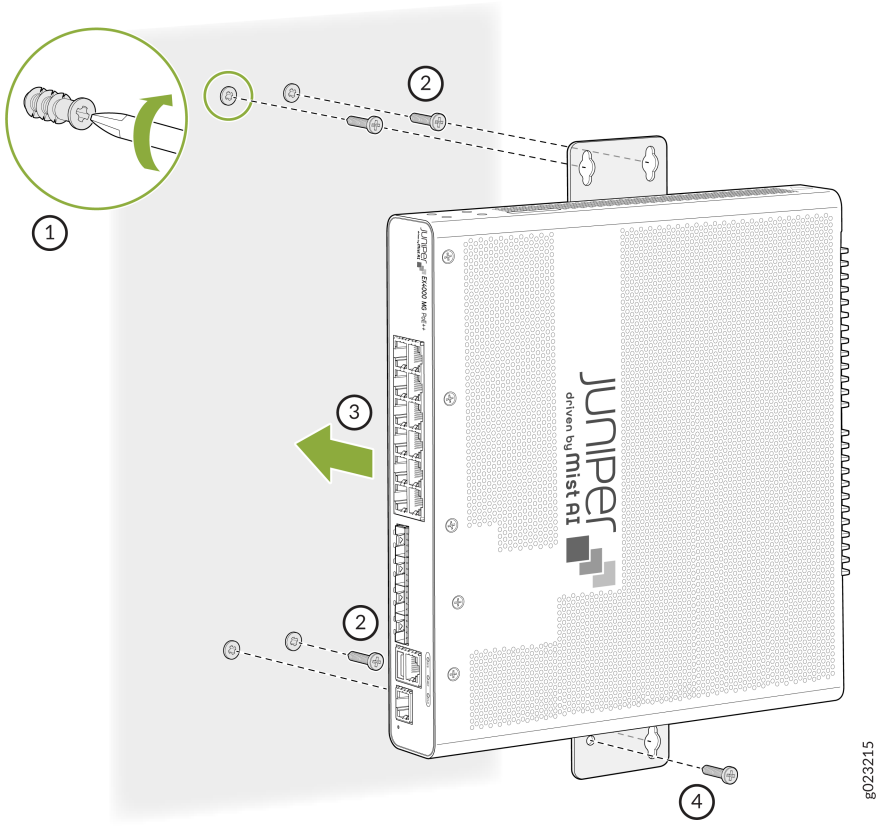

Figure 79: Mount the switch onto the wall

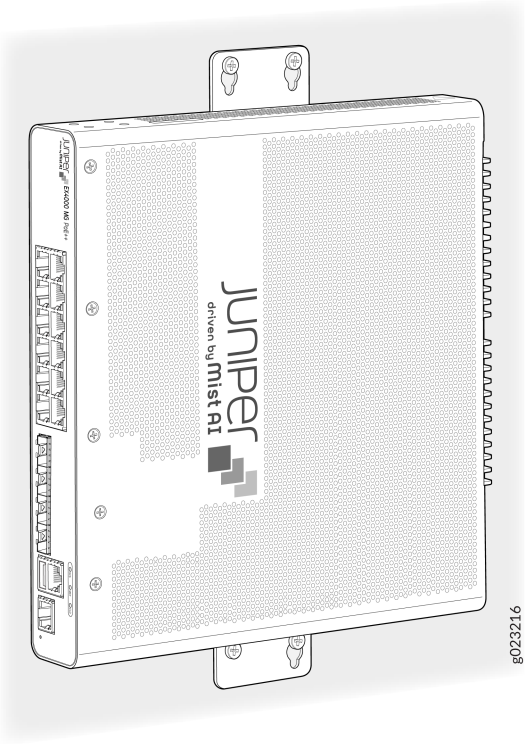

Mounting an EX4000 Switch on a Desk (EX4000-8P, EX4000-12T, EX4000-12P, and EX4000-12MP)

You can mount an EX4000 switch on a desk or other level surface. The surface should be flat or level and shall not be an inclined surface or area. Desktop mounting is the default mounting for EX4000-8P, EX4000-12T, EX4000-12P, and EX4000-12MP.

NOTE: Allow sufficient space of 6 inches all around the switch for cooling. Insufficient space can lead to overheating of the switch chassis.

Do not block the vents on top of the switch to prevent the switch chassis from overheating.

Ensure that the desktop or any other level surface is stable and securely supported.

To mount a switch on a desk or other level surface:

1. Place the switch on the desk or the level surface.

2. Ensure that the switch rests firmly on the desk or level surface.

Mounting an EX4000 Switch Under a Desk or Other Level Surface (EX4000-8P, EX4000-12T, EX4000-12P, and EX4000-12MP)

Ensure that you have the following parts and tools available:

> **NOTE**: Under the desk mounting kit uses the wall mounting kit.

- 1 under the desk mounting bracket (provided in the wall-mounting kit)
- 4 screws (M4 x 5 mm) to attach the mounting bracket to the switch (provided in the wall-mounting kit)
- 4 screws (M4 x 15 mm) to mount the switch under a desk (provided in the wall-mounting kit)
- Phillips (+) screwdriver, number 2 (not provided)

You can mount the EX4000 switch under a desk or other level surface. You do this by attaching the mounting brackets to the chassis and securing it to the surface under the desk.

> **NOTE**: Allow clearance of 6 inches all around the switch for thermal cooling.

> **NOTE**: The desk or level surface should be suitable to hold screws firmly.
> The thickness of the wooden desk, shall be more than the screw length and also be strong enough to withstand the weight of the switch.

> **NOTE**: Do not block the vents on the top of the switches. Blocking the vents can lead to overheating of the switch chassis.

To mount the switch under a desk or other level surface by using screws:

1. Assemble the mounting bracket to the switch using the 4 M4 x 5 mm screws.

Figure 80: Assemble the mounting bracket to the switch

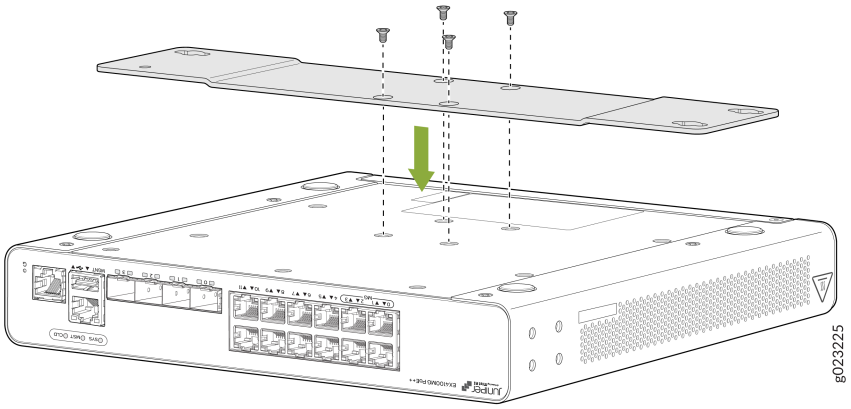

2. Drill holes under the desk at four places as shown in the following figure. The recommended depth of the hole is 3.3 mm.

Figure 81: Measurements for installing mounting screws for mounting the switch under the desk

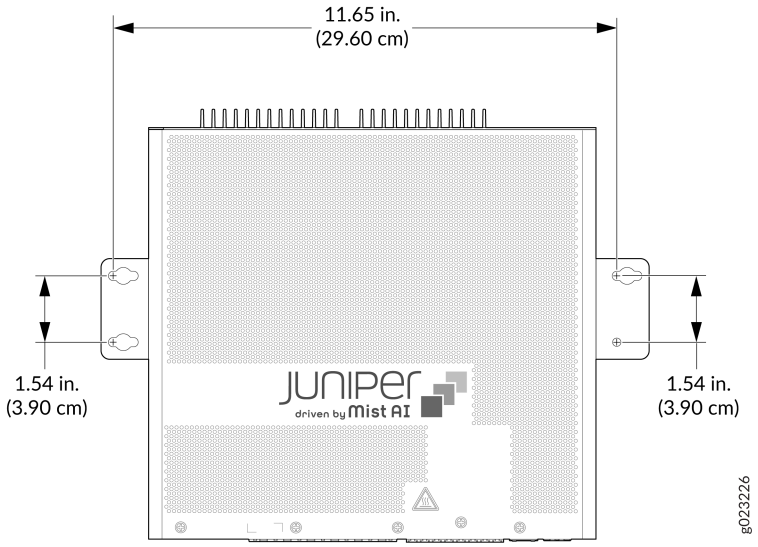

3. Install the three M4 x 15 mm mounting screws as shown in 1 in the following figure. Tighten the screws only partway in, leaving about 1/4 in. (6 mm) distance between the head of the screw and the wall. Hook on the switch over the screws. Place the switch such that the front panel or ports of the switch is facing you. Install the fourth mounting screw shown as 3 in the following figure. Tighten the screws.

Figure 82: Align the switch to the screws under the desk

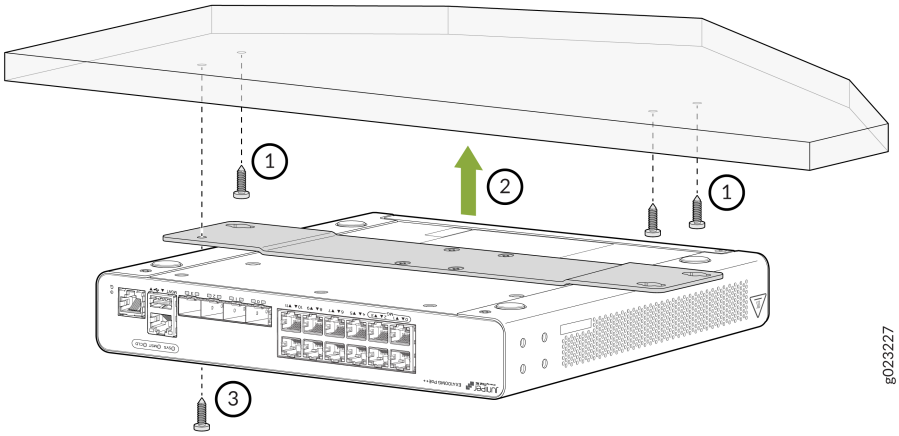

Figure 83: Tighten the screws to secure the switch under the desk

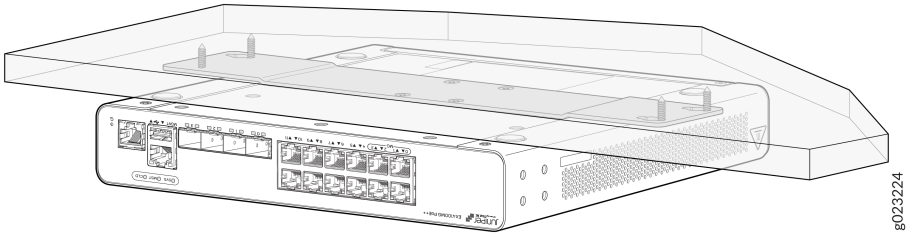

Mounting an EX4000 Switch on a Ferrous Wall using Magnet Pads (EX4000-8P, EX4000-12T, EX4000-12P, and EX4000-12MP)

Ensure that you have the following parts and tools available:

- One magnet tray
- Four M4 screws
- One magnet pad

NOTE: If you do not install the magnet and the device correctly, it could lead to a hazardous condition. You must follow these instructions to keep yourself and the equipment safe:

- Use only the magnet kit provided by Juniper to mount your device.
- You can mount the switches on a ferrous wall in IT or secure room using magnet pads.

NOTE:

- You can mount the switches on a ferrous wall using magnet pads, at a height of no more than 2 meters.
- The ferrous wall shall be smooth and free of any contaminants like oil, grease, dirt, etc., as otherwise the unit may fall.
- The ferrous wall on which the switch is mounted shall not be close to any area where vibration or impact may occur. The product shall not be mounted in a place where direct sunlight occurs. Also, mounting the product near any heat generating area can cause the mounting to malfunction.
- Allow sufficient space of 6 inches all around the switch for cooling. Insufficient space can lead to overheating of the switch chassis.
- The ferrous wall on which the switch will be mounted shall be flat and the surface shall be without any undulation. The ferrous wall shall be well supported and strong enough to support the switch.

To mount the switch on a surface made of ferrous material:

1. Turn the chassis upside down.
2. Use the Phillips (+) screwdriver (number 2) to assemble the magnet tray on the bottom side of the switch by using four M4 screws.

Figure 84: Magnet tray assembled on the bottom side of the switch

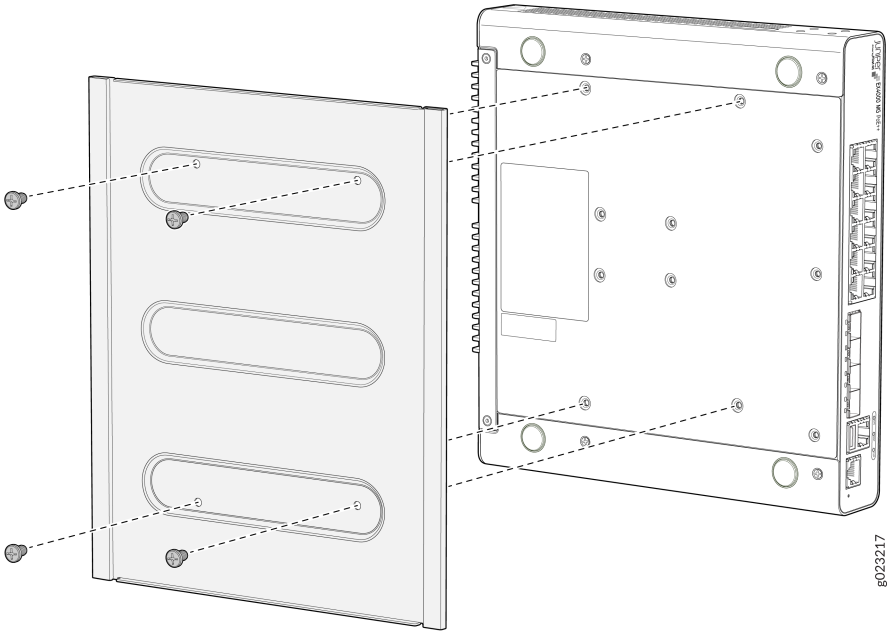

3. Attach the switch to the ferrous surface using the magnet pad.

Figure 85: Attach the switch to the ferrous surface

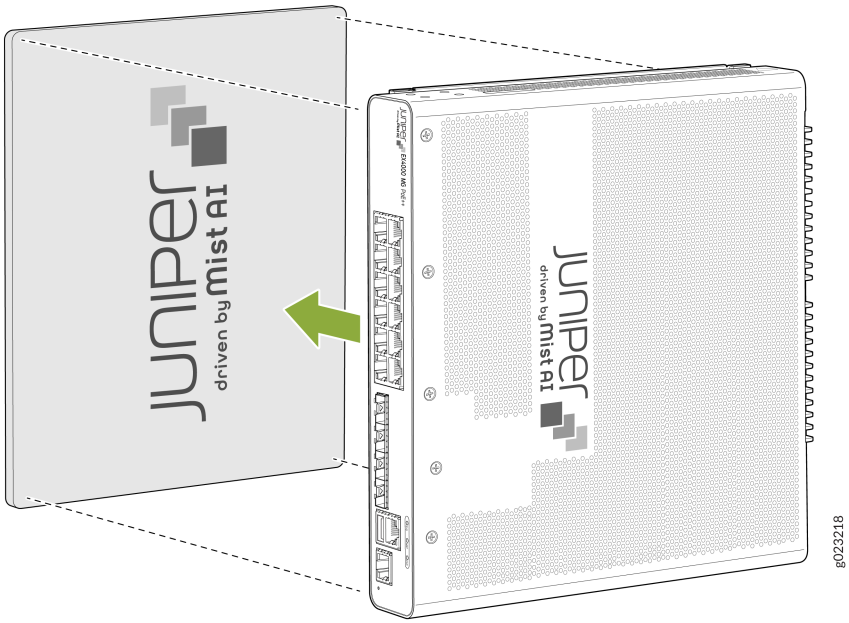

Mounting an EX4000 Switch on a DIN Rail (EX4000-8P, EX4000-12T, EX4000-12P, and EX4000-12MP)

Ensure that you have the following parts and tools available:

- DIN mounting bracket
- Four M4 Pan Head screws

NOTE:

- The product can be mounted onto a standard 35 mm DIN rail
- Allow sufficient space of 6 inches all around the switch for cooling. Insufficient space can lead to overheating of the switch chassis.

1. Use the Phillips (+) screwdriver, number 2, to assemble the DIN mounting bracket using four M4 Pan Head screws onto the bottom of the switch chassis.

Figure 86: Assembling the DIN mounting bracket

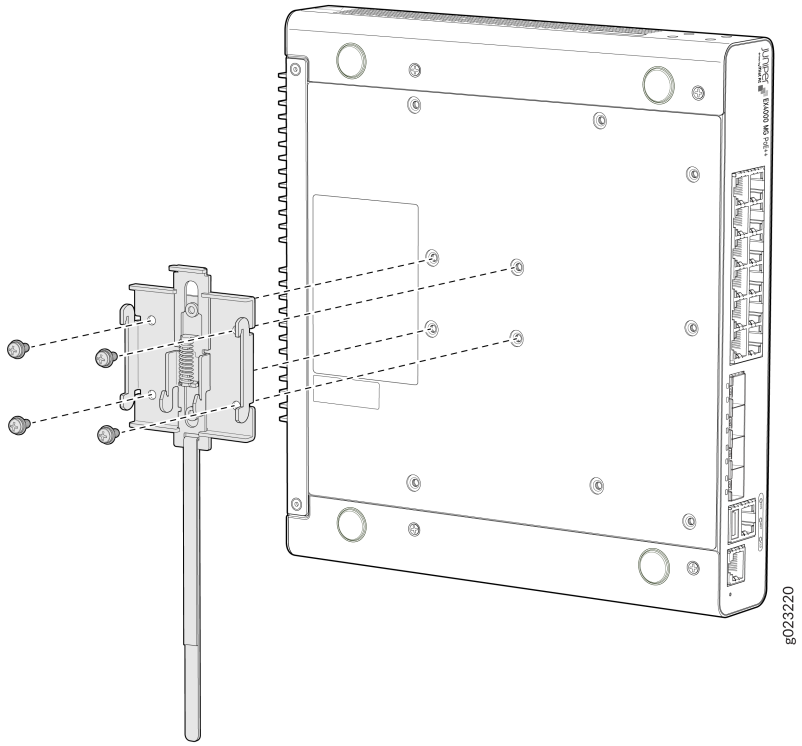

2. Position the switch in front of the DIN rail.
3. Clip the DIN mounting bracket onto the standard 35 mm DIN rail.

Figure 87: Clipping the DIN mounting bracket onto the DIN Rail

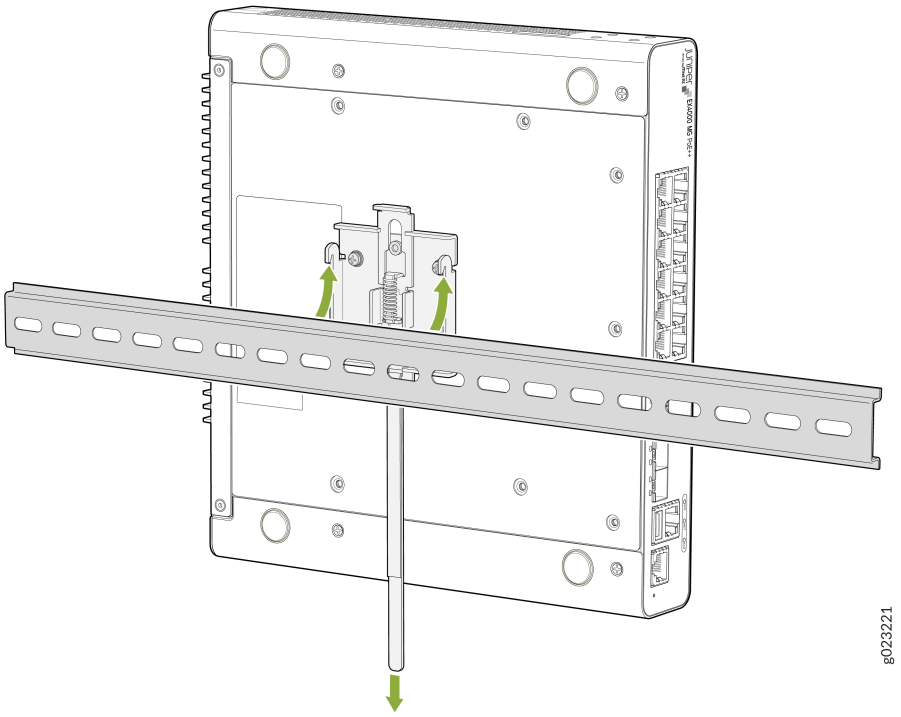

Unmounting an EX4000 Switch From a DIN Rail (EX4000-8P, EX4000-12T, EX4000-12P, and EX4000-12MP)

To unmount the switch from a DIN rail:

1. Ensure power is removed from the switch and all cables and connectors are removed from the switch.

Figure 88: Velcro pulled downwards to disengage the DIN mounting bracket

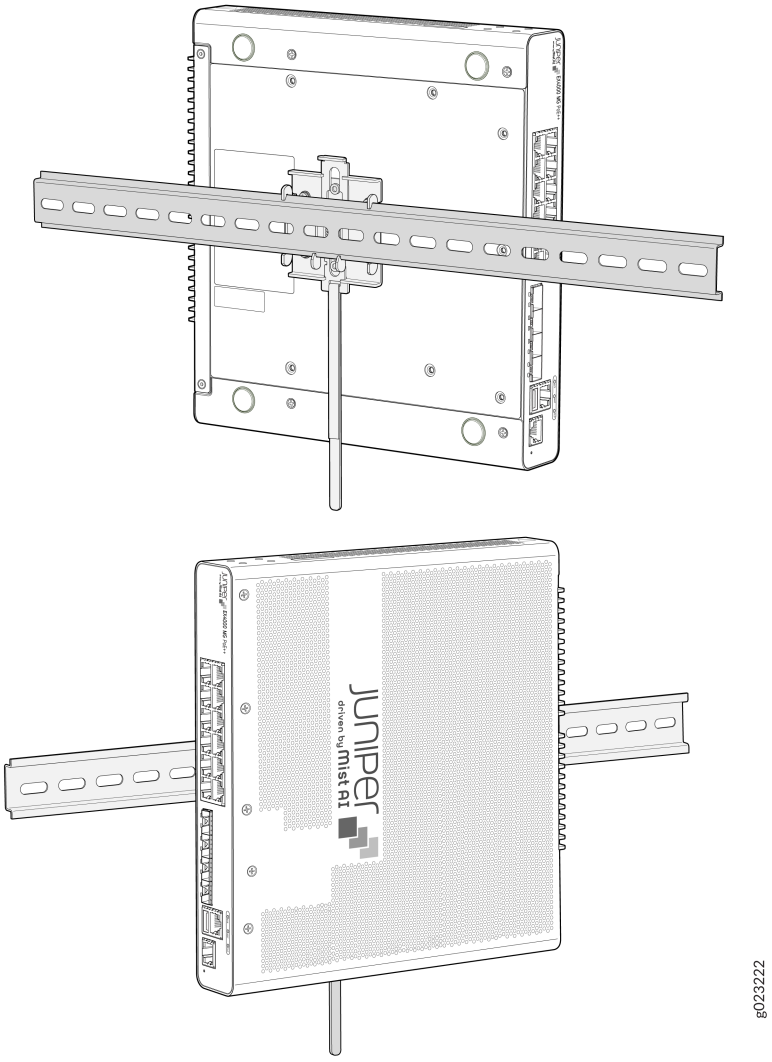

2. Slowly pull the lever down to disengage the DIN mounting bracket. While the switch is disengaged, pull the bottom of the switch away from the DIN rail and lift the hooks off the DIN rail.

Figure 89: Velcro pulled downwards to disengage the DIN mounting bracket

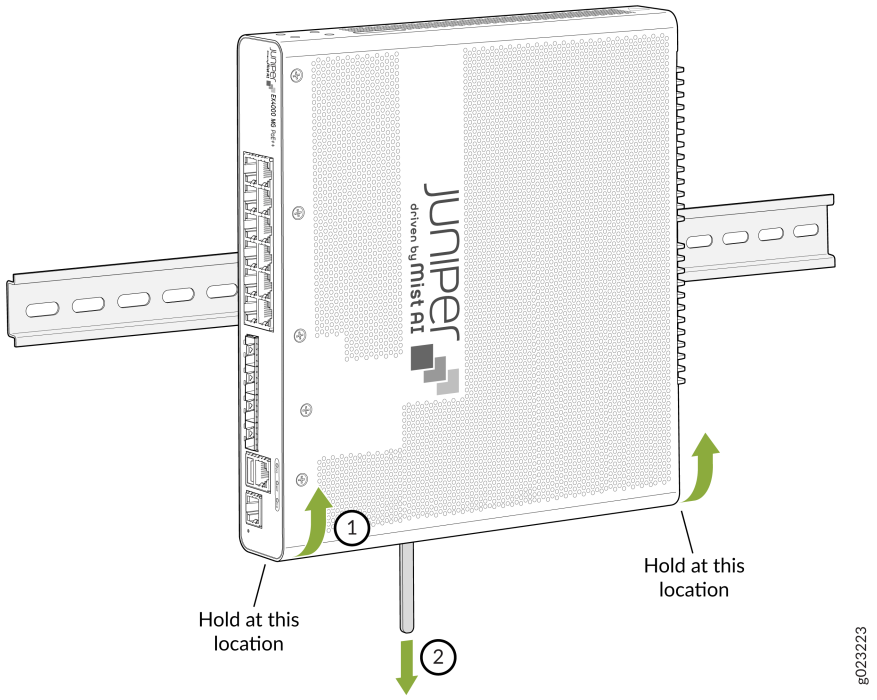

3. Remove the switch from the DIN rail mount.

Attaching the Cable Guard to Protect Cable Connections (EX4000-8P, EX4000-12T, EX4000-12P, and EX4000-12MP)

You can optionally attach cable guard to the chassis to protect cable connections.

Use the three M3 screws and Phillips (+) screwdriver, number 1, to attach the cable guard to the bottom of the chassis. Use thumbscrews to open or close the door of the cable guard.

Figure 90: Attaching a cable guard to the EX4000-8P switch

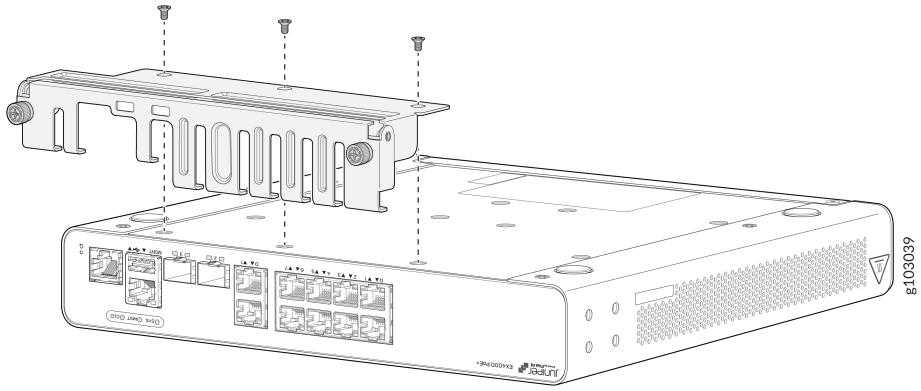

Figure 91: Attaching a cable guard to the EX4000-12P, EX4000-12T, or EX4000-12MP switch

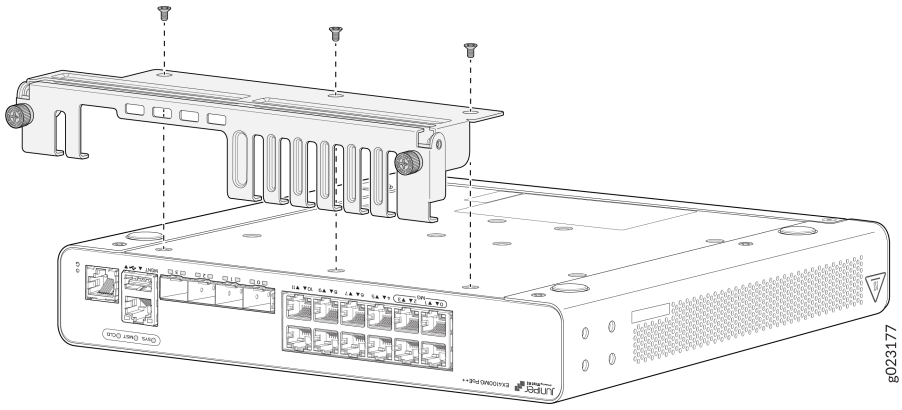

Figure 92: Cable Guard Door- Closed Position - EX4000-8P

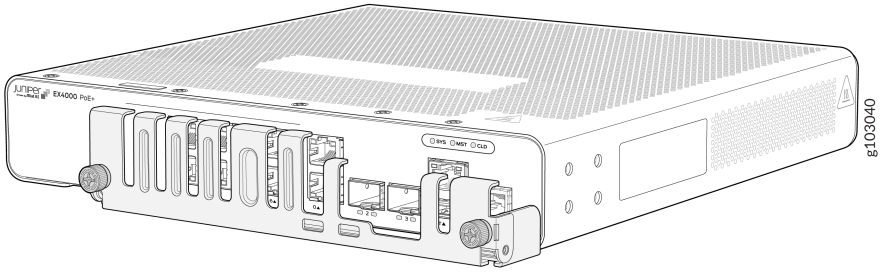

Figure 93: Cable Guard Door- Closed Position - EX4000-12P, EX4000-12T, and EX4000-12MP

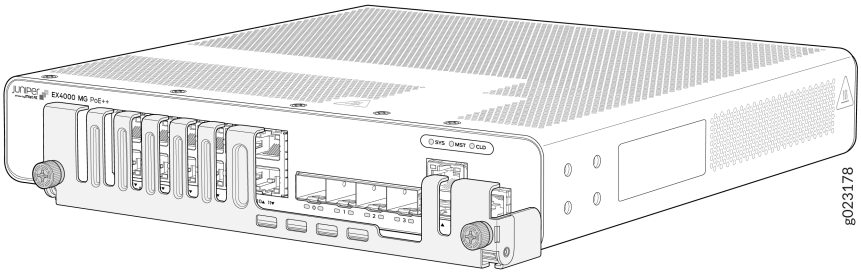

Figure 94: Cable Guard Door- Open Position - EX4000-8P

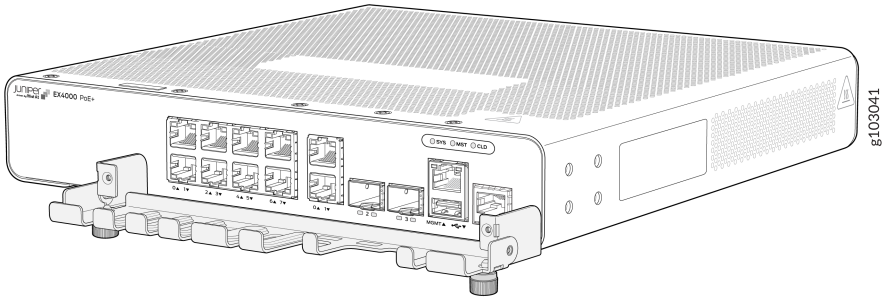

Figure 95: Cable Guard Door- Open Position - EX4000-12P, EX4000-12T, and EX4000-12MP

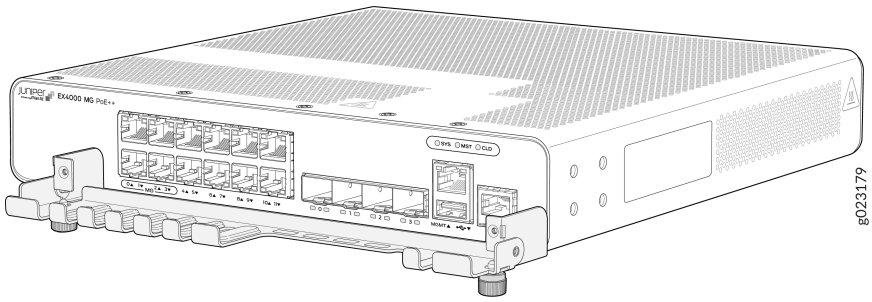

Connect the EX4000 to Power

IN THIS SECTION

- Connect Earth Ground to an EX4000 Switch | 123
- Connect AC Power to an EX4000 Switch | 128

Connect Earth Ground to an EX4000 Switch

To ensure proper operation and to meet safety and electromagnetic interference (EMI) requirements, you must connect EX4000 switch models to earth ground before you connect power to the switch. You must use the protective earthing terminal on the switch chassis to connect the switch to earth ground.

You must install the EX4000 switches in a restricted-access location and ensure that the chassis is always properly grounded. EX4000 switches have a two-hole protective grounding terminal on the rear panel of the chassis. Under all circumstances, use this grounding connection to ground the chassis. For AC-powered systems, you must also use the grounding wire in the AC power cord along with the two-hole grounding lug connection. This tested system meets or exceeds all applicable EMC regulatory requirements with the two-hole protective grounding terminal.

CAUTION: Ensure that a licensed electrician has attached the appropriate grounding lug to the grounding cable that you supply. Using a grounding cable with an incorrectly attached lug can damage the switch.

Before you connect earth ground to a EX4000 switch, ensure that you have parts and tools listed in Table 43 on page 123 available:

Table 43: Parts Required for Connecting an EX4000 Switch to Earth Ground

Item	Switch Model	Description
Earthing terminal location	EX4000 switches	Rear panel of the chassis

Table 43: Parts Required for Connecting an EX4000 Switch to Earth Ground *(Continued)*

Item	Switch Model	Description
Grounding cable requirements	EX4000 switches	Grounding cable (Yellow green): 6 AWG (13 mm^2), minimum 90° C copper stranded wire, or as permitted by the local code—not provided.
Grounding lug specifications	EX4000 switches	Panduit LCD6-14AF or equivalent—not provided
Screws to secure the grounding lug	EX4000 switches	Two M5 X 10 mm screws with washer—seperately orderable
Tools required	EX4000 switches	Number 2 Phillips (+) screwdriver—not provided Electrostatic discharge (ESD) grounding strap—not provided

NOTE:

- Grounding Lug - Customers can order Ground lug kit, JNP-GL-2H6-M5-RA (or equivalent lug and screws)
- The ground lug kit JNP-GL-2H6-M5-RA consists of:
  - One panduit lug LCD6-14AF-L
  - Two stainless steel screw with washer, M5 x 9.5

To ground the EX4000 switch to a proper ground reference:

1. Connect one end of the grounding cable to a proper earth ground, such as the rack in which the switch is mounted.
2. Place the grounding lug attached to the grounding cable over the protective earthing terminal on the rear panel.

Figure 96: Connect a Grounding Cable to an EX4000-8P Switch

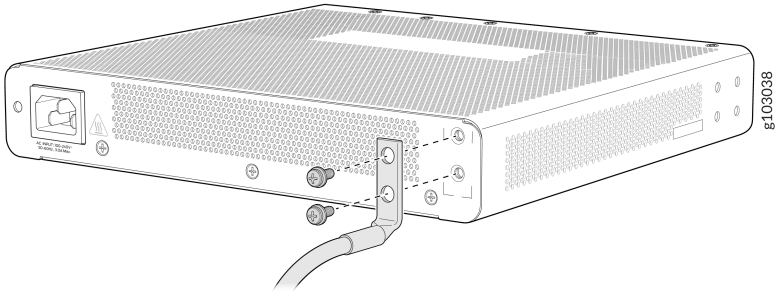

Figure 97: Connect a Grounding Cable to an EX4000-12T Switch

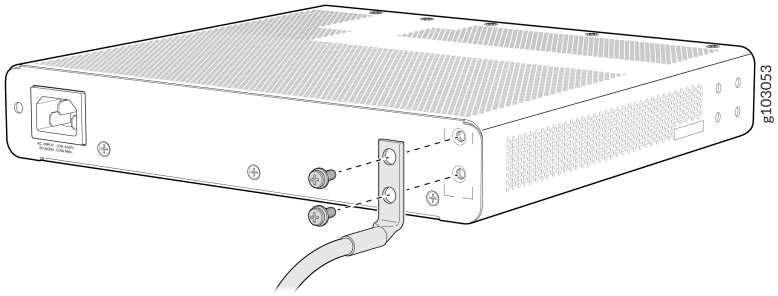

Figure 98: Connect a Grounding Cable to an EX4000-12P or EX4000-12MP Switch

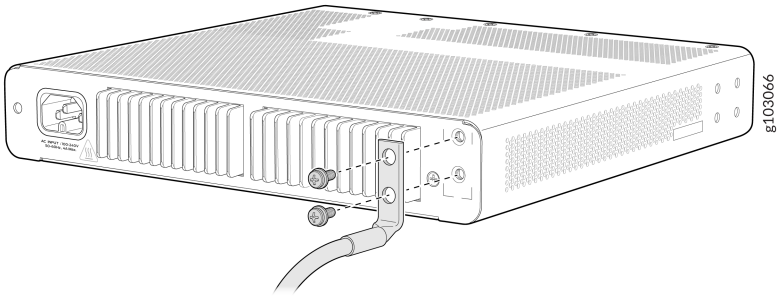

Figure 99: Connect a Grounding Cable to an EX4000-24P Switch

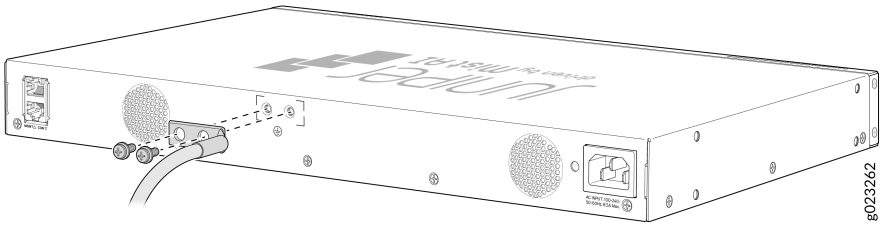

Figure 100: Connect a Grounding Cable to an EX4000-24T Switch

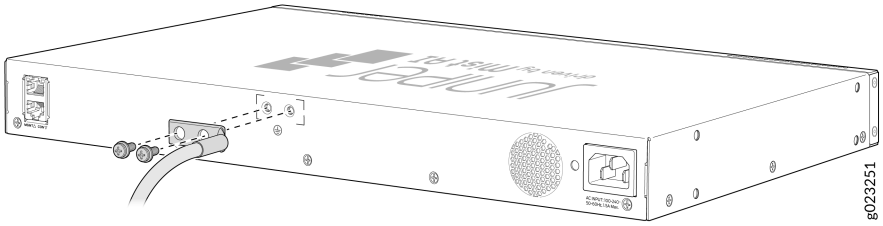

Figure 101: Connect a Grounding Cable to an EX4000-24MP Switch

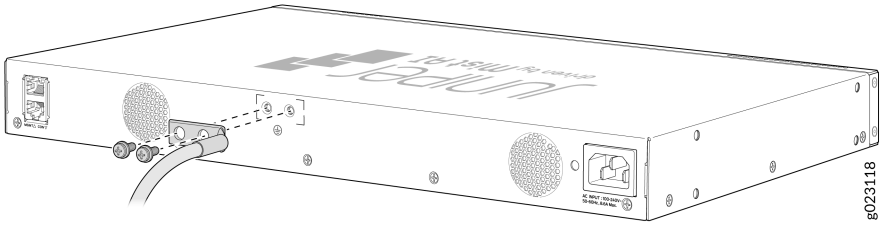

Figure 102: Connect a Grounding Cable to an EX4000-48P Switch

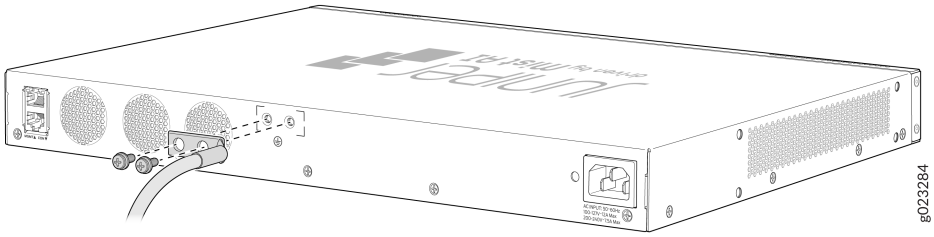

Figure 103: Connect a Grounding Cable to an EX4000-48T Switch

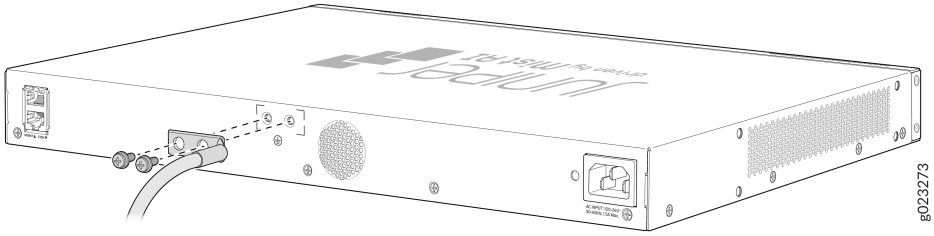

Figure 104: Connect a Grounding Cable to an EX4000-48MP Switch

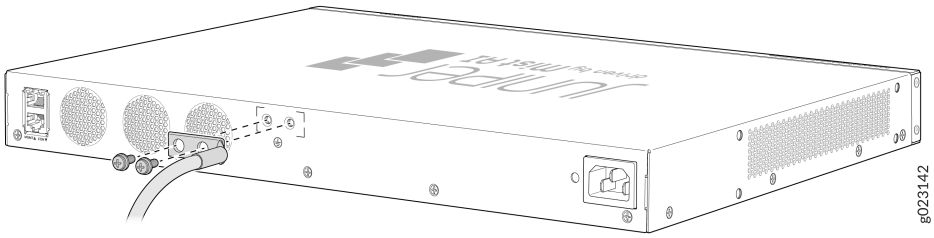

3. Secure the grounding lug to the protective earthing terminal with the screws.
4. Dress the grounding cable and ensure that it does not touch or block access to other switch components.

WARNING: Ensure that the cable does not drape where people could trip over it.

Connect AC Power to an EX4000 Switch

Before you connect AC power, ensure that you have the following parts and tools available:

- A power cord appropriate for your geographical location—provided

Ensure that you have connected the device chassis to earth ground. The AC power cords also provide additional grounding when you connect the power supply in the switch to a grounded AC power outlet by using the AC power cord appropriate for your geographical location (see AC Power Cord Specifications).

> **CAUTION**: For installations that require a separate grounding conductor to the chassis, have a licensed electrician complete this connection before you connect the switch to power. For instructions on connecting earth ground, see "Connect Earth Ground to an EX4000 Switch" on page 123.

To connect AC power to the switch:

1. If the AC power source outlet has a power switch, set it to the off position.
2. On the rear panel of the switch, insert the power cord retainer into the power cord retainer slot.

Figure 105: Insert the power cord retainer into the EX4000-8P switch

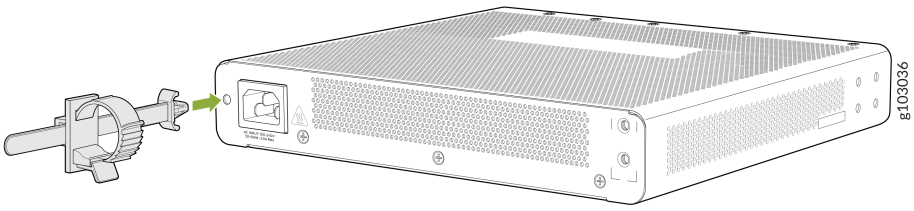

Figure 106: Insert the power cord retainer into the EX4000-12T switch

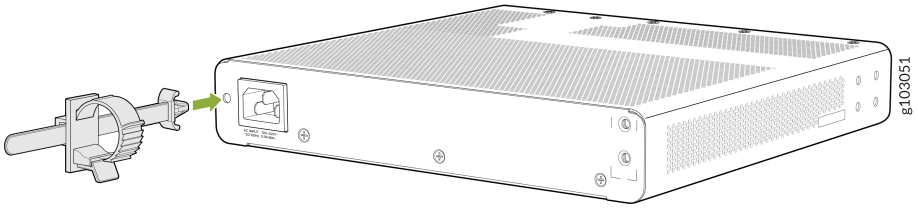

Figure 107: Insert the power cord retainer into the EX4000-12P or EX4000-12MP switch

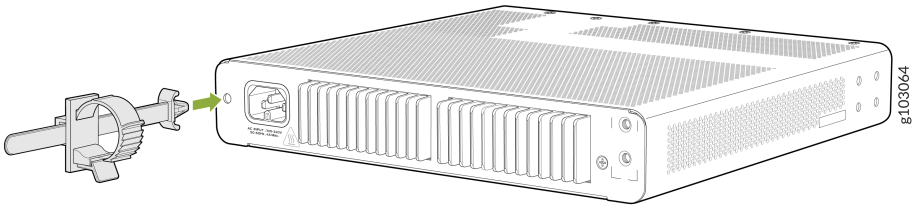

Figure 108: Insert the power cord retainer into the EX4000-24P, EX4000-24T, or EX4000-24MP switch

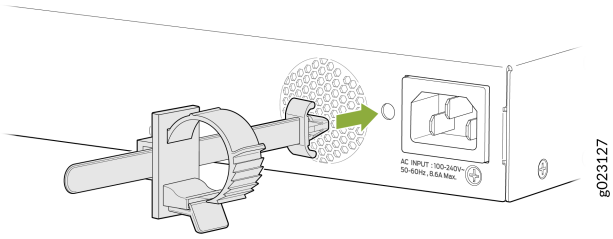

Figure 109: Insert the power cord retainer into the EX4000-48P, EX4000-48T, or EX4000-48MP switch

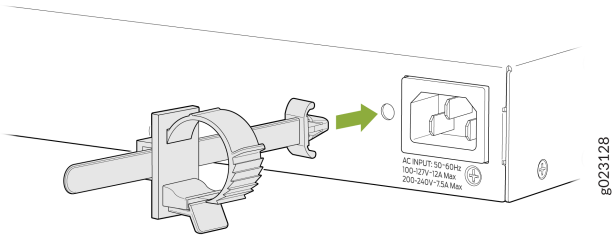

3. On the rear panel of the switch, insert the power cord plug into the power input terminal. Press the tab on the power cord retainer loop until the loop is snug against the base of the coupler.

Figure 110: Insert the AC power cord to the EX4000-8P switch

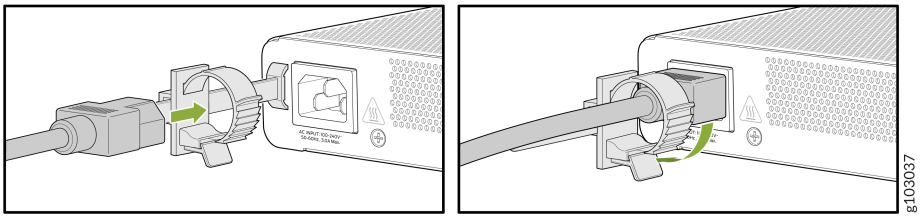

Figure 111: Insert the AC power cord to the EX4000-12T switch

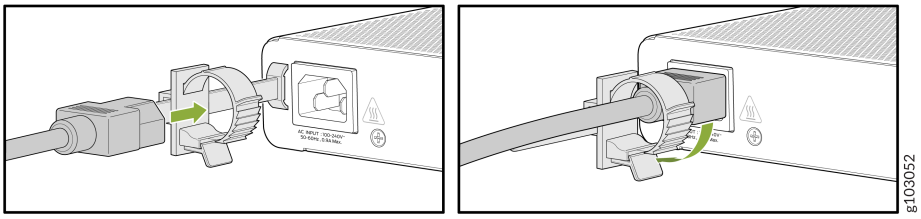

Figure 112: Insert the AC power cord to the EX4000-12P or EX4000-12MP switch

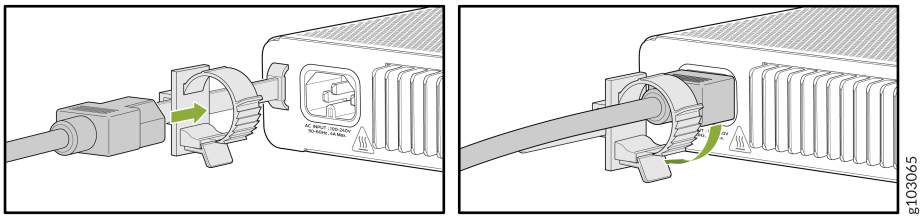

Figure 113: Insert the AC power cord to the EX4000-24P, EX4000-24T, or EX4000-24MP switch

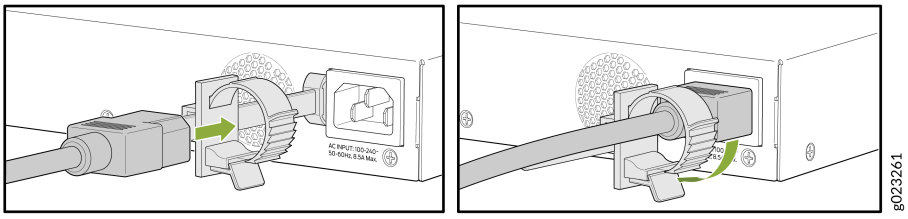

Figure 114: Insert the AC power cord to the EX4000-48P switch

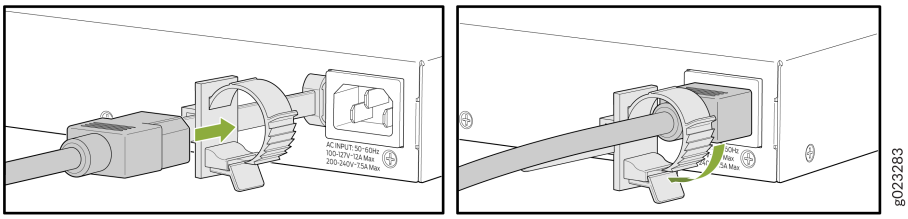

Figure 115: Insert the AC power cord to the EX4000-48T switch

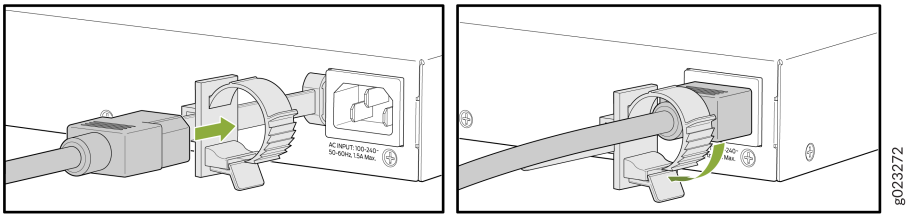

Figure 116: Insert the AC power cord to the EX4000-48MP switch

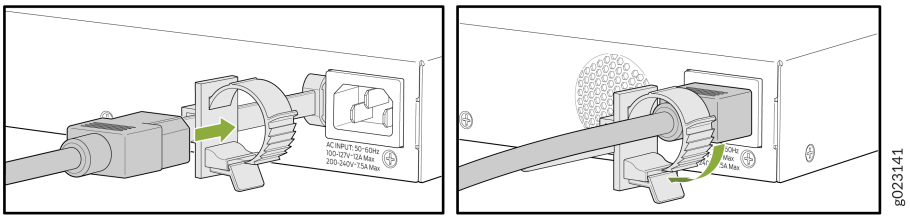

4. If the AC power source outlet has a power switch, set it to the on position.

Managing EX4000 Switches Using Juniper Mist™

IN THIS SECTION

- Configuring EX4000 Switches Using Juniper Mist | **133**
- Monitoring EX4000 Switches using Mist | **134**
- Troubleshooting EX4000 Switches with Juniper Mist | **135**

Using Juniper Mist™ Wired Assurance AI-driven cloud service is the recommended way to manage EX4000 switches. Wired Assurance combines the power of Mist cloud management with AI and is the preferred way to onboard, configure, monitor and troubleshoot EX4000 switches at scale.

Before onboarding the EX4000 switches to Mist Cloud, complete the switch onboarding prerequisites such as subscribing to Juniper Mist Wired Assurance through the Juniper Mist portal, creating an organization, setting up sites, configuring your firewall device to allow Juniper Mist traffic, setting up certificates, configuring switch administrator roles and privileges etc.

After completing the switch onboarding prerequisites, you can onboard a single EX4000 switch to Mist Cloud using the Mist AI Mobile App. If you are onboarding multiple switches, use a web browser. If you are using Juniper Mist Access Points (APs), place the EX4000 switches at these sites to ensure interoperability.

Configuring EX4000 Switches Using Juniper Mist

It is recommended to manage EX4000 Switches exclusively through the Juniper Mist Cloud and not from the device's CLI. You start off by mounting the EX4000 switches. If you have subscribed to Juniper Mist Wired Assurance you onboard the EX4000 switches to Mist Cloud, complete the switch onboarding prerequisites, and then configure the switches by creating a configuration template and apply it to your organization(s) and site(s). Switches in your organization(s) and site(s) inherit the configuration template settings. If required, you can override a switch's configuration settings individually.

Broadly, the following are the configuration settings that can be applied to your organization(s) and site(s).

Table 44: Mist Configuration Overview

All Switches configuration	Management	Shared Elements
• Radius • TACACS+ • NTP • DNS settings • SNMP • Static routes • CLI configurations • OSPF • DHCP settings • Syslog settings • Port Mirroring • Routing Policy	• Configuration Revert Timer • Root Password • Protection of Routing Engine • Local Users • Idle Timeout • Login Banner • Upgrade Junos OS • Create Recovery Snapshot for a Switch • Replace a Switch	• Networks • Port Profiles • Dynamic Port Configuration • VRF



NOTE:

- You can also apply rule-based configuration settings to switches.
- You can apply switch-specific settings manually or in bulk that override the site/template settings.
- You can issue `set` commands through the Mist portal to apply CLI configurations. You can also delete CLI configurations by using `delete` commands.

Monitoring EX4000 Switches using Mist

Mist provides various ways to monitor EX4000 Switches. You can view switch metrics and switch details, troubleshoot and test the switch, and view details of connected clients to the switches. The monitoring capabilities are summarized in the following table.

Table 45: Monitoring Options with Mist

Switch metrics	Switch details	Switch utilities	Wired Service Level Expectation
• Switch-AP affinity • PoE compliance • VLANs indicator • Junos version compliance • Switch uptime	• Port status and configuration • Clients or APs connected to each port • Switch insights	• Testing tools—Ping, Traceroute, Cable Test, Bounce Port • Remote CLI access • Reboot switch • Send Switch Log to Mist • Upgrade Firmware • Create a switch configuration template • Snapshot Device • Download Junos Configuration • Replace Switch	• Classifiers for successful user experiences • Classifiers for unsuccessful user experiences • Classifiers for successful switch health parameters • Classifiers for unsuccessful switch health parameters • Classifiers for successful switch bandwidth parameters • Classifiers for unsuccessful switch bandwidth parameters

Troubleshooting EX4000 Switches with Juniper Mist

Juniper Mist provides various capabilities to troubleshoot EX4000 switches.

Assessing network health with wired SLEs dashboard

Juniper Mist cloud continuously collects network telemetry data and uses machine learning to analyze the end-user experience. You can access this information through the Juniper Mist wired service-level expectation (SLE) dashboards, which help you assess the network's user experience and resolve any issues proactively. The SLE dashboards present information by way of classifiers for metrics such as user experiences, switch health, and switch bandwidth.

Using Marvis® Virtual Network Assistant to proactively resolve issues

Marvis Virtual Network Assistant is an AI-driven, interactive virtual network assistant that streamlines network operations, simplifies troubleshooting, and provides an enhanced user experience. With real-time network visibility, Marvis provides a comprehensive view of your network from an organizational level to a client level with detailed insights. Marvis leverages the Mist AI to identify issues proactively and provide recommendations to fix issues.

Troubleshooting Switches showing as disconnected on the Juniper Mist portal

If a switch shows as disconnected when it is online and reachable locally, you can troubleshoot the issue. You need console access or SSH access to the switch to perform the troubleshooting steps.

Troubleshooting switch to Juniper Mist Cloud connectivity with CloudX

Juniper CloudX, integrated natively into Junos OS, is an advanced architecture that ensures faster and secure communication between Juniper switches and the Mist cloud. It is responsible for creating a secure connection between the switch and the Mist cloud. CloudX-enabled switches can be monitored and managed by cloud services. You can check:

- If a switch communicates with Mist cloud using CloudX by running some CLI commands on the switch.
- If CloudX is running on the switch through the Juniper Mist portal
- If CloudX is enabled on multiple switches by using the Juniper Mist portal
- If Mist Cloud Daemon (mcd) and Junos Mist Daemon (jmd) are running. mcd is responsible for enabling communication between the switch and the cloud. It maintains a secure WebSocket connection to the terminator in the cloud. jmd is used for:
  - Generating periodic statistics for the device
  - Applying device configuration
  - Gathering device events
  - Initiating device functions (such as packet capture and software updates)
  - Returning results from requested functions (such as files and streamed data)

RELATED DOCUMENTATION

Juniper Mist Wired Assurance Configuration Guide

Register Products—Mandatory to Validate SLAs

Juniper Networks auto registers newly purchased products based on the end customer information provided at the point of sale. Registering products and changes to products activates your hardware replacement service-level agreements (SLAs).

CAUTION: Update the installation base data if any installation base data is added or changed or if the installation base is moved. Juniper Networks is not responsible for customers not meeting the hardware replacement service-level agreement (SLA) for products that do not have registered serial numbers or accurate installation base data.

To know more about how to register your product and update your installation base, see Juniper Networks Product Registration and Install Base Management.

Configure Junos OS on an EX4000 Switch

IN THIS SECTION

- EX4000 Default Configuration | **137**
- Connect and Configure an EX4000 Switch | **148**
- Revert to the Default Factory Configuration on an EX Series Switch | **154**

EX4000 Default Configuration

Each EX Series switch is programmed with a factory default configuration that contains the values set for each configuration parameter when the switch is shipped. The default configuration file sets values for system parameters such as `syslog` and `commit`, configures Ethernet switching on all interfaces, enables IGMP snooping, and enables the LLDP and RSTP protocols.

NOTE:

- The factory default configuration file has more interfaces for models that have more ports.
- The `poe` statement does not appear for models without PoE+ ports.
- You can use to ignore management link alarm as part of factory default configuration.
- `set chassis alarm management-ethernet link-down ignore` stanza is present by default under factory default configuration to ignore management link alarm. If required, you can delete this configuration to be notified for management link alarm.

When you commit changes to the configuration, a new configuration file is created. This file becomes the active configuration. You can always revert to the factory-default configuration. See "Revert to the Default Factory Configuration on an EX Series Switch" on page 154.

The following is the factory-default configuration file for an EX4000-48MP switch:

```
system {
    commit {
        factory-settings {
            reset-chassis-lcd-menu;
        }
    }
    services {
        netconf {
            ssh;
            rfc-compliant;
            yang-compliant;
        }
        ssh;
    }
    auto-snapshot;
    phone-home {
        server https://redirect.juniper.net;
        rfc-compliant;
    }
}
chassis {
    redundancy {
```

```
        graceful-switchover;
    }
}
alarm {
    management-ethernet {
        link-down ignore;
    }
}
interfaces {
    mge-0/0/0 {
        unit 0 {
            family ethernet-switching {
                storm-control default;
            }
        }
    }
    mge-0/0/1 {
        unit 0 {
            family ethernet-switching {
                storm-control default;
            }
        }
    }
    mge-0/0/2 {
        unit 0 {
            family ethernet-switching {
                storm-control default;
            }
        }
    }
    mge-0/0/3 {
        unit 0 {
            family ethernet-switching {
                storm-control default;
            }
        }
    }
    mge-0/0/4 {
        unit 0 {
            family ethernet-switching {
                storm-control default;
            }
        }
```

```
    }
    mge-0/0/5 {
        unit 0 {
            family ethernet-switching {
                storm-control default;
            }
        }
    }
    mge-0/0/6 {
        unit 0 {
            family ethernet-switching {
                storm-control default;
            }
        }
    }
    mge-0/0/7 {
        unit 0 {
            family ethernet-switching {
                storm-control default;
            }
        }
    }
    ge-0/0/8 {
        unit 0 {
            family ethernet-switching {
                storm-control default;
            }
        }
    }
    ge-0/0/9 {
        unit 0 {
            family ethernet-switching {
                storm-control default;
            }
        }
    }
    ge-0/0/10 {
        unit 0 {
            family ethernet-switching {
                storm-control default;
            }
        }
    }
```

```
    ge-0/0/11 {
        unit 0 {
            family ethernet-switching {
                storm-control default;
            }
        }
    }
    ge-0/0/12 {
        unit 0 {
            family ethernet-switching {
                storm-control default;
            }
        }
    }
    ge-0/0/13 {
        unit 0 {
            family ethernet-switching {
                storm-control default;
            }
        }
    }
    ge-0/0/14 {
        unit 0 {
            family ethernet-switching {
                storm-control default;
            }
        }
    }
    ge-0/0/15 {
        unit 0 {
            family ethernet-switching {
                storm-control default;
            }
        }
    }
    ge-0/0/16 {
        unit 0 {
            family ethernet-switching {
                storm-control default;
            }
        }
    }
    ge-0/0/17 {
```

```
        unit 0 {
            family ethernet-switching {
                storm-control default;
            }
        }
    }
    ge-0/0/18 {
        unit 0 {
            family ethernet-switching {
                storm-control default;
            }
        }
    }
    ge-0/0/19 {
        unit 0 {
            family ethernet-switching {
                storm-control default;
            }
        }
    }
    ge-0/0/20 {
        unit 0 {
            family ethernet-switching {
                storm-control default;
            }
        }
    }
    ge-0/0/21 {
        unit 0 {
            family ethernet-switching {
                storm-control default;
            }
        }
    }
    ge-0/0/22 {
        unit 0 {
            family ethernet-switching {
                storm-control default;
            }
        }
    }
    ge-0/0/23 {
        unit 0 {
```

```
            family ethernet-switching {
                storm-control default;
            }
        }
    }
    ge-0/0/24 {
        unit 0 {
            family ethernet-switching {
                storm-control default;
            }
        }
    }
    ge-0/0/25 {
        unit 0 {
            family ethernet-switching {
                storm-control default;
            }
        }
    }
    ge-0/0/26 {
        unit 0 {
            family ethernet-switching {
                storm-control default;
            }
        }
    }
    ge-0/0/27 {
        unit 0 {
            family ethernet-switching {
                storm-control default;
            }
        }
    }
    ge-0/0/28 {
        unit 0 {
            family ethernet-switching {
                storm-control default;
            }
        }
    }
    ge-0/0/29 {
        unit 0 {
            family ethernet-switching {
```

```
            storm-control default;
        }
    }
}
ge-0/0/30 {
    unit 0 {
        family ethernet-switching {
            storm-control default;
        }
    }
}
ge-0/0/31 {
    unit 0 {
        family ethernet-switching {
            storm-control default;
        }
    }
}
ge-0/0/32 {
    unit 0 {
        family ethernet-switching {
            storm-control default;
        }
    }
}
ge-0/0/33 {
    unit 0 {
        family ethernet-switching {
            storm-control default;
        }
    }
}
ge-0/0/34 {
    unit 0 {
        family ethernet-switching {
            storm-control default;
        }
    }
}
ge-0/0/35 {
    unit 0 {
        family ethernet-switching {
            storm-control default;
```

```
        }
    }
}
ge-0/0/36 {
    unit 0 {
        family ethernet-switching {
            storm-control default;
        }
    }
}
ge-0/0/37 {
    unit 0 {
        family ethernet-switching {
            storm-control default;
        }
    }
}
ge-0/0/38 {
    unit 0 {
        family ethernet-switching {
            storm-control default;
        }
    }
}
ge-0/0/39 {
    unit 0 {
        family ethernet-switching {
            storm-control default;
        }
    }
}
ge-0/0/40 {
    unit 0 {
        family ethernet-switching {
            storm-control default;
        }
    }
}
ge-0/0/41 {
    unit 0 {
        family ethernet-switching {
            storm-control default;
        }
```

```
        }
    }
    ge-0/0/42 {
        unit 0 {
            family ethernet-switching {
                storm-control default;
            }
        }
    }
    ge-0/0/43 {
        unit 0 {
            family ethernet-switching {
                storm-control default;
            }
        }
    }
    ge-0/0/44 {
        unit 0 {
            family ethernet-switching {
                storm-control default;
            }
        }
    }
    ge-0/0/45 {
        unit 0 {
            family ethernet-switching {
                storm-control default;
            }
        }
    }
    ge-0/0/46 {
        unit 0 {
            family ethernet-switching {
                storm-control default;
            }
        }
    }
    ge-0/0/47 {
        unit 0 {
            family ethernet-switching {
                storm-control default;
            }
        }
```

```
    }
    xe-0/1/2 {
        unit 0 {
            family ethernet-switching {
                storm-control default;
            }
        }
    }
    ge-0/1/2 {
        unit 0 {
            family ethernet-switching {
                storm-control default;
            }
        }
    }
    xe-0/1/3 {
        unit 0 {
            family ethernet-switching {
                storm-control default;
            }
        }
    }
    ge-0/1/3 {
        unit 0 {
            family ethernet-switching {
                storm-control default;
            }
        }
    }
    irb {
        unit 0 {
            family inet {
                dhcp;
            }
        }
    }
    vme {
        unit 0 {
            family inet {
                dhcp;
            }
        }
    }
```

```
}
forwarding-options {
    storm-control-profiles default {
        all;
    }
}
protocols {
    lldp {
        interface all;
    }
    lldp-med {
        interface all;
    }
    igmp-snooping {
        vlan default;
    }
    rstp {
        interface all;
    }
}
poe {
    interface all;
}
vlans {
    default {
        vlan-id 1;
        l3-interface irb.0;
    }
}
```

Connect and Configure an EX4000 Switch

Before you connect and configure an EX4000 switch, set the following parameter values on the console server or PC:

- Baud Rate—9600
- Data—8
- Flow Control—None

- Parity—None
- Stop Bits—1
- DCD State—Disregard

Ensure that you have the following parts and tools available:

- An Ethernet cable with an RJ-45 connector attached (not provided)
- An RJ-45 to DB-9 serial port adapter (not provided)
- A laptop or PC, with a serial port (not provided)

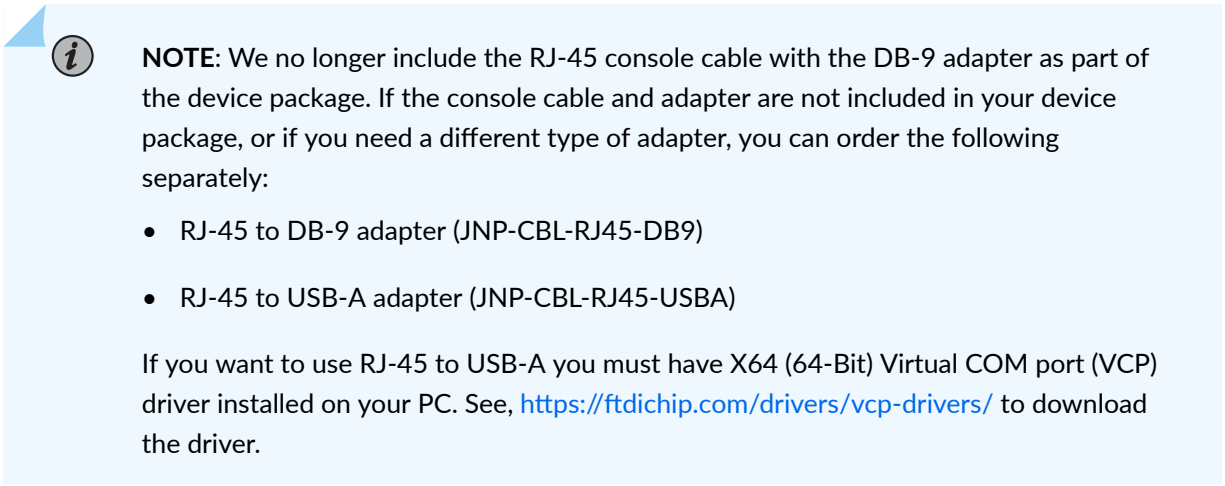

NOTE: We no longer include the RJ-45 console cable with the DB-9 adapter as part of the device package. If the console cable and adapter are not included in your device package, or if you need a different type of adapter, you can order the following separately:

- RJ-45 to DB-9 adapter (JNP-CBL-RJ45-DB9)
- RJ-45 to USB-A adapter (JNP-CBL-RJ45-USBA)

If you want to use RJ-45 to USB-A you must have X64 (64-Bit) Virtual COM port (VCP) driver installed on your PC. See, https://ftdichip.com/drivers/vcp-drivers/ to download the driver.

Have the following information available before you configure custom settings for the switch:

- Root password
- IP address of the default gateway
- IP address of the management port
- IP address of a DNS server
- (Optional) Hostname
- (Optional) IP address of a backup router
- (Optional) SNMP read community, location, and contact to configure SNMP parameters
- (Optional) Static routes to remote subnets with access to the management port
- (Optional) Static routes to remote prefixes with access to the management port

An EX4000 switch is shipped with Junos OS preinstalled and ready to be configured when the switch is powered on. You must perform the initial configuration of the switch through the console port (labeled **CON**) on the rear panel of the switch by using the CLI.

This procedure describes how to perform the initial configuration on the switch and connect it to the network. For complete information about enabling the switch to forward traffic, including examples, see the Junos OS configuration guides.

To perform the initial configuration on the switch and connect it to the network:

1. Power the switch on.
2. Connect the console port (labeled **CON**) on the rear panel of the switch to a management host such as a laptop or PC by using an RJ-45-to-DB-9 serial port adapter.
3. At the Junos OS login prompt, type **root** to log in. You don't need to enter a password. If the software booted before you connected the console port, you might need to press the Enter key for the prompt to appear.

```
login: root
```

4. Start the CLI.

```
root@:RE:0% cli
root>
```

5. Enter configuration mode.

```
root> configure
[edit]
root#
```

6. Add a password to the root administration user account. Enter a clear-text password, an encrypted password, or an SSH public key string.

```
[edit]
root# set system root-authentication plain-text-password
New password: password
Retype new password: password
```

or

```
[edit]
root# set system root-authentication encrypted-password encrypted-password
```

or

```
[edit]
root# set system root-authentication ssh-ecdsa public-key
```

or

```
[edit]
root# set system root-authentication ssh-ed25519 public-key
```

or

```
[edit]
root# set system root-authentication ssh-rsa public-key
```

7. (Optional) Configure the hostname of the switch. If the name includes spaces, enclose the name in double quotation marks (“ ”).

```
[edit]
root# set system host-name host-name
```

8. (Optional) Create a user account.

```
[edit]
root# set system login user user-name authentication plain-text-password
New password: password
Retype new password: password
```

9. (Optional) Set the user account class to super-user.

```
[edit]
root# set system login user user-name class super-user
```

10. (Optional) Configure the domain name of the switch.

```
[edit]
root# set system domain-name domain-name
```

11. Configure the default gateway.

```
[edit]
root# set routing-options static route 0/0 next-hop address
```

12. Configure the IP address and prefix length for the management interface on the switch.

```
[edit]
root# set interfaces vme unit 0 family inet address  address/prefix-length
```



NOTE: The management port `vme` (labeled **MGMT**) is located on the rear panel of the switch.

13. (Optional) Configure the IP address of a backup router, which is used only while the routing protocol is not running.

```
[edit]
root# set system backup-router address
```

14. Configure the IP address of a DNS server.

```
[edit]
root# set system name-server address
```

15. (Optional) Configure the static routes to remote subnets with access to the management port. Access to the management port is limited to the local subnet.

```
[edit]
root# set routing-options static route remote-subnet next-hop destination-IP retain no-
readvertise
```

16. (Optional) Configure the static routes to remote prefixes with access to the management port.

```
[edit]
root# set routing-options static route remote-prefix next-hop destination-IP retain no-
readvertise
```

17. Configure the SSH service.

```
[edit]
root# set system services ssh root-login allow
```

18. Configure in-band management or out-of-band management:
    - With in-band management, you can configure a network port interface as the management interface and connect it to the management device. In this scenario, you can do either of the following:
        - Use the automatically created VLAN named *default* for management of all data interfaces as members of the default VLAN. Specify the management IP address and the default gateway.
        - Create a new management VLAN. Specify the VLAN name, VLAN ID, management IP address, and default gateway. Select the ports that must be part of this VLAN.
    - With out-of-band management, you use a dedicated management channel (**MGMT**, **C0**, or **C1** port) to connect to the management device. Specify the IP address and gateway of the management interface. Use this IP address to connect to the switch.
19. (Optional) Specify the SNMP read community, location, and contact to configure SNMP parameters.
20. (Optional) Specify the system date and time. Select the time zone from the list. The configured parameters are displayed.
21. Enter **yes** to commit the configuration. The configuration is committed as the active configuration for the switch.
22. (Optional) Configure additional properties by adding the necessary configuration statements.
23. Commit the configuration to activate it on the switch.

```
[edit]
root# commit
```

24. When you have finished configuring the switch, exit configuration mode.

```
[edit]
root@switch# exit
root@switch>
```

You can now log in by using the CLI and continue configuring the switch.

Revert to the Default Factory Configuration on an EX Series Switch

IN THIS SECTION

- Revert to the EX Series Switch Factory-Default Configuration Using the `request system zeroize` Command | **155**
- Revert to the EX Series Switch Factory-Default Configuration Using the `load factory-default` Command | **156**
- Revert to the EX Series Switch Factory-Default Configuration or Zeroize the Switch Using Pin Hole Reset Button | **156**

With EX Series switches, if for any reason the current active configuration fails, you can revert to the factory-default configuration.

You can also roll back to a previous configuration, as described in Rolling Back Junos OS Configuration Changes, or revert to the rescue configuration, as described in Reverting to the Rescue Configuration for the EX Series Switch.

NOTE: Rescue configuration not saved alarm will not be reported on EX4000 switches.

TIP: If you have lost the root password, it is not necessary to revert to the factory-default configuration to reset it. See Recovering the Root Password on Switches.

The factory-default configuration contains the basic configuration settings for the switch. This is the first configuration of the switch and is loaded when the switch is first powered on. For the factory-default configuration file for your switch, see the hardware documentation for your switch.

You can revert to the factory-default configuration by using the `request system zeroize` operational command or the `load factory-default` configuration command to revert to the factory-default configuration file that contains all default settings.

These procedures are described in the following sections:

Revert to the EX Series Switch Factory-Default Configuration Using the `request system zeroize` Command

The `request system zeroize` command is a standard Junos OS operational mode command that removes all configuration information and resets all key values. The operation unlinks all user-created data files, including customized configuration and log files, from their directories. The switch then reboots and reverts to the factory-default configuration.

To completely erase user-created data so that it is unrecoverable, use the `request system zeroize media` command.



CAUTION: Before issuing `request system zeroize`, use the `request system snapshot` command to back up the files currently used to run the switch to a secondary device. Using the zeroize command will destroy Junos and OAM partitions, and the switch may not boot. To recover from a failed software installation, see Recovering from a Failed Software Installation.

To revert to the factory-default configuration by using the `request system zeroize` command:

1.
```
user@switch>request system zeroize warning: System will be rebooted and may not boot without
configuration
Erase all data, including configuration and log files?. In case of Dual RE system, both
Routing Engines will be zeroized [yes,no] (no)
```

2. Type `yes` to remove configuration and log files and revert to the factory-default configuration.



NOTE: The `auto-image-upgrade` statement is added under the `[edit chassis]` hierarchy level when you use this procedure. The automatic image upgrade feature is then available on the switch.

Revert to the EX Series Switch Factory-Default Configuration Using the `load factory-default` Command

The `load factory-default` command is a standard Junos OS configuration command that replaces the current active configuration with the factory-default configuration except the root password setting. By default, the root password is not set; you must set it to commit the new configuration in this procedure.

To revert to the factory-default configuration by using the `load factory-default` command:



NOTE: If you use this procedure, you must delete the system commit factory settings, set the root password, and commit the configuration. These steps are not required when you revert to the factory-default configuration by using `request system zeroize`. Also, the `auto-image-upgrade` statement is not added to the configuration when you use this procedure; it *is* added to the configuration when you use `request system zeroize`.

1. [edit] user@switch# `load factory-default`
2. [edit] user@switch# `delete system commit factory-settings`
3. [edit] user@switch# `set system root-authentication plain-text-password`
4. [edit] user@switch# `commit`

Revert to the EX Series Switch Factory-Default Configuration or Zeroize the Switch Using Pin Hole Reset Button

You can use the Pin Hole Reset button on the front panel of a EX4000 switch to revert the switch to factory default configuration or zeroize the switch.

To revert the switch to factory default configuration or zeroize the switch:

1. To revert the switch to factory default configuration - press the Pin Hole Reset button for more than 5 seconds and less than 10 seconds and release it to trigger the factory reset.

   On the console screen, factory reset messages are displayed. Additional indication is provided by the SYS LED which turns blue for few seconds and then the color is restored depending on the status of switch.
2. To zeroize the switch - press the Pin Hole Reset button for more than 10 seconds and release it to trigger zeroize.

   SYS Led turns purple to indicate zeroize is triggered and once the switch reboots as part of zeroize process, SYS Led will start blinking to indicate the same. After the operation, the color of SYS LED is restored depending on the status of the switch.

RELATED DOCUMENTATION

Connecting and Configuring an EX Series Switch (CLI Procedure)

Understanding Configuration Files

5

CHAPTER

Troubleshoot Hardware

IN THIS CHAPTER

- Troubleshoot Alarm Conditions of EX4000 | **159**

Troubleshoot Alarm Conditions of EX4000

IN THIS SECTION

- Chassis Component Alarm Conditions on EX4000 Switches | 159
- Troubleshoot Temperature Alarms in EX Series Switches | 161

Chassis Component Alarm Conditions on EX4000 Switches

This topic describes the chassis component alarm conditions on EX4000 switches.

Table 46 on page 159 lists the alarms that the chassis components can generate on EX4000 switches. The table lists the severity levels of these alarms and the actions that you can take to respond to them.

Table 46: Chassis Component Alarm Conditions on EX4000 Switches

Chassis Component	Alarm Condition	Alarm Severity	Remedy
Temperature	The temperature inside the chassis reached the yellow or amber alarm limit.	Minor	• Check the fan and chassis environment cooling condition. • Open a support case using the Case Manager link at https://www.juniper.net/support/, or call 1-888-314-5822 (toll-free within the United States and Canada) or 1-408-745-9500 (from outside the United States).

Table 46: Chassis Component Alarm Conditions on EX4000 Switches *(Continued)*

Chassis Component	Alarm Condition	Alarm Severity	Remedy
	The temperature inside the chassis reached the red alarm limit.	Major	• Check the fan and chassis environment cooling condition. • Open a support case using the Case Manager link at https://www.juniper.net/support/, or call 1-888-314-5822 (toll-free within the United States and Canada) or 1-408-745-9500 (from outside the United States).
Management Ethernet interface	The Management Ethernet link is down.	Major	• Check whether a cable is connected to the Management Ethernet interface or whether the cable is defective. Replace the cable, if required. • If you are unable to resolve the problem, open a support case using the Case Manager link at https://www.juniper.net/support/, or call 1-888-314-5822 (toll-free within the United States and Canada) or 1-408-745-9500 (from outside the United States).
Routing Engine	The **/var** partition usage is high.	Minor	Clean up the system file storage space on the switch. For more information, see Freeing Up System Storage Space.
	The **/var** partition is full.	Major	Clean up the system file storage space on the switch. For more information, see Freeing Up System Storage Space.

Table 46: Chassis Component Alarm Conditions on EX4000 Switches *(Continued)*

Chassis Component	Alarm Condition	Alarm Severity	Remedy
	The feature usage requires a license, or the license for the feature usage has expired. **NOTE**: If alarm ignore is not present then only this alarm should be reported. Under factory default condition, this alarm will be ignored	Minor	Install the required license for the feature specified in the alarm. For more information, see Understanding Software Licenses for EX Series Switches.

Troubleshoot Temperature Alarms in EX Series Switches

IN THIS SECTION

- Problem | 161
- Cause | 162
- Solution | 162

NOTE: This topic is a generic one and applies to all EX Series Switches. There could be variations in output depending on the switch.

Problem

Description

EX Series switches trigger a temperature alarm `FPC 0 EX-PFE1 Temp Too Hot` when the switch temperature becomes too hot.

Cause

Temperature sensors in the chassis monitor the temperature of the chassis. The switch triggers an alarm if a fan fails or if the temperature of the chassis exceeds permissible levels for some other reason.

Solution

When the switch triggers a temperature alarm such as the `FPC 0 EX-PFE1 Temp Too Hot` alarm, use the `show chassis environment` and the `show chassis temperature-thresholds` commands to identify the condition that triggered the alarm.

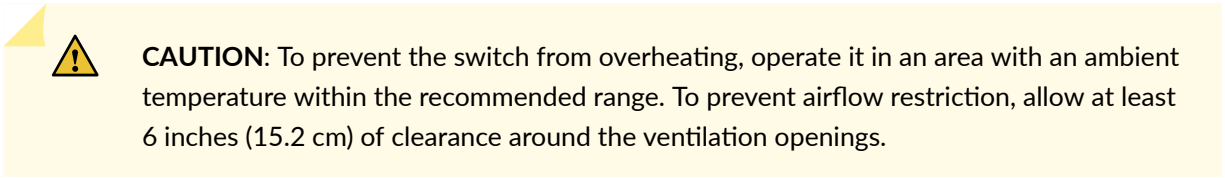

CAUTION: To prevent the switch from overheating, operate it in an area with an ambient temperature within the recommended range. To prevent airflow restriction, allow at least 6 inches (15.2 cm) of clearance around the ventilation openings.

1. Connect to the switch by using Telnet, and issue the `show chassis environment` command. This command displays environmental information about the switch chassis, including the temperature. The command also displays information about the fans, power supplies, and Routing Engines. Following is a sample output on an EX4000 switch.

```
user@switch> show chassis environment

Class Item                           Status     Measurement
Power FPC 0 Power Supply 0           OK
Temp  FPC 0 Thermal board Sensor 1   OK         38 degrees C / 100 degrees F
      FPC 0 Thermal board Sensor 2   OK         28 degrees C / 82 degrees F
      FPC 0 Thermal board Sensor 3   OK         27 degrees C / 80 degrees F
      FPC 0 PFE Die Sensor           OK         38 degrees C / 100 degrees F
      FPC 0 PoE Controller Sensor 1  OK         22 degrees C / 71 degrees F
      FPC 0 PoE Controller Sensor 2  OK         30 degrees C / 86 degrees F
      FPC 0 PoE Controller Sensor 3  OK         23 degrees C / 73 degrees F
      FPC 0 PoE Controller Sensor 4  OK         27 degrees C / 80 degrees F
      FPC 0 PoE Controller Sensor 5  OK         22 degrees C / 71 degrees F
      FPC 0 PoE Controller Sensor 6  OK         28 degrees C / 82 degrees F
      FPC 0 PoE Controller Sensor 7  OK         26 degrees C / 78 degrees F
      FPC 0 PoE Controller Sensor 8  OK         26 degrees C / 78 degrees F
```

```
      FPC 0 PoE Controller Sensor 9  OK          25 degrees C / 77 degrees F
      FPC 0 PoE Controller Sensor 10 OK          27 degrees C / 80 degrees F
      FPC 0 PoE Controller Sensor 11 OK          27 degrees C / 80 degrees F
      FPC 0 PoE Controller Sensor 12 OK          23 degrees C / 73 degrees F
Fans  FPC 0 Fan Tray 0 Fan 0         OK          Spinning at normal speed
      FPC 0 Fan Tray 1 Fan 0         OK          Spinning at normal speed
      FPC 0 Fan Tray 2 Fan 0         OK          Spinning at normal speed
```

Table 47 on page 163 lists the output fields for the `show chassis environment` command. The table lists output fields in the approximate order in which they appear.

Table 47: `show chassis environment` Output Fields

Field Name	Field Description
`Class`	Information about the category or class of chassis component: • `Temp`: Temperature of air flowing through the chassis in degrees Celsius (°C) and degrees Fahrenheit (°F) • `Fans`: Information about the status of fans and blowers
`Item`	Information about the chassis components: • Flexible PIC Concentrators (FPCs)—the line cards • Control Boards (CBs)—Thermal Board Sensor, PFE Die Sensor, PoE Controller Sensor • Power supply units • Fan Tray
`Status`	Status of the specified chassis component. For example, if `Class` is `Fans`, the fan status can be: • `OK`: The fans are operational. • `Testing`: The fans are being tested during initial power-on. • `Failed`: The fans have failed or the fans are not spinning. • `Absent`: The fan tray is not installed.

Table 47: `show chassis environment` Output Fields *(Continued)*

Field Name	Field Description
`Measurement`	Depends on the Class. For example, if `Class` is `Temp`, indicates the temperature in degrees Celsius (°C) and degrees Fahrenheit (°F). If the `Class` is `Fans`, indicates actual fan RPM.

2. Issue the command `show chassis temperature-thresholds` . This command displays the chassis temperature threshold settings. The following is a sample output on an EX4000 switch.

```
user@ host> show chassis temperature-thresholds

                                    Fan speed      Yellow alarm      Red alarm      Fire
Shutdown
                                   (degrees C)     (degrees C)     (degrees C)
(degrees C)
Item                              Normal  High   Normal  Bad fan   Normal  Bad fan
Normal
FPC 0 Thermal board Sensor 1          40    59       70       70       75
75         80
FPC 0 Thermal board Sensor 2          45    65       70       70       75
75         80
FPC 0 Thermal board Sensor 3          33    52       60       60       65
65         70
FPC 0 PFE Die Sensor                  75    99      100      100      105      105
110
FPC 0 PoE Controller Sensor 1         45    70      115      115      120      120
125
FPC 0 PoE Controller Sensor 2         45    70      115      115      120      120
125
FPC 0 PoE Controller Sensor 3         45    70      115      115      120      120
125
FPC 0 PoE Controller Sensor 4         45    70      115      115      120      120
125
FPC 0 PoE Controller Sensor 5         45    70      115      115      120      120
125
FPC 0 PoE Controller Sensor 6         45    70      115      115      120      120
125
FPC 0 PoE Controller Sensor 7         45    70      115      115      120      120
125
FPC 0 PoE Controller Sensor 8         45    70      115      115      120      120
```

```
125
FPC 0 PoE Controller Sensor 9            45    70      115      115      120      120
125
FPC 0 PoE Controller Sensor 10           45    70      115      115      120      120
125
FPC 0 PoE Controller Sensor 11           45    70      115      115      120      120
125
FPC 0 PoE Controller Sensor 12           45    70      115      115      120      120
125
```

Table 48 on page 165lists the output fields for the `show chassis temperature-thresholds` command. The table lists output fields in the approximate order in which they appear.

Table 48: `show chassis temperature-thresholds` Output Fields

Field Name	Field Description
Item	Chassis component. Displays temperature threshold information for the chassis components.
Fan speed	Temperature thresholds, in degrees Celsius, for the fans to operate at normal and at high speed. • **Normal**—The temperature threshold at which the fans operate at normal speed and when all the fans are present and functioning normally. • **High**—The temperature threshold at which the fans operate at high speed or when a fan has failed or is missing. **NOTE**: An alarm is triggered when the temperature exceeds the threshold settings for a yellow, amber, or red alarm.
Yellow or amber alarm	Temperature threshold, in degrees Celsius, that triggers a yellow or amber alarm. • **Normal**—The temperature threshold that must be exceeded on the device to trigger a yellow or amber alarm when the fans are running at full speed. • **Bad fan**—The temperature threshold that must be exceeded on the device to trigger a yellow or amber alarm when one or more fans have failed or are missing.

Table 48: `show chassis temperature-thresholds` Output Fields *(Continued)*

Field Name	Field Description
Red alarm	Temperature threshold, in degrees Celsius, that triggers a red alarm. • **Normal**—The temperature threshold that must be exceeded on the device to trigger a red alarm when the fans are running at full speed. • **Bad fan**—The temperature threshold that must be exceeded on the device to trigger a red alarm when one or more fans have failed or are missing.
Fire shutdown	Temperature threshold, in degrees Celsius, at which the switch shuts down to prevent overheating of chassis and a potential fire incident.

When a temperature alarm is triggered, you can identify the condition that triggered it by running the `show chassis environment` command to display the chassis temperature values for each component and comparing those with the temperature threshold values. You can display the temperature threshold values by running the `show chassis temperature-thresholds` command.

Table 49 on page 166 lists the possible causes for the switch to generate a temperature alarm. It also lists the respective remedies.

Table 49: Causes and Remedies for Temperature Alarms

Cause	Remedy
Ambient temperature is above threshold temperature.	Ensure that the ambient temperature is within the threshold temperature limit. See *Environmental Requirements and Specifications for EX Series Switches*.
Fan module or fan tray has failed.	Perform the following steps: 1. Check the fan. 2. If the above two checks show no problems, open a support case using the Case Manager link at https://www.juniper.net/support/ or call 1-888-314-5822 (toll-free within the United States and Canada) or 1-408-745-9500 (from outside the United States).

Table 49: Causes and Remedies for Temperature Alarms *(Continued)*

Cause	Remedy
Restricted airflow through the switch due to insufficient clearance around the installed switch.	Ensure that there is sufficient clearance around the installed switch.

CHAPTER 6

Contact Customer Support and Return the Chassis or Components

IN THIS CHAPTER

- Contacting Customer Support | **169**
- Return an EX4000 Chassis or Component | **170**

Contacting Customer Support

IN THIS SECTION

- Global Support | 169
- Support for Third-Party Transceivers | 170

You can contact the Juniper Networks Technical Assistance Center (JTAC) 24 hours a day, seven days a week.

Global Support

Chat	Use the Ask me icon at the bottom right of the Support page to request support 24 hours a day, seven days a week. Don't see the Chat icon? Read this.
Web	Juniper Support Portal Juniper Government Support Portal
Phone	US & Canada (Toll-free): 1-888-314-5822 Outside the US or Canada, use the relevant country number listed on the regional tabs listed on the Contact Support page. Federal Government Support: 1-833-900-1454.

NOTE: We do not support opening new cases via email. Please use one of the above options to contact Global Support.

Support for Third-Party Transceivers

The Juniper Networks Technical Assistance Center (JTAC) provides complete support for Juniper-supplied optical modules and cables. However, JTAC does not provide support for third-party optical modules and cables that are not qualified or supplied by Juniper Networks. If you face a problem running a Juniper device that uses third-party optical modules or cables, JTAC may help you diagnose host-related issues if the observed issue is not, in the opinion of JTAC, related to the use of the third-party optical modules or cables. Your JTAC engineer will likely request that you check the third-party optical module or cable and, if required, replace it with an equivalent Juniper-qualified component.

Use of third-party optical modules with high-power consumption (for example, coherent ZR or ZR+) can potentially cause thermal damage to or reduce the lifespan of the host equipment. Any damage to the host equipment due to the use of third-party optical modules or cables is the users' responsibility. Juniper Networks will accept no liability for any damage caused due to such use.

Return an EX4000 Chassis or Component

IN THIS SECTION

- How to Return an EX4000 Switch for Repair or Replacement | **170**
- Locate the Serial Number on an EX4000 Switch | **171**
- Contact Customer Support to Obtain a Return Material Authorization | **176**
- Pack an EX4000 Switch or Component for Shipping | **177**

How to Return an EX4000 Switch for Repair or Replacement

If you need to return a switch or hardware component to Juniper Networks for repair or replacement, follow this procedure:

1. Determine the serial number of the chassis if you need to return the switch. If you need to return one or more components, determine the serial number for each component. For instructions, see "Locate the Serial Number on an EX4000 Switch" on page 171.

2. Obtain a Return Material Authorization (RMA) number from the Juniper Networks Technical Assistance Center (JTAC) as described in Contact Customer Support to Obtain Return Material Authorization.

   NOTE: Obtain an RMA number before you return any component to Juniper Networks. Juniper Networks reserves the right to refuse shipments that lack an RMA. Refused shipments are returned to the customer through collect freight, meaning that you pay for the returned delivery.

3. Pack the switch or component for shipping as described in "Pack an EX4000 Switch or Component for Shipping" on page 177.

For more information about return and repair policies, see the customer support page at https://www.juniper.net/support/guidelines.html.

Locate the Serial Number on an EX4000 Switch

IN THIS SECTION

- List the Switch Details with the CLI | **172**
- Locate the Chassis Serial Number ID Label on an EX4000 Switch | **176**

If you are returning a switch or hardware component to Juniper Networks for repair or replacement, you must locate the serial number of the switch or component. You must provide the serial number to the Juniper Networks Technical Assistance Center (JTAC) to obtain a Return Material Authorization (RMA) number.

If the switch is operational and you can access the CLI, you can list serial numbers for the switch and for some components with a CLI command.

You can also find the serial number ID label on the physical switch or component. This option is helpful in either of these instances:

- You do not have access to the CLI.
- The serial number does not appear in the command output.



NOTE: If you want to find the serial number on the physical switch component, you will need to remove the component from the switch chassis.

List the Switch Details with the CLI

To list the switch and switch components and their serial numbers, enter the CLI command `show chassis hardware extensive`.

The following output lists the switch components and serial numbers for an EX4000 switch.

```
show chassis hardware extensive
Hardware inventory:
Item             Version  Part number  Serial number     Description
Chassis                                XO2345BV8888      EX4000-48MP
 Jedec Code:   0x0000            EEPROM Version:    0x00
                                 S/N:               XO2345BV8888
 Assembly ID:  0xf000            Assembly Version:  00.00
 Date:         01-01-1970        Assembly Flags:    0x00
 Board Information Record:
  Address 0x00: 00 00 00 00 00 00 00 00 00 00 00 00 00 00 00 00
 I2C Hex Data:
  Address 0x00: 00 00 00 00 f0 00 00 00 00 00 00 00 00 00 00 00
  Address 0x10: 00 00 00 00 00 00 00 00 00 00 00 00 00 00 00 00
  Address 0x20: 47 57 31 37 32 34 41 56 30 30 32 36 00 00 00 00
  Address 0x30: 00 00 00 00 00 00 00 00 00 00 00 00 00 00 00 00
  Address 0x40: 00 00 00 00 00 00 00 00 00 00 00 00 00 00 00 00
  Address 0x50: 00 00 00 00 00 00 00 00 00 00 00 00 00 00 00 00
  Address 0x60: 00 00 00 00 00 00 00 00 00 00 00 00 00 00 00 00
  Address 0x70: 00 00 00 00 00 00 00 00 00 00 00 00 00 00 00 00
Pseudo CB 0
Routing Engine 0          BUILTIN      BUILTIN           RE-EX4000-48MP
 Jedec Code:   0x7fb0            EEPROM Version:    0x02
 P/N:          BUILTIN           S/N:               BUILTIN
 Assembly ID:  0xf010            Assembly Version:  01.02
 Date:         05-16-2024        Assembly Flags:    0x00
                                 CLEI Code:         DUMMY_CLEI
                                 FRU Model Number:  EX4000-48MP
 Board Information Record:
  Address 0x00: ad 01 00 80 48 5a 0d ec 9f 80 ff ff ff ff ff ff
 I2C Hex Data:
  Address 0x00: 7f b0 02 fe f0 10 01 02 00 00 00 00 00 00 00 00
```

```
  Address 0x10: 00 00 00 00 42 55 49 4c 54 49 4e 00 00 00 00 00
  Address 0x20: 42 55 49 4c 54 49 4e 00 00 00 00 00 00 10 05 07
  Address 0x30: e8 ff ff ff ad 01 00 80 48 5a 0d ec 9f 80 ff ff
  Address 0x40: ff ff ff ff 01 44 55 4d 4d 59 5f 43 4c 45 49 45
  Address 0x50: 58 34 30 30 30 2d 34 38 4d 50 00 00 00 00 00 00
  Address 0x60: 00 00 00 00 00 00 31 00 00 ff ff ff ff ff ff ff
  Address 0x70: ff ff ff c7 47 57 31 37 32 34 41 56 30 30 32 36
  mmcsd0  9936 MB  MMCHC               1ED3AABE          eMMC Disk
  usb0 (addr 0.1) XHCI root HUB 0      Generic           uhub0
FPC 0            REV 01   650-178021   XO2345BV8888      EX4000-48MP
 Jedec Code:   0x7fb0            EEPROM Version:    0x02
 P/N:          650-178021        S/N:               XO2345BV8888
 Assembly ID:  0x0f15            Assembly Version:  01.02
 Date:         05-16-2024        Assembly Flags:    0x00
 Version:      REV 01            CLEI Code:         DUMMY_CLEI
 ID: EX4000-48MP                 FRU Model Number:  EX4000-48MP
 Board Information Record:
  Address 0x00: ad 01 00 80 48 5a 0d ec 9f 80 ff ff ff ff ff ff
 I2C Hex Data:
  Address 0x00: 7f b0 02 fe 0f 15 01 02 52 45 56 20 30 31 00 00
  Address 0x10: 00 00 00 00 36 35 30 2d 31 37 38 30 32 31 00 00
  Address 0x20: 47 57 31 37 32 34 41 56 30 30 32 36 00 10 05 07
  Address 0x30: e8 ff ff ff ad 01 00 80 48 5a 0d ec 9f 80 ff ff
  Address 0x40: ff ff ff ff 01 44 55 4d 4d 59 5f 43 4c 45 49 45
  Address 0x50: 58 34 30 30 30 2d 34 38 4d 50 00 00 00 00 00 00
  Address 0x60: 00 00 00 00 00 00 31 00 00 ff ff ff ff ff ff ff
  Address 0x70: ff ff ff c7 47 57 31 37 32 34 41 56 30 30 32 36
  CPU                    BUILTIN      BUILTIN           FPC CPU
 Jedec Code:   0x7fb0            EEPROM Version:    0x02
 P/N:          BUILTIN           S/N:               BUILTIN
 Assembly ID:  0xf020            Assembly Version:  01.02
 Date:         05-16-2024        Assembly Flags:    0x00
 Board Information Record:
  Address 0x00: ad 01 00 80 48 5a 0d ec 9f 80 ff ff ff ff ff ff
 I2C Hex Data:
  Address 0x00: 7f b0 02 fe f0 20 01 02 00 45 56 20 30 31 00 00
  Address 0x10: 00 00 00 00 42 55 49 4c 54 49 4e 00 32 31 00 00
  Address 0x20: 42 55 49 4c 54 49 4e 00 30 30 32 36 00 10 05 07
  Address 0x30: e8 ff ff ff ad 01 00 80 48 5a 0d ec 9f 80 ff ff
  Address 0x40: ff ff ff ff 00 44 55 4d 4d 59 5f 43 4c 45 49 45
  Address 0x50: 58 34 30 30 30 2d 34 38 4d 50 00 00 00 00 00 00
  Address 0x60: 00 00 00 00 00 00 31 00 00 ff ff ff ff ff ff ff
  Address 0x70: ff ff ff c7 47 57 31 37 32 34 41 56 30 30 32 36
```

```
  PIC 0          REV 01   BUILTIN      BUILTIN           8x100M/1G/2.5G Base-T & 40x10M/100M/1G
Base-T
 Jedec Code:   0x7fb0            EEPROM Version:    0x02
 P/N:          BUILTIN           S/N:               BUILTIN
 Assembly ID:  0xf050            Assembly Version:  01.02
 Date:         05-16-2024        Assembly Flags:    0x00
 Version:      REV 01            CLEI Code:         DUMMY_CLEI
                                 FRU Model Number:  EX4000-48MP
 Board Information Record:
  Address 0x00: ad 01 00 80 48 5a 0d ec 9f 80 ff ff ff ff ff ff
 I2C Hex Data:
  Address 0x00: 7f b0 02 fe f0 50 01 02 52 45 56 20 30 31 00 00
  Address 0x10: 00 00 00 00 42 55 49 4c 54 49 4e 00 32 31 00 00
  Address 0x20: 42 55 49 4c 54 49 4e 00 30 30 32 36 00 10 05 07
  Address 0x30: e8 ff ff ff ad 01 00 80 48 5a 0d ec 9f 80 ff ff
  Address 0x40: ff ff ff ff 01 44 55 4d 4d 59 5f 43 4c 45 49 45
  Address 0x50: 58 34 30 30 30 2d 34 38 4d 50 00 00 00 00 00 00
  Address 0x60: 00 00 00 00 00 00 31 00 00 ff ff ff ff ff ff ff
  Address 0x70: ff ff ff c7 55 55 55 55 55 55 55 55 55 55 55 55
  PIC 1          REV 01   140-148901   XO2345BV8888      4x1G/10G SFP/SFP+
 Jedec Code:   0x7fb0            EEPROM Version:    0x02
 P/N:          140-148901        S/N:               XO2345BV8888
 Assembly ID:  0xf051            Assembly Version:  01.02
 Date:         05-16-2024        Assembly Flags:    0x00
 Version:      REV 01            CLEI Code:         DUMMY_CLEI
                                 FRU Model Number:  EX4000-48MP
 Board Information Record:
  Address 0x00: ad 01 00 80 48 5a 0d ec 9f 80 ff ff ff ff ff ff
 I2C Hex Data:
  Address 0x00: 7f b0 02 fe f0 51 01 02 52 45 56 20 30 31 00 00
  Address 0x10: 00 00 00 00 36 35 30 2d 31 37 38 30 32 31 00 00
  Address 0x20: 47 57 31 37 32 34 41 56 30 30 32 36 00 10 05 07
  Address 0x30: e8 ff ff ff ad 01 00 80 48 5a 0d ec 9f 80 ff ff
  Address 0x40: ff ff ff ff 01 44 55 4d 4d 59 5f 43 4c 45 49 45
  Address 0x50: 58 34 30 30 30 2d 34 38 4d 50 00 00 00 00 00 00
  Address 0x60: 00 00 00 00 00 00 31 00 00 ff ff ff ff ff ff ff
  Address 0x70: ff ff ff c7 55 55 55 55 55 55 55 55 55 55 55 55
    Xcvr 2       REV 01   740-030076   UJP09819910ERH    SFP+-10G-CU1M
Power Supply 0            BUILTIN      BUILTIN           JPSU-1200W-AC
 Jedec Code:   0x7fb0            EEPROM Version:    0x00
 P/N:          BUILTIN           S/N:               BUILTIN
 Assembly ID:  0xf030            Assembly Version:  00.00
 Date:         01-01-1970        Assembly Flags:    0x00
```

```
 Board Information Record:
  Address 0x00: 00 00 00 00 00 00 00 00 00 00 00 00 00 00 00 00
 I2C Hex Data:
  Address 0x00: 7f b0 00 00 f0 30 00 00 00 00 00 00 00 00 00 00
  Address 0x10: 00 00 00 00 42 55 49 4c 54 49 4e 00 00 00 00 00
  Address 0x20: 42 55 49 4c 54 49 4e 00 00 00 00 00 00 00 00 00
  Address 0x30: 00 00 00 00 00 00 00 00 00 00 00 00 00 00 00 00
  Address 0x40: 00 00 00 00 00 00 00 00 00 00 00 00 00 00 00 00
  Address 0x50: 00 00 00 00 00 00 00 00 00 00 00 00 00 00 00 00
  Address 0x60: 00 00 00 00 00 00 00 00 00 00 00 00 00 00 00 00
  Address 0x70: 00 00 00 00 00 00 00 00 00 00 00 00 00 00 00 00
Fan Tray 0                                          Fan Module, Airflow Out (AFO)
 Jedec Code:   0x7fb0           EEPROM Version:    0x00
 Assembly ID:  0xf040           Assembly Version:  00.00
 Date:         01-01-1970       Assembly Flags:    0x00
 Board Information Record:
  Address 0x00: 00 00 00 00 00 00 00 00 00 00 00 00 00 00 00 00
 I2C Hex Data:
  Address 0x00: 7f b0 00 00 f0 40 00 00 00 00 00 00 00 00 00 00
  Address 0x10: 00 00 00 00 00 00 00 00 00 00 00 00 00 00 00 00
  Address 0x20: 00 00 00 00 00 00 00 00 00 00 00 00 00 00 00 00
  Address 0x30: 00 00 00 00 00 00 00 00 00 00 00 00 00 00 00 00
  Address 0x40: 00 00 00 00 00 00 00 00 00 00 00 00 00 00 00 00
  Address 0x50: 00 00 00 00 00 00 00 00 00 00 00 00 00 00 00 00
  Address 0x60: 00 00 00 00 00 00 00 00 00 00 00 00 00 00 00 00
  Address 0x70: 00 00 00 00 00 00 00 00 00 00 00 00 00 00 00 00
Fan Tray 1                                          Fan Module, Airflow Out (AFO)
 Jedec Code:   0x7fb0           EEPROM Version:    0x00
 Assembly ID:  0xf040           Assembly Version:  00.00
 Date:         01-01-1970       Assembly Flags:    0x00
 Board Information Record:
  Address 0x00: 00 00 00 00 00 00 00 00 00 00 00 00 00 00 00 00
 I2C Hex Data:
  Address 0x00: 7f b0 00 00 f0 40 00 00 00 00 00 00 00 00 00 00
  Address 0x10: 00 00 00 00 00 00 00 00 00 00 00 00 00 00 00 00
  Address 0x20: 00 00 00 00 00 00 00 00 00 00 00 00 00 00 00 00
  Address 0x30: 00 00 00 00 00 00 00 00 00 00 00 00 00 00 00 00
  Address 0x40: 00 00 00 00 00 00 00 00 00 00 00 00 00 00 00 00
  Address 0x50: 00 00 00 00 00 00 00 00 00 00 00 00 00 00 00 00
  Address 0x60: 00 00 00 00 00 00 00 00 00 00 00 00 00 00 00 00
  Address 0x70: 00 00 00 00 00 00 00 00 00 00 00 00 00 00 00 00
Fan Tray 2                                          Fan Module, Airflow Out (AFO)
 Jedec Code:   0x7fb0           EEPROM Version:    0x00
```

```
Assembly ID:  0xf040            Assembly Version:  00.00
Date:         01-01-1970        Assembly Flags:    0x00
Board Information Record:
 Address 0x00: 00 00 00 00 00 00 00 00 00 00 00 00 00 00 00 00
I2C Hex Data:
 Address 0x00: 7f b0 00 00 f0 40 00 00 00 00 00 00 00 00 00 00
 Address 0x10: 00 00 00 00 00 00 00 00 00 00 00 00 00 00 00 00
 Address 0x20: 00 00 00 00 00 00 00 00 00 00 00 00 00 00 00 00
 Address 0x30: 00 00 00 00 00 00 00 00 00 00 00 00 00 00 00 00
 Address 0x40: 00 00 00 00 00 00 00 00 00 00 00 00 00 00 00 00
 Address 0x50: 00 00 00 00 00 00 00 00 00 00 00 00 00 00 00 00
 Address 0x60: 00 00 00 00 00 00 00 00 00 00 00 00 00 00 00 00
 Address 0x70: 00 00 00 00 00 00 00 00 00 00 00 00 00 00 00 00
```

For information about the `show chassis hardware` command, see show chassis hardware.

Locate the Chassis Serial Number ID Label on an EX4000 Switch

As indicated by the following figures, locate the serial number ID label of an EX4000 chassis.

Figure 117: Location of the Serial Number ID Label on EX4000 Switches

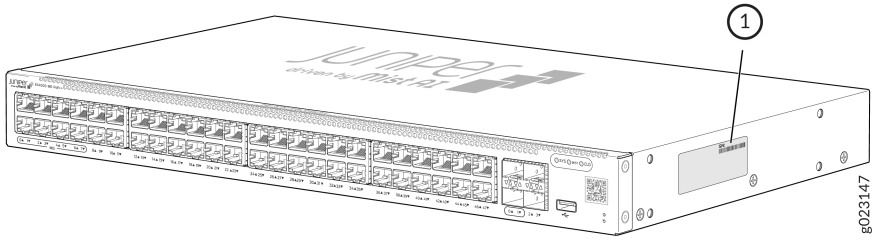

1– Serial Number ID Label

Contact Customer Support to Obtain a Return Material Authorization

If you need to return a device or hardware component to Juniper Networks for repair or replacement, obtain an RMA number from JTAC. You must obtain an RMA number before you attempt to return the component.

After locating the serial number of the device or hardware component you want to return, open a service request with the JTAC on the Web or by telephone.

Before you request an RMA number from JTAC, be prepared to provide the following information:

- Your existing service request number, if you have one
- Serial number of the component
- Your name, organization name, telephone number, fax number, and shipping address
- Details of the failure or problem
- Type of activity being performed on the device when the problem occurred
- Configuration data displayed by one or more `show` commands

You can contact JTAC 24 hours a day, seven days a week, on the Web or by telephone:

- Service Request Manager: https://support.juniper.net/support
- Telephone: +1-888-314-JTAC (+1-888-314-5822), toll free in U.S., Canada, and Mexico



NOTE: For international or direct-dial options in countries without toll free numbers, see https://support.juniper.net/support.

If you are contacting JTAC by telephone, enter your 12-digit service request number followed by the pound (#) key for an existing case, or press the star (*) key to be routed to the next available support engineer.

The support representative validates your request and issues an RMA number for return of the component.

Pack an EX4000 Switch or Component for Shipping

IN THIS SECTION

- Pack an EX4000 Switch for Shipping | **178**
- Pack EX4000 Switch Components for Shipping | **179**

If you are returning the switch or component to Juniper Networks for repair or replacement, pack the item as described in this topic.

Before you pack the switch or component, ensure that you have:

- Followed all the steps listed in Contact Customer Support to Obtain a Return Material Authorization.
- Retrieved the original shipping carton and packing materials. Contact your JTAC representative if you do not have these materials, to learn about approved packing materials (see Contact Customer Support to Obtain a Return Material Authorization).
- Ensure that you understand how to prevent electrostatic discharge (ESD) damage (see "Prevention of Electrostatic Discharge Damage" on page 207).

Pack an EX4000 Switch for Shipping

Before you pack the switch:

1. On the console or other management device connected to the switch, enter the CLI operational mode and issue the following command to shut down the switch software:

   ```
   user@switch> request system halt
   ```

   Wait until a message appears on the console confirming that the operating system has halted.
2. Disconnect power from the switch.
3. Remove the cables that connect the switch to external devices.
4. Remove all optical transceivers installed in the switch (see Remove a Transceiver).

If you need to transport the switch to another location or return the switch to Juniper Networks, you need to pack the switch securely in its original packaging to prevent damage during shipping.

Ensure that you have the following parts and tools:

- Number 2 Phillips (+) screwdriver—not provided
- The original switch packing material (cardboard box, accessory box and its contents, and foam padding)
- An ESD grounding strap—not provided
- Antistatic bag—not provided



CAUTION: Do not pack the switch in anything except its original container, or the switch might be damaged in transit.

To pack the switch:

1. If the switch is installed in a rack or cabinet, have one person support the weight of the switch while another person unscrews and removes the mounting screws.
2. Remove the switch from the rack or cabinet and place the switch on a flat, stable surface.
3. Use the screwdriver to remove the rack mounting brackets from the switch chassis.
4. Place the switch in an antistatic bag.
5. Place the bottom portion of the packaging foam in the shipping carton.
6. Place the switch inside the cavity in the bottom packaging foam.
7. Place the top portion of the packaging foam on top of the switch.
8. If you are returning accessories or field-replaceable units (FRUs) with the switch, pack them as instructed in "Pack EX4000 Switch Components for Shipping" on page 179.
9. Place the accessory box by the rear end of the chassis in the shipping carton.
10. Close the top of the cardboard shipping box and seal it with packing tape.
11. Write the RMA number on the exterior of the box to ensure proper tracking.

Pack EX4000 Switch Components for Shipping

Ensure that you have the following parts and tools available:

- Antistatic bag, one for each component—not provided
- An ESD grounding strap—not provided

To pack the switch components:



CAUTION: Do not stack switch components. Return individual components in separate boxes if they do not fit together on one level in the shipping box.

- Place individual components in antistatic bags.
- Use the original packing materials if they are available. If the original packing materials are not available, ensure the component is adequately packed to prevent damage during transit. The packing material you use must be able to support the weight of the component.
- Ensure that the components are adequately protected by wrapping them well with packing materials. Pack the component in an oversized box (if the original box is not available) with extra packing material around the unit so that the component is prevented from moving around inside the box.
- Securely tape the box closed.
- Write the RMA number on the exterior of the box to ensure proper tracking.

CHAPTER 7

Safety and Compliance Information

IN THIS CHAPTER

- Safety Information for EX4000 | **182**
- General Safety Guidelines and Warnings | **182**
- Definitions of Safety Warning Levels | **183**
- Qualified Personnel Warning | **185**
- Warning Statement for Norway and Sweden | **186**
- Fire Safety Requirements | **186**
- Installation Instructions Warning | **187**
- Chassis and Component Lifting Guidelines | **188**
- Restricted Access Warning | **189**
- Ramp Warning | **190**
- Rack-Mounting and Cabinet-Mounting Warnings | **191**
- Grounded Equipment Warning | **195**
- Radiation from Open Port Apertures Warning | **195**
- Laser and LED Safety Guidelines and Warnings | **196**
- Maintenance and Operational Safety Guidelines and Warnings | **199**
- General Electrical Safety Guidelines Warnings | **205**
- Action to Take After an Electrical Accident | **207**
- Prevention of Electrostatic Discharge Damage | **207**
- AC Power Electrical Safety Guidelines | **209**
- AC Power Disconnection Warning | **210**
- Multiple Power Supplies Disconnection Warning | **210**
- TN Power Warning | **211**

- EX Series Agency Approvals | **212**
- Compliance Statements for EMC Requirements for EX Series Switches | **214**
- Compliance Statements for Acoustic Noise for EX Series Switches | **218**
- Statements of Volatility for Juniper Network Devices | **218**

Safety Information for EX4000

The Juniper Networks Safety Guide provides general safety information and guidelines for all Juniper Networks products. Follow the guidelines provided in the guide to reduce the likelihood of personal injury, equipment damage, and damage to surrounding areas.

Along with the information provided in the Juniper Networks Safety Guide, you must read and understand the *EX4000* specific safety information provided in this hardware guide.

General Safety Guidelines and Warnings

The following guidelines help ensure your safety and protect the device from damage. The list of guidelines might not address all potentially hazardous situations in your working environment, so be alert and exercise good judgment at all times.

- Perform only the procedures explicitly described in the hardware documentation for this device. Make sure that only authorized service personnel perform other system services.
- Keep the area around the device clear and free from dust before, during, and after installation.
- Keep tools away from areas where people could trip over them while walking.
- Do not wear loose clothing or jewelry, such as rings, bracelets, or chains, which could become caught in the device.
- Wear safety glasses if you are working under any conditions that could be hazardous to your eyes.
- Do not perform any actions that create a potential hazard to people or make the equipment unsafe.
- Never attempt to lift an object that is too heavy for one person to handle.
- Never install or manipulate wiring during electrical storms.
- Never install electrical jacks in wet locations unless the jacks are specifically designed for wet environments.
- Operate the device only when it is properly grounded.
- Follow the instructions in this guide to properly ground the device to earth.
- Replace fuses only with fuses of the same type and rating.

- Do not open or remove chassis covers or sheet-metal parts unless instructions are provided in the hardware documentation for this device. Such an action could cause severe electrical shock.
- Do not push or force any objects through any opening in the chassis frame. Such an action could result in electrical shock or fire.
- Avoid spilling liquid onto the chassis or onto any device component. Such an action could cause electrical shock or damage the device.
- Avoid touching uninsulated electrical wires or terminals that have not been disconnected from their power source. Such an action could cause electrical shock.
- Some parts of the chassis, including AC and DC power supply surfaces, power supply unit handles, SFB card handles, and fan tray handles might become hot. The following label provides the warning for hot surfaces on the chassis:



- Always ensure that all modules, power supplies, and cover panels are fully inserted and that the installation screws are fully tightened.

Definitions of Safety Warning Levels

The documentation uses the following levels of safety warnings (there are two *Warning* formats):

NOTE: You might find this information helpful in a particular situation, or you might overlook this important information if it was not highlighted in a Note.

CAUTION: You need to observe the specified guidelines to prevent minor injury or discomfort to you or severe damage to the device.

Attention Veillez à respecter les consignes indiquées pour éviter toute incommodité ou blessure légère, voire des dégâts graves pour l'appareil.



LASER WARNING: This symbol alerts you to the risk of personal injury from a laser.
Avertissement Ce symbole signale un risque de blessure provoquée par rayon laser.



WARNING: This symbol means danger. You are in a situation that could cause bodily injury. Before you work on any equipment, be aware of the hazards involved with electrical circuitry, and familiarize yourself with standard practices for preventing accidents.

Waarschuwing Dit waarschuwingssymbool betekent gevaar. U verkeert in een situatie die lichamelijk letsel kan veroorzaken. Voordat u aan enige apparatuur gaat werken, dient u zich bewust te zijn van de bij elektrische schakelingen betrokken risico's en dient u op de hoogte te zijn van standaard maatregelen om ongelukken te voorkomen.

Varoitus Tämä varoitusmerkki merkitsee vaaraa. Olet tilanteessa, joka voi johtaa ruumiinvammaan. Ennen kuin työskentelet minkään laitteiston parissa, ota selvää sähkökytkentöihin liittyvistä vaaroista ja tavanomaisista onnettomuuksien ehkäisykeinoista.

Avertissement Ce symbole d'avertissement indique un danger. Vous vous trouvez dans une situation pouvant causer des blessures ou des dommages corporels. Avant de travailler sur un équipement, soyez conscient des dangers posés par les circuits électriques et familiarisez-vous avec les procédures couramment utilisées pour éviter les accidents.

Warnung Dieses Warnsymbol bedeutet Gefahr. Sie befinden sich in einer Situation, die zu einer Körperverletzung führen könnte. Bevor Sie mit der Arbeit an irgendeinem Gerät beginnen, seien Sie sich der mit elektrischen Stromkreisen verbundenen Gefahren und der Standardpraktiken zur Vermeidung von Unfällen bewußt.

Avvertenza Questo simbolo di avvertenza indica un pericolo. La situazione potrebbe causare infortuni alle persone. Prima di lavorare su qualsiasi apparecchiatura, occorre conoscere i pericoli relativi ai circuiti elettrici ed essere al corrente delle pratiche standard per la prevenzione di incidenti.

Advarsel Dette varselsymbolet betyr fare. Du befinner deg i en situasjon som kan føre til personskade. Før du utfører arbeid på utstyr, må du vare oppmerksom på de faremomentene som elektriske kretser innebærer, samt gjøre deg kjent med vanlig praksis når det gjelder å unngå ulykker.

Aviso Este símbolo de aviso indica perigo. Encontra-se numa situação que lhe poderá causar danos físicos. Antes de começar a trabalhar com qualquer equipamento,

familiarize-se com os perigos relacionados com circuitos eléctricos, e com quaisquer práticas comuns que possam prevenir possíveis acidentes.

¡Atención! Este símbolo de aviso significa peligro. Existe riesgo para su integridad física. Antes de manipular cualquier equipo, considerar los riesgos que entraña la corriente eléctrica y familiarizarse con los procedimientos estándar de prevención de accidentes.

Varning! Denna varningssymbol signalerar fara. Du befinner dig i en situation som kan leda till personskada. Innan du utför arbete på någon utrustning måste du vara medveten om farorna med elkretsar och känna till vanligt förfarande för att förebygga skador.

Qualified Personnel Warning



WARNING: Only trained and qualified personnel should install or replace the device.
Waarschuwing Installatie en reparaties mogen uitsluitend door getraind en bevoegd personeel uitgevoerd worden.

Varoitus Ainoastaan koulutettu ja pätevä henkilökunta saa asentaa tai vaihtaa tämän laitteen.

Avertissement Tout installation ou remplacement de l'appareil doit être réalisé par du personnel qualifié et compétent.

Warnung Gerät nur von geschultem, qualifiziertem Personal installieren oder auswechseln lassen.

Avvertenza Solo personale addestrato e qualificato deve essere autorizzato ad installare o sostituire questo apparecchio.

Advarsel Kun kvalifisert personell med riktig opplæring bør montere eller bytte ut dette utstyret.

Aviso Este equipamento deverá ser instalado ou substituído apenas por pessoal devidamente treinado e qualificado.

¡Atención! Estos equipos deben ser instalados y reemplazados exclusivamente por personal técnico adecuadamente preparado y capacitado.

Varning! Denna utrustning ska endast installeras och bytas ut av utbildad och kvalificerad personal.

Warning Statement for Norway and Sweden



WARNING: The equipment must be connected to an earthed mains socket-outlet.
Advarsel Apparatet skal kobles til en jordet stikkontakt.

Varning! Apparaten skall anslutas till jordat nätuttag.

Fire Safety Requirements

IN THIS SECTION

- Fire Suppression | **186**
- Fire Suppression Equipment | **187**

In the event of a fire emergency, the safety of people is the primary concern. You should establish procedures for protecting people in the event of a fire emergency, provide safety training, and properly provision fire-control equipment and fire extinguishers.

In addition, you should establish procedures to protect your equipment in the event of a fire emergency. Juniper Networks products should be installed in an environment suitable for electronic equipment. We recommend that fire suppression equipment be available in the event of a fire in the vicinity of the equipment and that all local fire, safety, and electrical codes and ordinances be observed when you install and operate your equipment.

Fire Suppression

In the event of an electrical hazard or an electrical fire, you should first turn power off to the equipment at the source. Then use a Type C fire extinguisher, which uses noncorrosive fire retardants, to extinguish the fire.

Fire Suppression Equipment

Type C fire extinguishers, which use noncorrosive fire retardants such as carbon dioxide and Halotron™, are most effective for suppressing electrical fires. Type C fire extinguishers displace oxygen from the point of combustion to eliminate the fire. For extinguishing fire on or around equipment that draws air from the environment for cooling, you should use this type of inert oxygen displacement extinguisher instead of an extinguisher that leaves residues on equipment.

Do not use multipurpose Type ABC chemical fire extinguishers (dry chemical fire extinguishers). The primary ingredient in these fire extinguishers is monoammonium phosphate, which is very sticky and difficult to clean. In addition, in the presence of minute amounts of moisture, monoammonium phosphate can become highly corrosive and corrodes most metals.

Any equipment in a room in which a chemical fire extinguisher has been discharged is subject to premature failure and unreliable operation. The equipment is considered to be irreparably damaged.

NOTE: To keep warranties effective, do not use a dry chemical fire extinguisher to control a fire at or near a Juniper Networks device. If a dry chemical fire extinguisher is used, the unit is no longer eligible for coverage under a service agreement.

We recommend that you dispose of any irreparably damaged equipment in an environmentally responsible manner.

Installation Instructions Warning

WARNING: Read the installation instructions before you connect the device to a power source.

Waarschuwing Raadpleeg de installatie-aanwijzingen voordat u het systeem met de voeding verbindt.

Varoitus Lue asennusohjeet ennen järjestelmän yhdistämistä virtalähteeseen.

Avertissement Avant de brancher le système sur la source d'alimentation, consulter les directives d'installation.

Warnung Lesen Sie die Installationsanweisungen, bevor Sie das System an die Stromquelle anschließen.

Avvertenza Consultare le istruzioni di installazione prima di collegare il sistema all'alimentatore.

Advarsel Les installasjonsinstruksjonene før systemet kobles til strømkilden.

Aviso Leia as instruções de instalação antes de ligar o sistema à sua fonte de energia.

¡Atención! Ver las instrucciones de instalación antes de conectar el sistema a la red de alimentación.

Varning! Läs installationsanvisningarna innan du kopplar systemet till dess strömförsörjningsenhet.

Chassis and Component Lifting Guidelines

- Before moving the device to a site, ensure that the site meets the power, environmental, and clearance requirements.
- Before lifting or moving the device, disconnect all external cables and wires.
- As when lifting any heavy object, ensure that your legs bear most of the weight rather than your back. Keep your knees bent and your back relatively straight. Do not twist your body as you lift. Balance the load evenly and be sure that your footing is firm.
- Use the following lifting guidelines to lift devices and components:
  - Up to 39.7 lb (18 kg): One person.
  - From 39.7 lb (18 kg) to 70.5 lb (32 kg): Two or more people.
  - From 70.5 lb (32 kg) to 121.2 lb (55 kg): Three or more people.
  - Above 121.2 lb (55 kg): Use material handling systems (such as levers, slings, lifts, and so on). When this is not practical, engage specially trained persons or systems (such as riggers or movers).

Restricted Access Warning



WARNING: This unit is intended for installation in restricted access areas. A restricted access area is an area to which access can be gained only by service personnel through the use of a special tool, lock and key, or other means of security, and which is controlled by the authority responsible for the location.

Waarschuwing Dit toestel is bedoeld voor installatie op plaatsen met beperkte toegang. Een plaats met beperkte toegang is een plaats waar toegang slechts door servicepersoneel verkregen kan worden door middel van een speciaal instrument, een slot en sleutel, of een ander veiligheidsmiddel, en welke beheerd wordt door de overheidsinstantie die verantwoordelijk is voor de locatie.

Varoitus Tämä laite on tarkoitettu asennettavaksi paikkaan, johon pääsy on rajoitettua. Paikka, johon pääsy on rajoitettua, tarkoittaa paikkaa, johon vain huoltohenkilöstö pääsee jonkin erikoistyökalun, lukkoon sopivan avaimen tai jonkin muun turvalaitteen avulla ja joka on paikasta vastuussa olevien toimivaltaisten henkilöiden valvoma.

Avertissement Cet appareil est à installer dans des zones d'accès réservé. Ces dernières sont des zones auxquelles seul le personnel de service peut accéder en utilisant un outil spécial, un mécanisme de verrouillage et une clé, ou tout autre moyen de sécurité. L'accès aux zones de sécurité est sous le contrôle de l'autorité responsable de l'emplacement.

Warnung Diese Einheit ist zur Installation in Bereichen mit beschränktem Zutritt vorgesehen. Ein Bereich mit beschränktem Zutritt ist ein Bereich, zu dem nur Wartungspersonal mit einem Spezialwerkzeugs, Schloß und Schlüssel oder anderer Sicherheitsvorkehrungen Zugang hat, und der von dem für die Anlage zuständigen Gremium kontrolliert wird.

Avvertenza Questa unità deve essere installata in un'area ad accesso limitato. Un'area ad accesso limitato è un'area accessibile solo a personale di assistenza tramite un'attrezzo speciale, lucchetto, o altri dispositivi di sicurezza, ed è controllata dall'autorità responsabile della zona.

Advarsel Denne enheten er laget for installasjon i områder med begrenset adgang. Et område med begrenset adgang gir kun adgang til servicepersonale som bruker et spesielt verktøy, lås og nøkkel, eller en annen sikkerhetsanordning, og det kontrolleres av den autoriteten som er ansvarlig for området.

Aviso Esta unidade foi concebida para instalação em áreas de acesso restrito. Uma área de acesso restrito é uma área à qual apenas tem acesso o pessoal de serviço autorizado,

que possua uma ferramenta, chave e fechadura especial, ou qualquer outra forma de segurança. Esta área é controlada pela autoridade responsável pelo local.

¡Atención! Esta unidad ha sido diseñada para instalarse en áreas de acceso restringido. Área de acceso restringido significa un área a la que solamente tiene acceso el personal de servicio mediante la utilización de una herramienta especial, cerradura con llave, o algún otro medio de seguridad, y que está bajo el control de la autoridad responsable del local.

Varning! Denna enhet är avsedd för installation i områden med begränsat tillträde. Ett område med begränsat tillträde får endast tillträdas av servicepersonal med ett speciellt verktyg, lås och nyckel, eller annan säkerhetsanordning, och kontrolleras av den auktoritet som ansvarar för området.

Ramp Warning



WARNING: When installing the device, do not use a ramp inclined at more than 10 degrees.
Waarschuwing Gebruik een oprijplaat niet onder een hoek van meer dan 10 graden.

Varoitus Älä käytä sellaista kaltevaa pintaa, jonka kaltevuus ylittää 10 astetta.

Avertissement Ne pas utiliser une rampe dont l'inclinaison est supérieure à 10 degrés.

Warnung Keine Rampen mit einer Neigung von mehr als 10 Grad verwenden.

Avvertenza Non usare una rampa con pendenza superiore a 10 gradi.

Advarsel Bruk aldri en rampe som heller mer enn 10 grader.

Aviso Não utilize uma rampa com uma inclinação superior a 10 graus.

¡Atención! No usar una rampa inclinada más de 10 grados.

Varning! Använd inte ramp med en lutning på mer än 10 grader.

Rack-Mounting and Cabinet-Mounting Warnings

Ensure that the rack or cabinet in which the device is installed is evenly and securely supported. Uneven mechanical loading could lead to a hazardous condition.



WARNING: To prevent bodily injury when mounting or servicing the device in a rack, take the following precautions to ensure that the system remains stable. The following directives help maintain your safety:

- Install the device in a rack that is secured to the building structure.
- Mount the device at the bottom of the rack if it is the only unit in the rack.
- When mounting the device on a partially filled rack, load the rack from the bottom to the top, with the heaviest component at the bottom of the rack.
- If the rack is provided with stabilizing equipment, install the stabilizers before mounting or servicing the device in the rack.

Waarschuwing Om lichamelijk letsel te voorkomen wanneer u dit toestel in een rek monteert of het daar een servicebeurt geeft, moet u speciale voorzorgsmaatregelen nemen om ervoor te zorgen dat het toestel stabiel blijft. De onderstaande richtlijnen worden verstrekt om uw veiligheid te verzekeren:

- De Juniper Networks switch moet in een stellage worden geïnstalleerd die aan een bouwsel is verankerd.
- Dit toestel dient onderaan in het rek gemonteerd te worden als het toestel het enige in het rek is.
- Wanneer u dit toestel in een gedeeltelijk gevuld rek monteert, dient u het rek van onderen naar boven te laden met het zwaarste onderdeel onderaan in het rek.
- Als het rek voorzien is van stabiliseringshulpmiddelen, dient u de stabilisatoren te monteren voordat u het toestel in het rek monteert of het daar een servicebeurt geeft.

Varoitus Kun laite asetetaan telineeseen tai huolletaan sen ollessa telineessä, on noudatettava erityisiä varotoimia järjestelmän vakavuuden säilyttämiseksi, jotta vältytään loukkaantumiselta. Noudata seuraavia turvallisuusohjeita:

- Juniper Networks switch on asennettava telineeseen, joka on kiinnitetty rakennukseen.
- Jos telineessä ei ole muita laitteita, aseta laite telineen alaosaan.
- Jos laite asetetaan osaksi täytettyyn telineeseen, aloita kuormittaminen sen alaosasta kaikkein raskaimmalla esineellä ja siirry sitten sen yläosaan.
- Jos telinettä varten on vakaimet, asenna ne ennen laitteen asettamista telineeseen tai sen huoltamista siinä.

Avertissement Pour éviter toute blessure corporelle pendant les opérations de montage ou de réparation de cette unité en casier, il convient de prendre des précautions spéciales afin de maintenir la stabilité du système. Les directives ci-dessous sont destinées à assurer la protection du personnel:

- Le rack sur lequel est monté le Juniper Networks switch doit être fixé à la structure du bâtiment.
- Si cette unité constitue la seule unité montée en casier, elle doit être placée dans le bas.
- Si cette unité est montée dans un casier partiellement rempli, charger le casier de bas en haut en plaçant l'élément le plus lourd dans le bas.
- Si le casier est équipé de dispositifs stabilisateurs, installer les stabilisateurs avant de monter ou de réparer l'unité en casier.

Warnung Zur Vermeidung von Körperverletzung beim Anbringen oder Warten dieser Einheit in einem Gestell müssen Sie besondere Vorkehrungen treffen, um sicherzustellen, daß das System stabil bleibt. Die folgenden Richtlinien sollen zur Gewährleistung Ihrer Sicherheit dienen:

- Der Juniper Networks switch muß in einem Gestell installiert werden, das in der Gebäudestruktur verankert ist.
- Wenn diese Einheit die einzige im Gestell ist, sollte sie unten im Gestell angebracht werden.
- Bei Anbringung dieser Einheit in einem zum Teil gefüllten Gestell ist das Gestell von unten nach oben zu laden, wobei das schwerste Bauteil unten im Gestell anzubringen ist.

- Wird das Gestell mit Stabilisierungszubehör geliefert, sind zuerst die Stabilisatoren zu installieren, bevor Sie die Einheit im Gestell anbringen oder sie warten.

Avvertenza Per evitare infortuni fisici durante il montaggio o la manutenzione di questa unità in un supporto, occorre osservare speciali precauzioni per garantire che il sistema rimanga stabile. Le seguenti direttive vengono fornite per garantire la sicurezza personale:

- Il Juniper Networks switch deve essere installato in un telaio, il quale deve essere fissato alla struttura dell'edificio.
- Questa unità deve venire montata sul fondo del supporto, se si tratta dell'unica unità da montare nel supporto.
- Quando questa unità viene montata in un supporto parzialmente pieno, caricare il supporto dal basso all'alto, con il componente più pesante sistemato sul fondo del supporto.
- Se il supporto è dotato di dispositivi stabilizzanti, installare tali dispositivi prima di montare o di procedere alla manutenzione dell'unità nel supporto.

Advarsel Unngå fysiske skader under montering eller reparasjonsarbeid på denne enheten når den befinner seg i et kabinett. Vær nøye med at systemet er stabilt. Følgende retningslinjer er gitt for å verne om sikkerheten:

- Juniper Networks switch må installeres i et stativ som er forankret til bygningsstrukturen.
- Denne enheten bør monteres nederst i kabinettet hvis dette er den eneste enheten i kabinettet.
- Ved montering av denne enheten i et kabinett som er delvis fylt, skal kabinettet lastes fra bunnen og opp med den tyngste komponenten nederst i kabinettet.
- Hvis kabinettet er utstyrt med stabiliseringsutstyr, skal stabilisatorene installeres før montering eller utføring av reparasjonsarbeid på enheten i kabinettet.

Aviso Para se prevenir contra danos corporais ao montar ou reparar esta unidade numa estante, deverá tomar precauções especiais para se certificar de que o sistema possui um suporte estável. As seguintes directrizes ajudá-lo-ão a efectuar o seu trabalho com segurança:

- O Juniper Networks switch deverá ser instalado numa prateleira fixa à estrutura do edificio.

- Esta unidade deverá ser montada na parte inferior da estante, caso seja esta a única unidade a ser montada.
- Ao montar esta unidade numa estante parcialmente ocupada, coloque os itens mais pesados na parte inferior da estante, arrumando-os de baixo para cima.
- Se a estante possuir um dispositivo de estabilização, instale-o antes de montar ou reparar a unidade.

¡Atención! Para evitar lesiones durante el montaje de este equipo sobre un bastidor, oeriormente durante su mantenimiento, se debe poner mucho cuidado en que el sistema quede bien estable. Para garantizar su seguridad, proceda según las siguientes instrucciones:

- El Juniper Networks switch debe instalarse en un bastidor fijado a la estructura del edificio.
- Colocar el equipo en la parte inferior del bastidor, cuando sea la única unidad en el mismo.
- Cuando este equipo se vaya a instalar en un bastidor parcialmente ocupado, comenzar la instalación desde la parte inferior hacia la superior colocando el equipo más pesado en la parte inferior.
- Si el bastidor dispone de dispositivos estabilizadores, instalar éstos antes de montar o proceder al mantenimiento del equipo instalado en el bastidor.

Varning! För att undvika kroppsskada när du installerar eller utför underhållsarbete på denna enhet på en ställning måste du vidta särskilda försiktighetsåtgärder för att försäkra dig om att systemet står stadigt. Följande riktlinjer ges för att trygga din säkerhet:

- Juniper Networks switch måste installeras i en ställning som är förankrad i byggnadens struktur.
- Om denna enhet är den enda enheten på ställningen skall den installeras längst ned på ställningen.
- Om denna enhet installeras på en delvis fylld ställning skall ställningen fyllas nedifrån och upp, med de tyngsta enheterna längst ned på ställningen.
- Om ställningen är försedd med stabiliseringsdon skall dessa monteras fast innan enheten installeras eller underhålls på ställningen.

Grounded Equipment Warning



WARNING: This device must be properly grounded at all times. Follow the instructions in this guide to properly ground the device to earth.

Waarschuwing Dit apparaat moet altijd goed geaard zijn. Volg de instructies in deze gids om het apparaat goed te aarden.

Varoitus Laitteen on oltava pysyvästi maadoitettu. Maadoita laite asianmukaisesti noudattamalla tämän oppaan ohjeita.

Avertissement L'appareil doit être correctement mis à la terre à tout moment. Suivez les instructions de ce guide pour correctement mettre l'appareil à la terre.

Warnung Das Gerät muss immer ordnungsgemäß geerdet sein. Befolgen Sie die Anweisungen in dieser Anleitung, um das Gerät ordnungsgemäß zu erden.

Avvertenza Questo dispositivo deve sempre disporre di una connessione a massa. Seguire le istruzioni indicate in questa guida per connettere correttamente il dispositivo a massa.

Advarsel Denne enheten på jordes skikkelig hele tiden. Følg instruksjonene i denne veiledningen for å jorde enheten.

Aviso Este equipamento deverá estar ligado à terra. Siga las instrucciones en esta guía para conectar correctamente este dispositivo a tierra.

¡Atención! Este dispositivo debe estar correctamente conectado a tierra en todo momento. Siga las instrucciones en esta guía para conectar correctamente este dispositivo a tierra.

Varning! Den här enheten måste vara ordentligt jordad. Följ instruktionerna i den här guiden för att jorda enheten ordentligt.

Radiation from Open Port Apertures Warning



LASER WARNING: Because invisible radiation might be emitted from the aperture of the port when no fiber cable is connected, avoid exposure to radiation and do not stare into open apertures.

Waarschuwing Aangezien onzichtbare straling vanuit de opening van de poort kan komen als er geen fiberkabel aangesloten is, dient blootstelling aan straling en het kijken in open openingen vermeden te worden.

Varoitus Koska portin aukosta voi emittoitua näkymätöntä säteilyä, kun kuitukaapelia ei ole kytkettynä, vältä säteilylle altistumista äläkä katso avoimiin aukkoihin.

Avertissement Des radiations invisibles à l'il nu pouvant traverser l'ouverture du port lorsqu'aucun câble en fibre optique n'y est connecté, il est recommandé de ne pas regarder fixement l'intérieur de ces ouvertures.

Warnung Aus der Port-Öffnung können unsichtbare Strahlen emittieren, wenn kein Glasfaserkabel angeschlossen ist. Vermeiden Sie es, sich den Strahlungen auszusetzen, und starren Sie nicht in die Öffnungen!

Avvertenza Quando i cavi in fibra non sono inseriti, radiazioni invisibili possono essere emesse attraverso l'apertura della porta. Evitate di esporvi alle radiazioni e non guardate direttamente nelle aperture.

Advarsel Unngå utsettelse for stråling, og stirr ikke inn i åpninger som er åpne, fordi usynlig stråling kan emiteres fra portens åpning når det ikke er tilkoblet en fiberkabel.

Aviso Dada a possibilidade de emissão de radiação invisível através do orifício da via de acesso, quando esta não tiver nenhum cabo de fibra conectado, deverá evitar an EXposição à radiação e não deverá olhar fixamente para orifícios que se encontrarem a descoberto.

¡Atención! Debido a que la apertura del puerto puede emitir radiación invisible cuando no existe un cable de fibra conectado, evite mirar directamente a las aperturas para no exponerse a la radiación.

Varning! Osynlig strålning kan avges från en portöppning utan ansluten fiberkabel och du bör därför undvika att bli utsatt för strålning genom att inte stirra in i oskyddade öppningar.

Laser and LED Safety Guidelines and Warnings

IN THIS SECTION

General Laser Safety Guidelines | 197

- Class 1 Laser Product Warning | **197**
- Class 1 LED Product Warning | **198**
- Laser Beam Warning | **199**

Juniper Networks devices are equipped with laser transmitters, which are considered a Class 1 Laser Product by the U.S. Food and Drug Administration and are evaluated as a Class 1 Laser Product per IEC/EN 60825-1 requirements.

Observe the following guidelines and warnings:

General Laser Safety Guidelines

When working around ports that support optical transceivers, observe the following safety guidelines to prevent eye injury:

- Do not look into unterminated ports or at fibers that connect to unknown sources.
- Do not examine unterminated optical ports with optical instruments.
- Avoid direct exposure to the beam.



LASER WARNING: Unterminated optical connectors can emit invisible laser radiation. The lens in the human eye focuses all the laser power on the retina, so focusing the eye directly on a laser source—even a low-power laser—could permanently damage the eye.

Avertissement Les connecteurs à fibre optique sans terminaison peuvent émettre un rayonnement laser invisible. Le cristallin de l'œil humain faisant converger toute la puissance du laser sur la rétine, toute focalisation directe de l'œil sur une source laser, — même de faible puissance—, peut entraîner des lésions oculaires irréversibles.

Class 1 Laser Product Warning



LASER WARNING: Class 1 laser product.

Waarschuwing Klasse-1 laser produkt.

Varoitus Luokan 1 lasertuote.

Avertissement Produit laser de classe I.

Warnung Laserprodukt der Klasse 1.

Avvertenza Prodotto laser di Classe 1.

Advarsel Laserprodukt av klasse 1.

Aviso Produto laser de classe 1.

¡Atención! Producto láser Clase I.

Varning! Laserprodukt av klass 1.

Class 1 LED Product Warning



LASER WARNING: Class 1 LED product.
Waarschuwing Klasse 1 LED-product.

Varoitus Luokan 1 valodiodituote.

Avertissement Alarme de produit LED Class I.

Warnung Class 1 LED-Produktwarnung.

Avvertenza Avvertenza prodotto LED di Classe 1.

Advarsel LED-produkt i klasse 1.

Aviso Produto de classe 1 com LED.

¡Atención! Aviso sobre producto LED de Clase 1.

Varning! Lysdiodprodukt av klass 1.

Laser Beam Warning



LASER WARNING: Do not stare into the laser beam or view it directly with optical instruments.
Waarschuwing Niet in de straal staren of hem rechtstreeks bekijken met optische instrumenten.

Varoitus Älä katso säteeseen äläkä tarkastele sitä suoraan optisen laitteen avulla.

Avertissement Ne pas fixer le faisceau des yeux, ni l'observer directement à l'aide d'instruments optiques.

Warnung Nicht direkt in den Strahl blicken und ihn nicht direkt mit optischen Geräten prüfen.

Avvertenza Non fissare il raggio con gli occhi né usare strumenti ottici per osservarlo direttamente.

Advarsel Stirr eller se ikke direkte p strlen med optiske instrumenter.

Aviso Não olhe fixamente para o raio, nem olhe para ele directamente com instrumentos ópticos.

¡Atención! No mirar fijamente el haz ni observarlo directamente con instrumentos ópticos.

Varning! Rikta inte blicken in mot strålen och titta inte direkt på den genom optiska instrument.

Maintenance and Operational Safety Guidelines and Warnings

IN THIS SECTION

- Battery Handling Warning | **200**
- Jewelry Removal Warning | **201**
- Lightning Activity Warning | **202**

Operating Temperature Warning | 203
Product Disposal Warning | 204

While performing the maintenance activities for devices, observe the following guidelines and warnings:

Battery Handling Warning



WARNING: Replacing a battery incorrectly might result in an explosion. Replace a battery only with the same or equivalent type recommended by the manufacturer. Dispose of used batteries according to the manufacturer's instructions.

Waarschuwing Er is ontploffingsgevaar als de batterij verkeerd vervangen wordt. Vervang de batterij slechts met hetzelfde of een equivalent type dat door de fabrikant aanbevolen is. Gebruikte batterijen dienen overeenkomstig fabrieksvoorschriften weggeworpen te worden.

Varoitus Räjähdyksen vaara, jos akku on vaihdettu väärään akkuun. Käytä vaihtamiseen ainoastaan saman- tai vastaavantyyppistä akkua, joka on valmistajan suosittelema. Hävitä käytetyt akut valmistajan ohjeiden mukaan.

Avertissement Danger d'explosion si la pile n'est pas remplacée correctement. Ne la remplacer que par une pile de type semblable ou équivalent, recommandée par le fabricant. Jeter les piles usagées conformément aux instructions du fabricant.

Warnung Bei Einsetzen einer falschen Batterie besteht Explosionsgefahr. Ersetzen Sie die Batterie nur durch den gleichen oder vom Hersteller empfohlenen Batterietyp. Entsorgen Sie die benutzten Batterien nach den Anweisungen des Herstellers.

Advarsel Det kan være fare for eksplosjon hvis batteriet skiftes på feil måte. Skift kun med samme eller tilsvarende type som er anbefalt av produsenten. Kasser brukte batterier i henhold til produsentens instruksjoner.

Avvertenza Pericolo di esplosione se la batteria non è installata correttamente. Sostituire solo con una di tipo uguale o equivalente, consigliata dal produttore. Eliminare le batterie usate secondo le istruzioni del produttore.

Aviso Existe perigo de explosão se a bateria for substituída incorrectamente. Substitua a bateria por uma bateria igual ou de um tipo equivalente recomendado pelo fabricante. Destrua as baterias usadas conforme as instruções do fabricante.

¡Atención! Existe peligro de explosión si la batería se reemplaza de manera incorrecta. Reemplazar la baterían EXclusivamente con el mismo tipo o el equivalente recomendado por el fabricante. Desechar las baterías gastadas según las instrucciones del fabricante.

Varning! Explosionsfara vid felaktigt batteribyte. Ersätt endast batteriet med samma batterityp som rekommenderas av tillverkaren eller motsvarande. Följ tillverkarens anvisningar vid kassering av använda batterier.

Jewelry Removal Warning



WARNING: Before working on equipment that is connected to power lines, remove jewelry, including rings, necklaces, and watches. Metal objects heat up when connected to power and ground and can cause serious burns or can be welded to the terminals.

Waarschuwing Alvorens aan apparatuur te werken die met elektrische leidingen is verbonden, sieraden (inclusief ringen, kettingen en horloges) verwijderen. Metalen voorwerpen worden warm wanneer ze met stroom en aarde zijn verbonden, en kunnen ernstige brandwonden veroorzaken of het metalen voorwerp aan de aansluitklemmen lassen.

Varoitus Ennen kuin työskentelet voimavirtajohtoihin kytkettyjen laitteiden parissa, ota pois kaikki korut (sormukset, kaulakorut ja kellot mukaan lukien). Metalliesineet kuumenevat, kun ne ovat yhteydessä sähkövirran ja maan kanssa, ja ne voivat aiheuttaa vakavia palovammoja tai hitsata metalliesineet kiinni liitäntänapoihin.

Avertissement Avant d'accéder à cet équipement connecté aux lignes électriques, ôter tout bijou (anneaux, colliers et montres compris). Lorsqu'ils sont branchés à l'alimentation et reliés à la terre, les objets métalliques chauffent, ce qui peut provoquer des blessures graves ou souder l'objet métallique aux bornes.

Warnung Vor der Arbeit an Geräten, die an das Netz angeschlossen sind, jeglichen Schmuck (einschließlich Ringe, Ketten und Uhren) abnehmen. Metallgegenstände erhitzen sich, wenn sie an das Netz und die Erde angeschlossen werden, und können schwere Verbrennungen verursachen oder an die Anschlußklemmen angeschweißt werden.

Avvertenza Prima di intervenire su apparecchiature collegate alle linee di alimentazione, togliersi qualsiasi monile (inclusi anelli, collane, braccialetti ed orologi). Gli oggetti metallici si riscaldano quando sono collegati tra punti di alimentazione e massa: possono causare ustioni gravi oppure il metallo può saldarsi ai terminali.

Advarsel Fjern alle smykker (inkludert ringer, halskjeder og klokker) før du skal arbeide på utstyr som er koblet til kraftledninger. Metallgjenstander som er koblet til kraftledninger og jord blir svært varme og kan forårsake alvorlige brannskader eller smelte fast til polene.

Aviso Antes de trabalhar em equipamento que esteja ligado a linhas de corrente, retire todas as jóias que estiver a usar (incluindo anéis, fios e relógios). Os objectos metálicos aquecerão em contacto com a corrente e em contacto com a ligação à terra, podendo causar queimaduras graves ou ficarem soldados aos terminais.

¡Atención! Antes de operar sobre equipos conectados a líneas de alimentación, quitarse las joyas (incluidos anillos, collares y relojes). Los objetos de metal se calientan cuando se conectan a la alimentación y a tierra, lo que puede ocasionar quemaduras graves o que los objetos metálicos queden soldados a los bornes.

Varning! Tag av alla smycken (inklusive ringar, halsband och armbandsur) innan du arbetar på utrustning som är kopplad till kraftledningar. Metallobjekt hettas upp när de kopplas ihop med ström och jord och kan förorsaka allvarliga brännskador; metallobjekt kan också sammansvetsas med kontakterna.

Lightning Activity Warning



WARNING: Do not work on the system or connect or disconnect cables during periods of lightning activity.

Waarschuwing Tijdens onweer dat gepaard gaat met bliksem, dient u niet aan het systeem te werken of kabels aan te sluiten of te ontkoppelen.

Varoitus Älä työskentele järjestelmän parissa äläkä yhdistä tai irrota kaapeleita ukkosilmalla.

Avertissement Ne pas travailler sur le système ni brancher ou débrancher les câbles pendant un orage.

Warnung Arbeiten Sie nicht am System und schließen Sie keine Kabel an bzw. trennen Sie keine ab, wenn es gewittert.

Avvertenza Non lavorare sul sistema o collegare oppure scollegare i cavi durante un temporale con fulmini.

Advarsel Utfør aldri arbeid på systemet, eller koble kabler til eller fra systemet når det tordner eller lyner.

Aviso Não trabalhe no sistema ou ligue e desligue cabos durante períodos de mau tempo (trovoada).

¡Atención! No operar el sistema ni conectar o desconectar cables durante el transcurso de descargas eléctricas en la atmósfera.

Varning! Vid åska skall du aldrig utföra arbete på systemet eller ansluta eller koppla loss kablar.

Operating Temperature Warning



WARNING: To prevent the device from overheating, do not operate it in an area that exceeds the maximum recommended ambient temperature. To prevent airflow restriction, allow at least 6 in. (15.2 cm) of clearance around the ventilation openings.

Waarschuwing Om te voorkomen dat welke switch van de Juniper Networks router dan ook oververhit raakt, dient u deze niet te bedienen op een plaats waar de maximale aanbevolen omgevingstemperatuur van 40° C wordt overschreden. Om te voorkomen dat de luchtstroom wordt beperkt, dient er minstens 15,2 cm speling rond de ventilatie-openingen te zijn.

Varoitus Ettei Juniper Networks switch-sarjan reititin ylikuumentuisi, sitä ei saa käyttää tilassa, jonka lämpötila ylittää korkeimman suositellun ympäristölämpötilan 40° C. Ettei ilmanvaihto estyisi, tuuletusaukkojen ympärille on jätettävä ainakin 15,2 cm tilaa.

Avertissement Pour éviter toute surchauffe des routeurs de la gamme Juniper Networks switch, ne l'utilisez pas dans une zone où la température ambiante est supérieure à 40° C. Pour permettre un flot d'air constant, dégagez un espace d'au moins 15,2 cm autour des ouvertures de ventilations.

Warnung Um einen Router der switch vor Überhitzung zu schützen, darf dieser nicht in einer Gegend betrieben werden, in der die Umgebungstemperatur das empfohlene

Maximum von 40° C überschreitet. Um Lüftungsverschluß zu verhindern, achten Sie darauf, daß mindestens 15,2 cm lichter Raum um die Lüftungsöffnungen herum frei bleibt.

Avvertenza Per evitare il surriscaldamento dei switch, non adoperateli in un locale che ecceda la temperatura ambientale massima di 40° C. Per evitare che la circolazione dell'aria sia impedita, lasciate uno spazio di almeno 15.2 cm di fronte alle aperture delle ventole.

Advarsel Unngå overoppheting av eventuelle rutere i Juniper Networks switch Disse skal ikke brukes på steder der den anbefalte maksimale omgivelsestemperaturen overstiger 40° C (104° F). Sørg for at klaringen rundt lufteåpningene er minst 15,2 cm (6 tommer) for å forhindre nedsatt luftsirkulasjon.

Aviso Para evitar o sobreaquecimento do encaminhador Juniper Networks switch, não utilize este equipamento numa área que exceda a temperatura máxima recomendada de 40° C. Para evitar a restrição à circulação de ar, deixe pelo menos um espaço de 15,2 cm à volta das aberturas de ventilação.

¡Atención! Para impedir que un encaminador de la serie Juniper Networks switch se recaliente, no lo haga funcionar en un área en la que se supere la temperatura ambiente máxima recomendada de 40° C. Para impedir la restricción de la entrada de aire, deje un espacio mínimo de 15,2 cm alrededor de las aperturas para ventilación.

Varning! Förhindra att en Juniper Networks switch överhettas genom att inte använda den i ett område där den maximalt rekommenderade omgivningstemperaturen på 40° C överskrids. Förhindra att luftcirkulationen inskränks genom att se till att det finns fritt utrymme på minst 15,2 cm omkring ventilationsöppningarna.

Product Disposal Warning



WARNING: Disposal of this device must be handled according to all national laws and regulations.

Waarschuwing Dit produkt dient volgens alle landelijke wetten en voorschriften te worden afgedankt.

Varoitus Tämän tuotteen lopullisesta hävittämisestä tulee huolehtia kaikkia valtakunnallisia lakeja ja säännöksiä noudattaen.

Avertissement La mise au rebut définitive de ce produit doit être effectuée conformément à toutes les lois et réglementations en vigueur.

Warnung Dieses Produkt muß den geltenden Gesetzen und Vorschriften entsprechend entsorgt werden.

Avvertenza L'eliminazione finale di questo prodotto deve essere eseguita osservando le normative italiane vigenti in materia

Advarsel Endelig disponering av dette produktet må skje i henhold til nasjonale lover og forskrifter.

Aviso A descartagem final deste produto deverá ser efectuada de acordo com os regulamentos e a legislação nacional.

¡Atención! El desecho final de este producto debe realizarse según todas las leyes y regulaciones nacionales

Varning! Slutlig kassering av denna produkt bör skötas i enlighet med landets alla lagar och föreskrifter.

General Electrical Safety Guidelines Warnings



WARNING: Warning:
Certain ports on the device are designed for use as intrabuilding (within-the-building) interfaces only (Type 2 or Type 4 ports as described in *GR-1089-CORE*) and require isolation from the exposed outside plant (OSP) cabling. To protect against lightning surges and commercial power disturbances, the intrabuilding ports must not be metallically connected to interfaces that connect to the OSP or its wiring. The intrabuilding ports on the device are suitable for connection to intrabuilding or unexposed wiring or cabling only. The addition of primary protectors is not sufficient protection for connecting these interfaces metallically to OSP wiring.

Avertissement Certains ports de l'appareil sont destinés à un usage en intérieur uniquement (ports Type 2 ou Type 4 tels que décrits dans le document *GR-1089-CORE*) et doivent être isolés du câblage de l'installation extérieure exposée. Pour protection contre la foudre et les perturbations de tension secteur, les ports pour intérieur ne doivent pas être raccordés physiquement aux interfaces prévues pour la connexion à l'installation extérieure ou à son câblage. Les ports pour intérieur de l'appareil sont

réservés au raccordement de câbles pour intérieur ou non exposés uniquement. L'ajout de protections ne constitue pas une précaution suffisante pour raccorder physiquement ces interfaces au câblage de l'installation extérieure.

CAUTION: CAUTION: Before removing or installing components of a device, connect an electrostatic discharge (ESD) grounding strap to an ESD point and wrap and fasten the other end of the strap around your bare wrist. Failure to use an ESD grounding strap could result in damage to the device.

Attention Avant de retirer ou d'installer des composants d'un appareil, raccordez un bracelet antistatique à un point de décharge électrostatique et fixez le bracelet à votre poignet nu. L'absence de port d'un bracelet antistatique pourrait provoquer des dégâts sur l'appareil.

- Install the device in compliance with the following local, national, and international electrical codes:
  - United States—National Fire Protection Association (NFPA 70), United States National Electrical Code.
  - Other countries—International Electromechanical Commission (IEC) 60364, Part 1 through Part 7.
  - Evaluated to the TN power system.
  - Canada—Canadian Electrical Code, Part 1, CSA C22.1.
  - Suitable for installation in Information Technology Rooms in accordance with Article 645 of the National Electrical Code and NFPA 75.

    Peut être installé dans des salles de matériel de traitement de l'information conformément à l'article 645 du National Electrical Code et à la NFPA 75.
- Locate the emergency power-off switch for the room in which you are working so that if an electrical accident occurs, you can quickly turn off the power.
- Make sure that you clean grounding surface and give them a bright finish before making grounding connections.
- Do not work alone if potentially hazardous conditions exist anywhere in your workspace.
- Never assume that power is disconnected from a circuit. Always check the circuit before starting to work.
- Carefully look for possible hazards in your work area, such as moist floors, ungrounded power extension cords, and missing safety grounds.
- Operate the device within marked electrical ratings and product usage instructions.

- To ensure that the device and peripheral equipment function safely and correctly, use the cables and connectors specified for the attached peripheral equipment, and make certain they are in good condition.

You can remove and replace many device components without powering off or disconnecting power to the device, as detailed elsewhere in the hardware documentation for this device. Never install equipment that appears to be damaged.

Action to Take After an Electrical Accident

If an electrical accident results in an injury, take the following actions in this order:

1. Use caution. Be aware of potentially hazardous conditions that could cause further injury.
2. Disconnect power from the device.
3. If possible, send another person to get medical aid. Otherwise, assess the condition of the victim, and then call for help.

Prevention of Electrostatic Discharge Damage

Device components that are shipped in antistatic bags are sensitive to damage from static electricity. Some components can be impaired by voltages as low as 30 V. You can easily generate potentially damaging static voltages whenever you handle plastic or foam packing material or if you move components across plastic or carpets. Observe the following guidelines to minimize the potential for electrostatic discharge (ESD) damage, which can cause intermittent or complete component failures:

- Always use an ESD wrist strap when you are handling components that are subject to ESD damage, and make sure that it is in direct contact with your skin.

  If a grounding strap is not available, hold the component in its antistatic bag (see Figure 118 on page 208) in one hand and touch the exposed, bare metal of the device with the other hand immediately before inserting the component into the device.

  WARNING: For safety, periodically check the resistance value of the ESD grounding strap. The measurement must be in the range 1 through 10 Mohms.

Avertissement Par mesure de sécurité, vérifiez régulièrement la résistance du bracelet antistatique. Cette valeur doit être comprise entre 1 et 10 mégohms (Mohms).

- When handling any component that is subject to ESD damage and that is removed from the device, make sure the equipment end of your ESD wrist strap is attached to the ESD point on the chassis.

  If no grounding strap is available, touch the exposed, bare metal of the device to ground yourself before handling the component.

- Avoid contact between the component that is subject to ESD damage and your clothing. ESD voltages emitted from clothing can damage components.

- When removing or installing a component that is subject to ESD damage, always place it component-side up on an antistatic surface, in an antistatic card rack, or in an antistatic bag (see Figure 118 on page 208). If you are returning a component, place it in an antistatic bag before packing it.

Figure 118: Placing a Component into an Antistatic Bag

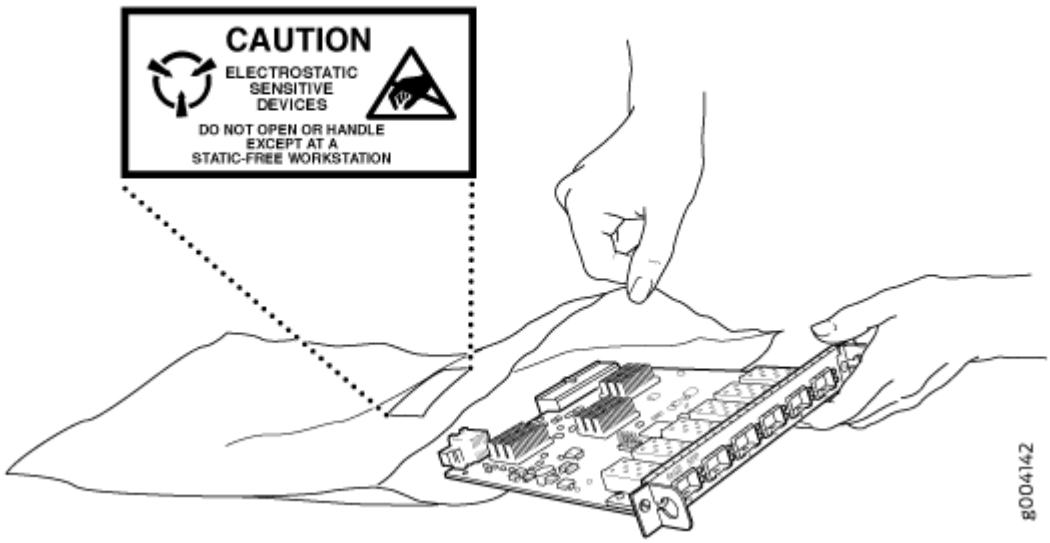

CAUTION: ANSI/TIA/EIA-568 cables such as Category 5e and Category 6 can get electrostatically charged. To dissipate this charge, always ground the cables to a suitable and safe earth ground before connecting them to the system.

Attention Les câbles ANSI/TIA/EIA-568, par exemple Cat 5e et Cat 6, peuvent emmagasiner des charges électrostatiques. Pour évacuer ces charges, reliez toujours les câbles à une prise de terre adaptée avant de les raccorder au système.

AC Power Electrical Safety Guidelines

The following electrical safety guidelines apply to AC-powered devices:

- Note the following warnings printed on the device:

  “**CAUTION:** THIS UNIT HAS MORE THAN ONE POWER SUPPLY CORD. DISCONNECT ALL POWER SUPPLY CORDS BEFORE SERVICING TO AVOID ELECTRIC SHOCK.”

  “**ATTENTION:** CET APPAREIL COMPORTE PLUS D'UN CORDON D'ALIMENTATION. AFIN DE PRÉVENIR LES CHOCS ÉLECTRIQUES, DÉBRANCHER TOUT CORDON D'ALIMENTATION AVANT DE FAIRE LE DÉPANNAGE.”

- AC-powered devices are shipped with a three-wire electrical cord with a grounding-type plug that fits only a grounding-type power outlet. Do not circumvent this safety feature. Equipment grounding must comply with local and national electrical codes.
- You must provide an external certified circuit breaker (2-pole circuit breaker or 4-pole circuit breaker based on your device) rated minimum 20 A in the building installation.
- The power cord serves as the main disconnecting device for the AC-powered device. The socket outlet must be near the AC-powered device and be easily accessible.
- For devices that have more than one power supply connection, you must ensure that all power connections are fully disconnected so that power to the device is completely removed to prevent electric shock. To disconnect power, unplug all power cords (one for each power supply).

Power Cable Warning (Japanese)

WARNING: The attached power cable is only for this product. Do not use the cable for another product.

注意

附属の電源コードセットはこの製品専用です。
他の電気機器には使用しないでください。



AC Power Disconnection Warning



WARNING: Before working on the device or near power supplies, unplug all the power cords from an AC-powered device.

Waarschuwing Voordat u aan een frame of in de nabijheid van voedingen werkt, dient u bij wisselstroom toestellen de stekker van het netsnoer uit het stopcontact te halen.

Varoitus Kytke irti vaihtovirtalaitteiden virtajohto, ennen kuin teet mitään asennuspohjalle tai työskentelet virtalähteiden läheisyydessä.

Avertissement Avant de travailler sur un châssis ou à proximité d'une alimentation électrique, débrancher le cordon d'alimentation des unités en courant alternatif.

Warnung Bevor Sie an einem Chassis oder in der Nähe von Netzgeräten arbeiten, ziehen Sie bei Wechselstromeinheiten das Netzkabel ab bzw.

Avvertenza Prima di lavorare su un telaio o intorno ad alimentatori, scollegare il cavo di alimentazione sulle unità CA.

Advarsel Før det utføres arbeid på kabinettet eller det arbeides i nærheten av strømforsyningsenheter, skal strømledningen trekkes ut på vekselstrømsenheter.

Aviso Antes de trabalhar num chassis, ou antes de trabalhar perto de unidades de fornecimento de energia, desligue o cabo de alimentação nas unidades de corrente alternada.

¡Atención! Antes de manipular el chasis de un equipo o trabajar cerca de una fuente de alimentación, desenchufar el cable de alimentación en los equipos de corriente alterna (CA).

Varning! Innan du arbetar med ett chassi eller nära strömförsörjningsenheter skall du för växelströmsenheter dra ur nätsladden.

Multiple Power Supplies Disconnection Warning



WARNING: The network device has more than one power supply connection. All connections must be removed completely to remove power from the unit completely.

Waarschuwing Deze eenheid heeft meer dan één stroomtoevoerverbinding; alle verbindingen moeten volledig worden verwijderd om de stroom van deze eenheid volledig te verwijderen.

Varoitus Tässä laitteessa on useampia virtalähdekytkentöjä. Kaikki kytkennät on irrotettava kokonaan, jotta virta poistettaisiin täysin laitteesta.

Avertissement Cette unité est équipée de plusieurs raccordements d'alimentation. Pour supprimer tout courant électrique de l'unité, tous les cordons d'alimentation doivent être débranchés.

Warnung Diese Einheit verfügt über mehr als einen Stromanschluß; um Strom gänzlich von der Einheit fernzuhalten, müssen alle Stromzufuhren abgetrennt sein.

Avvertenza Questa unità ha più di una connessione per alimentatore elettrico; tutte le connessioni devono essere completamente rimosse per togliere l'elettricità dall'unità.

Advarsel Denne enheten har mer enn én strømtilkobling. Alle tilkoblinger må kobles helt fra for å eliminere strøm fra enheten.

Aviso Este dispositivo possui mais do que uma conexão de fonte de alimentação de energia; para poder remover a fonte de alimentação de energia, deverão ser desconectadas todas as conexões existentes.

¡Atención! Esta unidad tiene más de una conexión de suministros de alimentación; para eliminar la alimentación por completo, deben desconectarse completamente todas las conexiones.

Varning! Denna enhet har mer än en strömförsörjningsanslutning; alla anslutningar måste vara helt avlägsnade innan strömtillförseln till enheten är fullständigt bruten.

TN Power Warning



WARNING: The device is designed to work with a TN power system.
Waarschuwing Het apparaat is ontworpen om te functioneren met TN energiesystemen.

Varoitus Koje on suunniteltu toimimaan TN-sähkövoimajärjestelmien yhteydessä.

Avertissement Ce dispositif a été conçu pour fonctionner avec des systèmes d'alimentation TN.

Warnung Das Gerät ist für die Verwendung mit TN-Stromsystemen ausgelegt.

Avvertenza Il dispositivo è stato progettato per l'uso con sistemi di alimentazione TN.

Advarsel Utstyret er utfomet til bruk med TN-strømsystemer.

Aviso O dispositivo foi criado para operar com sistemas de corrente TN.

¡Atención! El equipo está diseñado para trabajar con sistemas de alimentación tipo TN.

Varning! Enheten är konstruerad för användning tillsammans med elkraftssystem av TN-typ.

EX Series Agency Approvals

SUMMARY

This topic lists the agency approvals for EX4000 switches.

IN THIS SECTION

- Compliance Statement for Argentina | 213

This hardware devices complies with the following standards:

- Safety
  - UL 60950-1:2007 R10.14 Information Technology Equipment
  - CAN/CSA-C22.2 No. 60950-1-07, Amd 1:2011, Amd 2:2014 Information Technology Equipment.
  - IEC 62368-1:2014 Audio/Video, Information and Communication Technology Equipment.
  - IEC 62368-1:2018 Audio/Video, Information and Communication Technology Equipment.
  - UL/CSA 62368-1:2019 Audio/Video, Information and Communication Technology Equipment.
  - IEC/EN 60825-1 Safety of Laser Products – Part 1: Equipment classification and requirements.
- EMC
  - FCC 47 CFR Part 15
  - ICES-003 / ICES-GEN

- BS EN 55032
- BS EN 55035
- EN 300 386 V1.6.1
- BS EN 300 386
- EN 55032
- CISPR 32
- EN 55035
- CISPR 35
- IEC/EN 61000-3-2
- IEC/EN 61000-3-3
- AS/NZS CISPR 32
- VCCI-CISPR 32
- BSMI CNS 15936
- KS C 9835
- KS C 9832
- KS C 9610

Compliance Statement for Argentina

EQUIPO DE USO IDÓNEO.

Compliance Statements for EMC Requirements for EX Series Switches

IN THIS SECTION

- Canada | 214
- Taiwan | 215
- European Community | 215
- Israel | 216
- Japan | 216
- Korea | 216
- United States | 217
- FCC Part 15 Statement | 217

This topic applies to hardware devices in the EX Series product family, which includes EX Series switches, the EX Series Redundant Power System (RPS), and the XRE200 External Routing Engine.

This topic describes the EMC requirements for these hardware devices.

Canada

This Class A digital apparatus complies with Canadian ICES-003.

Cet appareil numérique de la classe A est conforme à la norme NMB-003 du Canada.

The Industry Canada label identifies certified equipment. This certification means that the equipment meets certain telecommunications network protective, operational, and safety requirements. Industry Canada does not guarantee the equipment will operate to the users' satisfaction.

Before installing this equipment, users should ensure that it is permissible to connect the equipment to the facilities of the local telecommunications company. The equipment must also be installed using an acceptable method of connection. In some cases, the inside wiring associated with a single line individual service can be extended by means of a certified connector assembly. The customer should be

aware that compliance with the above conditions might not prevent degradation of service in some situations.

Repairs to certified equipment should be made by an authorized Canadian maintenance facility designated by the supplier. Any repairs or alterations made by the user to this equipment, or equipment malfunctions, might give the telecommunications company cause to request the user to disconnect the equipment.



CAUTION: Users should not attempt to make electrical ground connections by themselves, but should contact the appropriate inspection authority or an electrician, as appropriate.

Users should ensure for their own protection that the electrical ground connections of the power utility, telephone lines, and internal metallic water pipe system, if present, are connected together. This precaution might be particularly important in rural areas.

Taiwan

此為甲類資訊技術設備。於一般家居環境使用時，本設備可能導致射頻干擾，用□請採取相應措施。

The preceding translates as follows:

This is a Class A device. In a domestic environment, this device might cause radio interference, in which case the user needs to take adequate measures.

European Community

This is a Class A device. In a domestic environment this device might cause radio interference, in which case the user needs to take adequate measures.

Israel

אזהרה

מוצר זה הוא מוצר Class A.
בסביבה ביתית,מוצר זה עלול לגרום הפרעות בתדר רדיו,ובמקרה זה ,המשתמש עשוי להידרש לנקוט אמצעים מתאימים.

The preceding translates as follows:

Warning: This product is Class A. In residential environments, the product may cause radio interference, and in such a situation, the user may be required to take adequate measures.

Japan

この装置は、クラス A 情報技術装置です。この装置を家庭環境で使用すると電波妨害を引き起こすことがあります。この場合には使用者が適切な対策を講ずるよう要求されることがあります。 VCCI-A

The preceding translates as follows:

This is a Class A device. In a domestic environment this device might cause radio interference, in which case the user needs to take adequate measures.

VCCI-A

Korea

이 기기는 업무용(A급) 전자파적합기기로서 판매자 또는 사용자는 이 점을 주의하시기 바라며, 가정외의 지역에서 사용하는 것을 목적으로 합니다.

Korean Class A Warning g040913

The preceding translates as follows:

This equipment is Industrial (Class A) electromagnetic wave suitability equipment and seller or user should take notice of it, and this equipment is to be used in the places except for home

United States

The device has been tested and found to comply with the limits for a Class A digital device, pursuant to Part 15 of the FCC Rules. These limits are designed to provide reasonable protection against harmful interference when the equipment is operated in a commercial environment. This equipment generates, uses, and can radiate radio frequency energy and, if not installed and used in accordance with the instruction manual, might cause harmful interference to radio communications. Operation of this equipment in a residential area is likely to cause harmful interference, in which case users need to correct the interference at their own expense.

FCC Part 15 Statement

This equipment has been tested and found to comply with the limits for a Class A digital device pursuant to Part 15 of the FCC Rules. These limits are designed to provide reasonable protection against harmful interference in a residential installation. This equipment generates, uses, and can radiate radio frequency energy and, if not installed and used in accordance with the instructions, might cause harmful interference to radio communications. However, there is no guarantee that interference will not occur in a particular installation.

If this equipment does cause harmful interference to radio or television reception, which can be determined by turning the equipment off and on, the user is encouraged to try and correct the interference by one or more of the following measures:

- Reorient or relocate the receiving antenna.
- Increase the separation between the equipment and the receiver.
- Connect the equipment into an outlet on a circuit different from that to which the receiver is connected.
- Consult the dealer or an experienced radio or TV technician for help.

Compliance Statements for Acoustic Noise for EX Series Switches

This topic applies to hardware devices in the EX Series product family, which includes EX Series switches, the EX Series Redundant Power System (RPS), and the XRE200 External Routing Engine.

Maschinenlärminformations-Verordnung - 3. GPSGV, der höchste Schalldruckpegel beträgt 70 dB(A) oder weniger gemäss EN ISO 7779

Translation: The emitted sound pressure is below 70 dB(A) per EN ISO 7779.

Statements of Volatility for Juniper Network Devices

A *statement of volatility (SoV)*—sometimes known as *letter of volatility (LoV)*—identifies the volatile and non-volatile storage components in Juniper Networks devices, and describes how to remove non-volatile storage components from the device.

NOTE: Individual FRUs do not have separate SoV or LoV documents. They are covered in the SoV or LoV of the Juniper Networks device in which they are installed.

NOTE: Statements of volatility are not available for all Juniper Networks devices.

CTP Series:

- CTP150
- CTP2000

EX Series:

- EX2200 and EX2200-C
- EX2300-24P, EX2300-24T, and EX2300-24T-DC
- EX2300-48P and EX2300-48T
- EX2300-C

- EX3300
- EX3400-24P, EX3400-24T, EX3400-24T-DC
- EX3400-48P, EX3400-48T, EX3400-48T-AFI
- EX4200
- EX4300
- EX4300-48MP
- EX4400
    1. EX4400-24T
    2. EX4400-24P
    3. EX4400-24MP
    4. EX4400-48T
    5. EX4400-48P
    6. EX4400-48MP
    7. EX4400-48F
- EX4500
- EX4550
- EX4600
- EX8200
- EX9251
- EX9253
- XRE200 External Routing Engine

LN Series:

- LN1000–CC

MX Series:

- M7i
- M7i Compact Forwarding Engine Board (CFEB)

- M40e and M10i
- M320
- MX5, MX10, MX40, and MX80
- MX104
- MX204
- MX304
- MX240, MX480, and MX960
- MX10003
- RE-A-2000 Route Engine
- RE-S-X6-64G Routing Engine

NFX Series:

- NFX250

QFX Series:

- QFX3008-I
- QFX3100
- QFX3500
- QFX3600
- QFX5100-24Q
- QFX5100-48S
- QFX5100-48T
- QFX5110-32Q
- QFX5110-48S
- QFX5120
    1. QFX5120-32C
    2. QFX5120-48T
    3. QFX5120-48Y

4. QFX5120-48YM

- QFX5200
- QFX5200-32C
- QFX10008 and QFX10016

SRX Series:

- SRX100
- SRX110
- SRX210B
- SRX210H-POE
- SRX210H-P-MGW
- SRX220
- SRX240H
- SRX240H-POE
- SRX300
- SRX320
- SRX340 and SRX345
- SRX380
- SRX550
- SRX650
- SRX1400
- SRX1500
- SRX3400 and SRX3600
- SRX4200
- SRX4600
- SRX5400, SRX5600, and SRX5800
- SRX-MP-1SERIAL

- SSG-520M

T Series:

- RE-A-2000 Route Engine

8
CHAPTER

Appendix

IN THIS CHAPTER

- EX4000 Network Cable and Transceiver Planning | **224**
- EX4000 Management Cable Specifications and Pinouts | **231**
- Connect the EX4000 Switch to External Devices | **239**
- Connect the EX4000 Switch to the Network | **242**
- Maintain Fiber-Optic Cables | **246**
- Maintain Transceivers | **248**

EX4000 Network Cable and Transceiver Planning

IN THIS SECTION

- Pluggable Transceivers and Cables Supported on EX4000 Switches | 224
- SFP+ Direct Attach Copper Cables for EX Series Switches | 225
- Overview of EX Series Switches: Fiber-Optic Cable Signal Loss, Attenuation, and Dispersion | 227
- Calculate the Fiber-Optic Cable Power Budget for EX Series Devices | 228
- Calculating the Fiber-Optic Cable Power Margin for EX Series Devices | 229

Pluggable Transceivers and Cables Supported on EX4000 Switches

The Hardware Compatibility Tool lists the transceivers that EX4000 switches support and provides general information about those transceivers.

NOTE: We recommend that you use only optical transceivers and optical connectors purchased from Juniper Networks with your Juniper Networks device.

NOTE: On EX4000-12MP, EX4000-24MP, and EX4000-48MP EMC certification was performed with shielded RJ-45 Ethernet cables on the 2.5G ports.

CAUTION: The Juniper Networks Technical Assistance Center (JTAC) provides complete support for Juniper-supplied optical modules and cables. However, JTAC does not provide support for third-party optical modules and cables that are not qualified or supplied by Juniper Networks. If you face a problem running a Juniper device that uses third-party optical modules or cables, JTAC may help you diagnose host-related issues if the observed issue is not, in the opinion of JTAC, related to the use of the third-party optical modules or cables. Your JTAC engineer will likely request that you check the third-party optical module or cable and, if required, replace it with an equivalent Juniper-qualified component.

Use of third-party optical modules with high-power consumption (for example, coherent ZR or ZR+) can potentially cause thermal damage to or reduce the lifespan of the host equipment. Any damage to the host equipment due to the use of third-party optical modules or cables is the users' responsibility. Juniper Networks will accept no liability for any damage caused due to such use.

The Gigabit Ethernet (GbE) transceivers installed in EX4000 switches support digital optical monitoring (DOM). You can view the diagnostic details for these transceivers by issuing the operational mode CLI command `show interfaces diagnostics optics` .

NOTE:

SFP+ Direct Attach Copper Cables for EX Series Switches

IN THIS SECTION

- Cable Specifications | **226**
- Standards Supported by These Cables | **226**

Small form-factor pluggable plus transceiver (SFP+) direct attach copper (DAC) cables, also known as Twinax cables, are suitable for in-rack connections between servers and switches. They are suitable for short distances, making them ideal for highly cost-effective networking connectivity within a rack and between adjacent racks.

NOTE: We recommend that you use only SFP+ DAC cables purchased from Juniper Networks with your Juniper Networks device.

CAUTION: The Juniper Networks Technical Assistance Center (JTAC) provides complete support for Juniper-supplied optical modules and cables. However, JTAC does not provide support for third-party optical modules and cables that are not qualified or supplied by Juniper Networks. If you face a problem running a Juniper device that uses third-party optical modules or cables, JTAC may help you diagnose host-related issues if

the observed issue is not, in the opinion of JTAC, related to the use of the third-party optical modules or cables. Your JTAC engineer will likely request that you check the third-party optical module or cable and, if required, replace it with an equivalent Juniper-qualified component.

Use of third-party optical modules with high-power consumption (for example, coherent ZR or ZR+) can potentially cause thermal damage to or reduce the lifespan of the host equipment. Any damage to the host equipment due to the use of third-party optical modules or cables is the users' responsibility. Juniper Networks will accept no liability for any damage caused due to such use.

Cable Specifications

EX Series switches support SFP+ passive DAC cables. The passive Twinax cable is a straight cable with no active electronic components. EX Series switches support 1 m, 3 m, and 5 m long SFP+ passive DAC cables. See Figure 119 on page 226.

Figure 119: SFP+ Direct Attach Copper Cables for EX Series Switches

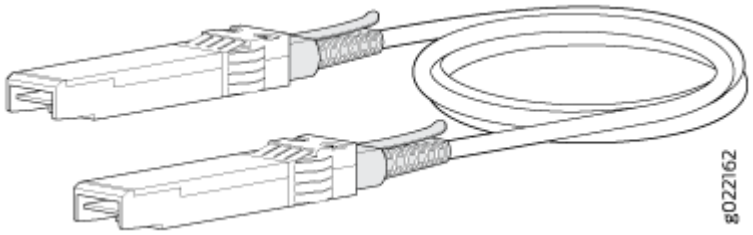

The cables are hot-removable and hot-insertable: You can remove and replace them without powering off the switch or disrupting switch functions. A cable comprises a low-voltage cable assembly that connects directly into two 10-Gigabit Ethernet (GbE) ports, one at each end of the cable. The cables use high-performance integrated duplex serial data links for bidirectional communication and are designed for data rates of up to 10 Gbps.

Standards Supported by These Cables

The cables comply with the following standards:

- SFP mechanical standard SFF-843— see ftp://ftp.seagate.com/sff/SFF-8431.PDF.
- Electrical interface standard SFF-8432— see ftp://ftp.seagate.com/sff/SFF-8432.PDF.
- SFP+ Multi-Source Alliance (MSA) standards

Overview of EX Series Switches: Fiber-Optic Cable Signal Loss, Attenuation, and Dispersion

IN THIS SECTION

- Signal Loss in Multimode and Single-Mode Fiber-Optic Cable | 227
- Attenuation and Dispersion in Fiber-Optic Cable | 227

To determine the power budget and power margin needed for fiber-optic connections, you need to understand how signal loss, attenuation, and dispersion affect transmission. EX Series switches use various types of network cables, including multimode and single-mode fiber-optic cable.

Signal Loss in Multimode and Single-Mode Fiber-Optic Cable

Multimode fiber is large enough in diameter to allow rays of light to reflect internally (bounce off the walls of the fiber). Interfaces with multimode optics typically use LEDs as light sources. However, LEDs are not coherent light sources. They spray varying wavelengths of light into the multimode fiber, which reflects the light at different angles. Light rays travel in jagged lines through a multimode fiber, causing signal dispersion. When light traveling in the fiber core radiates into the fiber), higher-order mode loss (HOL) occurs. (Cladding consists of layers of lower-refractive index material in close contact with a core material of higher refractive index.) Together, these factors reduce the transmission distance of multimode fiber compared to that of single-mode fiber.

Single-mode fiber is so small in diameter that rays of light reflect internally through one layer only. Interfaces with single-mode optics use lasers as light sources. Lasers generate a single wavelength of light, which travels in a straight line through the single-mode fiber. Compared to multimode fiber, single-mode fiber has a higher bandwidth and can carry signals for longer distances. Single-mode fiber is consequently more expensive than multimode fiber.

Exceeding the maximum transmission distances can result in significant signal loss, which causes unreliable transmission.

Attenuation and Dispersion in Fiber-Optic Cable

An optical data link functions correctly provided that modulated light reaching the receiver has enough power to be demodulated correctly. *Attenuation* is the reduction in strength of the light signal during transmission. Passive media components such as cables, cable splices, and connectors cause attenuation. Although attenuation is significantly lower for optical fiber than for other media, it still

occurs in both multimode and single-mode transmissions. An efficient optical data link must transmit enough light to overcome attenuation.

Dispersion is the spreading of the signal over time. The following two types of dispersion can affect signal transmission through an optical data link:

- Chromatic dispersion, which is the spreading of the signal over time caused by the different speeds of light rays
- Modal dispersion, which is the spreading of the signal over time caused by the different propagation modes in the fiber

For multimode transmission, modal dispersion usually limits the maximum bit rate and link length. Chromatic dispersion or attenuation is not a factor.

For single-mode transmission, modal dispersion is not a factor. However, at higher bit rates and over longer distances, chromatic dispersion limits the maximum link length.

An efficient optical data link must have enough light to exceed the minimum power that the receiver requires to operate within its specifications. In addition, the total dispersion must be within the limits specified for the type of link in Telcordia Technologies document GR-253-CORE (Section 4.3) and International Telecommunications Union (ITU) document G.957.

When chromatic dispersion is at the maximum allowed, you can consider its effect as a power penalty in the power budget. The optical power budget must allow for the sum of component attenuation, power penalties (including those from dispersion), and a safety margin for unexpected power loss.

Calculate the Fiber-Optic Cable Power Budget for EX Series Devices

To ensure that fiber-optic connections have sufficient power for correct operation, calculate the link's power budget when planning fiber-optic cable layout and distances. This planning helps you ensure that fiber-optic connections have sufficient power for correct operation. The power budget is the maximum amount of power the link can transmit. When you calculate the power budget, you use a worst-case analysis to provide a margin of error. You use a worst-case analysis even though not all the parts of an actual system operate at the worst-case levels.

To calculate the worst-case estimate for a fiber-optic cable power budget (P_B) for the link:

1. Determine values for the link's minimum transmitter power (P_T) and minimum receiver sensitivity (P_R). In the following example, we measure both (P_T) and (P_R) in decibels relative to one milliwatt (dBm).

   P_T = – 15 dBm

   P_R = – 28 dBm

NOTE: See the specifications for your transmitter and receiver to find the minimum transmitter power and minimum receiver sensitivity.

2. Calculate the power budget (P_B) by subtracting (P_R) from (P_T):

   – 15 dBm – (–28 dBm) = 13 dBm

Calculating the Fiber-Optic Cable Power Margin for EX Series Devices

Before calculating the power margin, calculate the power budget (see Calculating the Fiber-Optic Cable Power Budget for EX Series Devices).

Calculate the link's power margin when planning fiber-optic cable layout and distances to ensure that fiber-optic connections have sufficient signal power to overcome system loss and still satisfy the minimum input requirements of the receiver for the required performance level. The power margin (P_M) is the amount of power available after you subtract attenuation or link loss (LL) from the power budget (P_B).

When you calculate the power margin, you use a worst-case analysis to provide a margin of error, even though not all parts of an actual system operate at worst-case levels. A power margin (P_M) greater than zero indicates that the power budget is sufficient to operate the receiver and that it does not exceed the maximum receiver input power. This means that the link will work. A (P_M) that is zero or negative indicates insufficient power to operate the receiver. See the specification for your receiver to find the maximum receiver input power.

To calculate the worst-case estimate for the power margin (P_M) for the link:

1. Determine the maximum value for link loss (LL) by adding estimated values for applicable link-loss factors—for example, use the sample values for various factors as provided in Table 50 on page 229 (here, the link is 2 km long and multimode, and the (P_B) is 13 dBm):

   Table 50: Estimated Values for Factors Causing Link Loss

Link-Loss Factor	Estimated Link-Loss Value	Sample (LL) Calculation Values
Higher-order mode losses (HOL)	• Multimode—0.5 dBm • Single mode—None	• 0.5 dBm • 0 dBm

Table 50: Estimated Values for Factors Causing Link Loss *(Continued)*

Link-Loss Factor	Estimated Link-Loss Value	Sample (LL) Calculation Values
Modal and chromatic dispersion	• Multimode—None, if product of bandwidth and distance is less than 500 MHz/km • Single mode—None	• 0 dBm • 0 dBm
Connector	0.5 dBm	This example assumes 5 connectors. Loss for 5 connectors: (5) * (0.5 dBm) = 2.5 dBm
Splice	0.5 dBm	This example assumes 2 splices. Loss for two splices: (2) * (0.5 dBm) = 1 dBm
Fiber attenuation	• Multimode—1 dBm/km • Single mode—0.5 dBm/km	This example assumes the link is 2 km long. Fiber attenuation for 2 km: • (2 km) * (1.0 dBm/km) = 2 dBm • (2 km) * (0.5 dBm/km) = 1 dBm
Clock Recovery Module (CRM)	1 dBm	1 dBm

NOTE: For information about the actual amount of signal loss caused by equipment and other factors, see your vendor documentation for that equipment.

2. Calculate the (P_M) by subtracting (LL) from (P_B):

   $P_B - LL = P_M$

   (13 dBm) – (0.5 dBm [HOL]) – ((5) * (0.5 dBm)) – ((2) * (0.5 dBm)) – ((2 km) * (1.0 dBm/km)) – (1 dB [CRM]) = P_M

   13 dBm – 0.5 dBm – 2.5 dBm – 1 dBm – 2 dBm – 1 dBm = P_M

   P_M = 6 dBm

The calculated power margin is greater than zero, indicating that the link has sufficient power for transmission. Also, the power margin value does not exceed the maximum receiver input power. Refer to the specification for your receiver to find the maximum receiver input power.

EX4000 Management Cable Specifications and Pinouts

IN THIS SECTION

- Management Cable Specifications | **231**
- Console Port Connector Pinout Information | **232**
- USB Port Specifications for an EX Series Switch | **233**
- RJ-45 Management Port Connector Pinout Information | **234**
- RJ-45 Port, SFP Port, and SFP+ Port Connector Pinouts | **234**
- RJ-45 to DB-9 Serial Port Adapter Pinout Information | **238**

Management Cable Specifications

Table 51 on page 231 lists the specifications for the cables that connect the console and management ports to management devices.

Table 51: Specifications of Cables to Connect to Management Devices

Ports	Cable Specifications	Receptacle	Additional Information
RJ-45 Console port	CAT 5e UTP (unshielded twisted pair) cable	RJ-45	Connect a Device to a Management Console Using an RJ-45 Connector

Table 51: Specifications of Cables to Connect to Management Devices *(Continued)*

Ports	Cable Specifications	Receptacle	Additional Information
Management Ethernet port	Cat 6 Ethernet cable with an RJ-45 connector.	RJ-45	Connect a Device to a Network for Out-of-Band Management

Console Port Connector Pinout Information

The console port on a Juniper Networks device is an RS-232 serial interface that uses an RJ-45 connector to connect to a console management device. The default baud rate for the console port is 9600 baud.

Table 52 on page 232 provides the pinout information for the RJ-45 console connector.

NOTE: We no longer include the RJ-45 console cable with the DB-9 adapter as part of the device package. If the console cable and adapter are not included in your device package, or if you need a different type of adapter, you can order the following separately:

- RJ-45 to DB-9 adapter (JNP-CBL-RJ45-DB9)
- RJ-45 to USB-A adapter (JNP-CBL-RJ45-USBA)

NOTE: If your laptop or desktop PC does not have a DB-9 plug connector pin and you want to connect your laptop or desktop PC directly to a device, use a combination of the RJ-45-to-DB-9 socket adapter and a USB-to-DB-9 plug adapter. You must provide the USB-to-DB-9 plug adapter.

Table 52: Console Port Connector Pinout Information

Pin	Signal	Description
1	NC	No connect

Table 52: Console Port Connector Pinout Information *(Continued)*

Pin	Signal	Description
2	NC	No connect
3	TxD Output	Transmit data
4	GND	Signal ground
5	GND	Signal ground
6	RxD Input	Receive data
7	DCD Input	Data carrier detect
8	NC	No connect

USB Port Specifications for an EX Series Switch

Juniper Networks tested and officially supports the following USB flash drives for the USB port on all EX Series switches:

- RE-USB-1G-S
- RE-USB-2G-S
- RE-USB-4G-S

CAUTION: Any USB memory product not listed as supported for EX Series switches has not been tested by Juniper Networks. The use of any unsupported USB memory product could expose your EX Series switch to unpredictable behavior. Juniper Networks Technical Assistance Center (JTAC) can provide only limited support for issues related to unsupported hardware. We strongly recommend that you use only supported USB flash drives.

All USB flash drives used on EX Series switches must have the following features:

- USB 2.0 or later.
- Formatted with a FAT32 or MS-DOS file system.

RJ-45 Management Port Connector Pinout Information

Table 53 on page 234 provides the pinout information for the RJ-45 connector for the management port on Juniper Networks devices.

Table 53: RJ-45 Management Port Connector Pinout Information

Pin	Signal	Description
1	TRP1+	Transmit/receive data pair 1
2	TRP1-	Transmit/receive data pair 1
3	TRP2+	Transmit/receive data pair 2
4	TRP3+	Transmit/receive data pair 3
5	TRP3-	Transmit/receive data pair 3
6	TRP2-	Transmit/receive data pair 2
7	TRP4+	Transmit/receive data pair 4
8	TRP4-	Transmit/receive data pair 4

RJ-45 Port, SFP Port, and SFP+ Port Connector Pinouts

The following tables describe the connector pinout information for the RJ-45, SFP+, and SFP ports:

- Table 54 on page 235 for 10/100/1000BASE-T Ethernet Network Port Connector Pinout Information.

- Table 55 on page 235 for SFP Network Port Connector Pinout Information.
- Table 56 on page 237 for SFP+ Network Port Connector Pinout Information.

Table 54: 10/100/1000BASE-T Ethernet Network Port Connector Pinout Information

Pin	Signal	Description
1	TRP1+	Transmit/receive data pair 1 Negative Vport (in PoE models)
2	TRP1-	Transmit/receive data pair 1 Negative Vport (in PoE models)
3	TRP2+	Transmit/receive data pair 2 Positive Vport (in PoE models)
4	TRP3+	Transmit/receive data pair 3
5	TRP3-	Transmit/receive data pair 3
6	TRP2-	Transmit/receive data pair 2 Positive Vport (in PoE models)
7	TRP4+	Transmit/receive data pair 4
8	TRP4-	Transmit/receive data pair 4

Table 55: SFP Network Port Connector Pinout Information

Pin	Signal	Description
1	VeeT	Module transmitter ground
2	TX_Fault	Module transmitter fault

Table 55: SFP Network Port Connector Pinout Information *(Continued)*

Pin	Signal	Description
3	TX_Disable	Transmitter disabled
4	SDA	2-wire serial interface data line
5	SCL-	2-wire serial interface clock
6	MOD_ABS	Module absent
7	RS	Rate select
8	RX_LOS	Receiver loss of signal indication
9	VeeR	Module receiver ground
10	VeeR	Module receiver ground
11	VeeR	Module receiver ground
12	RD-	Receiver inverted data output
13	RD+	Receiver noninverted data output
14	VeeR	Module receiver ground
15	VccR	Module receiver 3.3 V supply
16	VccT	Module transmitter 3.3 V supply
17	VeeT	Module transmitter ground

Table 55: SFP Network Port Connector Pinout Information *(Continued)*

Pin	Signal	Description
18	TD+	Transmitter noninverted data input
19	TD-	Transmitter inverted data input
20	VeeT	Module transmitter ground

Table 56: SFP+ Network Port Connector Pinout Information

Pin	Signal	Description
1	VeeT	Module transmitter ground
2	TX_Fault	Module transmitter fault
3	TX_Disable	Transmitter disabled
4	SDA	2-wire serial interface data line
5	SCL-	2-wire serial interface clock
6	MOD_ABS	Module absent
7	RS0	Rate select 0, optionally controls SFP+ module receiver
8	RX_LOS	Receiver loss of signal indication
9	RS1	Rate select 1, optionally controls SFP+ transmitter
10	VeeR	Module receiver ground
11	VeeR	Module receiver ground

Table 56: SFP+ Network Port Connector Pinout Information *(Continued)*

Pin	Signal	Description
12	RD-	Receiver inverted data output
13	RD+	Receiver noninverted data output
14	VeeR	Module receiver ground
15	VccR	Module receiver 3.3-V supply
16	VccT	Module transmitter 3.3-V supply
17	VeeT	Module transmitter ground
18	TD+	Transmitter noninverted data input
19	TD-	Transmitter inverted data input
20	VeeT	Module transmitter ground

RJ-45 to DB-9 Serial Port Adapter Pinout Information

The console port on a Juniper Networks device is an RS-232 serial interface that uses an RJ-45 connector to connect to a management device such as a laptop or a desktop PC. If your laptop or desktop PC does not have a DB-9 plug connector pin and you want to connect your laptop or desktop PC to the device, use a combination of the RJ-45 to DB-9 socket adapter along with a USB to DB-9 plug adapter.

Table 57 on page 239 provides the pinout information for the RJ-45 to DB-9 serial port adapter.

Table 57: RJ-45 to DB-9 Serial Port Adapter Pinout Information

RJ-45 pin	Signal	DB-9 pin	Signal
1	NC	8	CTS
2	NC	6	DSR
3	TxD	2	RxD
4	GND	5	GND
6	RxD	3	TxD
7	DCD	4	DTR
8	NC	7	RTS

Connect the EX4000 Switch to External Devices

IN THIS SECTION

- Connect a Device to a Network for Out-of-Band Management | **239**
- Connect a Device to a Management Console Using an RJ-45 Connector | **240**

Connect a Device to a Network for Out-of-Band Management

Ensure that you have an Ethernet cable that has an RJ-45 connector at either end.

Figure 120: RJ-45 Connector on an Ethernet Cable

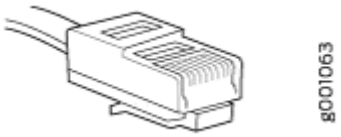

You can monitor and manage a network device, such as a router or a switch, by using a dedicated management channel. Each device has a management port to which you can connect an Ethernet cable with an RJ-45 connector. Use the management port to connect the device to the management device.

To connect a device to a network for out-of-band management:

1. Connect one end of the Ethernet cable to the management port on the device.
2. Connect the other end of the Ethernet cable to the management device.

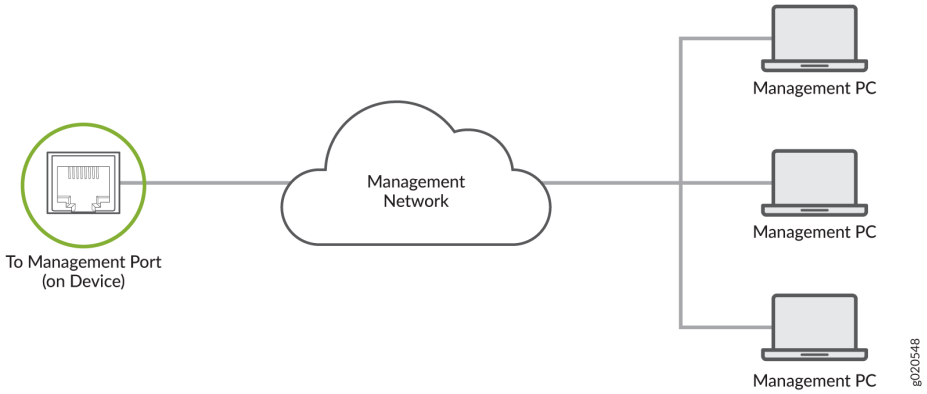

Connect a Device to a Management Console Using an RJ-45 Connector

Ensure that you have an Ethernet cable that has an RJ-45 connector at either end and an RJ-45-to-DB-9 serial port adapter.

Figure 121: RJ-45 Connector on an Ethernet Cable

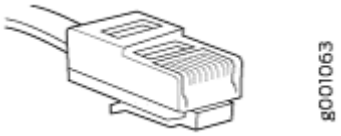

NOTE: We no longer include the RJ-45 console cable with the DB-9 adapter as part of the device package. If the console cable and adapter are not included in your device package, or if you need a different type of adapter, you can order the following separately:

- RJ-45 to DB-9 adapter (JNP-CBL-RJ45-DB9)
- RJ-45 to USB-A adapter (JNP-CBL-RJ45-USBA)

If you want to use RJ-45 to USB-A you must have X64 (64-Bit) Virtual COM port (VCP) driver installed on your PC. See https://ftdichip.com/drivers/vcp-drivers/ to download the driver.

NOTE: If your laptop or desktop PC does not have a DB-9 plug connector pin and you want to connect your laptop or desktop PC directly to the device, use a combination of the RJ-45-to-DB-9 socket adapter and a USB-to-DB-9 plug adapter. You must provide the USB-to-DB-9 plug adapter.

You can configure and manage your network devices using a dedicated management channel. Each device has a console port that you can connect to using an Ethernet cable with an RJ-45 connector. Use the console port to connect the device to the console server or management console. The console port accepts a cable that has an RJ-45 connector.

To connect the device to a management console:

1. Connect one end of the Ethernet cable to the console port (labeled **CON**, **CONSOLE**, or **CON1**) on the device.
2. Connect the other end of the Ethernet cable to the console server (see Figure 122 on page 241) or management console (seeFigure 123 on page 242).

Figure 122: Connect a Device to a Management Console Through a Console Server

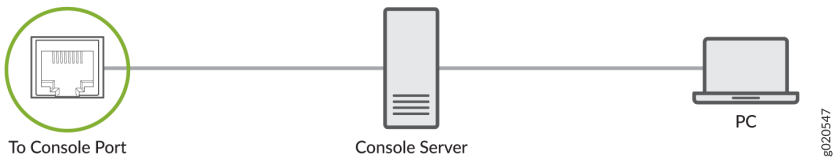

Figure 123: Connect a Device Directly to a Management Console



Connect the EX4000 Switch to the Network

IN THIS SECTION

- Install a Transceiver | 242
- Connect a Fiber-Optic Cable | 245

Install a Transceiver

Before you install a transceiver in a device, ensure that you have taken the necessary precautions for safe handling of lasers (see Laser and LED Safety Guidelines and Warnings).

Ensure that you have a rubber safety cap available to cover the transceiver.

The transceivers for Juniper Networks devices are hot-removable and hot-insertable field-replaceable units (FRUs). You can remove and replace the transceivers without powering off the device or disrupting the device functions.

NOTE: After you insert a transceiver or after you change the media-type configuration, wait for 6 seconds for the interface to display operational commands.

NOTE: We recommend that you use only optical transceivers and optical connectors purchased from Juniper Networks with your Juniper Networks device.

CAUTION: The Juniper Networks Technical Assistance Center (JTAC) provides complete support for Juniper-supplied optical modules and cables. However, JTAC does not provide support for third-party optical modules and cables that are not qualified or supplied by Juniper Networks. If you face a problem running a Juniper device that uses third-party optical modules or cables, JTAC may help you diagnose host-related issues if the observed issue is not, in the opinion of JTAC, related to the use of the third-party optical modules or cables. Your JTAC engineer will likely request that you check the third-party optical module or cable and, if required, replace it with an equivalent Juniper-qualified component.

Use of third-party optical modules with high-power consumption (for example, coherent ZR or ZR+) can potentially cause thermal damage to or reduce the lifespan of the host equipment. Any damage to the host equipment due to the use of third-party optical modules or cables is the users' responsibility. Juniper Networks will accept no liability for any damage caused due to such use.

To install a transceiver:

CAUTION: To prevent electrostatic discharge (ESD) damage to the transceiver, do not touch the connector pins at the end of the transceiver.

1. Wrap and fasten one end of the ESD wrist strap around your bare wrist, and connect the other end of the strap to a site ESD point or to the ESD point on the device.
2. Remove the transceiver from its bag.
3. Check to see whether the transceiver is covered with a rubber safety cap. If it is not, cover the transceiver with a rubber safety cap.

   LASER WARNING: Do not leave a fiber-optic transceiver uncovered except when inserting or removing a cable. The rubber safety cap keeps the port clean and protects your eyes from accidental exposure to laser light.

4. If the port in which you want to install the transceiver is covered with a dust cover, remove the dust cover and save it in case you need to cover the port later. If you are hot-swapping a transceiver, wait for at least 10 seconds after removing the transceiver from the port before installing a new transceiver.

5. Using both hands, carefully place the transceiver in the empty port. The connectors must face the chassis.

   CAUTION: Before you slide the transceiver into the port, ensure that the transceiver is aligned correctly. Misalignment might cause the pins to bend, making the transceiver unusable.

6. Slide the transceiver in gently until it is fully seated. If you are installing a CFP transceiver, use your fingers to tighten the captive screws on the transceiver.
7. Remove the rubber safety cap from the transceiver and the end of the cable, and insert the cable into the transceiver.

   LASER WARNING: Do not look directly into a fiber-optic transceiver or into the ends of fiber-optic cables. Fiber-optic transceivers and fiber-optic cable connected to a transceiver emit laser light that can damage your eyes.

   CAUTION: Do not leave a fiber-optic transceiver uncovered except when inserting or removing cable. The safety cap keeps the port clean and protects your eyes from accidental exposure to laser light.

8. If there is a cable management system, arrange the cable in the cable management system to prevent the cable from dislodging or developing stress points. Secure the cable so that it does not support its own weight as it hangs toward the floor. Place excess cable out of the way in a neatly coiled loop in the cable management system. Placing fasteners on the loop helps to maintain its shape.

   CAUTION: Do not let fiber-optic cable hang free from the connector. Do not allow fastened loops of cable to dangle, which stresses the cable at the fastening point.

   CAUTION: Avoid bending the fiber-optic cable beyond its minimum bend radius. An arc smaller than a few inches in diameter can damage the cable and cause problems that are difficult to diagnose.

   NOTE: Make sure to use a dust cap to cover ports that are unused.

Connect a Fiber-Optic Cable

Before you connect a fiber-optic cable to an optical transceiver installed in a device, ensure that you have taken the necessary precautions for safe handling of lasers (see Laser and LED Safety Guidelines and Warnings).

To connect a fiber-optic cable to an optical transceiver installed in a device:

> **LASER WARNING**: Do not look directly into a fiber-optic transceiver or into the ends of fiber-optic cables. Fiber-optic transceivers and fiber-optic cables connected to transceivers emit laser light that can damage your eyes.

1. If the fiber-optic cable connector is covered with a rubber safety cap, remove the cap. Save the cap.
2. Remove the rubber safety cap from the optical transceiver. Save the cap.
3. Insert the cable connector into the optical transceiver.

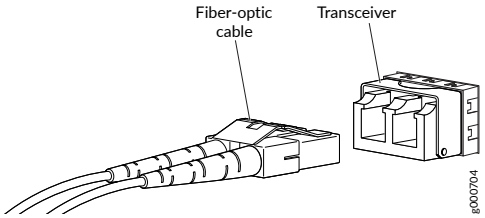

4. Secure the cables so that they do not support their own weight. Place excess cable out of the way in a neatly coiled loop. Placing fasteners on a loop helps cables maintain their shape.

> **CAUTION**: Do not bend fiber-optic cables beyond their minimum bend radius. An arc smaller than a few inches in diameter can damage the cables and cause problems that are difficult to diagnose.
>
> Do not let fiber-optic cables hang free from the connector. Do not allow fastened loops of cables to dangle, which stresses the cables at the fastening point.

Maintain Fiber-Optic Cables

IN THIS SECTION

- Connect a Fiber-Optic Cable | 246
- Disconnect a Fiber-Optic Cable | 247
- How to Handle Fiber-Optic Cables | 248

Connect a Fiber-Optic Cable

Before you connect a fiber-optic cable to an optical transceiver installed in a device, ensure that you have taken the necessary precautions for safe handling of lasers (see Laser and LED Safety Guidelines and Warnings).

To connect a fiber-optic cable to an optical transceiver installed in a device:

LASER WARNING: Do not look directly into a fiber-optic transceiver or into the ends of fiber-optic cables. Fiber-optic transceivers and fiber-optic cables connected to transceivers emit laser light that can damage your eyes.

1. If the fiber-optic cable connector is covered with a rubber safety cap, remove the cap. Save the cap.
2. Remove the rubber safety cap from the optical transceiver. Save the cap.
3. Insert the cable connector into the optical transceiver.

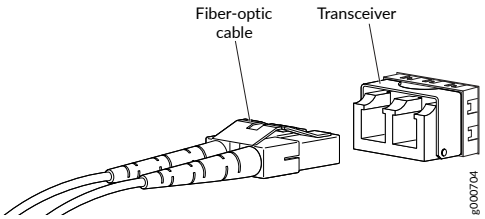

4. Secure the cables so that they do not support their own weight. Place excess cable out of the way in a neatly coiled loop. Placing fasteners on a loop helps cables maintain their shape.

CAUTION: Do not bend fiber-optic cables beyond their minimum bend radius. An arc smaller than a few inches in diameter can damage the cables and cause problems that are difficult to diagnose.

Do not let fiber-optic cables hang free from the connector. Do not allow fastened loops of cables to dangle, which stresses the cables at the fastening point.

Disconnect a Fiber-Optic Cable

Before you disconnect a fiber-optic cable from an optical transceiver, ensure that you have taken the necessary precautions for safe handling of lasers. See *Laser and LED Safety Guidelines and Warnings*.

Ensure that you have the following parts and tools available:

- A rubber safety cap to cover the transceiver
- A rubber safety cap to cover the fiber-optic cable connector

Juniper Networks devices have optical transceivers to which you can connect fiber-optic cables.

To disconnect a fiber-optic cable from an optical transceiver installed in the device:

1. Disable the port in which the transceiver is installed by issuing the following command:

```
[edit interfaces]
user@device# set interface-name disable
```

LASER WARNING: Do not look directly into a fiber-optic transceiver or into the ends of fiber-optic cables. Fiber-optic transceivers and fiber-optic cables connected to transceivers emit laser light that can damage your eyes.

2. Carefully unplug the fiber-optic cable connector from the transceiver.
3. Cover the transceiver with a rubber safety cap.

LASER WARNING: Do not leave a fiber-optic transceiver uncovered except when inserting or removing a cable. The rubber safety cap keeps the port clean and protects your eyes from accidental exposure to laser light.

4. Cover the fiber-optic cable connector with the rubber safety cap.

How to Handle Fiber-Optic Cables

Fiber-optic cables connect to optical transceivers that are installed in Juniper Networks devices.

Follow these guidelines when handling fiber-optic cables:

- When you unplug a fiber-optic cable from a transceiver, place rubber safety caps over the transceiver and on the end of the cable.
- Anchor fiber-optic cables to prevent stress on the connectors. When attaching a fiber-optic cable to a transceiver, be sure to secure the fiber-optic cable so that it does not support its own weight as it hangs to the floor. Never let a fiber-optic cable hang free from the connector.
- Avoid bending the fiber-optic cables beyond their minimum bend radius. Bending fiber-optic cables into arcs smaller than a few inches in diameter can damage the cables and cause problems that are difficult to diagnose.
- Frequent plugging and unplugging of fiber-optic cables in and out of optical instruments can damage the instruments, which are expensive to repair. To prevent damage from overuse, attach a short fiber extension to the optical equipment. The short fiber extension absorbs wear and tear due to frequent plugging and unplugging. Replacing the short fiber extension is easier and cost efficient compared with replacing the instruments.
- Keep fiber-optic cable connections clean. Microdeposits of oil and dust in the canal of the transceiver or cable connector can cause loss of light, reduction in signal power, and possibly intermittent problems with the optical connection.
  - To clean the transceiver canal, use an appropriate fiber-cleaning device such as RIFOCS Fiber Optic Adaptor Cleaning Wands (part number 946). Follow the instructions in the cleaning kit you use.
  - After cleaning the transceiver, make sure that the connector tip of the fiber-optic cable is clean. Use only an approved alcohol-free fiber-optic cable cleaning kit such as the Opptex Cletop-S®Fiber Cleaner. Follow the instructions in the cleaning kit you use.

Maintain Transceivers

IN THIS SECTION

Remove a Transceiver | 249

Install a Transceiver | 250

Remove a Transceiver

Before you remove a transceiver from a device, ensure that you have taken the necessary precautions for the safe handling of lasers (see Laser and LED Safety Guidelines and Warnings).

Ensure that you have the following parts and tools available:

- An antistatic bag or an antistatic mat
- Rubber safety caps to cover the transceiver and fiber-optic cable connector
- A dust cover to cover the port or a replacement transceiver

The transceivers for Juniper Networks devices are hot-removable and hot-insertable field-replaceable units (FRUs). You can remove and replace the transceivers without powering off the device or disrupting device functions.

NOTE: After you remove a transceiver, or when you change the media-type configuration, wait for 6 seconds for the interface to display the operational commands.

To remove a transceiver from a device:

1. Place the antistatic bag or antistatic mat on a flat, stable surface.
2. Wrap and fasten one end of the ESD wrist strap around your bare wrist, and connect the other end of the strap to the ESD point on the rack.
3. Label the cable connected to the transceiver so that you can reconnect it correctly.

LASER WARNING: Do not look directly into a fiber-optic transceiver or into the ends of fiber-optic cables. Fiber-optic transceivers and fiber-optic cables connected to transceivers emit laser light that can damage your eyes.

LASER WARNING: Do not leave a fiber-optic transceiver uncovered except when inserting or removing a cable. The rubber safety cap keeps the port clean and protects your eyes from accidental exposure to laser light.

> ⚠ **CAUTION**: Do not bend fiber-optic cables beyond their minimum bend radius. An arc smaller than a few inches in diameter can damage the cables and cause problems that are difficult to diagnose.

4. Remove the cable connected to the transceiver (see Disconnect a Fiber-Optic Cable). Cover the transceiver and the end of each fiber-optic cable connector with a rubber safety cap immediately after disconnecting the fiber-optic cables.
5. If there is a cable management system, arrange the cable in the cable management system to prevent it from dislodging or developing stress points. Secure the cable so that it does not support its own weight as it hangs to the floor. Place excess cable out of the way in a neatly coiled loop in the cable management system. Placing fasteners on the loop helps to maintain its shape.
6. To remove a transceiver:
   a. Using your fingers, pull open the ejector lever on the transceiver to unlock the transceiver.

      > ⚠ **CAUTION**: Before removing the transceiver, make sure that you open the ejector lever completely until you hear it click. This precaution prevents damage to the transceiver.

   b. Grasp the transceiver ejector lever and gently slide the transceiver approximately 0.5 in. (1.3 cm) straight out of the port.

      > ⚠ **CAUTION**: To prevent ESD damage to the transceiver, do not touch the connector pins at the end of the transceiver.

7. Using your fingers, grasp the body of the transceiver and pull it straight out of the port.
8. Place the transceiver in the antistatic bag or on the antistatic mat placed on a flat, stable surface.
9. Place the dust cover over the empty port, or install the replacement transceiver.

Install a Transceiver

Before you install a transceiver in a device, ensure that you have taken the necessary precautions for safe handling of lasers (see Laser and LED Safety Guidelines and Warnings).

Ensure that you have a rubber safety cap available to cover the transceiver.

The transceivers for Juniper Networks devices are hot-removable and hot-insertable field-replaceable units (FRUs). You can remove and replace the transceivers without powering off the device or disrupting the device functions.

NOTE: After you insert a transceiver or after you change the media-type configuration, wait for 6 seconds for the interface to display operational commands.

NOTE: We recommend that you use only optical transceivers and optical connectors purchased from Juniper Networks with your Juniper Networks device.

CAUTION: The Juniper Networks Technical Assistance Center (JTAC) provides complete support for Juniper-supplied optical modules and cables. However, JTAC does not provide support for third-party optical modules and cables that are not qualified or supplied by Juniper Networks. If you face a problem running a Juniper device that uses third-party optical modules or cables, JTAC may help you diagnose host-related issues if the observed issue is not, in the opinion of JTAC, related to the use of the third-party optical modules or cables. Your JTAC engineer will likely request that you check the third-party optical module or cable and, if required, replace it with an equivalent Juniper-qualified component.

Use of third-party optical modules with high-power consumption (for example, coherent ZR or ZR+) can potentially cause thermal damage to or reduce the lifespan of the host equipment. Any damage to the host equipment due to the use of third-party optical modules or cables is the users' responsibility. Juniper Networks will accept no liability for any damage caused due to such use.

To install a transceiver:

CAUTION: To prevent electrostatic discharge (ESD) damage to the transceiver, do not touch the connector pins at the end of the transceiver.

1. Wrap and fasten one end of the ESD wrist strap around your bare wrist, and connect the other end of the strap to a site ESD point or to the ESD point on the device.
2. Remove the transceiver from its bag.
3. Check to see whether the transceiver is covered with a rubber safety cap. If it is not, cover the transceiver with a rubber safety cap.

LASER WARNING: Do not leave a fiber-optic transceiver uncovered except when inserting or removing a cable. The rubber safety cap keeps the port clean and protects your eyes from accidental exposure to laser light.

4. If the port in which you want to install the transceiver is covered with a dust cover, remove the dust cover and save it in case you need to cover the port later. If you are hot-swapping a transceiver, wait for at least 10 seconds after removing the transceiver from the port before installing a new transceiver.
5. Using both hands, carefully place the transceiver in the empty port. The connectors must face the chassis.

   CAUTION: Before you slide the transceiver into the port, ensure that the transceiver is aligned correctly. Misalignment might cause the pins to bend, making the transceiver unusable.

6. Slide the transceiver in gently until it is fully seated.
7. Remove the rubber safety cap from the transceiver and the end of the cable, and insert the cable into the transceiver.

   LASER WARNING: Do not look directly into a fiber-optic transceiver or into the ends of fiber-optic cables. Fiber-optic transceivers and fiber-optic cable connected to a transceiver emit laser light that can damage your eyes.

   CAUTION: Do not leave a fiber-optic transceiver uncovered except when inserting or removing cable. The safety cap keeps the port clean and protects your eyes from accidental exposure to laser light.

8. If there is a cable management system, arrange the cable in the cable management system to prevent the cable from dislodging or developing stress points. Secure the cable so that it does not support its own weight as it hangs toward the floor. Place excess cable out of the way in a neatly coiled loop in the cable management system. Placing fasteners on the loop helps to maintain its shape.

   CAUTION: Do not let fiber-optic cable hang free from the connector. Do not allow fastened loops of cable to dangle, which stresses the cable at the fastening point.

   CAUTION: Avoid bending the fiber-optic cable beyond its minimum bend radius. An arc smaller than a few inches in diameter can damage the cable and cause problems that are difficult to diagnose.

   NOTE: Make sure to use a dust cap to cover ports that are unused.