Juniper Networks | Engineering Simplicity

EX4100-H Switch Hardware Guide

Published
2025-02-09

Juniper Networks, Inc.
1133 Innovation Way
Sunnyvale, California 94089
USA
408-745-2000
www.juniper.net

Juniper Networks, the Juniper Networks logo, Juniper, and Junos are registered trademarks of Juniper Networks, Inc. in the United States and other countries. All other trademarks, service marks, registered marks, or registered service marks are the property of their respective owners.

Juniper Networks assumes no responsibility for any inaccuracies in this document. Juniper Networks reserves the right to change, modify, transfer, or otherwise revise this publication without notice.

EX4100-H Switch Hardware Guide
Copyright © 2025 Juniper Networks, Inc. All rights reserved.

The information in this document is current as of the date on the title page.

YEAR 2000 NOTICE

Juniper Networks hardware and software products are Year 2000 compliant. Junos OS has no known time-related limitations through the year 2038. However, the NTP application is known to have some difficulty in the year 2036.

END USER LICENSE AGREEMENT

The Juniper Networks product that is the subject of this technical documentation consists of (or is intended for use with) Juniper Networks software. Use of such software is subject to the terms and conditions of the End User License Agreement ("EULA") posted at https://support.juniper.net/support/eula/. By downloading, installing or using such software, you agree to the terms and conditions of that EULA.

Table of Contents

About This Guide | ix

1 Fast Track: Initial Installation

Fast Track to Rack Installation and Power | 2

- Mount an EX4100-H-12MP Switch in a Desktop Orientation or Flat Surface Within a Cabinet | 2
- Connect the EX4100-H-12MP to Power | 4

Claim, Onboard, and Configure EX4100-H | 13

2 System Overview and Specifications

EX4100-H System Overview | 16

- EX4100-H Ethernet Switch | 16
- Mounting Options for EX4100-H Switches | 21

EX4100-H Models and Specifications | 23

EX4100-H Chassis | 27

- Chassis Physical Specifications for EX4100-H Switches | 28
- Chassis Status LEDs on EX4100-H Switches | 31
- LEDs on the Management Port on EX4100-H Switches | 33
- PSU Status LEDs on the Switch Chassis | 35
- LEDs on the RJ-45 Network Ports, Virtual Chassis Ports, and Uplink Ports on EX4100-H Switches | 36
- Dry Contact Alarm LEDs | 40

EX4100-H Power System | 42

- AC Power Supply Unit in EX4100-H Switches | 42
- DC PSU in EX4100-H Switches | 48
- Power Supply LEDs in EX4100-H Switches | 51

3 Site Planning and Preparation

Site Preparation Checklist for EX4100-H Switches | 55

EX4100-H Site Guidelines and Requirements | 57

Environmental Requirements and Specifications for EX4100-H Switches | **57**

General Site Guidelines | **61**

Site Electrical Wiring Guidelines | **61**

Cabinet Requirements for EX4100-H Switches | **62**

Clearance Requirements for Airflow and Hardware Maintenance for EX4100-H Switches | **64**

EX4100-H Network Cable and Transceiver Planning | 67

Pluggable Transceivers and Cables Supported on EX4100-H Switches | **67**

SFP+ Direct Attach Copper Cables for EX Series Switches | **68**

Overview of EX Series Switches: Fiber-Optic Cable Signal Loss, Attenuation, and Dispersion | **71**

Calculate the Fiber-Optic Cable Power Budget for EX Series Devices | **72**

Calculating the Fiber-Optic Cable Power Margin for EX Series Devices | **73**

EX4100-H Management Cable Specifications and Pinouts | 75

Management Cable Specifications | **75**

Console Port Connector Pinout Information | **76**

USB Port Specifications for an EX Series Switch | **77**

RJ-45 Management Port Connector Pinout Information | **78**

RJ-45 Port, SFP Port, and SFP+ Port Connector Pinouts | **79**

RJ-45 to DB-9 Serial Port Adapter Pinout Information | **83**

4 **Installation and Configuration**

Install the EX4100-H Switch | 85

Unpack the EX4100-H Switch | **85**

Packing List for an EX4100-H Switch | **86**

Update Base Installation Data | **87**

Mount an EX4100-H-12MP Switch Using Rack Mount Kit (with DIN Rail) Within a Cabinet | **88**

Mount an EX4100-H-12MP Switch Using Rack Mount Kit (Fixed) Within a Cabinet | **92**

Mount an EX4100-H-12MP Switch on a Ferrous Wall or Surface Using Magnet Pads Within a Cabinet | **95**

Mount an EX4100-H-12MP Switch in a Desktop Orientation or on a Flat Surface Within a Cabinet | **101**

Mount an EX4100-H-12MP Switch Using DIN Rail Mount Kit Within a Cabinet | **103**

Unmounting an EX4100-H-12MP Switch from a DIN Rail Within a Cabinet | **106**

Mount an EX4100-H-12MP Switch on a Wall Within a Cabinet | **107**

Mount an EX4100-H Switch on Four Posts in a Rack or Cabinet | **112**

Attaching the Physical Security Lock | **116**

Connect the EX4100-H to Power | 119

Connect Earth Ground to an EX4100-H-12MP Switch | **120**

Connect Power to an EX4100-H-12MP Switch | **123**

Connect the EX4100-H Switch to External Devices | 131

Connect a Device to a Network for Out-of-Band Management | **131**

Connect a Device to a Management Console Using an RJ-45 Connector | **132**

Connect an EX4100-H Switch to a Management Console Using the USB Type-C Console Port | **134**

Connect the EX4100-H Switch to the Network | 135

Install a Transceiver | **135**

Connect a Fiber-Optic Cable | **138**

Configure Junos OS on an EX4100-H Switch | 139

EX4100-H Default Configuration | **140**

Connect and Configure an EX4100-H Switch | **145**

Revert to the Default Factory Configuration on an EX Series Switch | **150**

Revert to the EX Series Switch Factory-Default Configuration Using the `request system zeroize` Command | **151**

Revert to the EX Series Switch Factory-Default Configuration Using the `load factory-default` Command | **152**

Revert to the Factory-Default Configuration Using the Factory Reset/Port Mode button | **153**

Rebooting/restarting the device using the Reset Pin-hole Button | **154**

5 **Maintain Components**

Maintain Transceivers | 156

Remove a Transceiver | **156**

Install a Transceiver | **158**

Maintain Fiber-Optic Cables | 161

Connect a Fiber-Optic Cable | **162**

Disconnect a Fiber-Optic Cable | **162**

How to Handle Fiber-Optic Cables | **163**

Install or Remove Power Supplies | 164

Install Power Supply Units in an EX4100-H-24MP or EX4100-H-24F Switch | **165**

Remove Power Supply Units in an EX4100-H-24MP or EX4100-H-24F Switch | **165**

6 **Troubleshoot Hardware**

Troubleshoot the EX4100-H Components | 168

Chassis Component Alarm Conditions on EX4100-H Switches | **168**

Troubleshoot Temperature Alarms in EX4100-H Series Switches | **171**

EX4100-H Switch Hardware and CLI Terminology Mapping | **175**

7 **Contact Customer Support and Return the Chassis or Components**

Return an EX4100-You can identify the external 340 W AC PSUH Chassis or Component | 181

How to Return an EX4100-H Switch or Component for Repair or Replacement | **181**

Locate the Serial Number on an EX4100-H Switch or Component | **182**

List the Switch and Components Details with the CLI | **182**

Locate the Chassis Serial Number ID Label on an EX4100-H Switch | **186**

Locate the Serial Number ID Labels on external PSUs of an EX4100-H Switch | **187**

Contact Customer Support to Obtain a Return Material Authorization | **188**

Pack an EX4100-H Switch or Component for Shipping | **189**

Pack an EX4100-H Switch for Shipping | **190**

Pack EX4100-H Switch Components for Shipping | **191**

8

Safety and Compliance Information

Safety Information for EX4100-H | 194

AC Power Electrical Safety Guidelines | 194

General Laser Safety Guidelines | 194

General Safety Guidelines and Warnings | 195

Laser LED Safety Guidelines | 197

Multiple Power Supplies Disconnection Warning | 198

Qualified Personnel Warning | 198

Restricted Access Warning | 199

TN Power Warning | 200

Hazardous Area Installation Warning | 200

General Electrical Safety Guidelines and Warnings | 201

Definitions of Safety Warning Levels | 202

Qualified Personnel Warning | 204

Warning Statement for Norway and Sweden | 205

Fire Safety Requirements | 205

Installation Instructions Warning | 206

Chassis and Component Lifting Guidelines | 207

Restricted Access Warning | 208

Ramp Warning | 209

Cabinet-Mounting Warnings | 210

Grounded Equipment Warning | 214

Radiation from Open Port Apertures Warning | 215

Laser and LED Safety Guidelines and Warnings | 216

Maintenance and Operational Safety Guidelines and Warnings | 218

Action to Take After an Electrical Accident | 224

Prevention of Electrostatic Discharge Damage | 224

Compliance Standards for EX4100-H Switches | 226

Compliance Statements for EMC Requirements for EX Series Switches | 229

Statements of Volatility for Juniper Network Devices | 233

About This Guide

Use this guide to install hardware and perform initial software configuration, routine maintenance, and troubleshooting for the EX4100-H switch. After completing the installation and basic configuration procedures covered in this guide, refer to the Junos OS documentation for information about further software configuration.

1

CHAPTER

Fast Track: Initial Installation

IN THIS CHAPTER

- Fast Track to Rack Installation and Power | **2**
- Claim, Onboard, and Configure EX4100-H | **13**

Fast Track to Rack Installation and Power

SUMMARY

This procedure guides you through the simplest steps for the most common installation to mount your EX4100-H switch and connect it to power. Have more complex installation needs? See "Install the EX4100-H Switch" on page 85

IN THIS SECTION

- Mount an EX4100-H-12MP Switch in a Desktop Orientation or Flat Surface Within a Cabinet | **2**
- Connect the EX4100-H-12MP to Power | **4**

Mount an EX4100-H-12MP Switch in a Desktop Orientation or Flat Surface Within a Cabinet

Desktop mounting is the default mounting option for the EX4100-H-12MP switch. For the rest of the mounting options, refer "Install the EX4100-H Switch" on page 85.

CAUTION:

1. The EX4100-H-12MP with AC/DC PSU must be installed in IP 54 or NEMA 4 enclosure for all outdoor/non-office installation. EX4100-H-12MP switch must be installed in cabinet or enclosure whether the switch is installed outdoor or indoor.
2. The system and the PSU or PSUs must be installed in a suitable enclosure to prevent any personal injury due to access to live parts. The enclosure shall be accessible by using a tool. The access to EX4100-H-12MP shall be restricted access only.
3. Only skilled person shall be allowed to connect/do the wiring of the PSU to the Mains.
4. In all mounting options, the cables shall be routed and held in position with suitable cable organizer/holder, so that cables do not hang from the switch/PSU which can accidentally pull down the unit.
5. When the switch is installed in a cabinet, the temperature within the cabinet is greater than the room temperature outside the cabinet. Ensure the temperature

inside the cabinet and around the switch conforms to device specification detailed in Table 28 on page 60.

6. Footpads are preassembled onto the bottom of switch and PSU. For desktop mounting within a cabinet, do not unassemble the footpads, because using the footpads is mandatory.

You can mount the switch and the external PSU on a desk or any other level surface within a cabinet. The surface should be flat or level and not be an inclined surface or area. Note that you can connect the EX4100-H-12MP switch to any one of the following:

- One external AC PSU
- One external DC PSU
- Two external AC PSUs
- Two external DC PSUs
- One external AC PSU and one external DC PSU

NOTE: Allow sufficient space of 2 in. all around the switch for cooling. Insufficient space can lead to overheating of the switch chassis.

1. Place the switch and the PSU on a flat surface or a desk within a cabinet.
2. Connect to power. See "Connect the EX4100-H-12MP to Power" on page 4

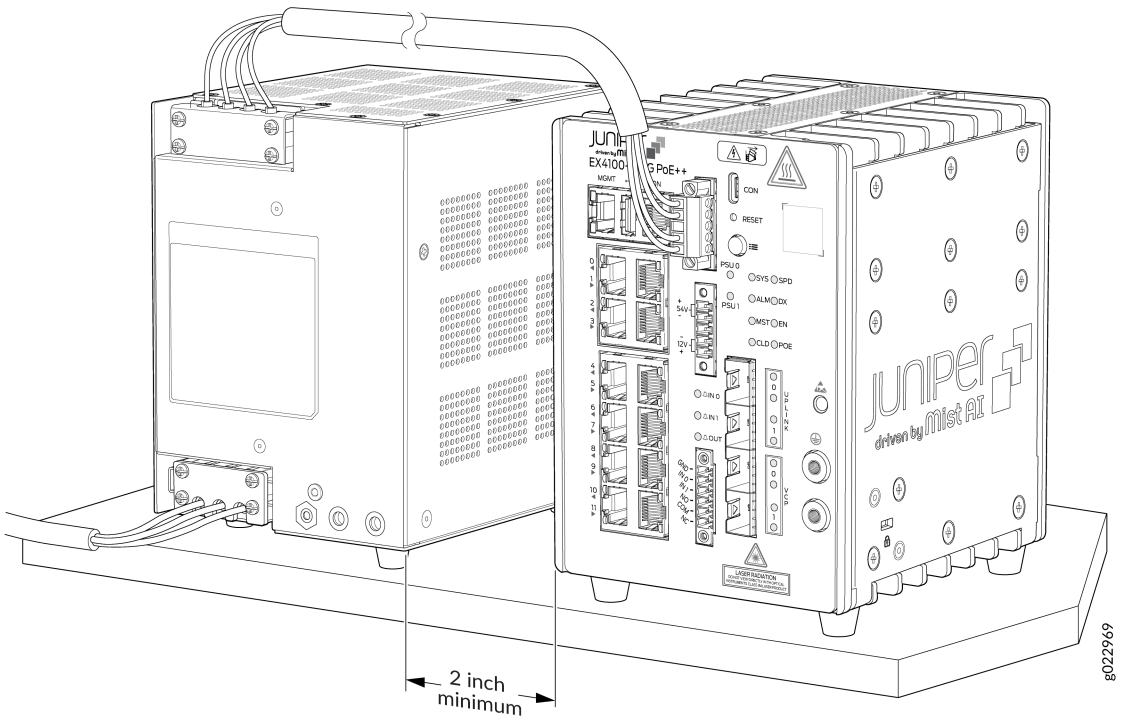

Connect the EX4100-H-12MP to Power

IN THIS SECTION

- Ground the EX4100-H-12MP Switch and the External PSU | 5
- Connect the Input Power Cable and Power On the Switch | 6

To connect the EX4100-H-12MP switch to AC and/or DC power, perform the following tasks:

NOTE: To ensure proper operation and to meet safety and electromagnetic interference (EMI) requirements, you must connect the EX4100-H switch to earth ground and the external PSUs (for EX4100-H-12MP) to earth ground before you connect power to the switch.

EX4100-H-12MP switches and their external PSUs have a two-hole protective grounding terminal. We recommend that you use the chassis protective grounding terminal as the only method for grounding the chassis regardless of the power supply configuration. However, if additional grounding methods are available, you can also use those methods additionally. For example, on the PSU, you can connect the PE (grounding symbol) mark terminal of the terminal block to the input grounding wire in the power cord of the input power cable. This system was tested to meet or exceed all applicable EMC regulatory requirements with the chassis protective grounding terminal connected correctly.

Ground the EX4100-H-12MP Switch and the External PSU

To ground the EX4100-H-12MP switch and the external PSU, perform the following steps:

1. To ground the switch, connect one end of the grounding cable to a proper earth ground, such as the cabinet in which the switch is mounted.
2. Place the grounding lug attached to the grounding cable over the protective earthing terminal on the front panel.

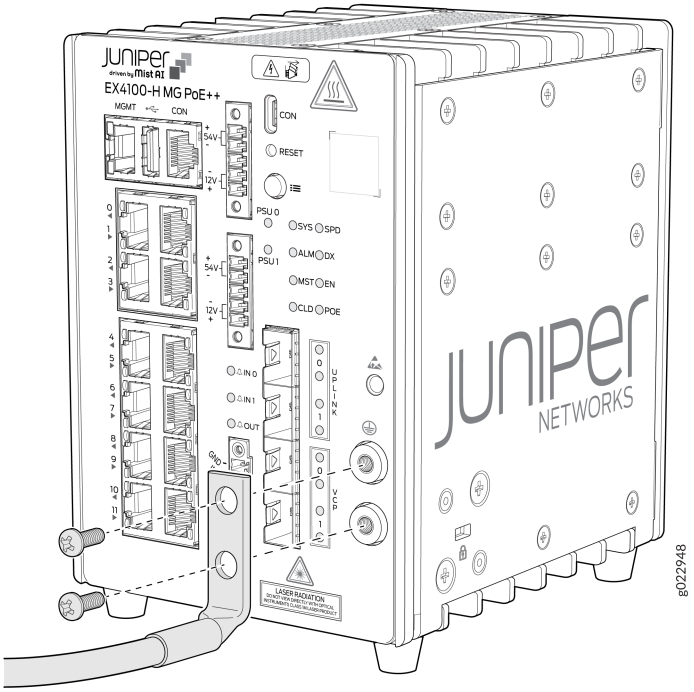

3. Secure the grounding lug to the protective earthing terminal with the screws. Ensure that the grounding cable does not touch or block access to other switch components.

4. To ground the PSU, connect one end of the grounding cable to a proper earth ground, such as the cabinet in which the PSU is mounted.

5. Place the grounding lug attached to the grounding cable over the protective earthing terminal on the front panel of the PSU.

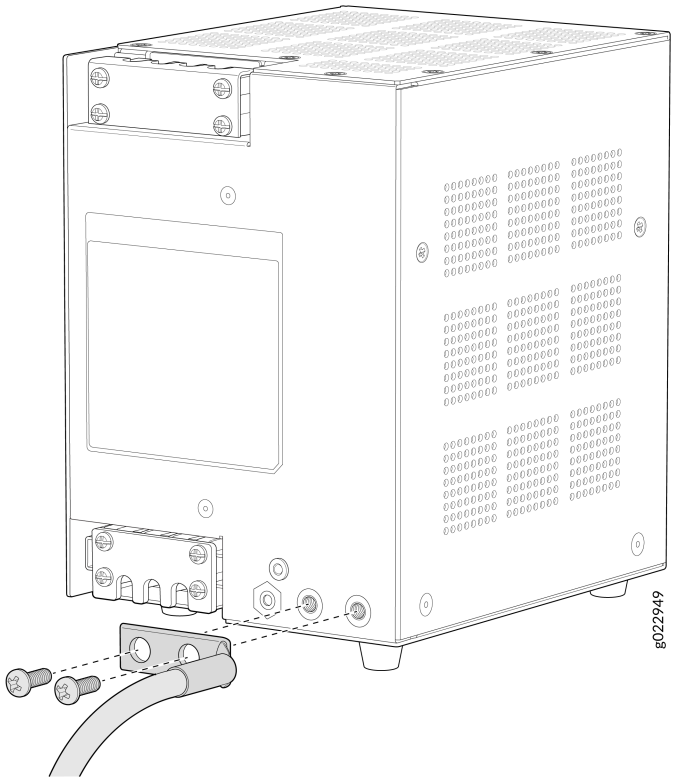

6. Secure the grounding lug to the protective earthing terminal of the PSU with the screws. Ensure the grounding cable does not touch or block access to other PSU components.

NOTE: To attach grounding lug to the switch and PSU you use screwdriver type - Phillips #2 and torque is 22 +/-0.5 lb.in

Connect the Input Power Cable and Power On the Switch

For information about the supported AC power cord specifications, see Table 21 on page 46.

CAUTION:

- You must keep the power source switched off before starting this procedure and switch it on only after completing this procedure.
- Only skilled persons shall be allowed to connect or do the wiring of PSU to Mains.
- PSU output connections to switch and PSU inlet connections **should not be done** when the AC/DC power cord is connected to the main source.
- Connect the AC PSU to AC mains through a 2-hole circuit breaker rated at 16 A or as per local code.

To connect the input power cable:

1. Remove the protective terminal cover from the PSU input power terminal.

> **NOTE**: An initial batch of PSUs were shipped with torx screws (hexagonal shaped screws) for the protective terminal covers (input and output) of the PSU. If using a PSU with this type of screw; to install or remove the protective terminal covers from the PSU you use screwdriver type Torx 10 with torque 3.5 lb.in

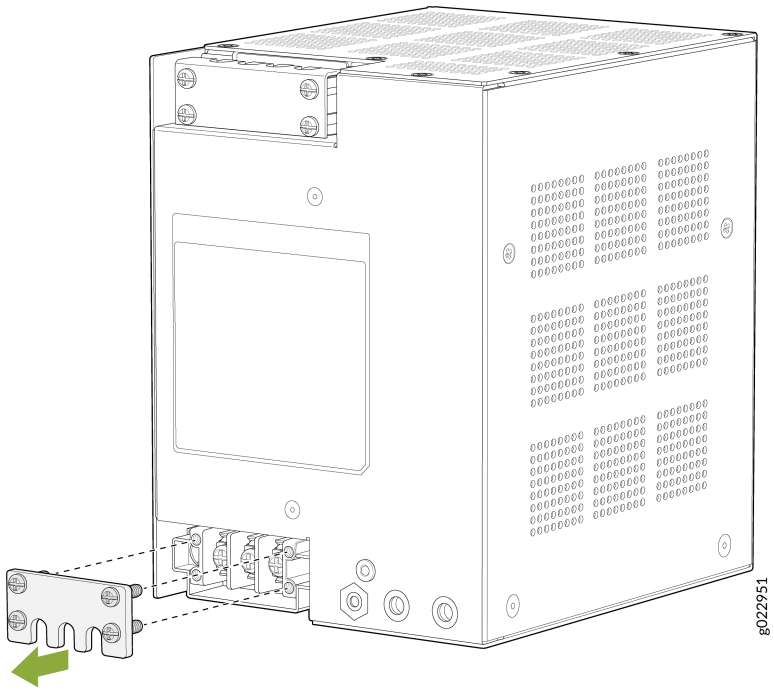

2. Insert the power cord wires of the power source into the power terminal inputs of the PSU. You can connect the EX4100-H-12MP switch to any one of the following:

- One external AC PSU
- One external DC PSU
- Two external AC PSUs
- Two external DC PSUs
- One external AC PSU and one external DC PSU

On an AC PSU input, the power terminals are marked as L, N, PE (grounding symbol). On a DC PSU input, the power terminals are marked as +, -, and PE (grounding symbol). Always insert the grounding wire or protective earth (PE) power cord wire into the PE input power terminal first. For an AC PSU, insert the line, single phase (L) power cord wire and neutral (N) power cord wire into the L and N input power terminals respectively. For a DC PSU, insert + power cord wire and - power cord wire into the + and - input power terminals respectively.

NOTE: Use Phillips #2 screwdriver with torque 6 lb.in

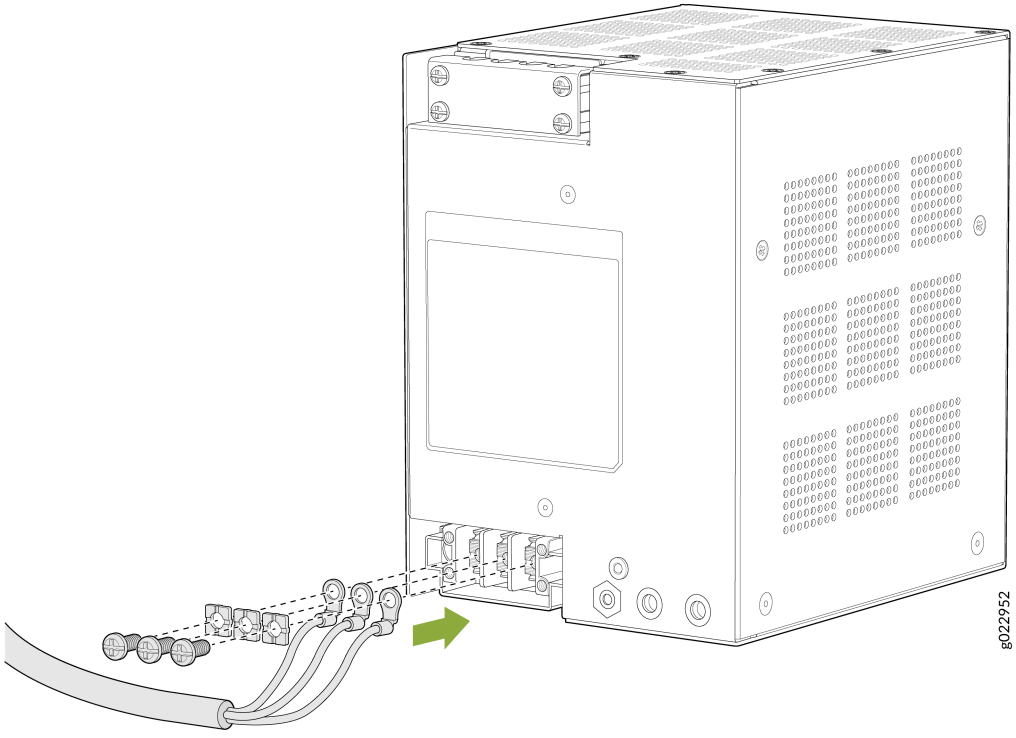

3. Secure the protective terminal cover with the screws over the PSU input power terminal.

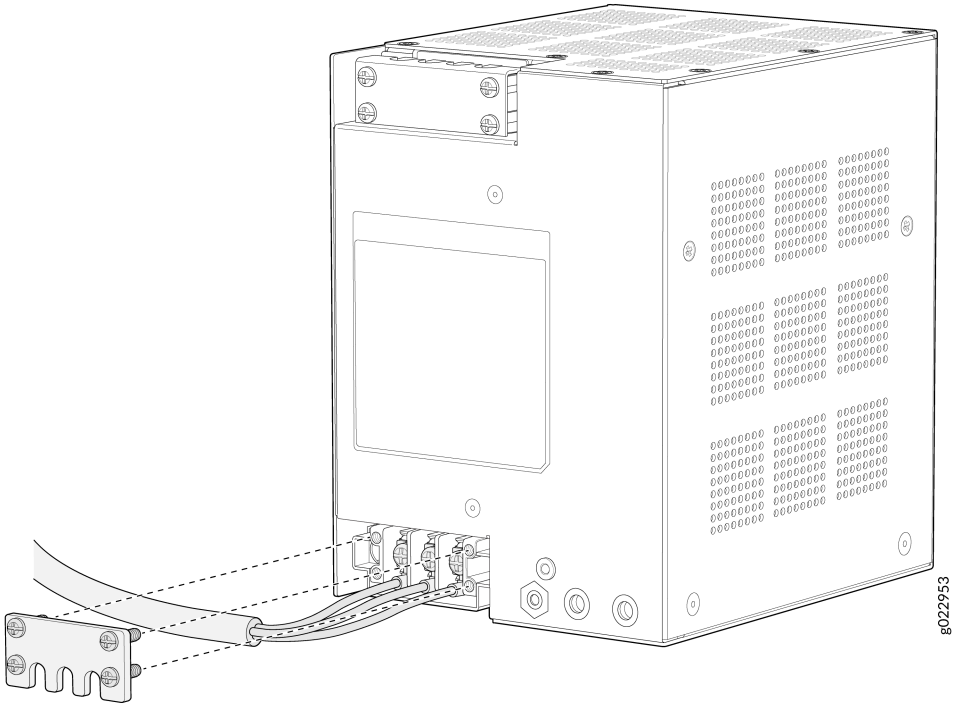

4. Remove or loosen the protective terminal cover of the PSU output power terminal. It is not required to remove the protective terminal cover; you can loosen the protective terminal cover until you can see the PSU output power terminals.

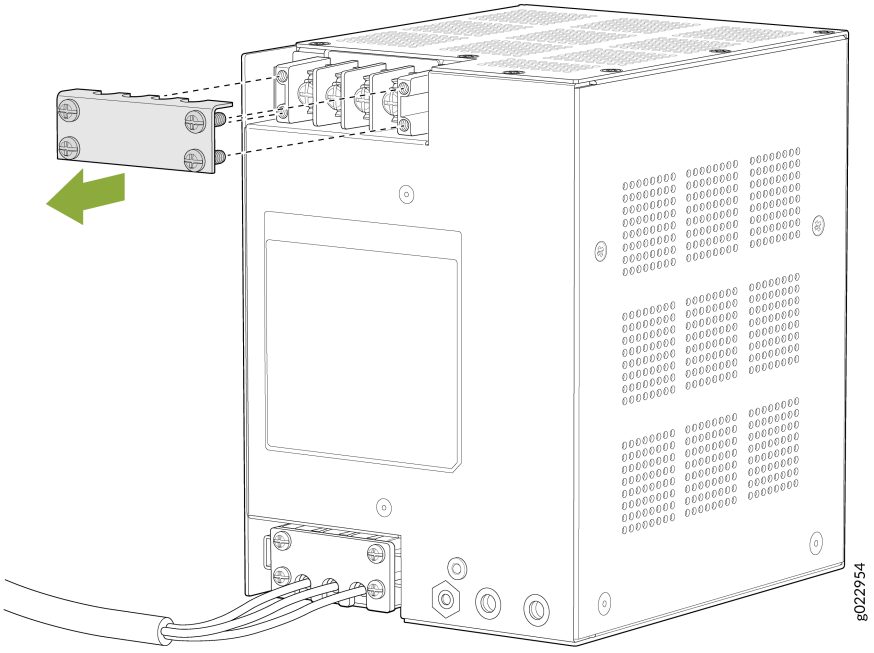

5. From the PSU output terminal, connect the PSU to the EX4100-H-12MP switch using the interconnecting wire. Secure the y-shaped connection points of the interconnecting wire onto the PSU output power terminal. If required, modify the strength of the physical connection by tightening or loosening the screws on the PSU output power terminal.

   NOTE: Use Phillips #2 screwdriver with torque 6 lb.in

   The PSU output terminal has two voltages - 54V and 12V. Connect the Y-shared connection points of the interconnecting wire in this manner (refer the image below):

   - **54v +**– Connect the y-shaped connection point of the red interconnecting wire.
   - **54v -**– Connect the y-shaped connection point of the black interconnecting wire.
   - **12v+**– Connect the y-shaped connection point of the brown interconnecting wire.
   - **12v-**– Connect the y-shaped connection point of the gray interconnecting wire.

6. Connect the other end of the interconnecting wire to the PSU connector on the switch. Assuming you are using only one PSU, connect the other end of the interconnecting wire to the connector for PSU 0 or to the connector for PSU 1, but not to both. A PSU connector is used for connecting only one PSU to the switch.Two PSU connectors are used for connecting two PSUs to the switch. Note

that you can connect up to two PSUs to the switch - two AC PSUs, two DC PSUs, one AC PSU and one DC PSU, only one AC PSU, or only one DC PSU.

7. Connect the other ends of the interconnecting wire to the PSU connector by initially partially loosening the screws on the sides of the PSU connector using slotted/flat head 2.5mm screwdriver with torque 1.77 lb.in. Then insert the other ends of the interconnecting wire into the PSU connector slots before fastening the screws on the sides of the PSU connector to secure the interconnecting wire to the PSU connector and complete the PSU to switch connection.

   NOTE: To remove or install the PSU connector you use slotted/flat head 3.5mm screwdriver with torque 2.65 lb.in.

   The other ends of the interconnecting wire to the PSU connector has to be connected in this manner assuming you are using only one PSU:

   - Connect the interconnecting wire connected to the 54v+ PSU output terminal to the 54v+ PSU connector input of PSU 0 or PSU 1.
   - Connect the interconnecting wire connected to the 54v- PSU output terminal to the 54v- PSU connector input of PSU 0 or PSU 1.
   - Connect the interconnecting wire connected to the 12v+ PSU output terminal to the 12v+ PSU connector input of PSU 0 or PSU 1.
   - Connect the interconnecting wire connected to the 12v- PSU output terminal to the 12v- PSU connector input of PSU 0 or PSU 1.

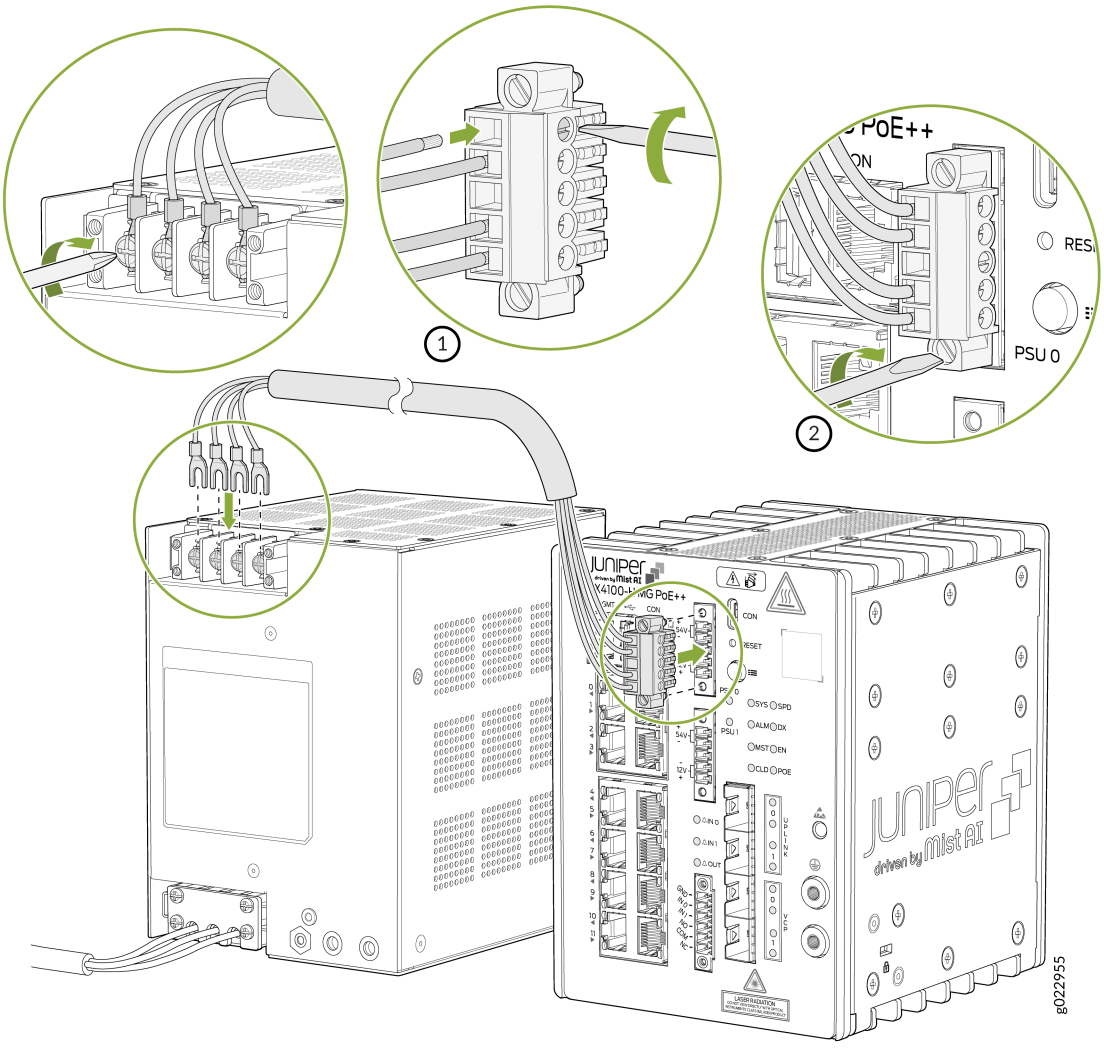

8. Secure the protective terminal cover with the screws over the PSU output power terminal.

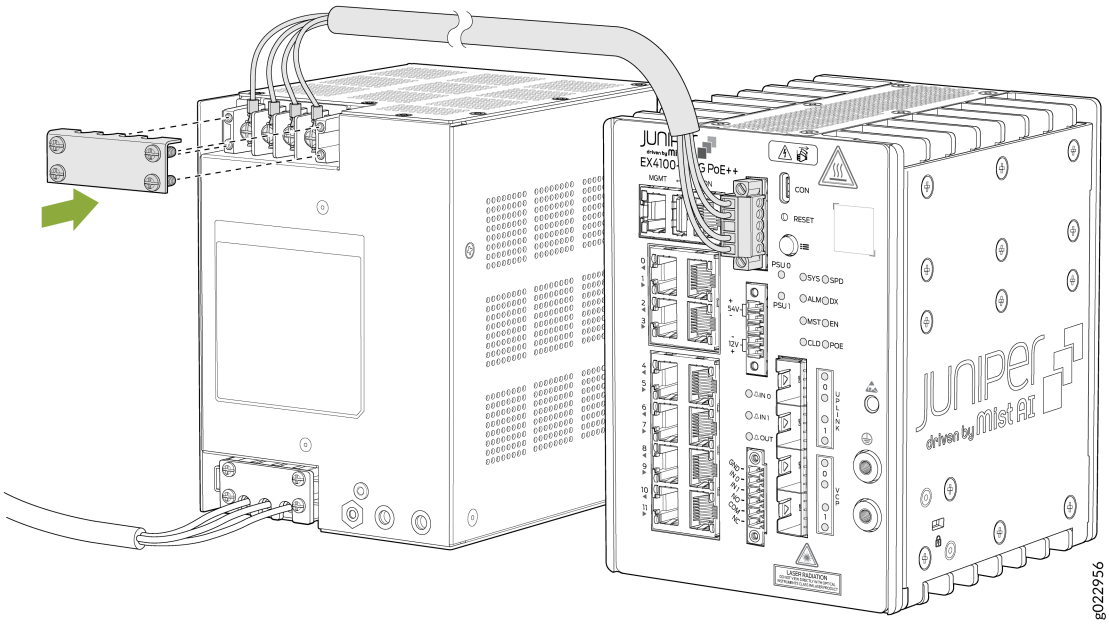

Claim, Onboard, and Configure EX4100-H

SUMMARY

This topic provides you the pointers to onboard and configure EX4100-H switches using Mist, or configure EX4100-H switches using Junos CLI.

EX4100-H switch is a cloud-ready switch, and you can manage this switch using Mist AI cloud portal. If you have a Mist Wired Assurance license, you can follow a few simple steps to get an EX4100-H up and running in the Juniper Mist AI cloud portal. See Table 1 on page 13 for more information.

Table 1: Onboard and Configure EX4100-H Using Mist

If you want to	Then
Claim and Onboard to Mist	See Cloud-Ready EX and QFX Switches with Mist

Table 1: Onboard and Configure EX4100-H Using Mist *(Continued)*

If you want to	Then
Configure Wired Assurance	See Juniper Mist Wired Configuration Guide
See all documentation available for Wired Assurance	Visit Wired Assurance Documentation

If you do not have a Mist Wired Assurance license, you can configure EX4100-H using Junos CLI. See Table 2 on page 14 for more information.

Table 2: Configure EX4100-H Using Junos CLI

If you want to	Then
Customize basic configuration	See "Configure Junos OS on an EX4100-H Switch" on page 139
Explore the software features supported on EX4100-H	See Feature Explorer
Configure Junos features on EX4100-H	See User Guides

2

CHAPTER

System Overview and Specifications

IN THIS CHAPTER

- EX4100-H System Overview | **16**
- EX4100-H Models and Specifications | **23**
- EX4100-H Chassis | **27**
- EX4100-H Power System | **42**

EX4100-H System Overview

SUMMARY

Learn about the key features and benefits, models, and specifications of EX4100-H switches.

IN THIS SECTION

- EX4100-H Ethernet Switch | **16**
- Mounting Options for EX4100-H Switches | **21**

EX4100-H Ethernet Switch

IN THIS SECTION

- EX4100-H Switch Models | **18**
- Virtual Chassis | **18**
- Dry Contact Alarm | **18**
- Power over Ethernet Ports | **21**
- EX4100-H Power System | **21**

EX4100-H-12MP switches are ruggedized industrial Ethernet switches. These switches are temperature-hardened and are deployed inside indoor or outdoor enclosures with proper air flow - refer Table 28 on page 60. These switches are expected to operate reliably under extended temperature ranges. The following are common deployment use cases of the EX4100-H switches:

- Smart cities and safe cities
- Transportation (outdoor/traffic signals)
- Factory floors
- Surveillance
- Railway networks
- Defense networks (outdoors with extended temperature ranges)

- Gaming casinos (inside enclosures)
- Airport terminals

For installations outdoors and in sectors such as defense, transportation, and traffic, you use a sealed cabinet for the switches. You can manage the switches from the cloud and on premises. These switches can be used for simple, efficient, and scalable network management using cloud-based hosted management applications, on-premise management tools, and APIs.

EX4100-H switches offer a strong hardware foundation with best-in-class security in combination with the simplicity of the cloud and the power of Mist AI. You can use Juniper Mist Wired Assurance to onboard, configure, and manage the EX4100-H from the cloud with minimal effort. You can also manage these switches by using the CLI or J-Web.

EX4100-H switches support Layer 2 (L2) and Layer 3 (L3) technologies. You can deploy these switches on the core, distribution, or access layers, providing a multisite network overlay.

The key benefits of EX4100-H switches are as follows:

- *Compact solution*—The EX4100-H switches are modular systems and are ideal for use inside enclosures with proper airflow. These switches are fanless and come with convection cooling. These are deployed indoors or outdoors and operate reliably under extended temperature ranges. These switches provide carrier-class reliability of modular systems with the economics and flexibility of stackable platforms.
- *Virtual chassis*—EX4100-H switches support Virtual Chassis technology. You can interconnect up to 10 switches to form a Virtual Chassis. You can interconnect EX4100-H switches with EX4100 and/or EX4100-F switches in a Virtual Chassis configuration.
- *High availability*—EX4100-H switches provide high availability through redundant power supplies, graceful Routing Engine switchover (GRES), and non-stop bridging and routing when you deploy the switches in a Virtual Chassis configuration.
- *Mist cloud managed*—EX4100-H switches are built to be cloud native. You can manage activities and features such as onboarding, fast boot-up, streaming telemetry, and fast changes (JET) from the Mist cloud. Even though the EX4100-H switches are built specifically for management in the Mist cloud, you can manage them on premises if you prefer.
- *EVPN VXLAN*—EX4100-H switches can act as L2 and L3 VXLAN gateways to support a mix of legacy endpoints and newer devices. In combination with VXLAN, EVPN provides the capability to connect a multi-site enterprise customer network in an open and standards-based manner.
- *Multigigabit*—Newer wave 2 and 802.11ax access points can use higher interface speeds on network switches to support higher scale and bandwidth for users and applications.

EX4100-H Switch Models

The following table provides a summary of the EX4100-H switch models. Click on each link in the table to find more information about the model.

Table 3: EX4100-H Switch Models

Multigigabit models
"EX4100-H-12MP" on page 23

Virtual Chassis

There are two ways to form a Virtual Chassis on EX4100-H switches - HiGig mode and HiGig over Ethernet (HGoE) mode. Refer Understanding HiGig and HGoE Modes in a Virtual Chassis.

HGoE mode is the default Virtual Chassis mode for all EX4100-H switches. To form a Virtual Chassis between EX4100-H and EX4100 or EX4100-H and EX4100-F switches, the Virtual Chassis mode needs to be HiGig on EX4100-H or HGoE on EX4100 and/or EX4100-F. In HiGig mode, you can operate the interconnected switches as a single device and use all the VCPs as VCPs or use all of them as network ports. You cannot mix multiple types of ports within a single, logical device. But in HGoE mode, mixed mode is supported - some ports can be VCPs and some ports can be network ports.

On EX4100-H switches, a Virtual Chassis is supported only on VCPs and uplink ports and not on access ports.

NOTE: On EX4100-H-12MP switches, the two 10G SFP+ dedicated VCPs on PIC 1 support both modes - HiGig and HGoE (but one at a time). Whereas, the two 10G SFP+ uplink ports on PIC 2 support only HGoE mode.

NOTE: When the Virtual Chassis is in HiGig mode, uplink ports will not function.

For more information about Virtual Chassis, see Understanding EX Series Virtual Chassis.

Dry Contact Alarm

The EX4100-H has a dry contact connector on the front panel for dry contact alarms support. The alarm input contact ports can be used to generate LED alarms on the switch and the alarm output contact ports can be used to connect to external devices.

Table 4: Components of the Dry Contact Alarm

LEDs	Alarm Input Ports	Alarm Relay Ports
• **IN0**—LED for IN0 alarm input • **IN1** – LED for IN1 alarm input • **OUT** – LED for alarm relay ports (NO, COM, NC)	• GND – Grounding port to connect grounding wire • IN0 – Alarm input • IN1 – Alarm input	• NO - Normally open alarm relay port • COM - Common alarm relay port • NC - Normally closed alarm relay port

Alarm input ports

Alarm input ports are dry contact input ports connecting to security sensors such as door and window monitors. When the alarm input ports receive a signal, the alarm input is sensed and reported to the management software to take further action. If the alarm input signal exceeds the threshold value, the LEDs for the alarm inputs (IN0 and IN1) glow to indicate an alarm condition. There are two input alarm ports (0 and 1). You can configure these ports to operate and trigger an alarm condition. Remember to mandatorily connect a wire to the GND port when configuring an input alarm port or ports.

⚠ **CAUTION**: The alarm input signal threshold is 5 V.

Alarm relay ports

The relay on the switch has three alarm relay ports: NO, COM, and NC. The alarm relay ports provide dry contacts to connect to external equipment, such as an audible or visual alarm that switches on or off, for example, a bell or a light. You can configure the alarm relay ports to trigger or activate based on an alarm condition in an input alarm port or a chassis alarm. An alarm condition is indicated by the LED (OUT). The alarm relay ports operate on the principles of a relay.

- *NO (normally open alarm relay port)*: No electric voltage under normal conditions. Under abnormal conditions, this port will have electric voltage; the COM will attach to it forming a circuit.
- *COM (common alarm relay port)*: Attached to the NC port under normal conditions. Under abnormal conditions, this port attaches to the NO port.
- *NC (normally closed alarm relay port)*: Electric voltage present under normal conditions. Under abnormal conditions, this port will not have electric voltage because the COM port will detach from it.

Configuring chassis alarm relays

The following is an example configuration of chassis relay alarms involving a Virtual Chassis with two EX4100-H switches.

```
{master: 1}
user@host
set chassis fpc 0 relay input port 0 trigger red
set chassis fpc 0 relay input port 1 trigger yellow
set chassis fpc 1 relay input port 0 trigger red
set chassis fpc 1 relay output port 0 input-relay 0
```

- In line 1, on FPC 0 of the Virtual Chassis, IN0 is set to trigger a major alarm (red) if an input signal that exceeds the threshold is detected.
- In line 2, on FPC 0 of the Virtual Chassis, IN1 is set to trigger a minor alarm (yellow) if an input signal that exceeds the threshold is detected.
- In line 3, on FPC 1 of the Virtual Chassis, IN0 is set to trigger a major alarm (red) if an input signal that exceeds the threshold is detected.
- In line 4, on FPC 1 of the Virtual Chassis, if a major alarm is triggered by the alarm input port (IN0) of FPC1, then trigger the first alarm relay port (NO).

After setting this configuration, assume you have connected the NO alarm relay port to a buzzer. When an alarm is triggered, the buzzer produces a sound. The OUT LED indicates this alarm in a continuously glowing red pattern. This is one of the use cases of a dry contact alarm. Another use case is when the IN1 LED of FPC 0 senses an alarm signal. Because the IN1 LED of FPC 0 is set to trigger a minor alarm, this alarm condition is indicated by the IN1 LED in the continuously glowing red pattern. You can issue `show chassis alarms` to view this alarm on the CLI.



NOTE:

- You can set the alarm relay to detect alarm conditions under normally open or normally closed configurations – but not both.
- You cannot start using the alarm inputs and alarm relay outputs without initial configuration. Issue the `show chassis craft-interface` command to view the statuses of alarm inputs and alarm relay outputs. If not configured, configure the alarm inputs and alarm relay outputs – see relay
- Issue `show chassis alarms` to view all alarms including any alarms generated by the alarm inputs and/or alarm relay outputs.

- Use `show chassis` in edit mode to check the configured dry contact alarms.
- When configurations are applied for dry contact alarm ports, it takes around 10 to 15 seconds for dry contact alarm LEDs to change their states. Refer "Dry Contact Alarm LEDs" on page 40.

Power over Ethernet Ports

EX4100-H switches are available with Power over Ethernet Plus (PoE+/PoE++) capability. These switch models provide perpetual and fast PoE functionality. PoE, PoE+, and PoE++ ports provide electrical power to devices. such as IP phones, wireless access points, and security cameras, through network cables. Because the network cables provide electrical current, you do not need separate power cords for these devices.

1. The EX4100-H-12MP switch models support PoE++ (90 W) capability by default.

For more information about PoE support on EX Series switches, see Understanding PoE on EX Series Switches.

NOTE: IEEE 802.3bt class 4 powered devices require category 5 or higher Ethernet cables.

EX4100-H Power System

The EX4100-H switches support a mix of AC and DC PSUs. The following are the EX4100-H switch models with their compatible power systems:

- EX4100-H-12MP switches use the external 340 W AC and/or 340 W DC PSU.

Mounting Options for EX4100-H Switches

The following table summarizes the mounting options for EX4100-H switch models.

Table 5: EX4100-H Mounting Options

Mounting Kit (SKU no)	Provided or orderable	Usage	Supported Models
EX4100-H-12-DRK	Orderable	DIN rail mounting	EX4100-H-12MP
EX4100-H-12-MMK **NOTE**: EX4100-H-MMK is not recommended to use near power substation utilities and near railway tracks.	Orderable	Magnet mount for EX4100-H-12MP	EX4100-H-12MP
EX4100-H-12-RMK	Orderable	2-post rack mount for EX4100-H-12MP	EX4100-H-12MP
EX4100-H-12-WMK	Orderable	Wall mount for EX4100-H-12MP	EX4100-H-12MP
EX4100-H-12-RM-DRK	Orderable	2-post rack mount with DIN rail for EX4100-H-12MP	EX4100-H-12MP
JNP-GL-2H6-M5-RA	Orderable	Panduit LCD6-14AF-L right-angled or equivalent 6 AWG grounding lug and M5 stainless steel screws	EX4100-H-12MP

EX4100-H Models and Specifications

SUMMARY

This topic provides details of the EX4100-H models and their specifications, information on number of ports and PoE support, throughput, and components in the shipment for each model.

IN THIS SECTION

- EX4100-H-12MP | 23

Let's take a look at the different EX4100-H models and their specifications.

Table 6: EX4100-H Switch Models

Multigigabit PoE++ models
EX4100-H-12MP

EX4100-H-12MP

Components on the Front Panel of EX4100-H-12MP Switch

Figure 1 on page 24 shows the components on the front panel of an EX4100-H-12MP switch.

Figure 2 on page 25 shows the LEDs on the front panel of an EX4100-H-12MP switch.

Figure 1: Components on the Front Panel of an EX4100-H-12MP Switch

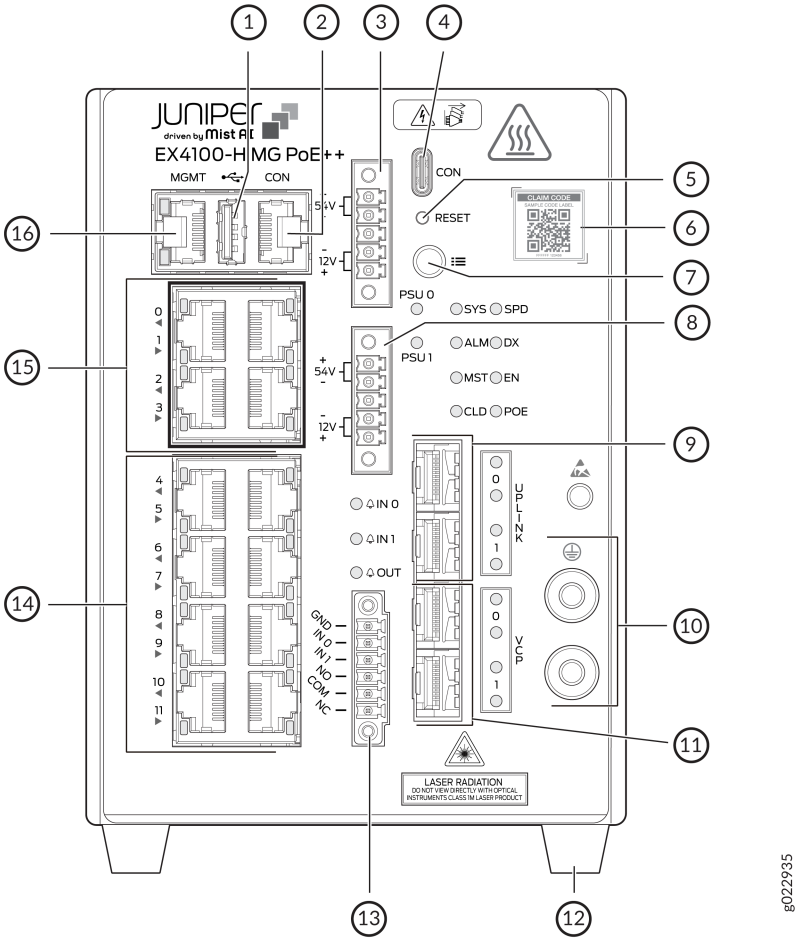

1. USB 2.0 Type-A host port
2. RJ-45 RS232 console port
3. PSU 0 input
4. USB Type-C console port
5. Reset button
6. Claim code label
7. Mode button
8. PSU 1 input
9. Two 1/10 Gbps SFP/SFP+ MACsec-enabled uplink ports

10. Protective ground terminal
11. Two 1/10 Gbps SFP/SFP+ Virtual Chassis ports (VCPs)
12. Footpad
13. Dry contact alarm ports
14. Eight 10M/100M/1 Gbps RJ-45 PoE++ ethernet ports
15. Four 100M/1/2.5 Gbps RJ-45 PoE++ ethernet ports
16. RJ-45 management port

Figure 2: Components on the Front Panel of an EX4100-H-12MP Switch (LEDs)

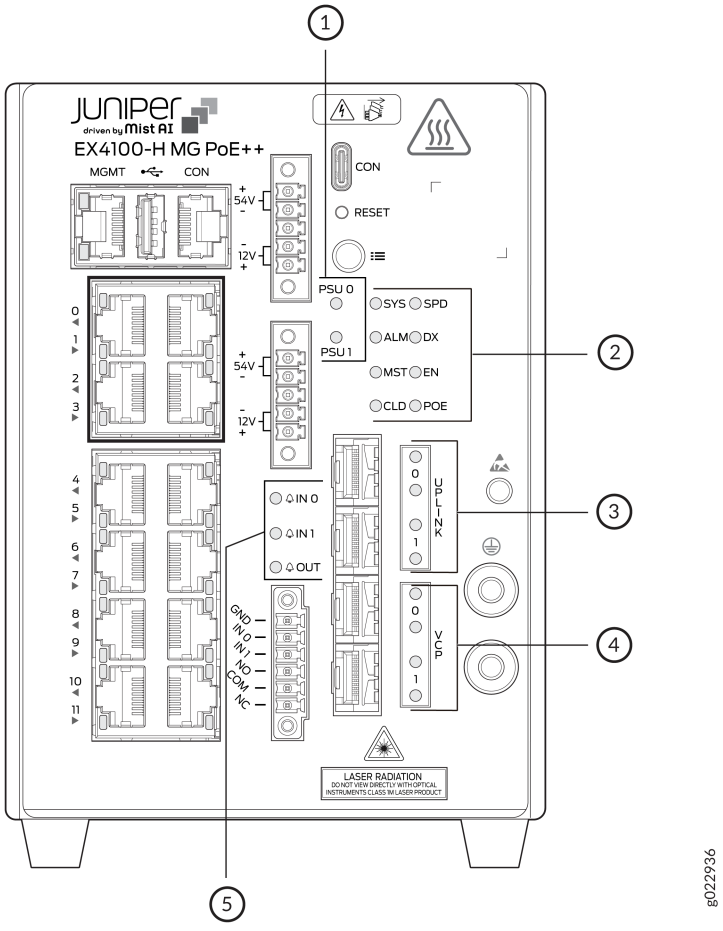

1. PSU 0 input and PSU 1 input LEDs

2. Port mode and chassis status LEDs
    - Chassis status LEDs (labeled **SYS**, **ALM**, **MST**, and **CLD**)
    - Port mode LEDs (labeled **SPD**, **DX**, **EN**, and **PoE**)
3. LEDs on the 10 Gbps SFP+ MACsec-enabled uplink ports
4. LEDs on the 10 Gbps SFP+ VCPs
5. LEDs of the Dry Contact Alarm

Table 7: EX4100-H-12MP Switch Models, Shipped Components, and First Junos Release

Model	Fan Modules	Power Supply Unit	First Junos OS Release
EX4100-H-12MP	NA. Fanless model. Convection cooled.	340 W AC external power supply unit A 340 W DC external power supply unit	24.3R1

Table 8: EX4100-H-12MP Switches—Physical Specifications and Ports

Item	Description
Chassis dimensions	**Height** - 6 in. (15.24 cm)
	Depth - 5.3 in. (13.40 cm)
	Width - 4.4 in. (11.17 cm)
Weight	5.22 lb (2.37 kg)

Table 8: EX4100-H-12MP Switches—Physical Specifications and Ports *(Continued)*

Item	Description
Built-in ports	• Four 100M/1/2.5 Gbps RJ-45 PoE++ MACsec-enabled ethernet ports • Eight 10M/100M/1 Gbps RJ-45 PoE++ ethernet ports • Two 1/10 Gbps SFP/SFP+ MACsec-enabled uplink ports • Two 1/10 Gbps SFP/SFP+ VCPs
PoE ports	12 - PoE++ (90 W by default)

EX4100-H Chassis

IN THIS SECTION

- Chassis Physical Specifications for EX4100-H Switches | **28**
- Chassis Status LEDs on EX4100-H Switches | **31**
- LEDs on the Management Port on EX4100-H Switches | **33**
- PSU Status LEDs on the Switch Chassis | **35**
- LEDs on the RJ-45 Network Ports, Virtual Chassis Ports, and Uplink Ports on EX4100-H Switches | **36**
- Dry Contact Alarm LEDs | **40**

Chassis Physical Specifications for EX4100-H Switches

The EX4100-H switch chassis is a rigid sheet-metal structure that houses all components of the switch Table 9 on page 31 summarizes the physical specifications of the EX4100-H switch chassis.

Figure 3: Clearance Requirements for Thermal Performance (Airflow) and Hardware Maintenance for EX4100-H-12MP Switches

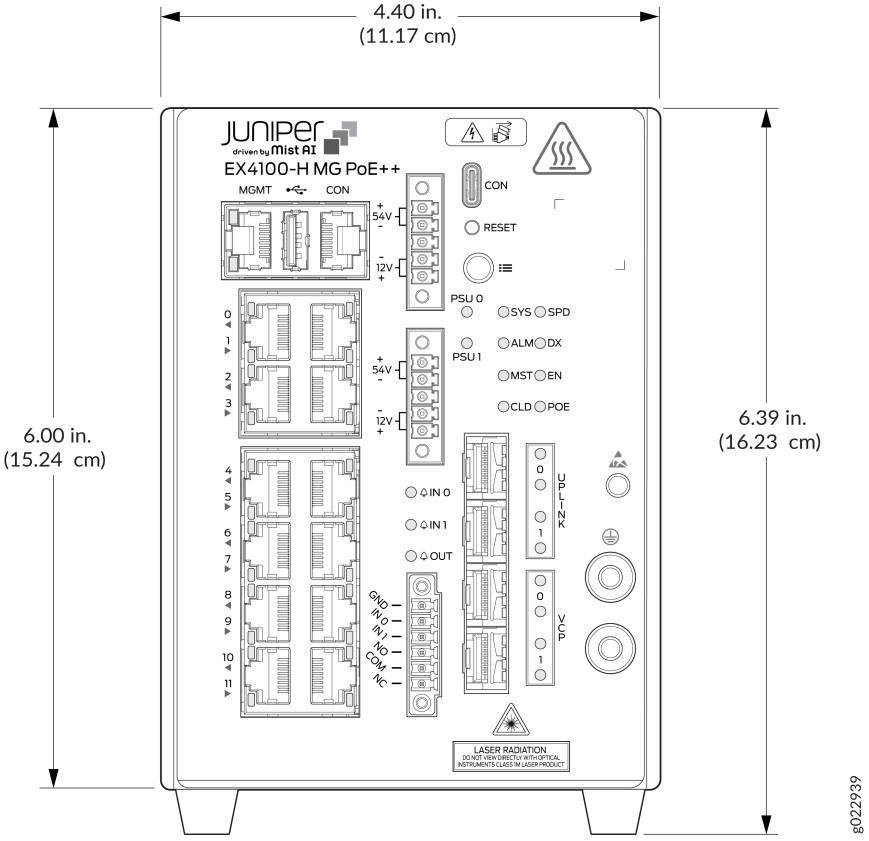

Note the following points when you start installing the switches:

- For the cooling system to function properly, ensure that the airflow around the chassis be unrestricted.
- If you are mounting the switch in a cabinet with other equipment, ensure that the exhaust from other equipment does not blow into the intake vents of the chassis. The temperature within the cabinet is always greater than room temperature outside the cabinet. Ensure the temperature inside the enclosure conforms to environmental specification. See Table 28 on page 60.

- Clearance requirements for thermal performance: Leave at least 2 in. space around the device except on the mounting side for proper airflow around the units and the fin surface.
- Clearance requirements for hardware maintenance: Leave at least 24 in. space around the device except on the mounting side for proper airflow around the units and the fin surface.

Figure 4: Clearance Requirements for Thermal Performance (Airflow) and Hardware Maintenance for the External 340 AC PSU Used for the EX4100-H-12MP Switch

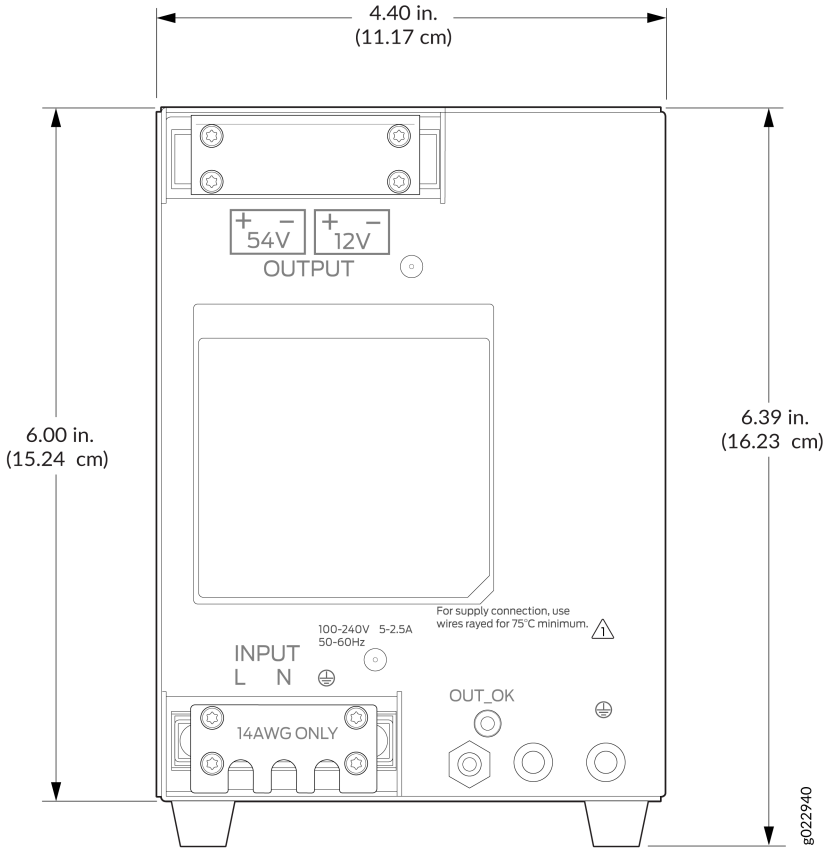

Figure 5: Clearance Requirements for Thermal Performance (Airflow) and Hardware Maintenance for the External 340 W DC PSU Used for the EX4100-H-12MP Switch

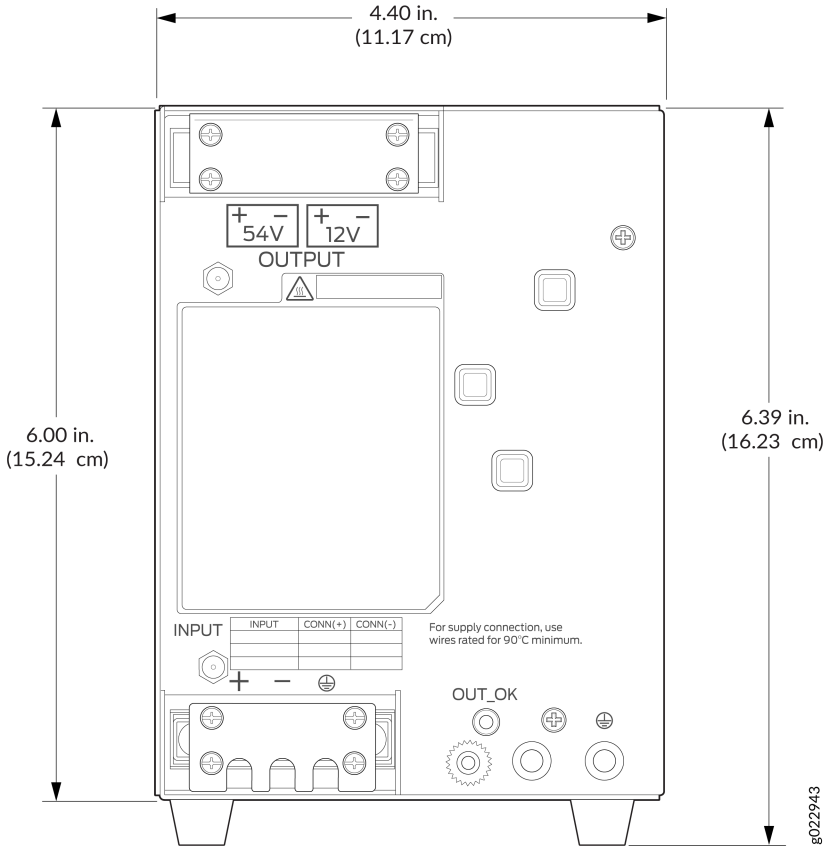

NOTE:

- If you are mounting the PSU in a cabinet, ensure the temperature inside the enclosure conforms to environmental specification. See Table 28 on page 60.
- Clearance requirements for thermal performance: Leave at least 2 in. space around the device except on the mounting side for proper airflow around the units and the fin surface.
- Clearance requirements for hardware maintenance: Leave at least 24 in. space around the device except on the mounting side for proper airflow around the units and the fin surface.

Table 9: Physical Specifications of the EX4100-H-12MP

Model	Chassis Height	Chassis Depth	Chassis Width
EX4100-H-12MP	6 in. (15.24 cm)	5.3 in. (13.40 cm)	4.4 in. (11.17 cm)

Table 10: Weight of the PSU

Switch Model	Power Supply Unit Weight	
	340 W external AC PSU	340 W external DC PSU
EX4100-H-12MP	4.52 lb (2.05 kg)	4.07 lb (1.85 kg)

Chassis Status LEDs on EX4100-H Switches

EX4100-H switches have four chassis status LEDs (labeled **SYS**, **ALM**, **MST**, and **CLD**) on the rightside of the front panel .

Figure 6: Chassis Status LEDs in EX4100-H-12MP Switches

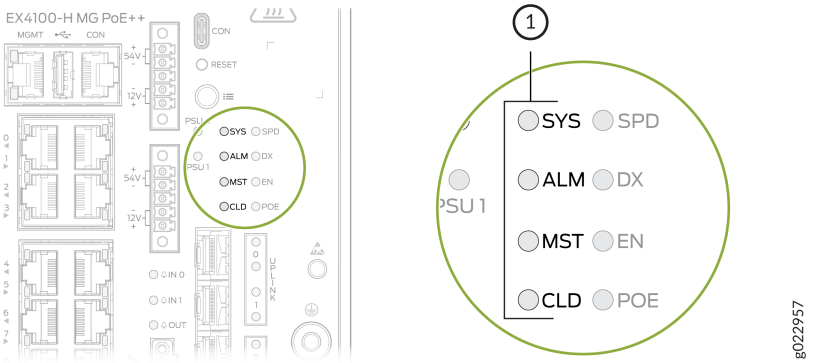

1– Chassis status LEDs

Table 11 on page 32 describes the chassis status LEDs labeled **SYS**, **ALM**, and **MST** on an EX4100-H switch. The table also describes the LED color patterns and their status descriptions. You can view the

colors of the LEDs remotely through the CLI by issuing the `show chassis led` operational mode command. Note that all LEDs can be lit simultaneously.

For information on the blink patterns of the CLD LED, which provide the cloud connection status of the switch, see Cloud Ready LED Blink Patterns, and to understand how the cloud connection works, see Cloud Connection Process.

Table 11: SYS, ALM, and MST Chassis Status LEDs on EX4100-H Switches

LED Label	Color	State and Description
SYS	Green	• On steadily—Junos OS is loaded on the switch. • Blinking—The switch is booting.
	Unlit	The switch is powered off or is halted.
ALM	Red	A major hardware fault, such as a temperature alarm or a power failure alarm, occurred, and the switch is halted. A major alarm indicates a critical error condition that requires immediate attention (see "Chassis Component Alarm Conditions on EX4100-H Switches" on page 168).
	Amber	A minor alarm, such as a software or a hardware error, occurred. Power off the switch and then power it back on. Monitor the switch to see whether it is working properly. A minor alarm indicates a non-critical condition that requires monitoring or maintenance. A minor alarm that is left unchecked might cause interruption in service or performance degradation.
	Unlit	No alarm is in effect, or the switch is halted.
MST	Green	In a standalone switch: • On steadily—The switch is functioning normally. • Off—The switch is powered off or is halted.

Table 11: SYS, ALM, and MST Chassis Status LEDs on EX4100-H Switches *(Continued)*

LED Label	Color	State and Description
		In a Virtual Chassis configuration: • On steadily—The switch is the primary one in the Virtual Chassis configuration. • Blinking—The switch is the backup one in the Virtual Chassis configuration. • Off—The switch is a linecard member in the Virtual Chassis configuration, or the switch is halted.

NOTE: When issuing `show system alarms`, only the ALM LED of the master switch in a Virtual Chassis system glows to display the alarm state. Backup switch and linecard ALM LEDs will be unlit. However, when issuing `show chassis alarms`, ALM LED glows on all of the individual member switches, displaying their individual alarm states.

NOTE: For Virtual Chassis deployments managed from the cloud, the CLD LED on individual Virtual Chassis members will reflect the state of the Master, except when a software download is in progress. When a software download is in progress, the CLD LED on a Virtual Chassis member will display the Junos OS upgrading LED pattern and color.

LEDs on the Management Port on EX4100-H Switches

The management port, labeled **MGMT**, on the front panel of EX4100-H switches has two LEDs that indicate the link activity and port status (see Figure 7 on page 34).

Figure 7: LEDs on the Management Port on EX4100-H-12MP Switches

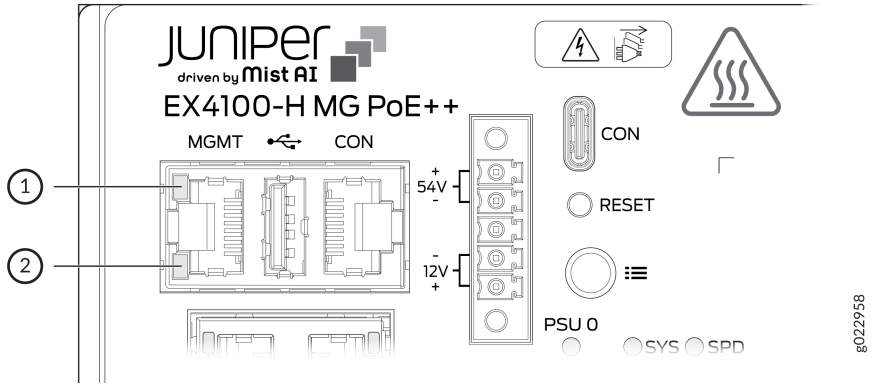

1– Link activity LED	2– Status LED

Table 12 on page 34 describes the LEDs on the management port.

Table 12: LEDs on the Management Port on EX4100-H Switches

LED	Color	State and Description
Link activity	Green	• On steadily—The port and the link are active, but there is no link activity. • Blinking—The port and the link are active, and there is link activity. • Off—The port is not active.
Status	Green	Indicates the speed: • On steadily—Link speed is 1000 Mbps. • On steadily—Link speed is 100 Mbps. • Off—Link speed is 10 Mbps.

PSU Status LEDs on the Switch Chassis

The PSU 0 and PSU 1 LEDs on the chassis display status of the external PSUs connected to the switch. See Figure 8 on page 35.

Figure 8: LEDs on the Chassis to Indicate PSU Connection Status

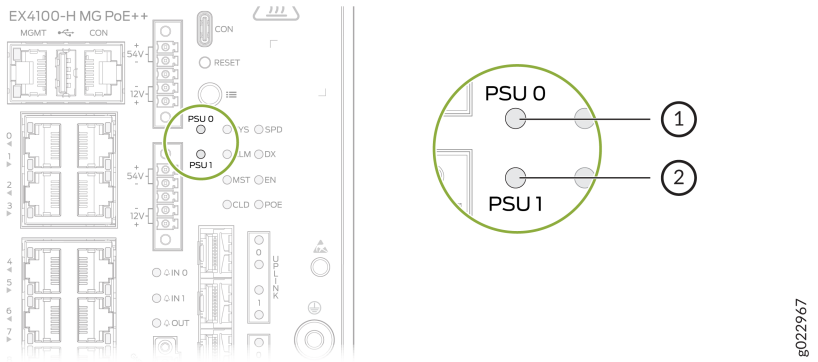

Table 13 on page 35 describes the colors and statuses of the LEDs.

Table 13: PSU Status LEDs

PSU LED Label	Color	State and Description
PSU 0 PSU 1	Green	54 V output OK or 12 V output OK. The external PSU is connected to the PSU connector (PSU 0 and/or PSU 1) on the switch.

Table 13: PSU Status LEDs *(Continued)*

PSU LED Label	Color	State and Description
	Off	Status can be one of the following • No input supply. • The PSU in standby mode. • The input cord unplugged or the input power lost, with a second PSU in parallel still with input power. • Power supply critical event causing a shutdown; OTP, OCP, UVP, OVP.

LEDs on the RJ-45 Network Ports, Virtual Chassis Ports, and Uplink Ports on EX4100-H Switches

IN THIS SECTION

- LEDs on the Network Ports | **36**

The LEDs on the RJ-45 network ports, SFP+ uplink ports, and SFP+ Virtual Chassis ports on EX4100-H switches show the link activity and port status.

LEDs on the Network Ports

The figures in this section show the LEDs on their respective ports:

- Figure 9 on page 37 shows the LEDs on the RJ-45 network ports on EX4100-H switches.
- Figure 10 on page 37 shows the LEDs on the SFP+ uplink ports.
- Figure 11 on page 38 shows the LEDs on the SFP+ Virtual Chassis ports.

- Table 14 on page 38 describes the link activity LED state and description on the RJ-45 ports, SFP+ uplink ports, and SFP+ Virtual Chassis Ports.

Figure 9: LEDs on the RJ-45 Network Ports on EX4100-H-12MP Switches

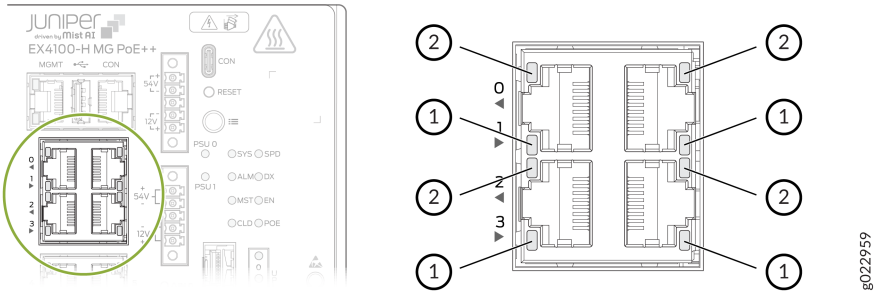

1– Link activity LED	2– Status LED

Figure 10: LEDs on the SFP+ uplink ports on EX4100-H-12MP Switches

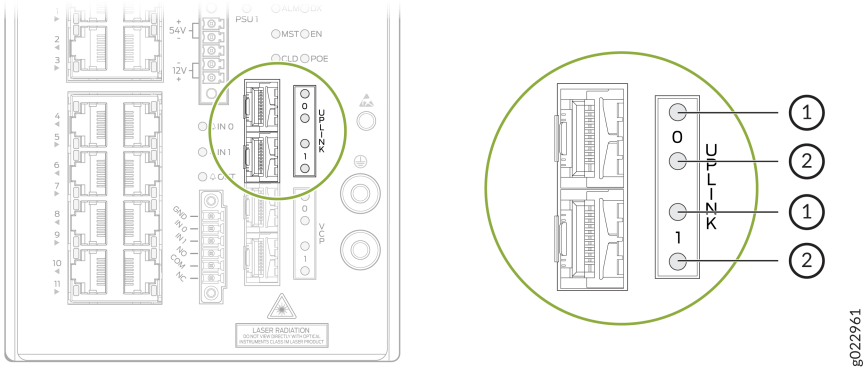

1– Link activity LED	2– Status LED

Figure 11: LEDs on the SFP+ Virtual Chassis Ports on EX4100-H Switches

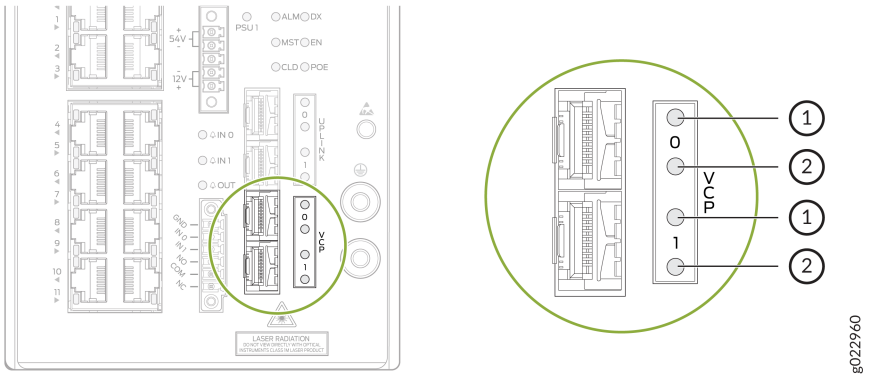

1– Link activity LED	2– Status LED

Table 14: Link Activity LED on the Network Ports, Uplink Ports, and VC Ports

LED Color	State and Description
Green	• On steadily—The port and the link are active, but there is no link activity. • Blinking—The port and the link are active, and there is link activity. • Off—The port is not active.

EX4100-H switches have network port mode LEDs (labeled **SPD**, **DX**, **EN**, and **POE**) on the right side of the front panel (see Figure 12 on page 39). These LEDs indicate the status of the network ports. Use the mode button on the right side of the front panel to toggle the status LEDs. You toggle the status LEDs to show the different port parameters for the network ports. The LED that is lit indicates the port parameter. Table 15 on page 39 describes the status LEDs.

NOTE: The LED labeled PoE is not available on switch models with network ports that do not provide PoE.

Figure 12: Port Mode LEDs on EX4100-H-12MP Switches

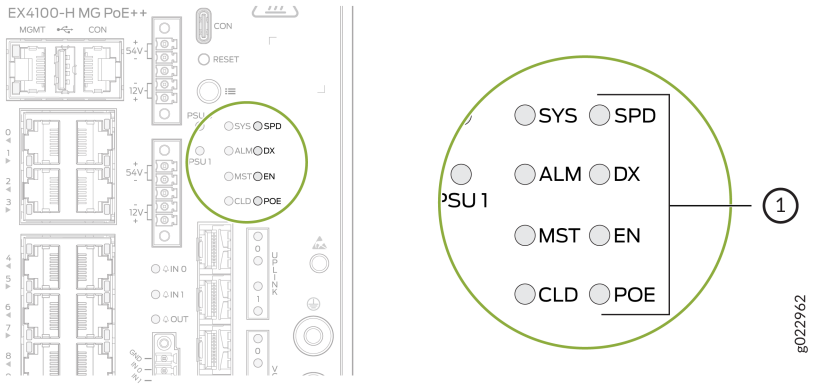

1– Port Mode LEDs

Table 15: Port Status of Network Ports Based on States of Port Mode LEDs

LED	Color	State and Description
SPD	Green	Indicates the speed. • On steadily—1000 Mbps • On steadily (for EX4100-H uplink and Virtual Chassis ports)—10 Gbps • Blinking—100 Mbps • Blinking; 1 blink per second (for EX4100-H uplink and Virtual Chassis ports)—1000 Mbps • Blinking; 3 blinks per second (for EX4100-H uplink and Virtual Chassis ports)—25 Gbps • Unlit—10 Mbps
DX	Green	Indicates the duplex mode. • On steadily—The port is set to full-duplex mode. • Unlit—The port is set to half-duplex mode.

Table 15: Port Status of Network Ports Based on States of Port Mode LEDs *(Continued)*

LED	Color	State and Description
EN	Green	Indicates the administrative status. • On steadily—The port is administratively enabled. • Unlit—The port is administratively disabled.
POE	Green	Indicates the PoE mode. • On steadily—PoE is enabled on the port, and a device is drawing power. • Blinking—PoE is enabled on the port, but none of the devices are drawing power from the port. • Unlit—PoE is not enabled on the port.

Dry Contact Alarm LEDs

The EX4100-H switch has three LEDs to indicate alarm conditions. Two LEDs are for input alarms (IN0 AND IN1) and one LED is for output alarm (OUT).

Figure 13: LEDs on the Dry Contact Alarm on a EX4100-H-12MP Switch

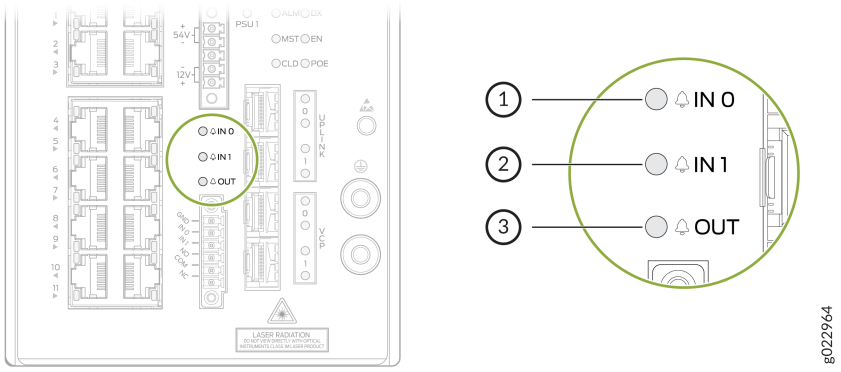

Table 16: OUT Dry Contact Alarm LED statuses

OUT	
Color	System Status
Off	Alarm OUT not configured, or the switch in off mode.
Green	Alarm OUT configured, no alarm detected, or an input alarm detected with severity NONE.
Red	Output port triggered or activated.

Table 17: IN0 and IN1 Dry Contact Alarm LED Statuses

IN0 and IN1	
Color	System Status
Off	Alarm IN0 or IN1 not configured.
Green	Alarm IN0 or IN1 configured, no alarm detected.
Blinking red	Major alarm detected.
Red	Minor alarm detected.

EX4100-H Power System

IN THIS SECTION

- AC Power Supply Unit in EX4100-H Switches | 42
- DC PSU in EX4100-H Switches | 48
- Power Supply LEDs in EX4100-H Switches | 51

This topic details the power systems (PSUs) and their specifications for the EX4100-H switches.

AC Power Supply Unit in EX4100-H Switches

IN THIS SECTION

- Characteristics of the AC PSU | 43
- Specifications of the AC PSUs | 45
- PoE Budget Planning | 45
- Specifications of the Power Cord for AC PSUs for EX4100-H Switches | 46

The EX4100-H-12MP uses 340 W AC and 340 W DC external fanless power supply units (PSUs). You can connect up to two PSUs to the switch.

You can connect the EX4100-H-12MP switch to any one of the following:

- One external 340 W AC PSU
- One external 340 W DC PSU
- Two external 340 W AC PSUs
- Two external 340 W DC PSUs
- One external 340 W AC PSU and one external 340 W DC PSU

Characteristics of the AC PSU

The AC PSU for the EX4100-H-12MP switch is an external PSU.

Figure 14: 340 W AC PSU for EX4100-H-12MP

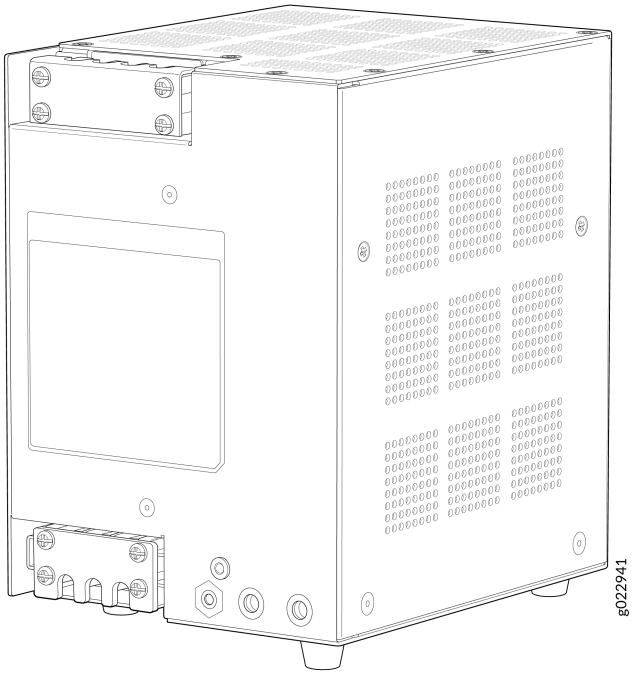

Figure 15: Components of the 340 W AC and DC PSU for EX4100-H-12MP

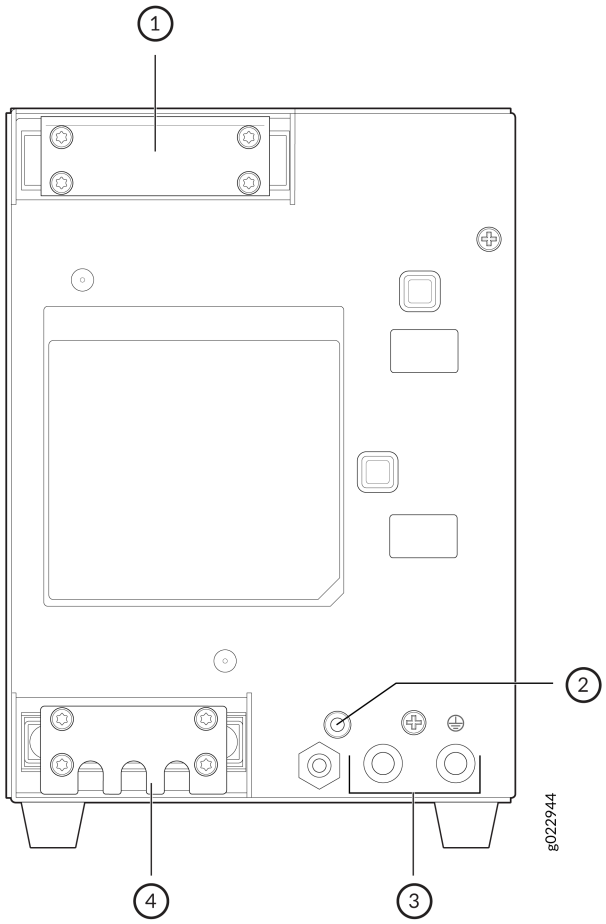

1– PSU power output terminal	3– PSU grounding points
2– PSU LED	4– PSU power input terminal

Table 18 on page 44 lists details of the 340 W AC external PSUs used in EX4100-H-12MP switches. Refer Figure 18 on page 51 for the external PSU LED colors and statuses.

Table 18: Details of the External 340 W AC PSU in EX4100-H Switches

Details		340 W AC PSU
Model number		• JPSU-H-340W-E-AC
AC appliance inlet	Number	1

Table 18: Details of the External 340 W AC PSU in EX4100-H Switches *(Continued)*

Details		340 W AC PSU
NOTE: Each AC appliance inlet requires a dedicated AC power source.	Type	Terminal block
Power supply status LED (OUT_OK)		One single bi-color LED (green and amber)

Specifications of the AC PSUs

- Table 19 on page 45 provides the PSU specifications of the 340 W AC PSUs.

Table 19: Specifications of the external 340 W AC PSUs

Item	Specification
Input voltage range and frequency	100-240 V, 50-60 HZ
Output power	340 W

PoE Budget Planning

Table 20 on page 45 shows the PoE budget planning details in EX4100-H-12MP switch models.

Table 20: PoE Budget Planning Details of EX4100-H-12MP Switch Models

Model	System Budget	PoE Budget	Total Budget	PSU
EX4100-H-12MP with one PSU	66 W	240 W	306 W	340 W
EX4100-H-12MP with two PSU	66 W	360 W	426 W	680 W

Specifications of the Power Cord for AC PSUs for EX4100-H Switches

A detachable AC power cord is supplied with the AC PSUs. The coupler is a custom lug-type. The plug end of the power cord fits into the power source outlet that is standard for your geographical location.

CAUTION: The AC power cord provided with each power supply is intended for use with that PSU only and not for any other use.

NOTE: The power cord of spare PSUs is separately orderable.

NOTE: In North America, AC power cords must not exceed 4.5 m (approximately 14.75 ft) in length, to comply with National Electrical Code (NEC) Sections 400-8 (NFPA 75, 5-2.2) and 210-52 and with Canadian Electrical Code (CEC) Section 4-010(3). The cords supplied with the switch are in compliance.

Table 21 on page 46 gives the AC power cord specifications for the countries and regions listed in the table.

Table 21: AC Power Cord Specifications

Country or Region	Electrical Specifications	Plug Standards	Juniper Model Number
Argentina	250 VAC, 10 A, 50 Hz	IRAM 2073	CBL-PWR-RGD-RNG-AR
Australia	250 VAC, 10 A, 50 Hz	AS/NZS 3112	CBL-PWR-RGD-RNG-AU
Brazil	250 VAC, 10 A, 50 Hz	NBR 14136 BR/3	CBL-PWR-RGD-RNG-BR
China	250 VAC, 10 A, 50 Hz	GB 2099/GB1002	CBL-PWR-RGD-RNG-CH
Europe (except Italy, Switzerland, and the United Kingdom)	250 VAC, 10 A, 50 Hz	CEE(7)VII	CBL-PWR-RGD-RNG-EU
India	250 VAC, 10 A, 50 Hz	IS1293	CBL-PWR-RGD-RNG-IN

Table 21: AC Power Cord Specifications *(Continued)*

Country or Region	Electrical Specifications	Plug Standards	Juniper Model Number
Israel	250 VAC, 10 A, 50 Hz	SI32 IL/3G	CBL-PWR-RGD-RNG-IL
Italy	250 VAC, 10 A, 50 Hz	CEI 23-50 I/3G	CBL-PWR-RGD-RNG-IT
Japan	125 VAC, 12 A, 50 Hz or 60 Hz	JIS C8303/CNS690	CBL-PWR-RGD-RNG-TW
Korea	250 VAC, 10 A, 50 Hz or 60 Hz	KSC8305	CBL-PWR-RGD-RNG-KR
North America*	125 VAC, 13 A, 60 Hz	NEMA 5-15P	CBL-PWR-RGD-RNG-US
	125 VAC, 15 A, 60 Hz	NEMA 5-15P	CBL-PWR-RGD-RNG-US
South Africa	250 VAC, 10 A, 50 Hz	SAN 164/1 ZA/3	CBL-PWR-RGD-RNG-SA
Switzerland	250 VAC, 10 A, 50 Hz	SEV 1011- 12G	CBL-PWR-RGD-RNG-SZ
United Kingdom	250 VAC, 10 A, 50 Hz	BS1363A/SS145	CBL-PWR-RGD-RNG-UK
			CBL-PWR-RGD-DC
			CBL-PWR-RGD-SYS

Figure 16 on page 48 illustrates the plug on the power cord for some of the countries or regions listed in Table 21 on page 46.

Figure 16: AC Plug Types

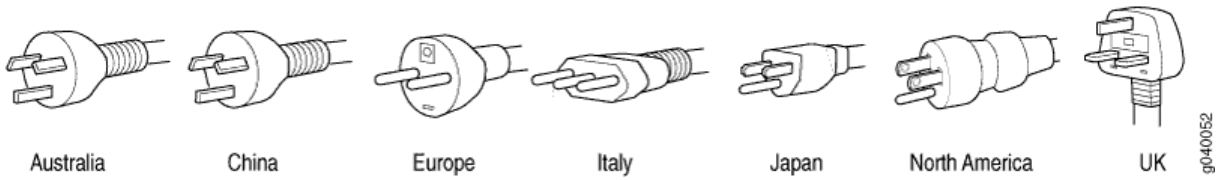

CAUTION: Do not use the AC power cord with any other product other than EX4100-H.

CAUTION: Power cords must not block access to switch components.

DC PSU in EX4100-H Switches

IN THIS SECTION

- Characteristics of a DC PSU | **48**
- Specifications of the DC PSUs Used in EX4100-H Switches | **49**
- Specifications of the Power Cord for DC PSUs for EX4100-H Switches | **50**

The EX4100-H-12MP switches can be powered by external 340 W DC PSUs.

Characteristics of a DC PSU

The DC PSUs for EX4100-H-12MP switches are available in the 340 W fanless model.

Figure 17: 340-W External DC Power Supply for EX4100-H-12MP

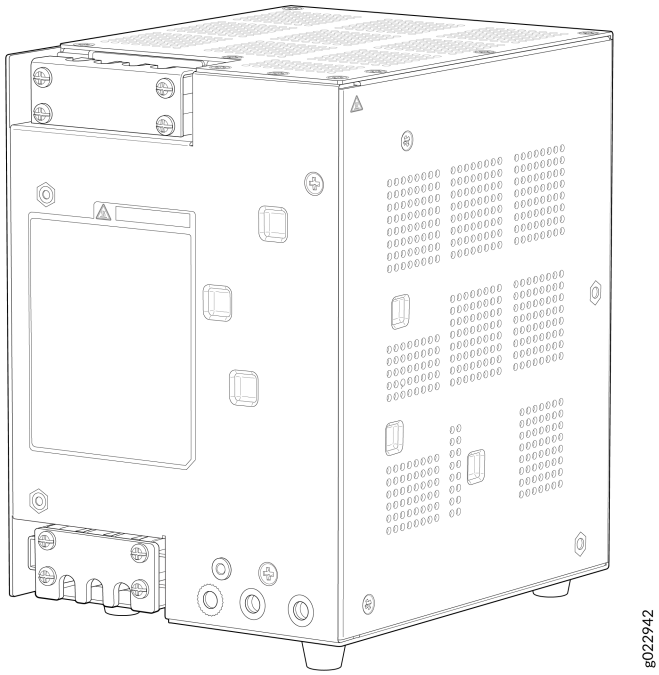

Table 22 on page 49 lists the details of the 340 W DC PSUs used in EX4100-H-12MP switches.

Table 22: Details of the External DC PSUs in EX4100-H Switches

Details		340 W DC PSU
Model number		• EX4100-H-12MP-DC-PSU
DC appliance inlet **NOTE**: Each DC appliance inlet requires a dedicated power source.	Number	1
	Type	DC input power connector
Power supply status LED (OUT_OK)		One single bi-color LED (green and amber)

Specifications of the DC PSUs Used in EX4100-H Switches

Table 23 on page 50 provides the power supply specifications of the DC power supplies.

Table 23: Specifications of the DC PSUs Used in EX4100-H Switches

Item	Specification	DC PSU
DC input voltage and range	Range at input of terminal block: 20.4 VDC to 72 VDC DC input voltage nominal: +24V/-48V/-60VDC	EX4100-H-12MP-DC-PSU (340 W external)

NOTE: The wire gauge measurement of the external 340 W DC PSU of the EX4100-H-12MP is 12 AWG with temperature rating of wire 90C or as per country code. *CBL-PWR-RGD-SYS* is the Juniper Model Number of the DC power cord that connects the external 340 W DC PSU to the switch.

Specifications of the Power Cord for DC PSUs for EX4100-H Switches

A detachable DC power cord is supplied with the DC PSUs.

The following two DC power cords are available for the external 340 W DC PSU of EX4100-H-12MP.

- *CBL-PWR-RGD-DC* - Juniper Model Number of the DC power cord that connects from the DC power source to the DC PSU
- *CBL-PWR-RGD-SYS* - Juniper Model Number of the DC power cord that connects the external 340 W DC PSU to the switch

CAUTION: Do not use the DC power cord with any other product other than EX4100-H.

CAUTION: Power cords must not block access to switch components.

NOTE: The wire gauge measurement of the external 340 W DC PSU of the EX4100-H-12MP is 12 AWG. *CBL-PWR-RGD-SYS* is the Juniper Model Number of the DC power cord that connects the external 340 W DC PSU to the switch.

Power Supply LEDs in EX4100-H Switches

The PSUs of the EX4100-H switches have one LED that indicates the state of the power supply (see Figure 18 on page 51).

Figure 18: The LED on the PSU of EX4100-H-12MP Switch

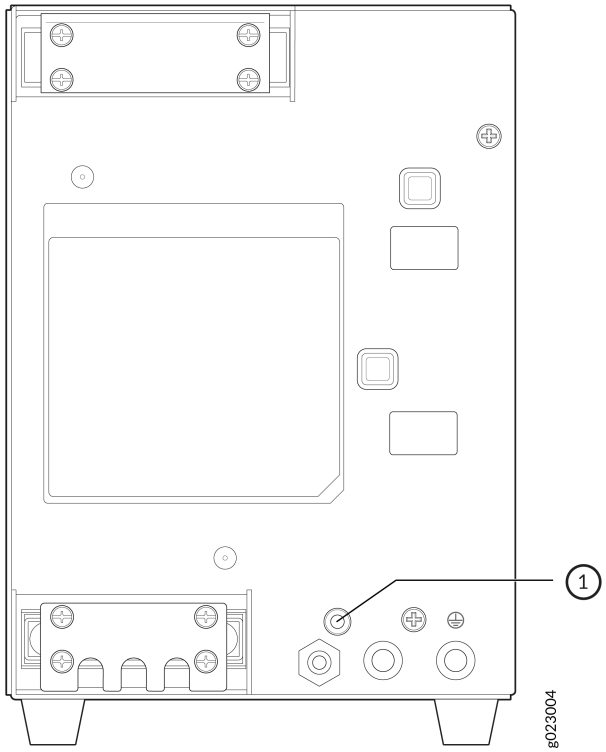

1– PSU LED	

Table 24 on page 52 describes the 340-W AC PSU external power supply LED.

Table 25 on page 52 describes the 340-W DC PSU external power supply LED.

Table 24: AC power supply LED on the 340-W external PSU of the EX4100-H-12MP

LED Label	LED State	Power Supply Condition
OUT_OK	Green	54V output OK or 12V output OK.
	Amber	Indicates a fault condition even though there is power supply. The following are the possible fault codes: • 54V OVP • 54V OTP • 54V OCP • 12V OVP • 12V OTP • 12V OCP • PRI OTP • AMB OTP • 54V UVP • 12V UVP • PFC OVP
	Off	No AC input

Table 25: DC power supply LED on the 340-W external PSU of the EX4100-H-12MP

LED Label	LED State	Power Supply Condition
OUT_OK	Green	12V output OK.

Table 25: DC power supply LED on the 340-W external PSU of the EX4100-H-12MP *(Continued)*

LED Label	LED State	Power Supply Condition
	Amber	Indicates a fault condition even though there is power supply. The following are the possible fault codes: • 12V OVP • 12V OTP • 12V OCP • PRI OTP • AMB OTP
	Blinking Amber	OTW, OCW, OVW
	Blinking Green	12V off, the PSU entering ISP mode
	Off	No input

3

CHAPTER

Site Planning and Preparation

IN THIS CHAPTER

- Site Preparation Checklist for EX4100-H Switches | **55**
- EX4100-H Site Guidelines and Requirements | **57**
- EX4100-H Network Cable and Transceiver Planning | **67**
- EX4100-H Management Cable Specifications and Pinouts | **75**

Site Preparation Checklist for EX4100-H Switches

The following checklist summarizes the tasks you need to perform when preparing a site for EX4100-H switch installation.

Table 26: Site Preparation Checklist

Item or Task	For More Information	Performed By	Date
Environment			
Verify that environmental factors such as temperature and humidity are within switch tolerances.	"Environmental Requirements and Specifications for EX4100-H Switches" on page 57		
Power			
Measure the distance between external power sources and the switch installation site.	"Clearance Requirements for Airflow and Hardware Maintenance for EX4100-H Switches" on page 64		
Locate sites to connect system grounding.			
Calculate the power consumption requirements.	• "AC Power Supply Unit in EX4100-H Switches" on page 42		
Hardware Configuration			
Choose the number and types of switches you want to install.	"EX4100-H System Overview" on page 16		
Cabinet			

Table 26: Site Preparation Checklist *(Continued)*

Item or Task	For More Information	Performed By	Date
Verify that the cabinet meets the minimum requirements for installing the switch.	• "Cabinet Requirements for EX4100-H Switches" on page 62		
Plan cabinet location, including required space clearances.			
Secure the cabinet to the floor and building structure.			
Cables			
Acquire cables and connectors: • Determine the number of cables needed based on your planned configuration. • Review the maximum distance allowed for each cable. Choose the length of the cable based on the distance between the hardware components being connected.			
Plan the cable routing and management.			
Wall			
Verify that the wall meets the minimum requirements for the installation of the switch.	"Mount an EX4100-H-12MP Switch on a Wall Within a Cabinet" on page 107		
Verify appropriate clearance exists in your selected location.	"Cabinet Requirements for EX4100-H Switches" on page 62.		

EX4100-H Site Guidelines and Requirements

IN THIS SECTION

- Environmental Requirements and Specifications for EX4100-H Switches | 57
- General Site Guidelines | 61
- Site Electrical Wiring Guidelines | 61
- Cabinet Requirements for EX4100-H Switches | 62
- Clearance Requirements for Airflow and Hardware Maintenance for EX4100-H Switches | 64

Environmental Requirements and Specifications for EX4100-H Switches

You must install the switch in a cabinet. You must house it in a dry, clean, well-ventilated, and temperature-controlled environment.

Follow these environmental guidelines:

- Ensure that the site is as dust-free as possible. Dust can clog air intake vents and filters, reducing the efficiency of the switch cooling system.
- Maintain ambient airflow for normal switch operation. If the airflow is blocked or restricted, or if the intake air is too warm, the switch might overheat. If the switch overheats, the switch temperature monitor may shut down the device to protect the hardware components.

The following are the required environmental conditions for normal switch operation of EX4100-H switches.

- Switch: All EX4100-H switch models
- Altitude: No performance degradation up to 15,000 feet (4572 meters)
- Relative humidity: Normal operation ensured in relative humidity range of 5% through 95%, noncondensing
- Seismic tolerance: Tested for Zone 4 earthquake safety.
- Temperature:

- Normal operation ensured in sealed enclosure in temperature range of -40 °F through 140 °F (-40 °C to 60 °C) , up to 15000 feet.
- Normal operation ensured in ventilated enclosure in temperature range of -40 °F through 158 °F (-40 °C to 70 °C) , up to 15000 feet.
- Normal operation ensured in blower equipped enclosure in temperature range of -40 °F through 167 °F (-40 °C to 75 °C) , up to 15000 feet.
- Non-operating storage temperature in shipping container: -40 °F through 185 °F (–40 °C through 85 °C).

Environment Specification for 10G Industrial Grade Optics

Table 27 on page 58 shows the environmental specification for 10G industrial grade optics.

Table 27: Environment Specification for 10G industrial grade optics

Optics Module	ZR		ER		LR		SR	Industrial Grade 10G base-T		Commercial Grade 10G Base-T	
Power	1.4W		1.2W		0.9W		0.65 W	2.3W		2.0W	
Warning/ Spec	85		85		85		85	85		60	
Alarm	88		90		90		90	90		90	
Altitude	High Altitude	Sea level	High Altitude	Sea level	High Altitude	Sea level	High Altitude	High Altitude	Sea Level	High Altitude	Sea Level
Ambient and Altitude	52C, 0LFM, 15000ft	55C, 0LFM	52C, 0LFM, 15000ft	55C, 0LFM	54C, 0LFM, 15000ft	57C, 0LFM	60, 0LFM, 15000ft	45C, 0LFM, 15000ft	48C, 0LFM	20C, 0LFM, 15000ft	23C, 0LFM

Table 27: Environment Specification for 10G industrial grade optics *(Continued)*

Optics Module	ZR		ER		LR		SR	Industrial Grade 10G base-T		Commercial Grade 10G Base-T	
	62C, 40LFM, 15000ft	65C, 40LFM	62C, 40LFM, 15000ft	65C, 40LFM	64C, 40LFM, 15000ft	67C, 40LFM	70, 40LFM, 15000ft	50C, 40LFM, 15000ft	53C, 40LFM	25C, 40LFM, 15000ft	28C, 40LFM
	67C, 200LFM, 15000ft	70C, 200LFM	67C, 200LFM, 15000ft	70C, 200LFM	69C, 200LFM, 15000ft	72C, 200LFM	75, 200LFM, 15000ft	65C, 200LFM, 15000ft	68C, 200LFM	35C, 200LFM, 15000ft	38C, 200LFM
	52C, Desktop, 15000ft	55C, Desktop	52C, Desktop, 15000ft	55C, Desktop	54C, Desktop, 15000ft	57C, Desktop	60C, DTP, 15000ft	45C, DTP, 15000ft	48C, Desktop	20C, DTP, 15000ft	23C, Desktop

NOTE: Install the EX4100-H switch only in restricted areas, such as dedicated equipment rooms and equipment closets. Install the switch in accordance with Articles of the National Electrical Code, ANSI/NFPA 70.

NOTE: EX4100-H-12MP switch must be installed in cabinet or enclosure whether the switch is installed outdoor or indoor.

Table 28: Environmental guidelines

Requirement	EX4100-H-12MP	EX4100-H-24MP	EX4100-H-24F
Operational temperature range upto 15000 feet altitude • Sealed cabinet (0 LFM): -40deg C to +60 deg C • Vented cabinet (40 LFM): -40 deg C to 70 deg C • Blower equipped cabinet (200LFM) : -40 deg C to +75 deg C	Supported	Supported	Supported
Storage temperature range - -40 deg C to +85 deg C Storage temperature range altitude upto 15000 feet	Supported	Supported	Supported
Altitude - upto 15000 feet without temperature derating.	Supported	Supported	Supported

NOTE:

- Protect system from moisture, salt fog, outdoor containments when deployed in vented cabinets in outdoor location and in non-office indoor environment locations.
- Corrosion: components such as RJ 45 connector, SFP Cage, EMI fingers, fasteners, chassis- should not corrode due to salt fog when system is in vented outdoor cabinet.

- When the switch installed in an enclosure or cabinet, the temperature within the enclosure is greater than room temperature outside the enclosure. Ensure temperature inside the enclosure conforms to device specification detailed in Table 28 on page 60.

General Site Guidelines

Efficient device operation requires proper site planning and maintenance. It also requires proper layout of the equipment, rack or cabinet, and wiring closet.

To plan and create an acceptable operating environment for your device and prevent environmentally caused equipment failures:

- Keep the area around the chassis free from dust and conductive material, such as metal flakes.
- Follow the prescribed airflow guidelines to ensure that the cooling system functions properly. Ensure that the exhaust from other equipment does not blow into the intake vents of the device.
- Follow the prescribed electrostatic discharge (ESD) prevention procedures to prevent damaging the equipment. Static discharge can cause components to fail completely or intermittently over time.
- Install the device in a secure area, so that only authorized personnel can access the device.

Site Electrical Wiring Guidelines

Table 29 on page 62 describes the factors you must consider while planning the electrical wiring at your site.



WARNING: You must provide a properly grounded and shielded environment and use electrical surge-suppression devices.

Avertissement Vous devez établir un environnement protégé et convenablement mis à la terre et utiliser des dispositifs de parasurtension.

Table 29: Site Electrical Wiring Guidelines

Site Wiring Factor	Guidelines
Signaling limitations	If your site experiences any of the following problems, consult experts in electrical surge suppression and shielding: • Radio frequency interference (RFI) because of improperly installed wires • Damage from lightning strikes occuring when wires exceed recommended distances or pass between buildings • Electromagnetic pulses (EMPs) caused by lightning damaging unshielded conductors and electronic devices
Radio frequency interference	To reduce or eliminate RFI from your site wiring, do the following: • Use a twisted-pair cable with a good distribution of grounding conductors. • To exceed the recommended distances, use a high-quality twisted-pair cable with one ground conductor for each data signal, when applicable.
Electromagnetic compatibility	If your site is susceptible to problems with electromagnetic compatibility (EMC), particularly from lightning or radio transmitters, seek expert advice. Strong sources of electromagnetic interference (EMI) can cause: • Destruction of the signal drivers and receivers in the device. • Electrical hazards as a result of power surges conducted over the lines into the equipment.

Cabinet Requirements for EX4100-H Switches

Cabinet requirements consist of:

- Cabinet size.
- Clearance requirements.
- Cabinet airflow requirements.

Table 30: Cabinet Requirements and Specifications

Cabinet Requirement	Guidelines
Cabinet size	• The minimum cabinet size is 14 in. (35.56 cm) deep. Large cabinets improve airflow and reduce chances of overheating.
Cabinet clearance	• The outer edges of the front mounting brackets extend the width of the chassis to 19 in. (48.2 cm).
Cabinet airflow requirements	When you mount the device in a cabinet, ensure that ventilation through the cabinet is sufficient to prevent overheating, as follows: • Ensure adequate cool air supply to dissipate the thermal output of the device or devices. • Ensure that the hot air exhaust of the chassis exits the cabinet without recirculating into the device. • Install the device in the cabinet in a way that maximizes the open space on the side of the chassis that has the hot air exhaust. • Route and secure all cables to minimize the blockage of airflow to and from the chassis. • Ensure that the spacing of rails and adjacent cabinets is such that proper clearance exists around the device and cabinet. • A cabinet larger than the minimum required provides better airflow and reduces the chance of overheating.

Clearance Requirements for Airflow and Hardware Maintenance for EX4100-H Switches

When planning the site for installing an EX4100-H switch, you must allow sufficient clearance around the installed switch.

See:

- Figure 19 on page 64 for clearance requirements for airflow and hardware maintenance for EX4100-H-12MP switches.
- Figure 20 on page 65 for clearance requirements for airflow and hardware maintenance for the external PSU of the EX4100-H-12MP switch.

Figure 19: Clearance Requirements for Thermal Performance (Airflow) and Hardware Maintenance for the EX4100-H-12MP Switch

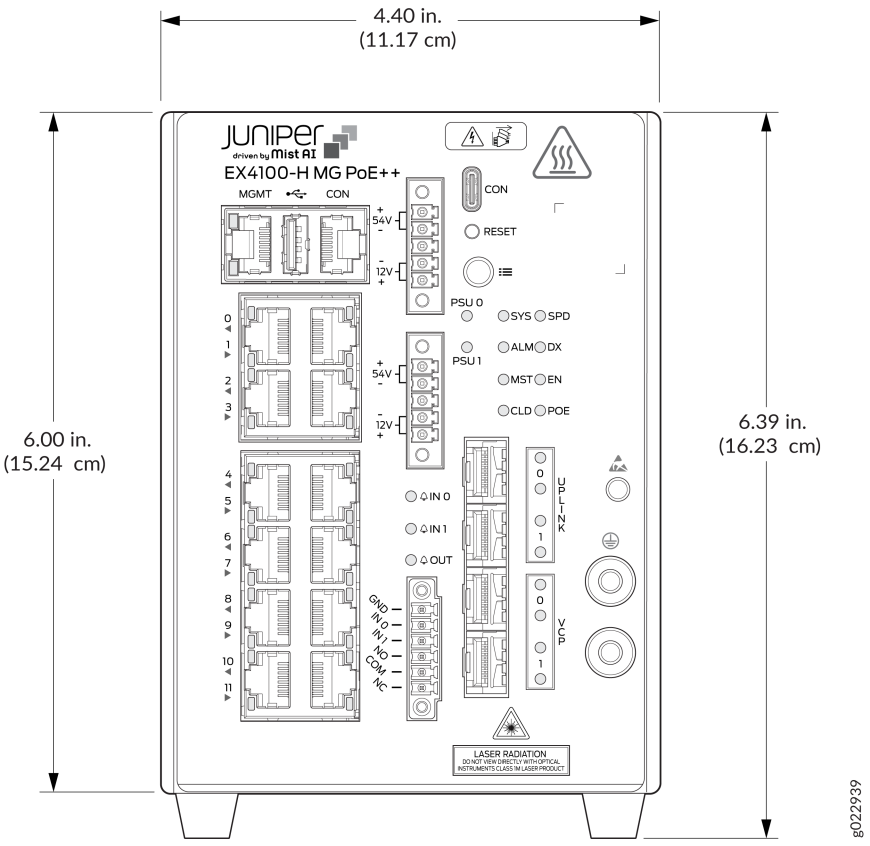

If you are mounting the switch in a cabinet with other equipment ensure that the exhaust from other equipment does not blow into the intake vents of the chassis. Ensure temperature inside the enclosure conform to environmental specification. See *Environment Guidelines* Table 28 on page 60.

- Clearance requirements for thermal performance
  - Leave at least 2 in around the device except mounting side for proper airflow around the units and the fin surface.
- Clearance requirements for hardware maintenance
  - Leave at least 24 in around the device except mounting side for proper airflow around the units and the fin surface.

Figure 20: Clearance Requirements for Thermal Performance (Airflow) and Hardware Maintenance for the External AC PSU of the EX4100-H-12MP Switch

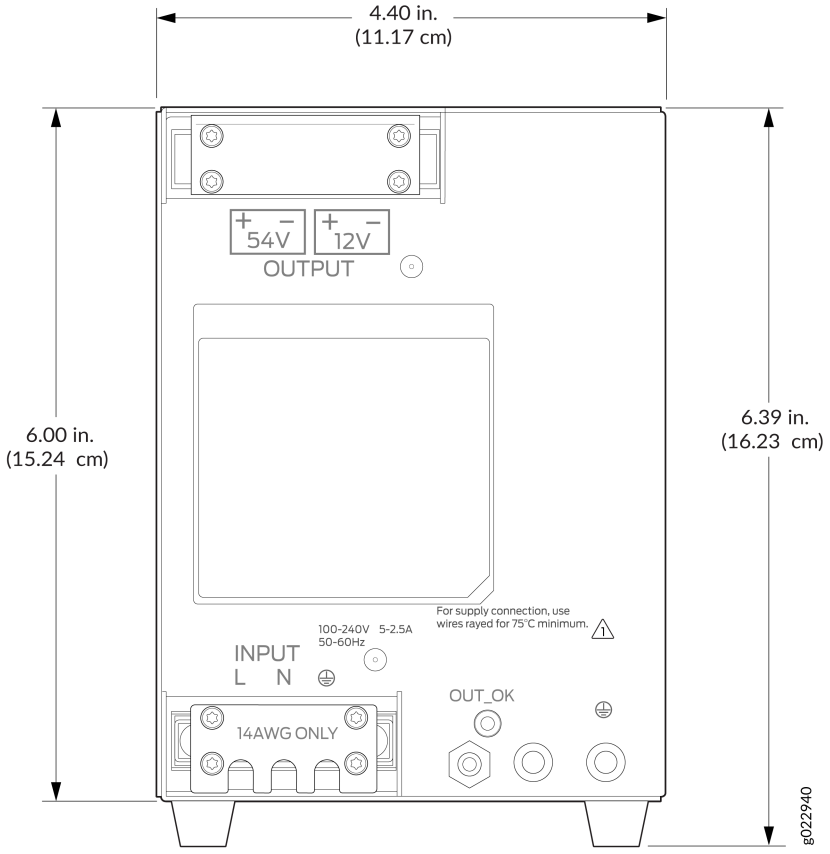

Figure 21: Clearance Requirements for Thermal Performance (Airflow) and Hardware Maintenance for the External DC PSU of the EX4100-H-12MP Switch

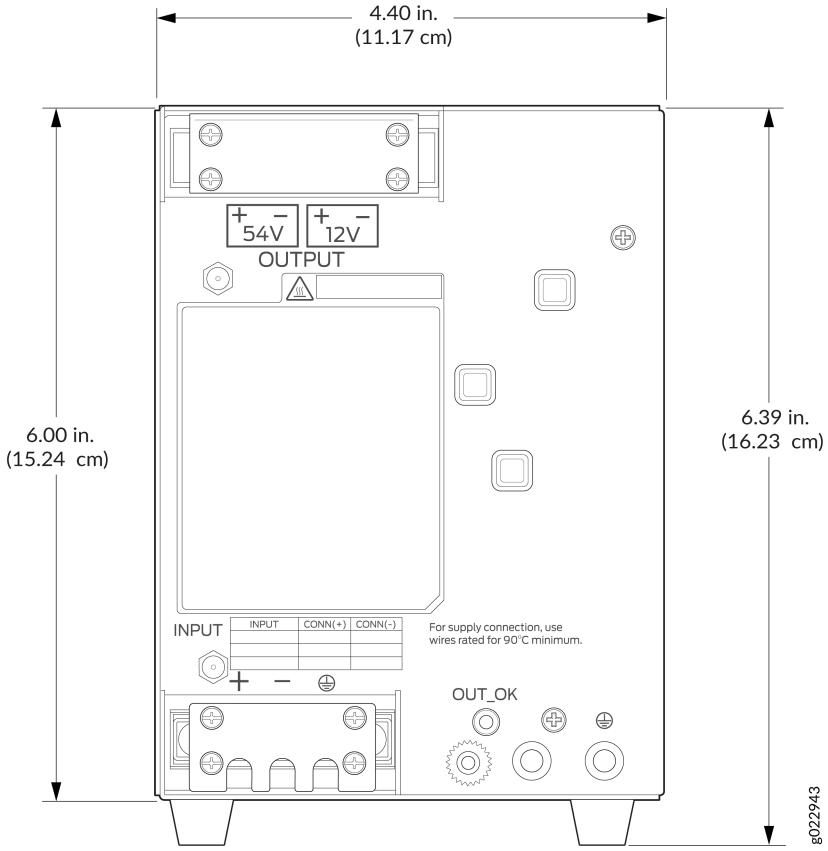

If you are mounting the PSU in a cabinet with other equipment ensure that the exhaust from other equipment does not blow into the intake vents of the chassis. Ensure temperature inside the enclosure conform to environmental specification. See Table 28 on page 60.

- Clearance requirements for thermal performance
  - Leave at least 2 in around the device except mounting side for proper airflow around the units and the fin surface.
- Clearance requirements for hardware maintenance
  - Leave at least 24 in around the device except mounting side for proper airflow around the units and the fin surface.

EX4100-H-12MP switch must be installed in cabinet or enclosure whether the switch is installed outdoor or indoor.

EX4100-H Network Cable and Transceiver Planning

IN THIS SECTION

- Pluggable Transceivers and Cables Supported on EX4100-H Switches | 67
- SFP+ Direct Attach Copper Cables for EX Series Switches | 68
- Overview of EX Series Switches: Fiber-Optic Cable Signal Loss, Attenuation, and Dispersion | 71
- Calculate the Fiber-Optic Cable Power Budget for EX Series Devices | 72
- Calculating the Fiber-Optic Cable Power Margin for EX Series Devices | 73

Pluggable Transceivers and Cables Supported on EX4100-H Switches

The Hardware Compatibility Tool lists the transceivers that EX4100-H switches support and provides general information about those transceivers.

NOTE: We recommend that you use only optical transceivers and optical connectors purchased from Juniper Networks with your Juniper Networks device.

NOTE: For EX4100-H-12MP switch, we recommend using shielded Ethernet cables for the RJ-45 1G and 2.5G ports.

CAUTION: The Juniper Networks Technical Assistance Center (JTAC) provides complete support for Juniper-supplied optical modules and cables. However, JTAC does not provide support for third-party optical modules and cables that are not qualified or supplied by Juniper Networks. If you face a problem running a Juniper device that uses third-party optical modules or cables, JTAC may help you diagnose host-related issues if the observed issue is not, in the opinion of JTAC, related to the use of the third-party optical modules or cables. Your JTAC engineer will likely request that you check the third-party optical module or cable and, if required, replace it with an equivalent Juniper-qualified component.

Use of third-party optical modules with high-power consumption (for example, coherent ZR or ZR+) can potentially cause thermal damage to or reduce the lifespan of the host equipment. Any damage to the host equipment due to the use of third-party optical modules or cables is the users' responsibility. Juniper Networks will accept no liability for any damage caused due to such use.

The Gigabit Ethernet (GbE) transceivers installed in EX4100-H switches support digital optical monitoring (DOM). You can view the diagnostic details for these transceivers by issuing the operational mode CLI command `show interfaces diagnostics optics` .

NOTE: The transceivers support DOM even if you install the transceivers in ports that you configured as Virtual Chassis ports (VCPs).

SFP+ Direct Attach Copper Cables for EX Series Switches

IN THIS SECTION

- Cable Specifications | 69
- List of DAC Cables Supported on EX Series Switches | 69
- Standards Supported by These Cables | 70

Small form-factor pluggable plus transceiver (SFP+) direct attach copper (DAC) cables, also known as Twinax cables, are suitable for in-rack connections between servers and switches. They are suitable for short distances, making them ideal for highly cost-effective networking connectivity within a rack and between adjacent racks.

NOTE: We recommend that you use only SFP+ DAC cables purchased from Juniper Networks with your Juniper Networks device.

CAUTION: The Juniper Networks Technical Assistance Center (JTAC) provides complete support for Juniper-supplied optical modules and cables. However, JTAC does not provide support for third-party optical modules and cables that are not qualified or

supplied by Juniper Networks. If you face a problem running a Juniper device that uses third-party optical modules or cables, JTAC may help you diagnose host-related issues if the observed issue is not, in the opinion of JTAC, related to the use of the third-party optical modules or cables. Your JTAC engineer will likely request that you check the third-party optical module or cable and, if required, replace it with an equivalent Juniper-qualified component.

Use of third-party optical modules with high-power consumption (for example, coherent ZR or ZR+) can potentially cause thermal damage to or reduce the lifespan of the host equipment. Any damage to the host equipment due to the use of third-party optical modules or cables is the users' responsibility. Juniper Networks will accept no liability for any damage caused due to such use.

Cable Specifications

EX Series switches support SFP+ passive DAC cables. The passive Twinax cable is a straight cable with no active electronic components. EX Series switches support 1 m, 3 m, 5 m, and 7 m long SFP+ passive DAC cables. See Figure 22 on page 69.

Figure 22: SFP+ Direct Attach Copper Cables for EX Series Switches

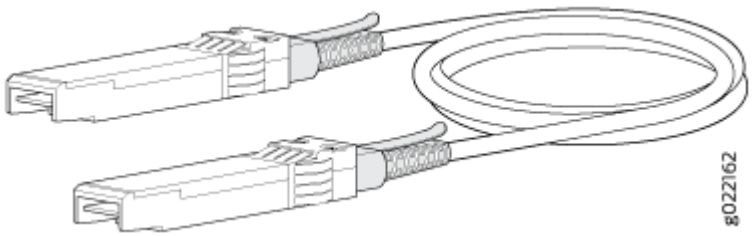

The cables are hot-removable and hot-insertable: You can remove and replace them without powering off the switch or disrupting switch functions. A cable comprises a low-voltage cable assembly that connects directly into two 10-Gigabit Ethernet (GbE) ports, one at each end of the cable. The cables use high-performance integrated duplex serial data links for bidirectional communication and are designed for data rates of up to 10 Gbps.

List of DAC Cables Supported on EX Series Switches

For the list of DAC cables supported on EX Series switches and the specifications of these cables, see the following references:

- EX2300—Hardware Compatibility Tool page for EX2300
- EX3200—Hardware Compatibility Tool page for EX3200

- EX3300—Hardware Compatibility Tool page for EX3300
- EX3400—Hardware Compatibility Tool page for EX3400
- EX4100 —Hardware Compatibility Tool for EX4100
- EX4100-F —Hardware Compatibility Tool for EX4100-F
- EX4100-H—Hardware Compatibility Tool for EX4100-H
- EX4000—Hardware Compatibility Tool for EX4000
- EX4200—Hardware Compatibility Tool page for EX4200
- EX4300—Hardware Compatibility Tool page for EX4300
- EX4400—Hardware Compatibility Tool page for EX4400
- EX4500—Hardware Compatibility Tool page for EX4500
- EX4550—Hardware Compatibility Tool page for EX4550
- EX4600—Hardware Compatibility Tool page for EX4600
- EX8208—Hardware Compatibility Tool page for EX8208
- EX8216—Hardware Compatibility Tool page for EX8216
- EX9251—Hardware Compatibility Tool page for EX9251
- EX9253—Hardware Compatibility Tool page for EX9253

Standards Supported by These Cables

The cables comply with the following standards:

- SFP mechanical standard SFF-843— see ftp://ftp.seagate.com/sff/SFF-8431.PDF.
- Electrical interface standard SFF-8432— see ftp://ftp.seagate.com/sff/SFF-8432.PDF.
- SFP+ Multi-Source Alliance (MSA) standards

Overview of EX Series Switches: Fiber-Optic Cable Signal Loss, Attenuation, and Dispersion

IN THIS SECTION

- Signal Loss in Multimode and Single-Mode Fiber-Optic Cable | 71
- Attenuation and Dispersion in Fiber-Optic Cable | 71

To determine the power budget and power margin needed for fiber-optic connections, you need to understand how signal loss, attenuation, and dispersion affect transmission. EX Series switches use various types of network cables, including multimode and single-mode fiber-optic cable.

Signal Loss in Multimode and Single-Mode Fiber-Optic Cable

Multimode fiber is large enough in diameter to allow rays of light to reflect internally (bounce off the walls of the fiber). Interfaces with multimode optics typically use LEDs as light sources. However, LEDs are not coherent light sources. They spray varying wavelengths of light into the multimode fiber, which reflects the light at different angles. Light rays travel in jagged lines through a multimode fiber, causing signal dispersion. When light traveling in the fiber core radiates into the fiber), higher-order mode loss (HOL) occurs. (Cladding consists of layers of lower-refractive index material in close contact with a core material of higher refractive index.) Together, these factors reduce the transmission distance of multimode fiber compared to that of single-mode fiber.

Single-mode fiber is so small in diameter that rays of light reflect internally through one layer only. Interfaces with single-mode optics use lasers as light sources. Lasers generate a single wavelength of light, which travels in a straight line through the single-mode fiber. Compared to multimode fiber, single-mode fiber has a higher bandwidth and can carry signals for longer distances. Single-mode fiber is consequently more expensive than multimode fiber.

Exceeding the maximum transmission distances can result in significant signal loss, which causes unreliable transmission.

Attenuation and Dispersion in Fiber-Optic Cable

An optical data link functions correctly provided that modulated light reaching the receiver has enough power to be demodulated correctly. *Attenuation* is the reduction in strength of the light signal during transmission. Passive media components such as cables, cable splices, and connectors cause attenuation. Although attenuation is significantly lower for optical fiber than for other media, it still

occurs in both multimode and single-mode transmissions. An efficient optical data link must transmit enough light to overcome attenuation.

Dispersion is the spreading of the signal over time. The following two types of dispersion can affect signal transmission through an optical data link:

- Chromatic dispersion, which is the spreading of the signal over time caused by the different speeds of light rays
- Modal dispersion, which is the spreading of the signal over time caused by the different propagation modes in the fiber

For multimode transmission, modal dispersion usually limits the maximum bit rate and link length. Chromatic dispersion or attenuation is not a factor.

For single-mode transmission, modal dispersion is not a factor. However, at higher bit rates and over longer distances, chromatic dispersion limits the maximum link length.

An efficient optical data link must have enough light to exceed the minimum power that the receiver requires to operate within its specifications. In addition, the total dispersion must be within the limits specified for the type of link in Telcordia Technologies document GR-253-CORE (Section 4.3) and International Telecommunications Union (ITU) document G.957.

When chromatic dispersion is at the maximum allowed, you can consider its effect as a power penalty in the power budget. The optical power budget must allow for the sum of component attenuation, power penalties (including those from dispersion), and a safety margin for unexpected power loss.

Calculate the Fiber-Optic Cable Power Budget for EX Series Devices

To ensure that fiber-optic connections have sufficient power for correct operation, calculate the link's power budget when planning fiber-optic cable layout and distances. This planning helps you ensure that fiber-optic connections have sufficient power for correct operation. The power budget is the maximum amount of power the link can transmit. When you calculate the power budget, you use a worst-case analysis to provide a margin of error. You use a worst-case analysis even though not all the parts of an actual system operate at the worst-case levels.

To calculate the worst-case estimate for a fiber-optic cable power budget (P_B) for the link:

1. Determine values for the link's minimum transmitter power (P_T) and minimum receiver sensitivity (P_R). In the following example, we measure both (P_T) and (P_R) in decibels relative to one milliwatt (dBm).

   P_T = – 15 dBm

   P_R = – 28 dBm

NOTE: See the specifications for your transmitter and receiver to find the minimum transmitter power and minimum receiver sensitivity.

2. Calculate the power budget (P_B) by subtracting (P_R) from (P_T):

   – 15 dBm – (–28 dBm) = 13 dBm

Calculating the Fiber-Optic Cable Power Margin for EX Series Devices

Before calculating the power margin, calculate the power budget (see Calculating the Fiber-Optic Cable Power Budget for EX Series Devices).

Calculate the link's power margin when planning fiber-optic cable layout and distances to ensure that fiber-optic connections have sufficient signal power to overcome system loss and still satisfy the minimum input requirements of the receiver for the required performance level. The power margin (P_M) is the amount of power available after you subtract attenuation or link loss (LL) from the power budget (P_B).

When you calculate the power margin, you use a worst-case analysis to provide a margin of error, even though not all parts of an actual system operate at worst-case levels. A power margin (P_M) greater than zero indicates that the power budget is sufficient to operate the receiver and that it does not exceed the maximum receiver input power. This means that the link will work. A (P_M) that is zero or negative indicates insufficient power to operate the receiver. See the specification for your receiver to find the maximum receiver input power.

To calculate the worst-case estimate for the power margin (P_M) for the link:

1. Determine the maximum value for link loss (LL) by adding estimated values for applicable link-loss factors—for example, use the sample values for various factors as provided in Table 31 on page 73 (here, the link is 2 km long and multimode, and the (P_B) is 13 dBm):

   Table 31: Estimated Values for Factors Causing Link Loss

Link-Loss Factor	Estimated Link-Loss Value	Sample (LL) Calculation Values
Higher-order mode losses (HOL)	• Multimode—0.5 dBm • Single mode—None	• 0.5 dBm • 0 dBm

Table 31: Estimated Values for Factors Causing Link Loss *(Continued)*

Link-Loss Factor	Estimated Link-Loss Value	Sample (LL) Calculation Values
Modal and chromatic dispersion	• Multimode—None, if product of bandwidth and distance is less than 500 MHz/km • Single mode—None	• 0 dBm • 0 dBm
Connector	0.5 dBm	This example assumes 5 connectors. Loss for 5 connectors: (5) * (0.5 dBm) = 2.5 dBm
Splice	0.5 dBm	This example assumes 2 splices. Loss for two splices: (2) * (0.5 dBm) = 1 dBm
Fiber attenuation	• Multimode—1 dBm/km • Single mode—0.5 dBm/km	This example assumes the link is 2 km long. Fiber attenuation for 2 km: • (2 km) * (1.0 dBm/km) = 2 dBm • (2 km) * (0.5 dBm/km) = 1 dBm
Clock Recovery Module (CRM)	1 dBm	1 dBm

NOTE: For information about the actual amount of signal loss caused by equipment and other factors, see your vendor documentation for that equipment.

2. Calculate the (P_M) by subtracting (LL) from (P_B):

   $P_B - LL = P_M$

   (13 dBm) – (0.5 dBm [HOL]) – ((5) * (0.5 dBm)) – ((2) * (0.5 dBm)) – ((2 km) * (1.0 dBm/km)) – (1 dB [CRM]) = P_M

   13 dBm – 0.5 dBm – 2.5 dBm – 1 dBm – 2 dBm – 1 dBm = P_M

   P_M = 6 dBm

The calculated power margin is greater than zero, indicating that the link has sufficient power for transmission. Also, the power margin value does not exceed the maximum receiver input power. Refer to the specification for your receiver to find the maximum receiver input power.

EX4100-H Management Cable Specifications and Pinouts

IN THIS SECTION

- Management Cable Specifications | **75**
- Console Port Connector Pinout Information | **76**
- USB Port Specifications for an EX Series Switch | **77**
- RJ-45 Management Port Connector Pinout Information | **78**
- RJ-45 Port, SFP Port, and SFP+ Port Connector Pinouts | **79**
- RJ-45 to DB-9 Serial Port Adapter Pinout Information | **83**

Management Cable Specifications

Table 32 on page 75 lists the specifications for the cables that connect the console and management ports to management devices.

Table 32: Specifications of Cables to Connect to Management Devices

Ports	Cable Specifications	Receptacle	Additional Information
RJ-45 Console port	CAT5e UTP (unshielded twisted pair) cable	RJ-45	Connect a Device to a Management Console Using an RJ-45 Connector

Table 32: Specifications of Cables to Connect to Management Devices *(Continued)*

Ports	Cable Specifications	Receptacle	Additional Information
Management Ethernet port	Ethernet cable with an RJ-45 connector. For EX4100-H-12MP switch use shielded ethernet cable with an RJ-45 connector.	RJ-45	Connect a Device to a Network for Out-of-Band Management
USB-C Console port	Mini-USB cable with standard-A and USB-C (5-pin) connector	Mini-USB	

Console Port Connector Pinout Information

The console port on a Juniper Networks device is an RS-232 serial interface that uses an RJ-45 connector to connect to a console management device. The default baud rate for the console port is 9600 baud.

Table 33 on page 77 provides the pinout information for the RJ-45 console connector.

NOTE: We no longer include the RJ-45 console cable with the DB-9 adapter as part of the device package. If the console cable and adapter are not included in your device package, or if you need a different type of adapter, you can order the following separately:

- RJ-45 to DB-9 adapter (JNP-CBL-RJ45-DB9)
- RJ-45 to USB-A adapter (JNP-CBL-RJ45-USBA)
- RJ-45 to USB-C adapter (JNP-CBL-RJ45-USBC)

If you want to use RJ-45 to USB-A or RJ-45 to USB-C adapter you must have X64 (64-Bit) Virtual COM port (VCP) driver installed on your PC. See, https://ftdichip.com/drivers/vcp-drivers/ to download the driver.

NOTE: If your laptop or desktop PC does not have a DB-9 plug connector pin and you want to connect your laptop or desktop PC directly to a device, use a combination of the RJ-45-to-DB-9 socket adapter and a USB-to-DB-9 plug adapter. You must provide the USB-to-DB-9 plug adapter.

Table 33: Console Port Connector Pinout Information

Pin	Signal	Description
1	NC	No connect
2	NC	No connect
3	TxD Output	Transmit data
4	GND	Signal ground
5	GND	Signal ground
6	RxD Input	Receive data
7	DCD Input	Data carrier detect
8	NC	No connect

USB Port Specifications for an EX Series Switch

Juniper Networks tested and officially supports the following USB flash drives for the USB port on all EX Series switches:

- RE-USB-1G-S
- RE-USB-2G-S
- RE-USB-4G-S

CAUTION: Any USB memory product not listed as supported for EX Series switches has not been tested by Juniper Networks. The use of any unsupported USB memory product could expose your EX Series switch to unpredictable behavior. Juniper Networks Technical Assistance Center (JTAC) can provide only limited support for issues related to unsupported hardware. We strongly recommend that you use only supported USB flash drives.

All USB flash drives used on EX Series switches must have the following features:

- USB 2.0 or later.
- Formatted with a FAT32 or MS-DOS file system.
- If the switch is running Junos OS Release 9.5 or earlier, the formatting method must use a primary boot record. Microsoft Windows formatting, by default, does not use a primary boot record. See the documentation for your USB flash drive for information about how your USB flash drive is formatted.

RJ-45 Management Port Connector Pinout Information

Table 34 on page 78 provides the pinout information for the RJ-45 connector for the management port on Juniper Networks devices.

Table 34: RJ-45 Management Port Connector Pinout Information

Pin	Signal	Description
1	TRP1+	Transmit/receive data pair 1
2	TRP1-	Transmit/receive data pair 1
3	TRP2+	Transmit/receive data pair 2
4	TRP3+	Transmit/receive data pair 3
5	TRP3-	Transmit/receive data pair 3

Table 34: RJ-45 Management Port Connector Pinout Information *(Continued)*

Pin	Signal	Description
6	TRP2-	Transmit/receive data pair 2
7	TRP4+	Transmit/receive data pair 4
8	TRP4-	Transmit/receive data pair 4

RJ-45 Port, SFP Port, and SFP+ Port Connector Pinouts

The following tables describe the connector pinout information for the RJ-45, SFP+, and SFP ports:

- Table 35 on page 79 for 10/100/1000BASE-T Ethernet Network Port Connector Pinout Information.
- Table 36 on page 80 for SFP Network Port Connector Pinout Information.
- Table 37 on page 81 for SFP+ Network Port Connector Pinout Information.

Table 35: 10/100/1000BASE-T Ethernet Network Port Connector Pinout Information

Pin	Signal	Description
1	TRP1+	Transmit/receive data pair 1 Negative Vport (in PoE models)
2	TRP1-	Transmit/receive data pair 1 Negative Vport (in PoE models)
3	TRP2+	Transmit/receive data pair 2 Positive Vport (in PoE models)
4	TRP3+	Transmit/receive data pair 3

Table 35: 10/100/1000BASE-T Ethernet Network Port Connector Pinout Information *(Continued)*

Pin	Signal	Description
5	TRP3-	Transmit/receive data pair 3
6	TRP2-	Transmit/receive data pair 2 Positive Vport (in PoE models)
7	TRP4+	Transmit/receive data pair 4
8	TRP4-	Transmit/receive data pair 4

Table 36: SFP Network Port Connector Pinout Information

Pin	Signal	Description
1	VeeT	Module transmitter ground
2	TX_Fault	Module transmitter fault
3	TX_Disable	Transmitter disabled
4	SDA	2-wire serial interface data line
5	SCL-	2-wire serial interface clock
6	MOD_ABS	Module absent
7	RS	Rate select
8	RX_LOS	Receiver loss of signal indication
9	VeeR	Module receiver ground

Table 36: SFP Network Port Connector Pinout Information *(Continued)*

Pin	Signal	Description
10	VeeR	Module receiver ground
11	VeeR	Module receiver ground
12	RD-	Receiver inverted data output
13	RD+	Receiver noninverted data output
14	VeeR	Module receiver ground
15	VccR	Module receiver 3.3 V supply
16	VccT	Module transmitter 3.3 V supply
17	VeeT	Module transmitter ground
18	TD+	Transmitter noninverted data input
19	TD-	Transmitter inverted data input
20	VeeT	Module transmitter ground

Table 37: SFP+ Network Port Connector Pinout Information

Pin	Signal	Description
1	VeeT	Module transmitter ground
2	TX_Fault	Module transmitter fault
3	TX_Disable	Transmitter disabled

Table 37: SFP+ Network Port Connector Pinout Information *(Continued)*

Pin	Signal	Description
4	SDA	2-wire serial interface data line
5	SCL-	2-wire serial interface clock
6	MOD_ABS	Module absent
7	RS0	Rate select 0, optionally controls SFP+ module receiver
8	RX_LOS	Receiver loss of signal indication
9	RS1	Rate select 1, optionally controls SFP+ transmitter
10	VeeR	Module receiver ground
11	VeeR	Module receiver ground
12	RD-	Receiver inverted data output
13	RD+	Receiver noninverted data output
14	VeeR	Module receiver ground
15	VccR	Module receiver 3.3-V supply
16	VccT	Module transmitter 3.3-V supply
17	VeeT	Module transmitter ground
18	TD+	Transmitter noninverted data input

Table 37: SFP+ Network Port Connector Pinout Information *(Continued)*

Pin	Signal	Description
19	TD-	Transmitter inverted data input
20	VeeT	Module transmitter ground

RJ-45 to DB-9 Serial Port Adapter Pinout Information

The console port on a Juniper Networks device is an RS-232 serial interface that uses an RJ-45 connector to connect to a management device such as a laptop or a desktop PC. If your laptop or desktop PC does not have a DB-9 plug connector pin and you want to connect your laptop or desktop PC to the device, use a combination of the RJ-45 to DB-9 socket adapter along with a USB to DB-9 plug adapter.

Table 38 on page 83 provides the pinout information for the RJ-45 to DB-9 serial port adapter.

Table 38: RJ-45 to DB-9 Serial Port Adapter Pinout Information

RJ-45 pin	Signal	DB-9 pin	Signal
1	NC	8	CTS
2	NC	6	DSR
3	TxD	2	RxD
4	GND	5	GND
6	RxD	3	TxD
7	DCD	4	DTR
8	NC	7	RTS

4

CHAPTER

Installation and Configuration

IN THIS CHAPTER

- Install the EX4100-H Switch | **85**
- Connect the EX4100-H to Power | **119**
- Connect the EX4100-H Switch to External Devices | **131**
- Connect the EX4100-H Switch to the Network | **135**
- Configure Junos OS on an EX4100-H Switch | **139**

Install the EX4100-H Switch

SUMMARY

This topic guides you through the steps to install EX4100-H switches.

IN THIS SECTION

- Unpack the EX4100-H Switch | **85**
- Packing List for an EX4100-H Switch | **86**
- Update Base Installation Data | **87**
- Mount an EX4100-H-12MP Switch Using Rack Mount Kit (with DIN Rail) Within a Cabinet | **88**
- Mount an EX4100-H-12MP Switch Using Rack Mount Kit (Fixed) Within a Cabinet | **92**
- Mount an EX4100-H-12MP Switch on a Ferrous Wall or Surface Using Magnet Pads Within a Cabinet | **95**
- Mount an EX4100-H-12MP Switch in a Desktop Orientation or on a Flat Surface Within a Cabinet | **101**
- Mount an EX4100-H-12MP Switch Using DIN Rail Mount Kit Within a Cabinet | **103**
- Unmounting an EX4100-H-12MP Switch from a DIN Rail Within a Cabinet | **106**
- Mount an EX4100-H-12MP Switch on a Wall Within a Cabinet | **107**
- Mount an EX4100-H Switch on Four Posts in a Rack or Cabinet | **112**
- Attaching the Physical Security Lock | **116**

Unpack the EX4100-H Switch

We ship the EX4100-H switches in a cardboard carton, secured with foam packing material. The carton has an accessory compartment.

CAUTION: The shipping carton completely protects the EX4100-H switches. Leave the switches safely in the carton until you are ready to begin installation.

To unpack the switch:

1. Move the shipping carton to a staging area as close to the installation site as possible, but where you have enough room to remove the system components.
2. Position the carton so that the arrows are pointing up.
3. Open the top flaps on the shipping carton.
4. Pull out the packing material holding the switch in place.
5. Verify the parts received against the inventory on the label attached to the carton (see "Packing List for an EX4100-H Switch" on page 86).
6. Save the shipping carton and packing materials in case you need to move or ship the switch later.

Packing List for an EX4100-H Switch

The switch shipment includes a packing list. Check the parts you receive with the switch against the items on the packing list. The packing list specifies the part number and provides a description of each part in your order. The parts shipped match the switch model you ordered (see "EX4100-H Models and Specifications" on page 23).

If any part on the packing list is missing, contact your customer service representative or contact Juniper customer care from within the U.S. or Canada by telephone at 1-888-314-5822. For international-dial or direct-dial options in countries without toll-free numbers, see https://www.juniper.net/support/requesting-support.html.

- Table 39 on page 86 provides details on inventory of components provided with EX4100-H-12MP models.

Table 39: Inventory of Components Provided with EX4100-H-12MP Switch Models

Component	Quantity
Switch	1
Power supply unit	1 (specific to the switch—AC or DC)

Table 39: Inventory of Components Provided with EX4100-H-12MP Switch Models *(Continued)*

Component	Quantity
AC power cord appropriate for your geographical location	1
Cable between the system and the PSU	1
DC cable	1 (not shipped with AC SKUs)
Dust covers	20 (preassembled): SFP (4), RJ45 (14), USB-A (1), USB-C (1)
Alarm connector	1 (preassembled to switch)
PSU terminal connectors	2 (preassembled to switch)
Documentation roadmap/warranty card	1
Juniper Networks Product Warranty	1
End User License Agreement	1

Update Base Installation Data

CAUTION: Update the installation base data if any addition or change to the installation base occurs or if the installation base is moved. Juniper Networks is not responsible for not meeting the hardware replacement SLA for products that do not have accurate installation base data.

Update your installation base at https://supportportal.juniper.net/s/CreateCase .

Mount an EX4100-H-12MP Switch Using Rack Mount Kit (with DIN Rail) Within a Cabinet

CAUTION:

1. The EX4100-H-12MP with an AC PSU or DC PSU must be installed in an IP 54 or a NEMA 4 enclosure for all outdoor/non-office installation. The switch must be installed in a cabinet or an enclosure regardless of the switch being installed outdoors or indoors.
2. The switch and the PSU must be installed in a suitable enclosure to prevent any personal injury due to access to live parts. The enclosure must be accessible by using a tool. The EX4100-H-12MP must have restricted access only.
3. Only skilled persons must be allowed to connect or do the wiring of AC PSU to AC mains.
4. In all mounting options, the cables must be routed and held in position with suitable cable organizer or holder, so that the cables do not hang from the switch or the PSU which can accidentally pull down the unit.
5. When the switch is installed in a cabinet, the temperature within the cabinet is greater than the room temperature outside the cabinet. Ensure the temperature inside the cabinet and around the switch conforms to device specification detailed in Table 28 on page 60.
6. For railways and power substation installations, use off-the-shelf (OTS) DIN metal stoppers adjacent to the switch and the PSU.
7. Footpads are preassembled onto the bottom of the switch and the PSU. If you do not require the footpads, you can unassemble them.

Before mounting the switch using rack mount kit (with DIN Rail) within a cabinet:

- Verify that the site meets the requirements described in "Environmental Requirements and Specifications for EX4100-H Switches" on page 57.
- Place the rack in its permanent location, allowing adequate clearance for airflow and maintenance, and secure it to the building structure.
- Read General Safety Guidelines and Warnings, with particular attention to Chassis and Component Lifting Guidelines.

Ensure that you have the following parts and tools available:

- Rack mounting bracket with DIN rail channel (EX4100-H-12-RM-DRK)
- DIN rail kit

1. The rack mounting bracket with DIN Rail channel is attached to the two-post rack for mounting the EX4100-H-12MP switch and PSU within a cabinet. The following is the figure of the rack mounting bracket with DIN Rail channel.

Figure 23: Rack Mounting Bracket with DIN Rail Channel

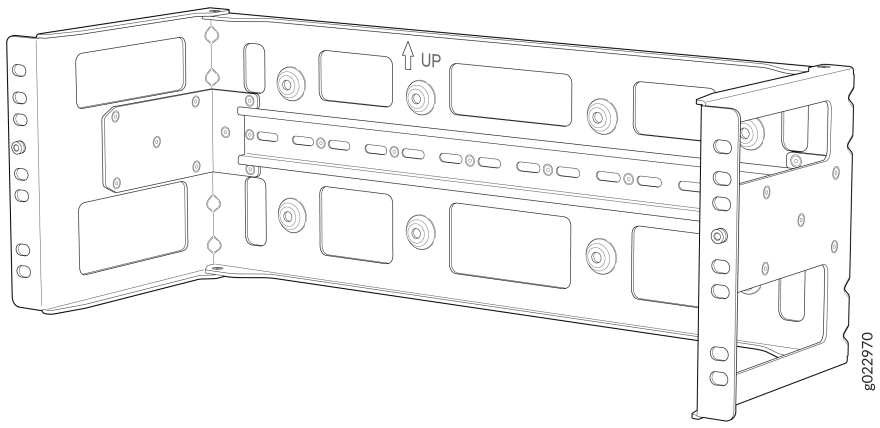

2. Attach the rack mounting bracket with DIN Rail channel to the two-post rack.

Figure 24: Attach rack mounting bracket with DIN Rail channel to the two-post rack

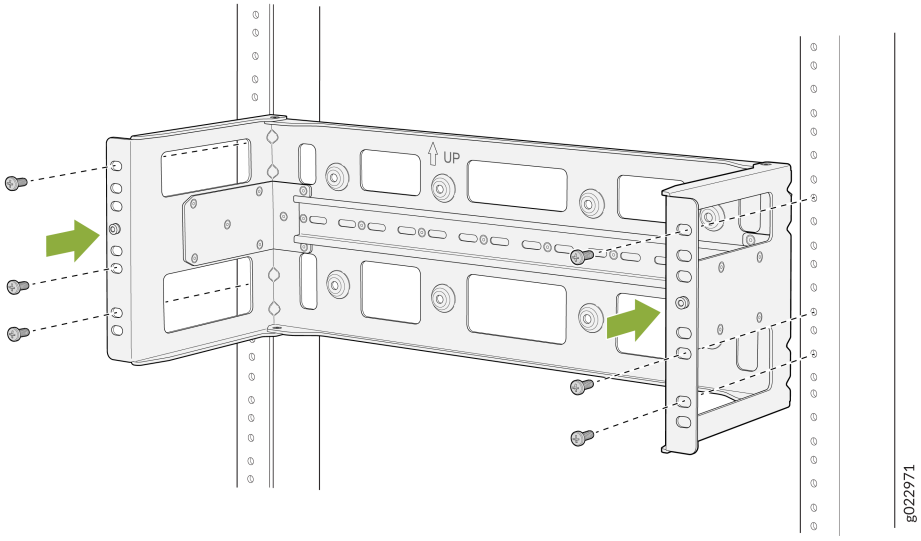

3. Attach the DIN Rail bracket to the switch.

Figure 25: Attach DIN Rail bracket to the switch

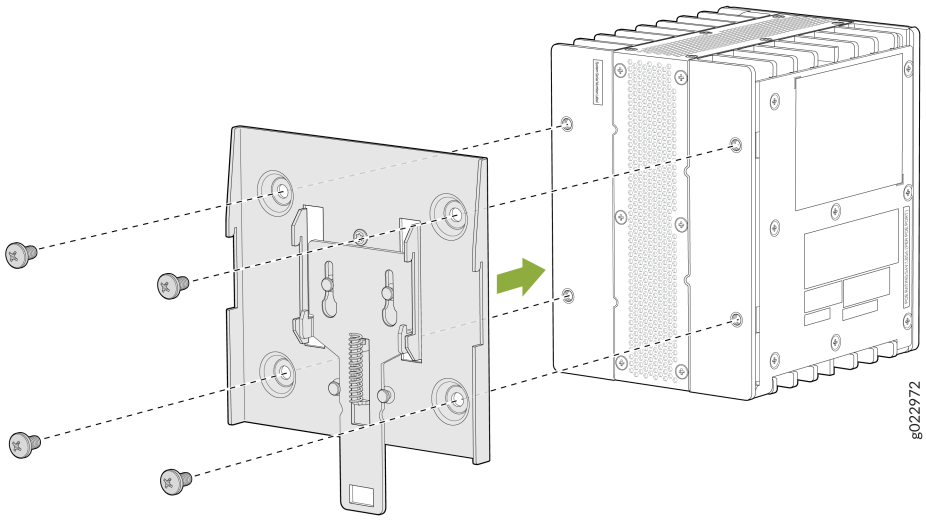

4. Attach the DIN Rail bracket to the PSU.

Figure 26: Attach DIN Rail bracket to the PSU

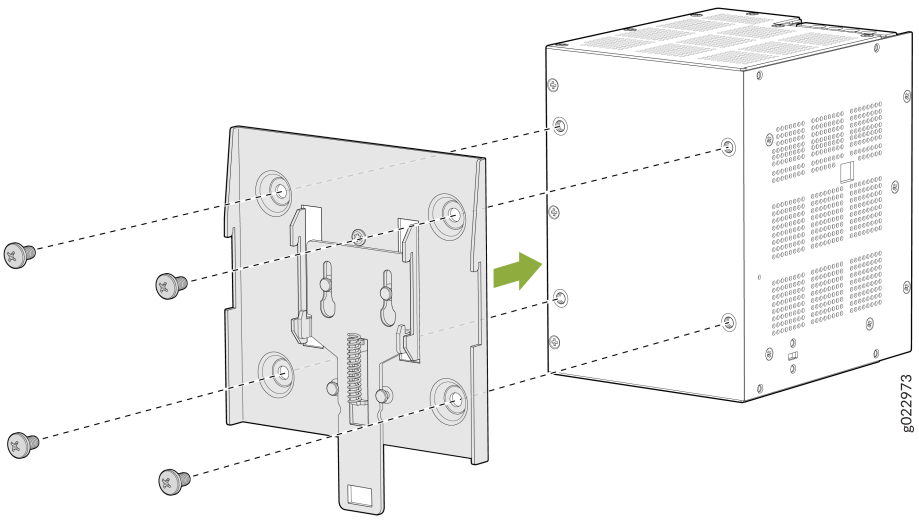

5. Mount the switch to the DIN Rail channel of the rack mounting bracket.

Figure 27: Mount switch to DIN Rail channel

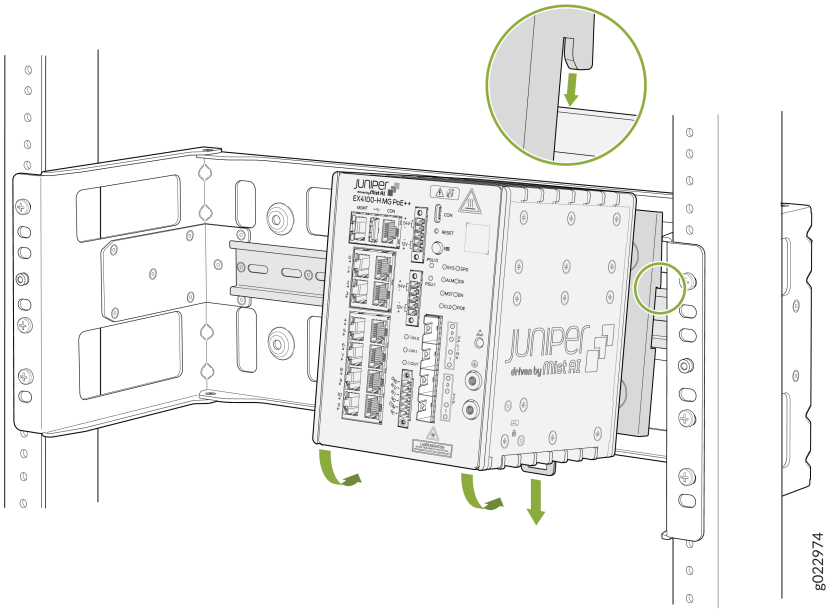

6. Mount the PSU to the DIN Rail channel of the rack mounting bracket.

Figure 28: Mount PSU to DIN Rail channel

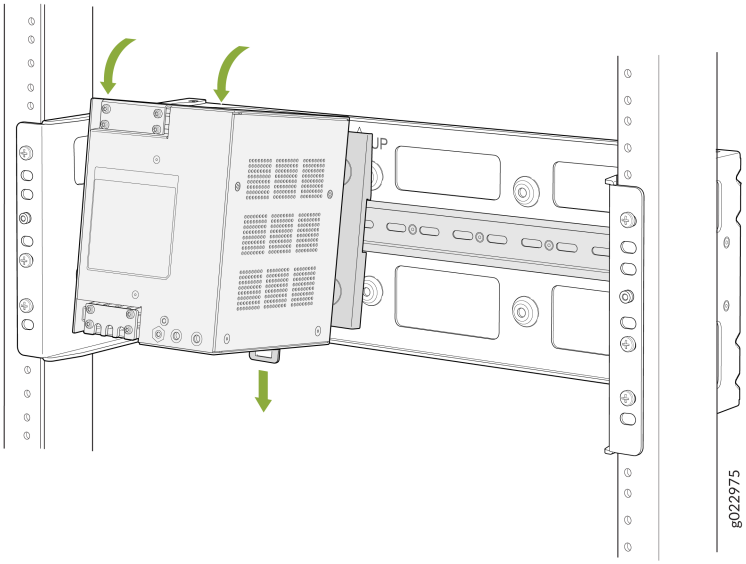

7. You have mounted the EX4100-H-12MP switch and PSU to the DIN Rail channel of the rack mounting bracket that is attached to the two-post mounting rack within a cabinet.

Figure 29: Switch and PSU Mounted using DIN Rail channel of the rack mounting bracket in the two-post rack within a cabinet

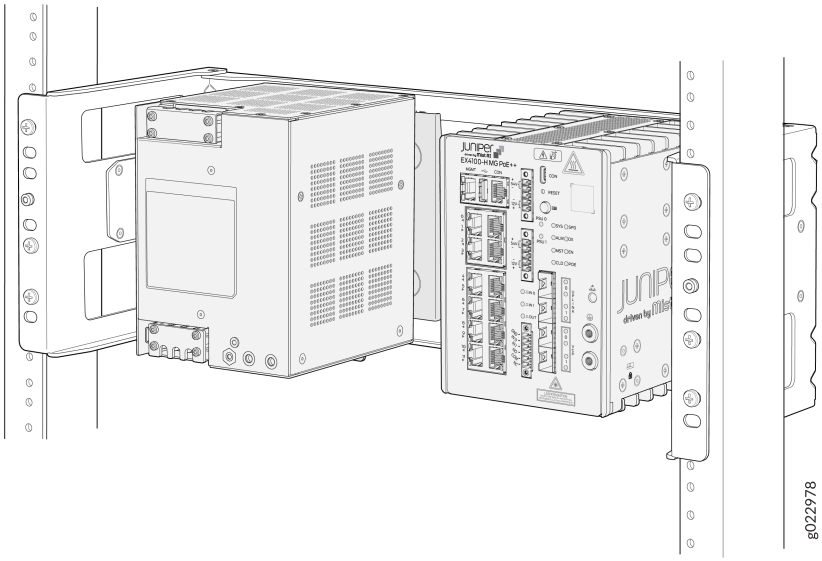

Mount an EX4100-H-12MP Switch Using Rack Mount Kit (Fixed) Within a Cabinet

CAUTION:

1. The EX4100-H-12MP with AC/DC PSU must be installed in IP 54 or NEMA 4 enclosure for all outdoor/non-office installation. EX4100-H-12MP switch must be installed in cabinet or enclosure whether the switch is installed outdoor or indoor.
2. The system and the PSU must be installed in a suitable enclosure to prevent any personal injury due to access to live parts. The enclosure shall be accessible by using a tool. The access to EX4100-H-12MP shall be restricted access only.
3. Only skilled person shall be allowed to connect/do the wiring of AC PSU to AC Mains.

4. In all mounting options, the cables shall be routed and held in position with suitable cable organizer/holder, so that cables do not hang from the switch/PSU which can accidentally pull down the unit.
5. When the switch is installed in a cabinet, the temperature within the cabinet is greater than the room temperature outside the cabinet. Ensure the temperature inside the cabinet and around the switch conforms to device specification detailed in Table 28 on page 60.
6. Footpads are preassembled onto the bottom of switch and PSU. If not required, you can unassemble the footpads.

Before mounting the switch in a rack:

- Verify that the site meets the requirements described in "Environmental Requirements and Specifications for EX4100-H Switches" on page 57.
- Place the rack in its permanent location, allowing adequate clearance for airflow and maintenance, and secure it to the building structure.
- Read General Safety Guidelines and Warnings, with particular attention to Chassis and Component Lifting Guidelines.

Ensure that you have the following parts and tools available:

- One rack mounting bracket
- Eight M5 L8 screws
- An EX4100-H-12-RMK kit

1. Assemble the PSU and switch to the rack mounting bracket by using M5 L8 screws.

NOTE: Recommended torque for mounting bracket to the switch and PSU : 22 +/- 0.5 Lb.in

Figure 30: Assemble the PSU and Switch to the rack mounting bracket with screws

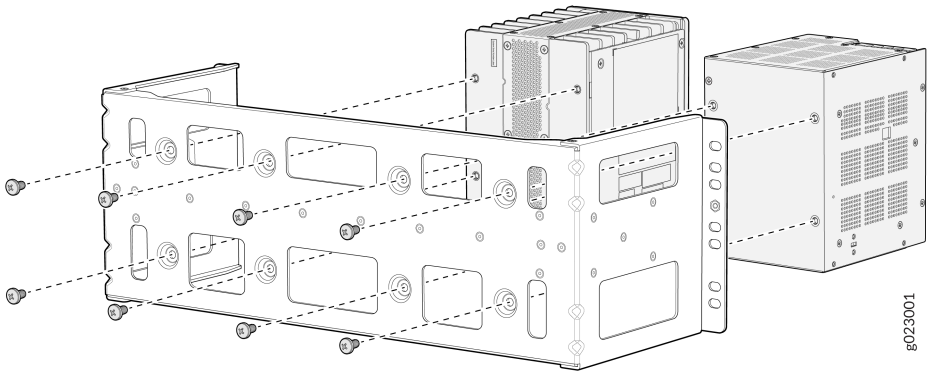

2. Attach the rack mounting bracket to the two-post rack within a cabinet.

Figure 31: Attach the rack mounting bracket to the rack

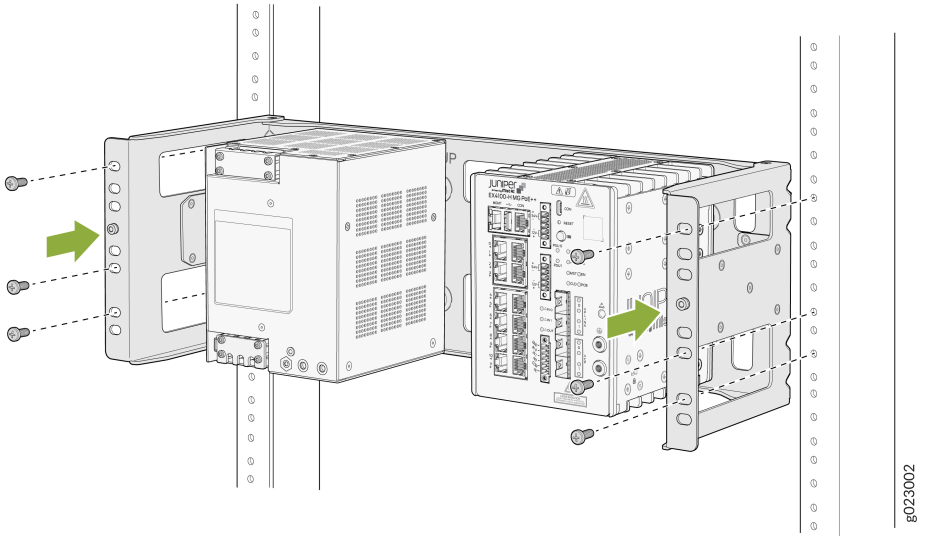

3. The switch and the PSU mounted to the rack mounting bracket that is attached to the two-post rack within cabinet.

Figure 32: The Switch and the PSU mounted to the rack mounting bracket

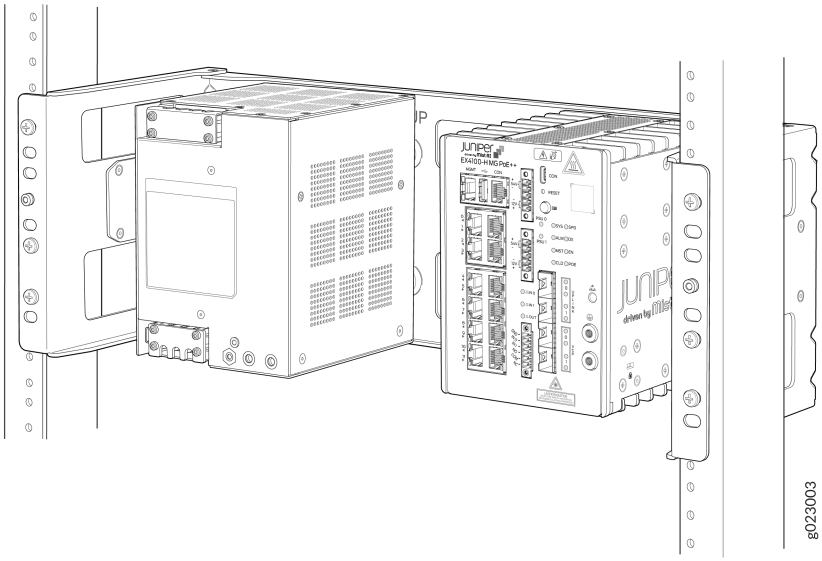

Mount an EX4100-H-12MP Switch on a Ferrous Wall or Surface Using Magnet Pads Within a Cabinet

CAUTION:

1. The EX4100-H-12MP with AC/DC PSU must be installed in an IP 54 or an NEMA 4 enclosure for all outdoor/non-office installation. EX4100-H-12MP switch must be installed in a cabinet or an enclosure whether the switch is installed outdoor or indoor.
2. The system and the PSU must be installed in a suitable enclosure to prevent any personal injury due to access to live parts. The enclosure shall be accessible by using a tool. The access to EX4100-H-12MP shall be restricted access only.
3. Only skilled person shall be allowed to connect or do the wiring of AC PSU to AC mains.

4. In all mounting options, the cables shall be routed and held in position with suitable cable organizer or holder, so that cables do not hang from the switch/PSU which can accidentally pull down the unit.
5. When the switch is installed in a cabinet, the temperature within the cabinet is greater than the room temperature outside the cabinet. Ensure the temperature inside the cabinet and around the switch conforms to device specification detailed in Table 28 on page 60.
6. Footpads are preassembled onto the bottom of the switch and the PSU. If not required, you can unassemble the footpads.

Before mounting the switch on a wall. ensure that you have the following parts and tools available:

- Two magnet support plates(one for the switch and the other for the PSU)
- Eight M5 L8 screws
- Two magnet pads

NOTE: Magnet mounting is to be done within the building only, not to be installed outside of building. Switch and PSU has to be mounted in a location where there is no direct sunlight on the switch and PSU. Switch and PSU should not be installed near to heat source as the temperature affects magnet performance.

NOTE:

- You can mount the units on a ferrous wall using magnet pads, at a height of no more than 2 m.
- Make sure the ferrous wall is smooth and free of any contaminants like oil, grease, dirt, etc., as otherwise the unit may fall.
- Ensure that the ferrous wall on which the switch is mounted isn't close to any area where any vibration or impact may occur. Also, you must not mount the product near any heat-generating area as it can cause the mounting to malfunction.
- Allow a sufficient space of 2 in. all around the switch for cooling. Insufficient space can lead to overheating of the switch chassis.

- The ferrous wall on which the switch will be mounted shall be flat and the surface shall be without any undulation. The ferrous wall shall be well supported and strong enough to support the switch.

1. Attach the magnet tray onto the rear of the switch.

NOTE: Recommended torque for mounting bracket to the switch and PSU : 22 +/- 0.5 Lb.in

Figure 33: Assemble the magnet tray onto the rear of the switch

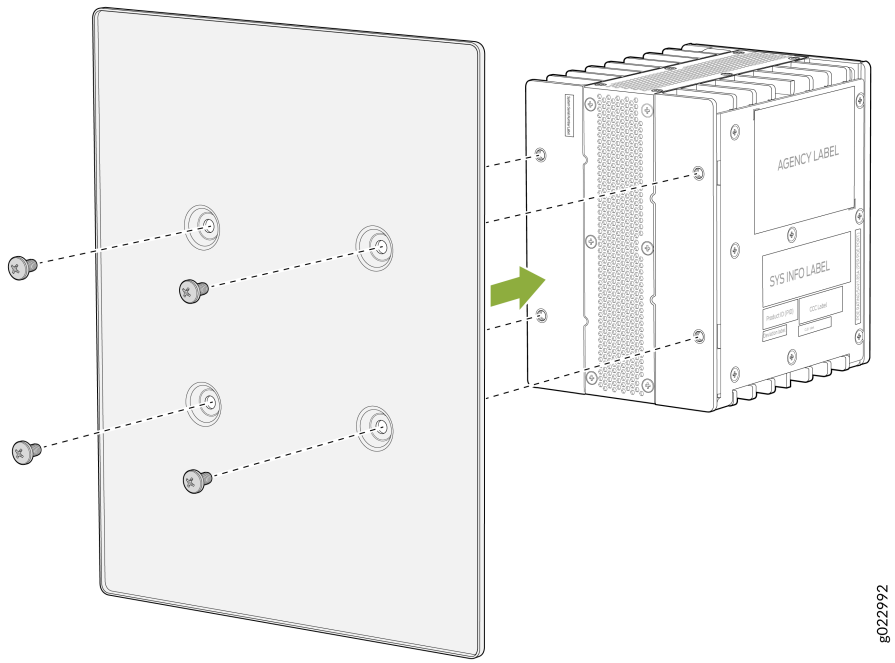

2. Assemble the magnet tray onto the rear of the PSU.

Figure 34: Assemble the magnet tray onto the rear of the PSU

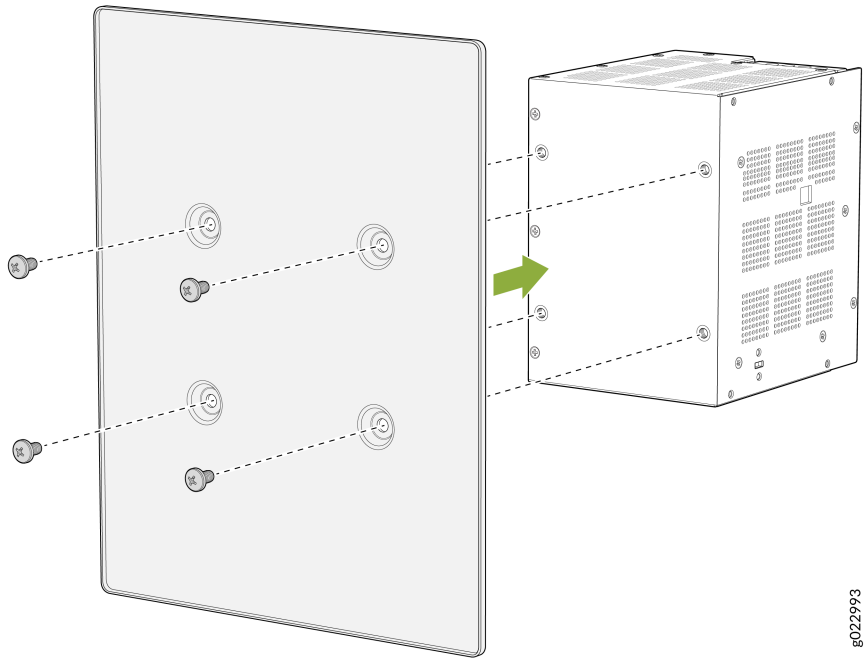

3. Attach the switch to the magnet pad.

Figure 35: Attach the switch on the magnet pad

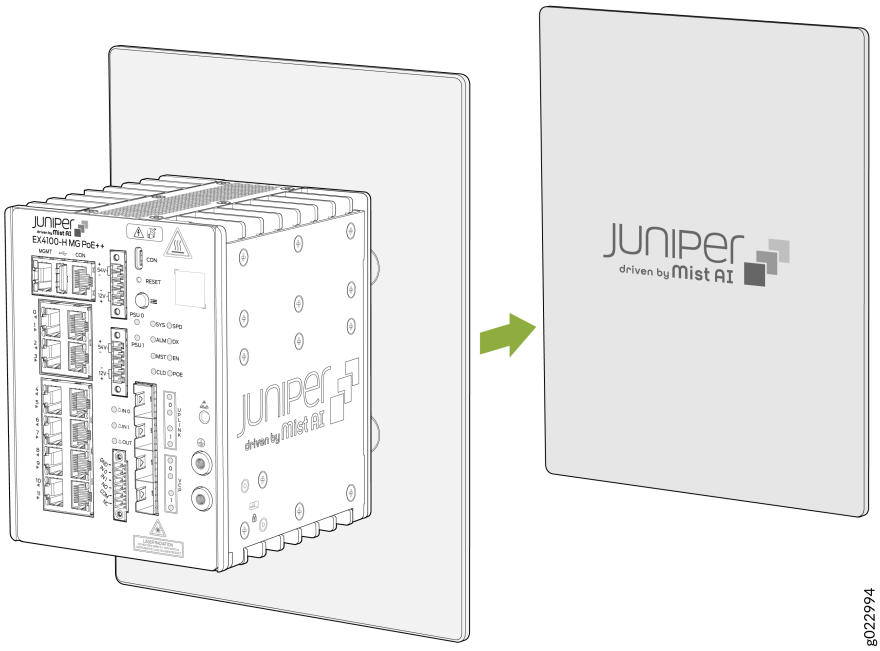

4. Attach the PSU to the magnet pad.

Figure 36: Attach the PSU on the magnet pad

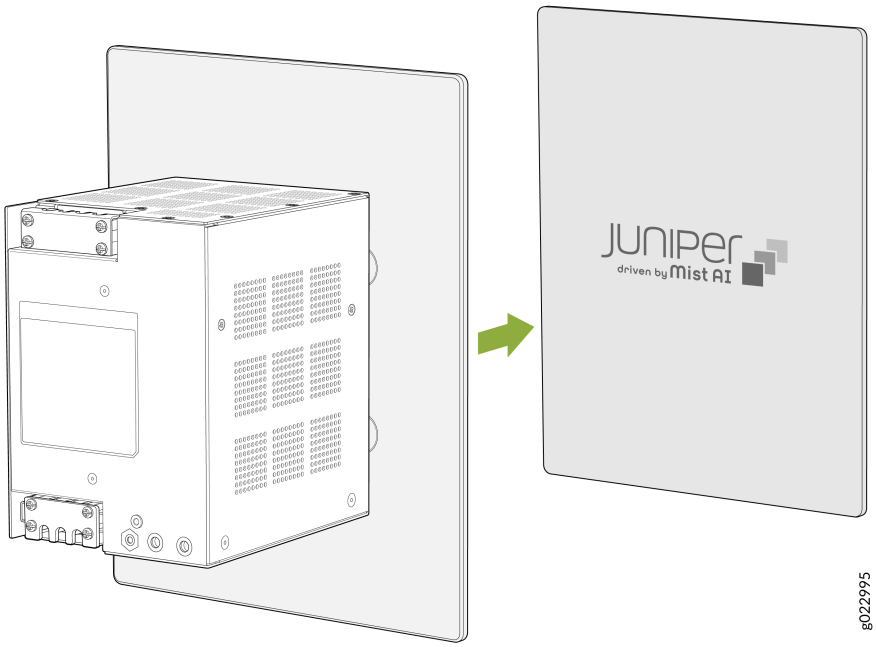

5. Switch and PSU mounted to the magnetic surface.

Figure 37: The switch and the PSU Mounted to the Magnetic Surface

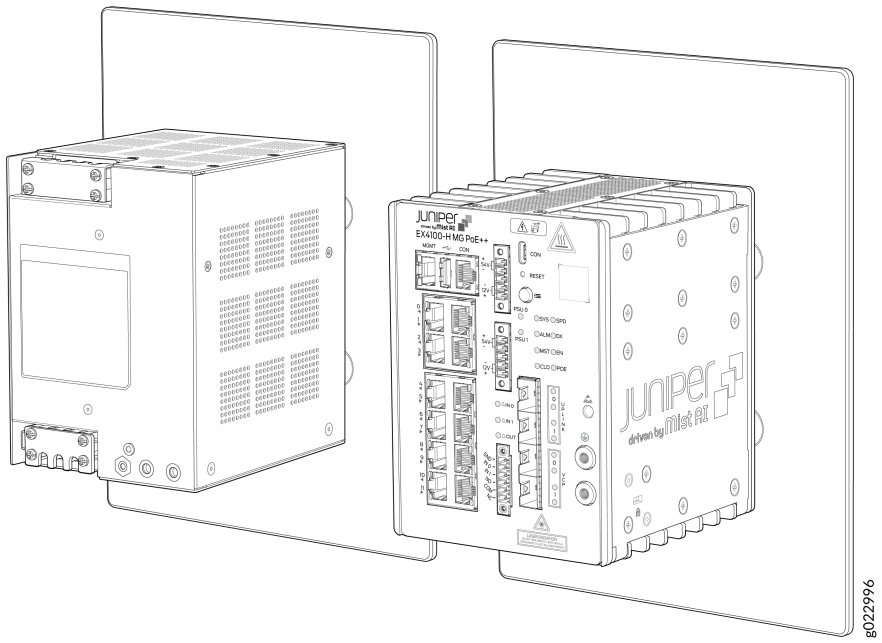

Mount an EX4100-H-12MP Switch in a Desktop Orientation or on a Flat Surface Within a Cabinet

CAUTION:

1. The EX4100-H-12MP with AC/DC PSU must be installed in IP 54 or NEMA 4 enclosure for all outdoor/non-office installation. EX4100-H-12MP switch must be installed in cabinet or enclosure whether the switch is installed outdoor or indoor.
2. The system and the PSU must be installed in a suitable enclosure to prevent any personal injury due to access to live parts. The enclosure shall be accessible by using a tool. The access to EX4100-H-12MP shall be restricted access only.
3. Only skilled person shall be allowed to connect/do the wiring of AC PSU to AC Mains.

4. In all mounting options, the cables shall be routed and held in position with suitable cable organizer/holder, so that cables do not hang from the switch/PSU which can accidentally pull down the unit.
5. When the switch is installed in a cabinet, the temperature within the cabinet is greater than the room temperature outside the cabinet. Ensure the temperature inside the cabinet and around the switch conforms to device specification detailed in Table 28 on page 60.
6. Footpads are preassembled onto the bottom of switch and PSU. For desktop mounting within a cabinet, do not unassemble the footpads, because using the footpads is mandatory.

You can mount the switch and its PSU on a desk or any other level surface within a cabinet. The surface or the area must not be an inclined.

NOTE: Allow a sufficient space of 2 in. all around the switch for cooling. Insufficient space can lead to overheating of the switch chassis.

Place the switch and the PSU on a flat surface or a desk within a cabinet.

Figure 38: The Switch and the PSU Mounted on a Desk

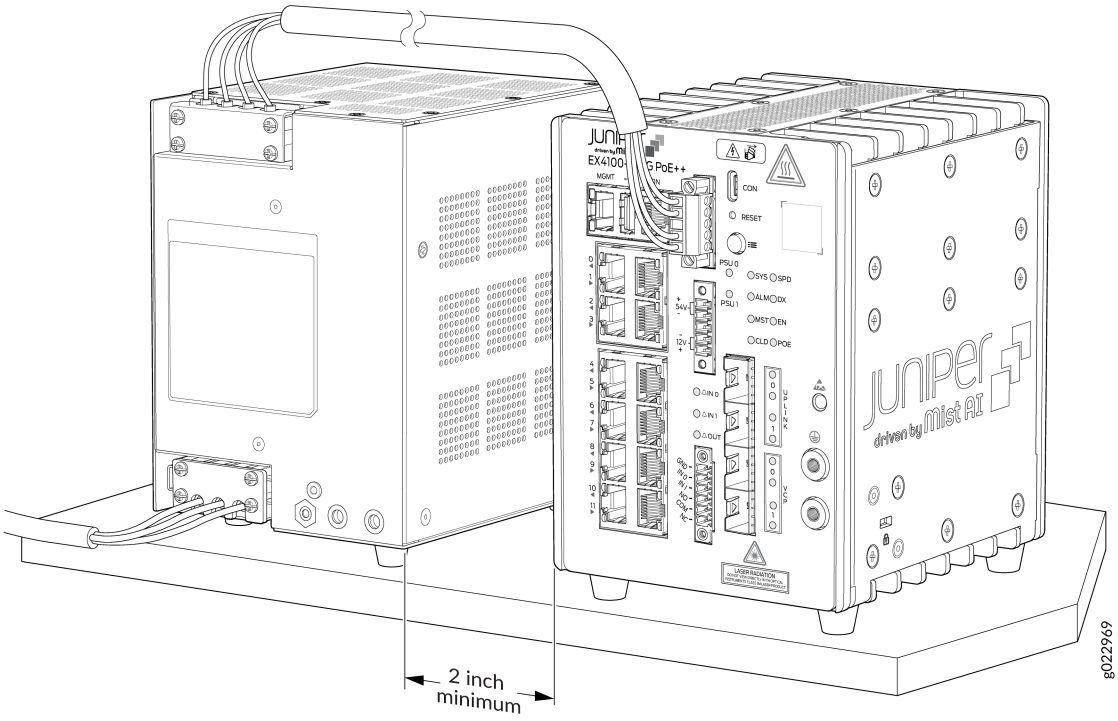

Mount an EX4100-H-12MP Switch Using DIN Rail Mount Kit Within a Cabinet

CAUTION:

1. The EX4100-H-12MP with AC/DC PSU must be installed in IP 54 or NEMA 4 enclosure for all outdoor/non-office installation. EX4100-H-12MP switch must be installed in cabinet or enclosure whether the switch is installed outdoor or indoor.
2. The system and the PSU must be installed in a suitable enclosure to prevent any personal injury due to access to live parts. The enclosure shall be accessible by using a tool. The access to EX4100-H-12MP shall be restricted access only.
3. Only skilled person shall be allowed to connect/do the wiring of AC PSU to AC Mains.

4. In all mounting options, the cables shall be routed and held in position with suitable cable organizer/holder, so that cables do not hang from the switch/PSU which can accidentally pull down the unit.
5. When the switch is installed in a cabinet, the temperature within the cabinet is greater than the room temperature outside the cabinet. Ensure the temperature inside the cabinet and around the switch conforms to device specification detailed in Table 28 on page 60.
6. For railways and power substation installations, use OTS (off the shelf) DIN metal stoppers adjacent to the unit and power supply.
7. Footpads are preassembled onto the bottom of switch and PSU. If not required, you can unassemble the footpads.

Ensure that you have the following parts and tools available:

- Two DIN mounting brackets (one for the switch and the other for the PSU)
- Eight M5 L8 screws
-

NOTE:

- The product can be mounted onto a standard 35 mm DIN Rail
- Allow a sufficient space of 2 in all around the switch for cooling. Insufficient space can lead to overheating of the switch chassis.

1. Assemble DIN mounting brackets onto the switch and the PSU.

NOTE: Recommended torque for mounting bracket to the switch and PSU : 22 +/- 0.5 Lb.in

Figure 39: Assemble DIN mounting brackets onto the switch and the PSU

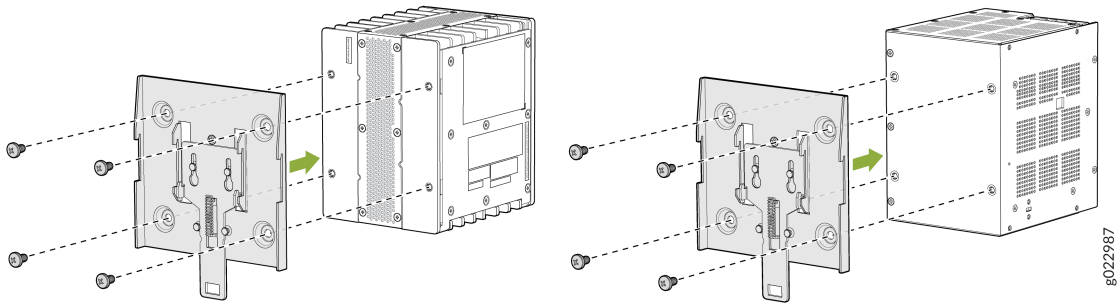

2. Hook on the switch and the PSU to the DIN channel top side.

Figure 40: Hook on the switch and PSU to the DIN channel top side

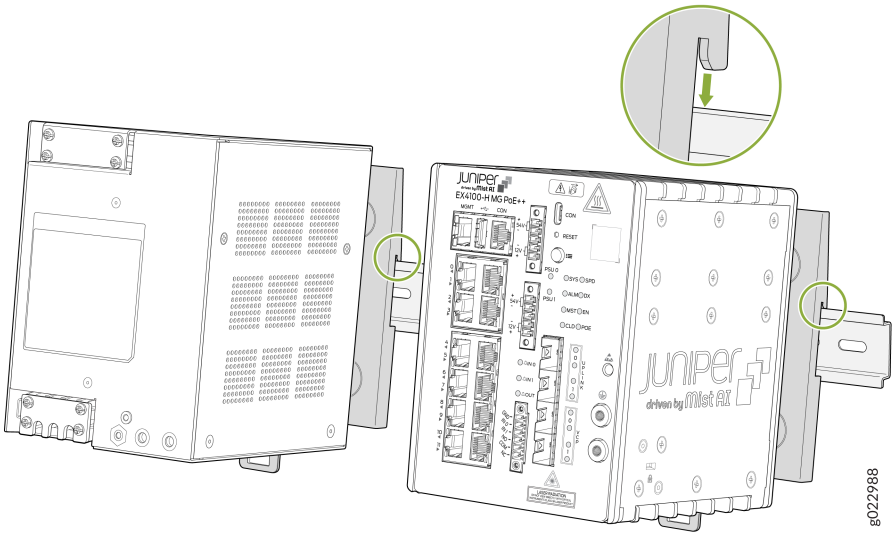

3. Pull the spring latch to engage the unit to the DIN channel.

Figure 41: Pull the spring latch to engage the unit to the DIN channel

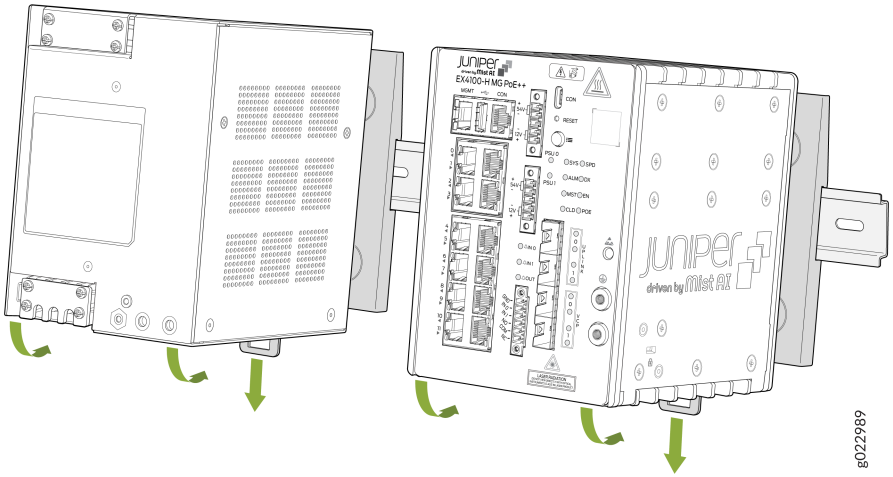

Unmounting an EX4100-H-12MP Switch from a DIN Rail Within a Cabinet

1. Pull the spring latch to disengage the switch and the PSU.

Figure 42: Pull the spring latch to disengage the switch and PSU

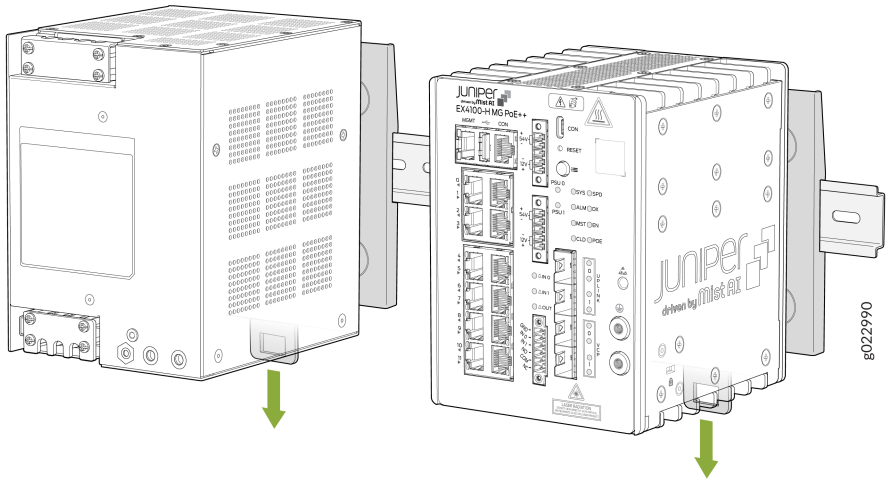

2. Remove the switch and the PSU from the DIN rail.

Figure 43: Remove the switch and PSU from the DIN rail

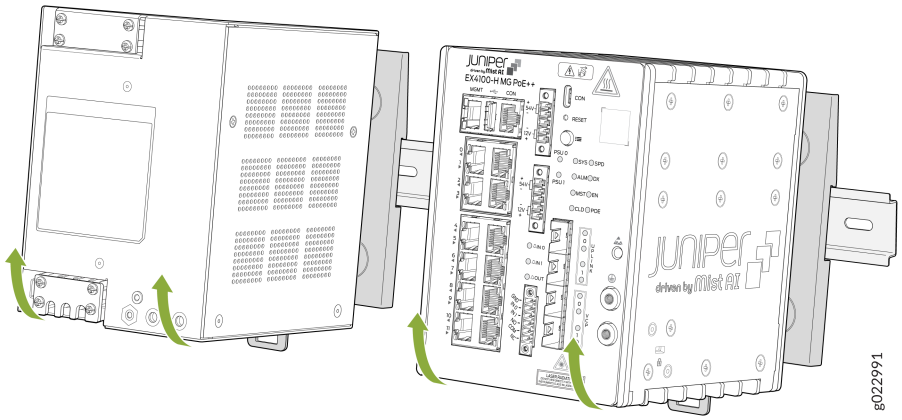

Mount an EX4100-H-12MP Switch on a Wall Within a Cabinet

CAUTION:

1. The EX4100-H-12MP with AC/DC PSU must be installed in IP 54 or NEMA 4 enclosure for all outdoor/non-office installation. EX4100-H-12MP switch must be installed in cabinet or enclosure whether the switch is installed outdoor or indoor.
2. The system and the PSU must be installed in a suitable enclosure to prevent any personal injury due to access to live parts. The enclosure shall be accessible by using a tool. The access to EX4100-H-12MP shall be restricted access only.
3. Only skilled person shall be allowed to connect/do the wiring of AC PSU to AC Mains.
4. In all mounting options, the cables shall be routed and held in position with suitable cable organizer/holder, so that cables do not hang from the switch/PSU which can accidentally pull down the unit.

5. When the switch is installed in a cabinet, the temperature within the cabinet is greater than the room temperature outside the cabinet. Ensure the temperature inside the cabinet and around the switch conforms to device specification detailed in Table 28 on page 60.

6. Footpads are preassembled onto the bottom of switch and PSU. If not required, you can unassemble the footpads.

Before mounting the switch on a wall:

- Verify that the site meets the requirements described in No Link Title .
- Read General Safety Guidelines and Warnings with particular attention to Chassis and Component Lifting Guidelines.

. Ensure that you have the following parts and tools available:

- Two wall-mounting brackets (provided in the wall-mounting kit)
- Eight wall-mounting bracket screws (provided in the wall-mounting kit)
- Eight mounting screws to attach the switch and the external PSU using M5 x 8 mm (provided in the wall-mounting kit)
- Hollow wall anchors (provided in the wall-mounting kit)
- A Number 2 Phillips (+) screwdriver (not provided)

You can mount an EX4100-H-12MP switch on a wall by using the separately orderable wall-mounting kit.

To mount the switch and the external PSU on a wall within a cabinet:

1. Attach the wall-mounting bracket to the switch.

NOTE: Recommended torque for mounting bracket to the switch and PSU : 22 +/- 0.5 Lb.in

Figure 44: Attach wall-mounting bracket to the switch

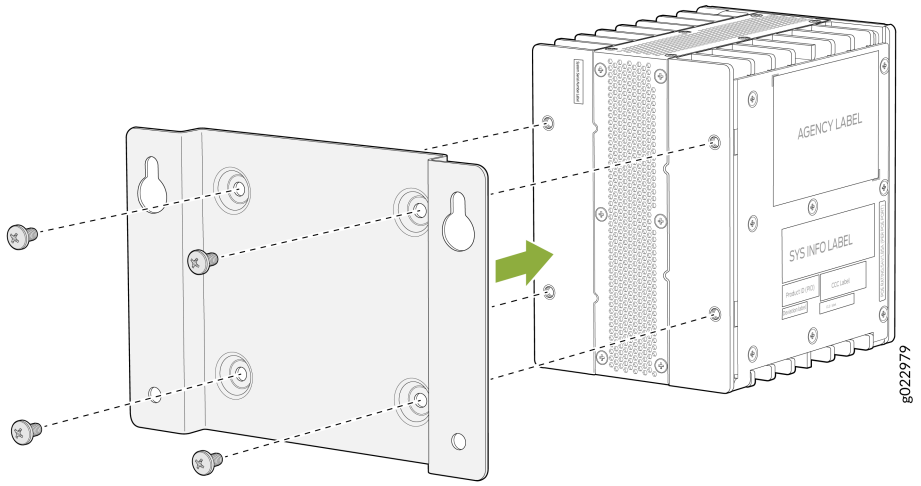

2. Attach wall-mounting bracket to the PSU.

Figure 45: Attach wall-mounting bracket to the PSU

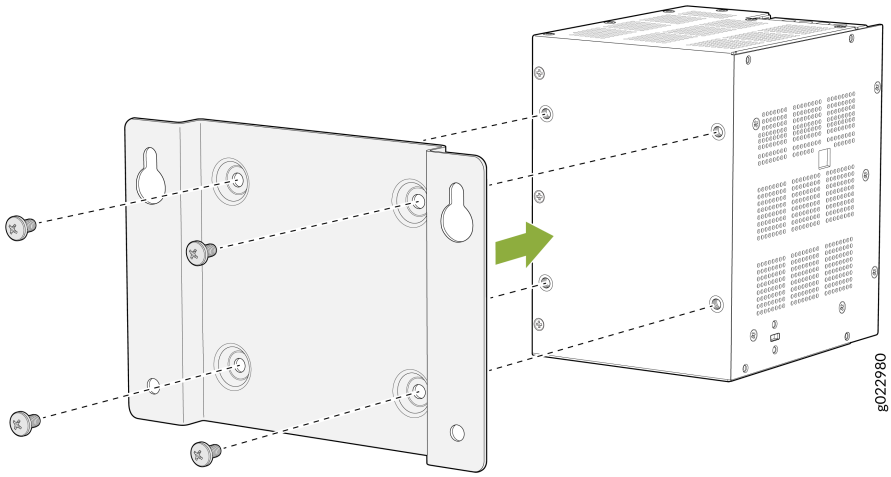

3. Drill holes as per the measurements in the following figure to install the mounting screws for the wall-mounting brackets of the switch. If the mounting screws are inserted in a wall board with no stud behind it, you must use dry wall anchors rated to support 75 lb (34 kg). Insert the screws into wall studs wherever possible to provide added support for the chassis.Tighten the screws only partway in, leaving about 1/4 in. (6 mm) distance between the head of the screw and the wall.

Figure 46: Measurements for installing mounting screws for the mounting brackets of the switch

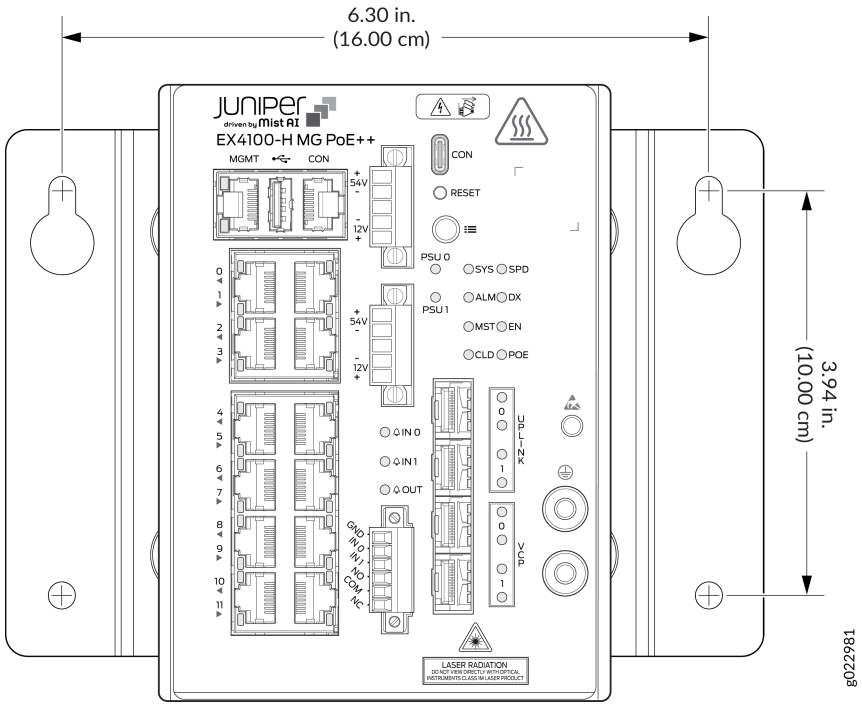

4. Drill holes as per the measurements in the following figure to install the mounting screws for the wall-mounting brackets of the PSU. If the mounting screws are inserted in a wall board with no stud behind it, you must use dry wall anchors rated to support 75 lb (34 kg). Insert the screws into wall studs wherever possible to provide added support for the PSU chassis.Tighten the screws only partway in, leaving about 1/4 in. (6 mm) distance between the head of the screw and the wall.

Figure 47: Measurements for installing mounting screws for the mounting brackets of the PSU

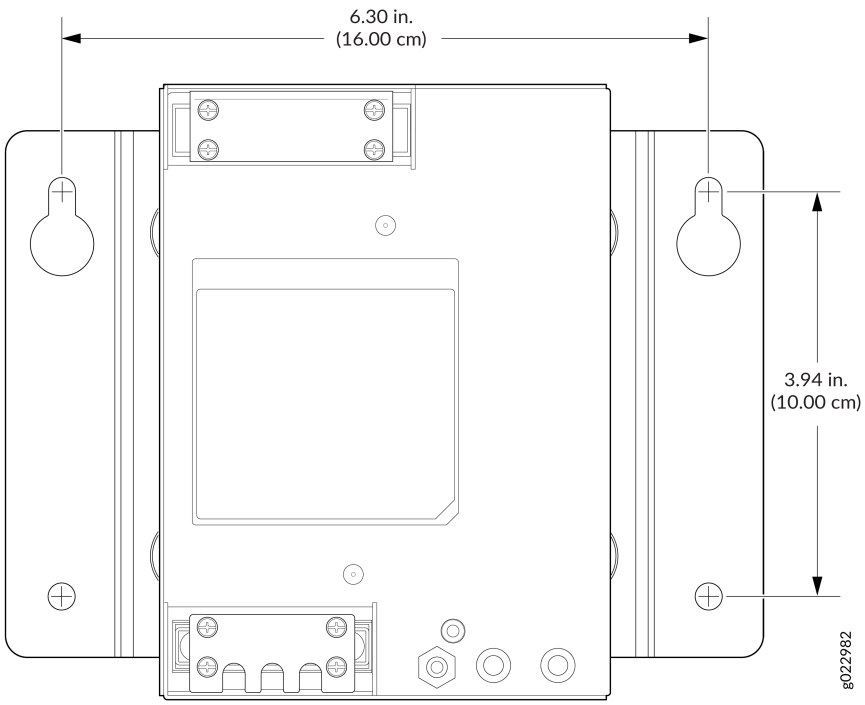

5. Secure the switch to the wall using screws. Tighten all mounting screws.

Figure 48: Secure the switch to the wall using screws

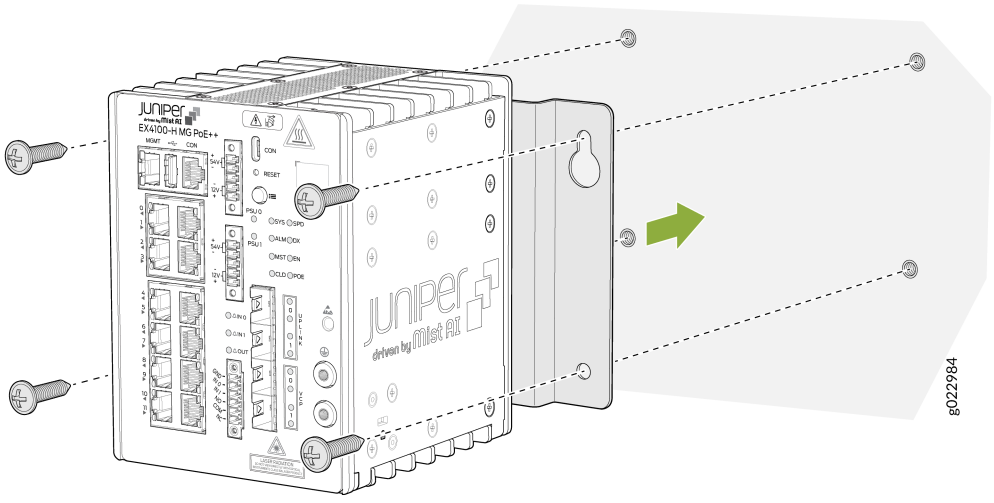

6. Secure the PSU to the wall using screws. Tighten all mounting screws.

Figure 49: Secure the PSU to the wall using screws

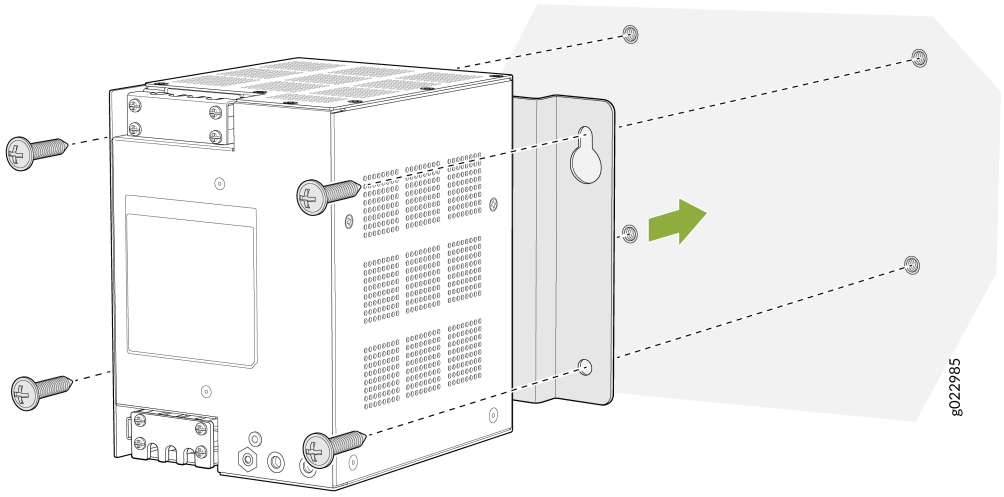

7. Switch and PSU installed on the wall within a cabinet.

Figure 50: Switch and PSU installed on the wall

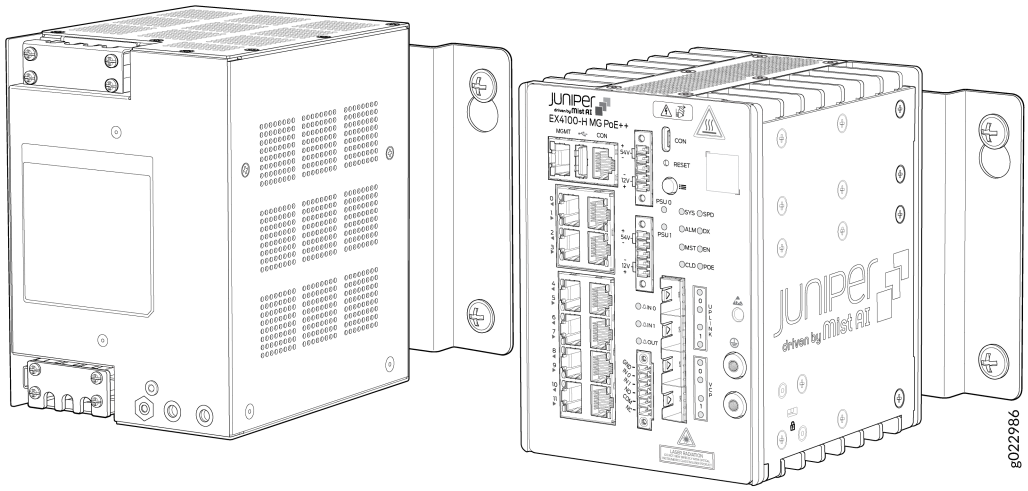

Mount an EX4100-H Switch on Four Posts in a Rack or Cabinet

- Verify that the site meets the requirements described in Environmental Requirements and Specifications

- Place the rack in its permanent location, allowing adequate clearance for airflow and maintenance, and secure it to the building structure.
- Read General Safety Guidelines and Warnings, with particular attention to Chassis and Component Lifting Guidelines.

Ensure that you have the following parts and tools available:

- Phillips (+) screwdriver, number 2
- 6 flat-head 4-40 mounting screws (provided with the four-post rack-mounting kit)
- 12 flat-head 4x6-mm Phillips mounting screws (provided with the four-post rack-mounting kit)
- One pair each of flush or 2-in.-recessed front-mounting brackets (provided with the four-post rack-mounting kit)
- One pair of side-mounting rails (provided with the four-post rack-mounting kit)
- One pair of rear-mounting blades (provided with the four-post rack-mounting kit)
- Screws to secure the chassis and the rear-mounting blades to the rack (not provided)

You can mount an EX4100-H switch on four posts of a 19-in. rack or cabinet by using the separately orderable four-post rack-mounting kit. (The remainder of this topic uses *rack* to mean *rack or cabinet*.)

NOTE: If you need to mount the switch in a recessed position on either a two-post rack or a four-post rack, you can use the 2-in.-recessed front-mounting brackets provided in the separately orderable four-post rack-mounting kit.

NOTE: One person must be available to lift the switch while another secures the switch to the rack.

CAUTION: If you are mounting multiple units on a rack, mount the heaviest unit at the bottom of the rack and mount the other units from the bottom of the rack to the top in decreasing order of the weight of the units.

To mount the switch on four posts in a rack:

1. Remove the switch from the shipping carton and place the switch on a flat, stable surface.
2. Attach the front-mounting brackets (either the flush or the 2-in.-recess front-mounting brackets) to the side mounting-rails by using the 6 4-40 flat-head Phillips mounting screws.

Figure 51: Attaching the Front-Mounting Bracket to the Side Mounting-Rail

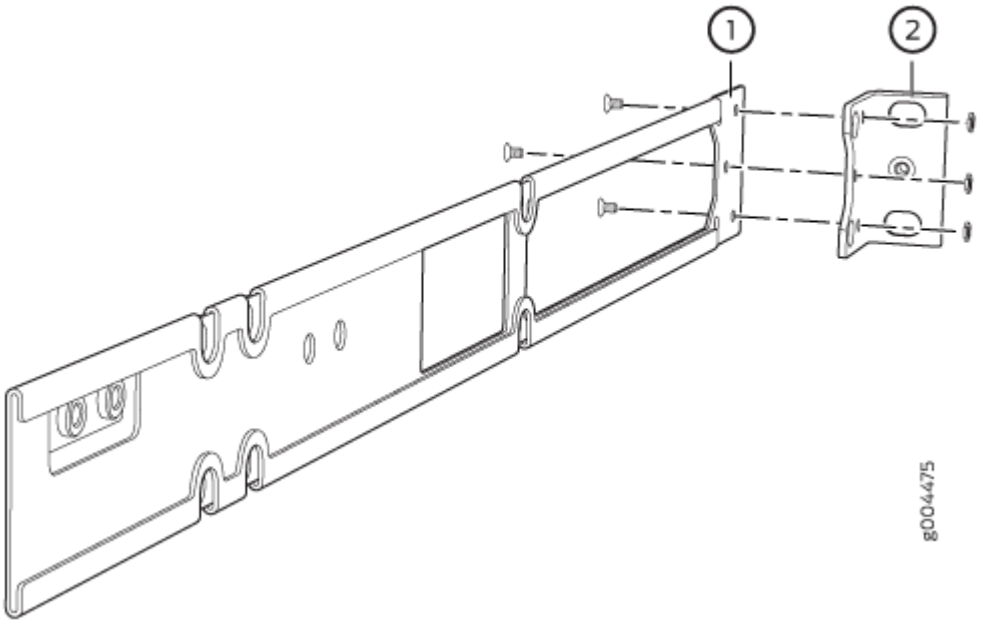

3. Align the side mounting rails along the side panels of the switch chassis. Align the two holes in the rear of the side mounting rails with the two holes on the rear of the side panel.
4. Align the side mounting rails along the side panels of the switch chassis and insert and tighten the twelve 4x6 mm Phillips flat-head mounting screws to secure the side panels to the two sides of the switch chassis.

Figure 52: Attaching the Side Mounting Rail to the Switch Chassis

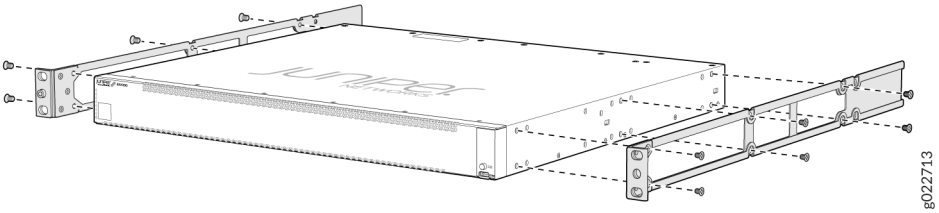

5. Have one person grasp both sides of the switch, lift the switch, and position it in the rack, aligning the holes on the side mounting rail with the threaded holes in the front post of the rack. Have the person align the bottom hole in both the front-mounting brackets with a hole in each rack rail, making sure that the chassis is level.

Figure 53: Mounting the Switch to the Front Posts in a Rack

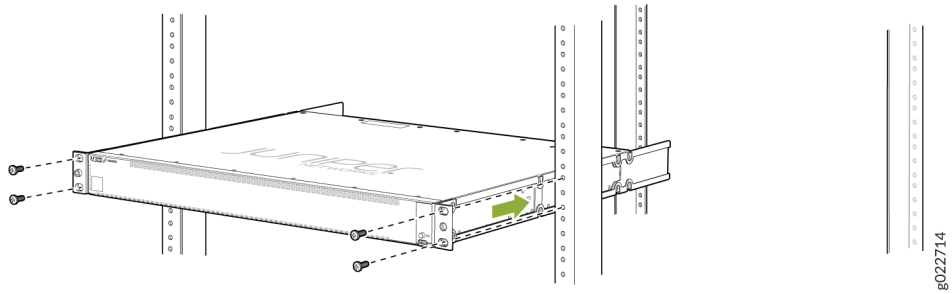

6. Have a second person secure the front of the switch to the rack by using the appropriate screws for your rack.
7. Slide the rear-mounting blades into the side mounting-rails.

Figure 54: Sliding the Rear-Mounting Blades into the Side Mounting Rails

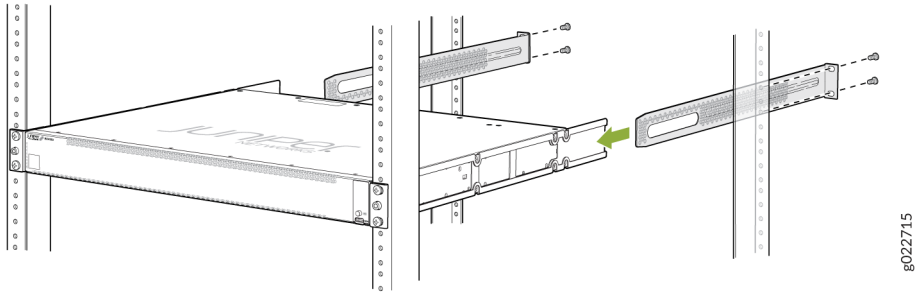

8. Attach the rear-mounting blades to the rear post by using the appropriate screws for your rack. Tighten the screws.

Figure 55: Chassis Fully Installed in the Rack

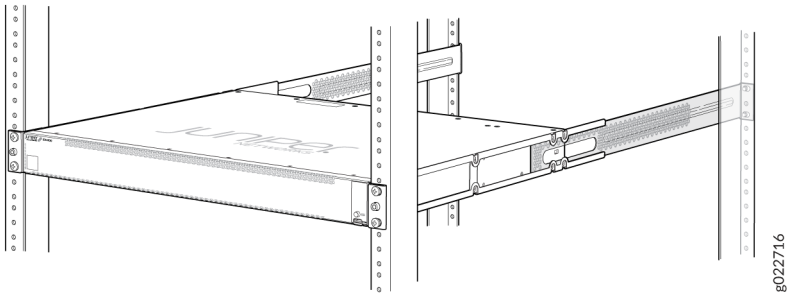

9. Ensure that the switch chassis is level by verifying that all the screws on the front of the rack are aligned with the screws at the back of the rack

Attaching the Physical Security Lock

You can attach the physical security lock to the EX4100-H-12MP switch and external PSUs. To attach the physical security lock to the switch and the PSU:

1. Insert the lock into the security slot on the switch chassis.

Figure 56: Insert the lock into the security slot on the switch chassis

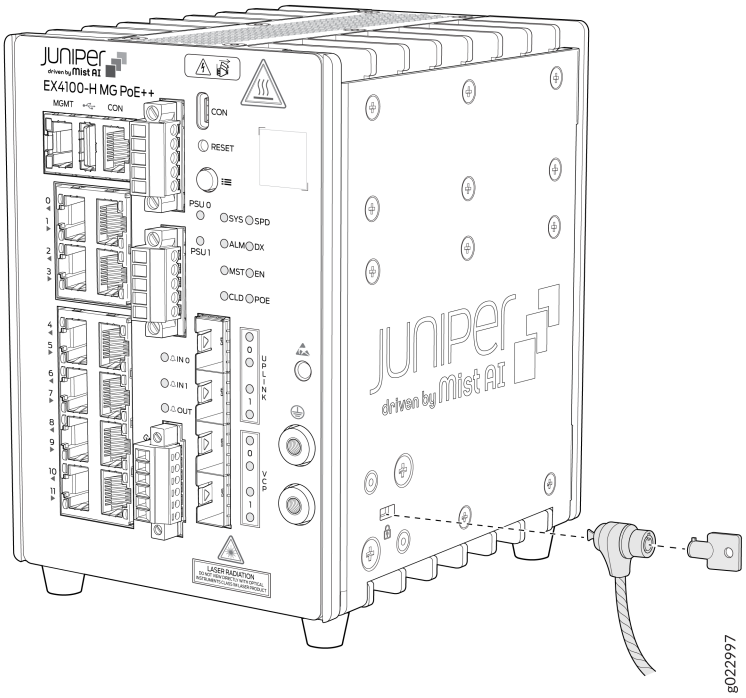

2. Set the lock to the locked position using the key.

Figure 57: Set the lock to the locked position using the key

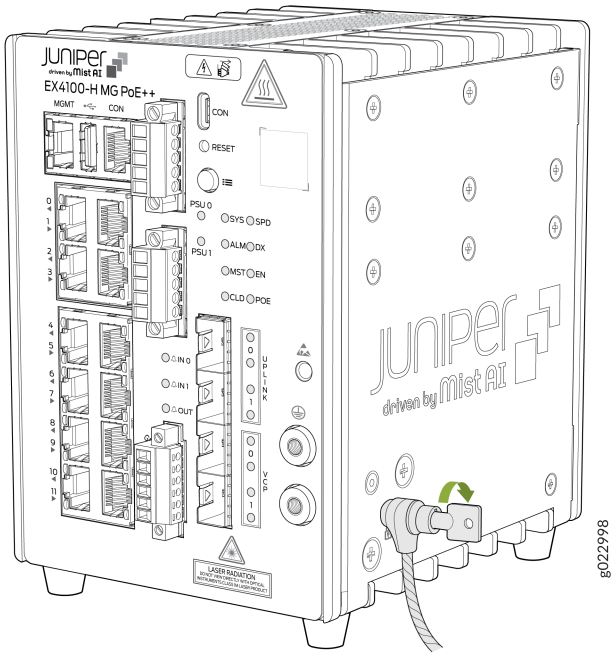

3. Insert the lock into the security slot on the PSU.

Figure 58: Insert the lock into the security slot on the PSU

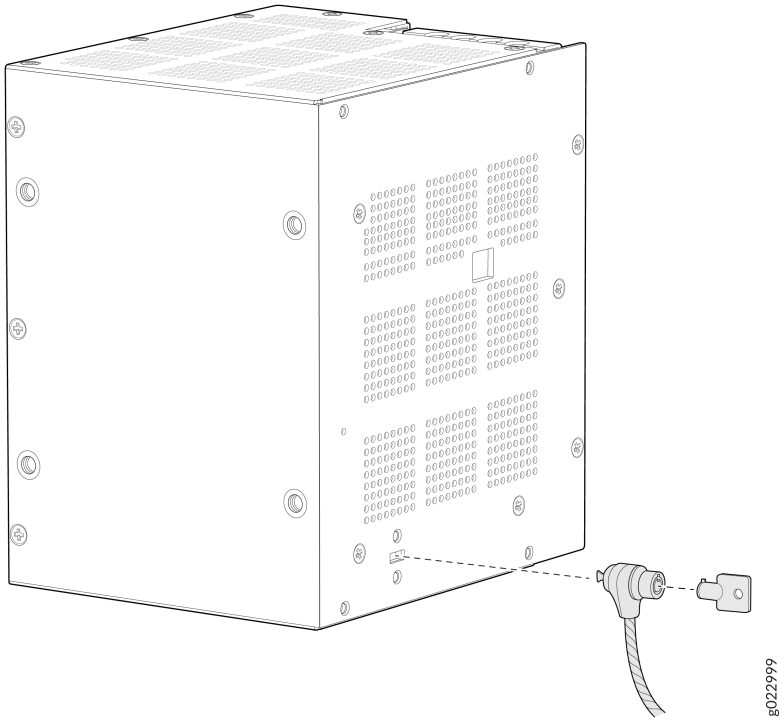

4. Set the lock to the locked position using the key.

Figure 59: Set the lock to the locked position using the key

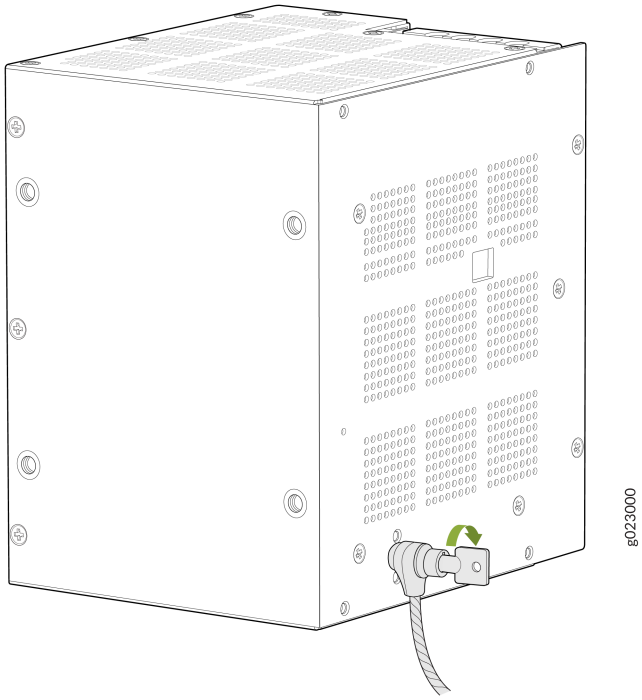

Connect the EX4100-H to Power

IN THIS SECTION

- Connect Earth Ground to an EX4100-H-12MP Switch | **120**
- Connect Power to an EX4100-H-12MP Switch | **123**

Connect Earth Ground to an EX4100-H-12MP Switch

To ensure proper operation and to meet safety and electromagnetic interference (EMI) requirements, you must connect the EX4100-H switch models to earth ground before you connect power to the switch. You must use the protective earthing terminal on the switch chassis to connect the switch to earth ground.

You must always ground the 340 W external PSU as well. It is recommended that you ground the EX4100-H-12MP switch and the external PSU.

You must install the EX4100-H switches in a restricted-access location and ensure that the chassis is always properly grounded. EX4100-H switches have a two-hole protective grounding terminal on the front panel of the chassis. Under all circumstances, use this grounding connection to ground the chassis. For AC-powered systems, you must also use the grounding wire in the AC power cord along with the two-hole grounding lug connection. This tested system meets or exceeds all applicable EMC regulatory requirements with the two-hole protective grounding terminal.

CAUTION: Ensure that a licensed electrician has attached the appropriate grounding lug to the grounding cable that you supply. Using a grounding cable with an incorrectly attached lug can damage the switch.

NOTE: The surface of the EX4100-H-12MP will be warm as this is a fanless unit and is based on ambient temperature. Issue `show chassis environment` to check if there are temperature-related alarms.

Before you connect earth ground to an EX4100-H switch, ensure that you have parts and tools listed in Table 40 on page 120 available:

Table 40: Parts Required for Connecting an EX4100-H Switch to Earth Ground

Item	Switch Models	Description
Earthing terminal location	EX4100-H-12MP	Front panel of the switch
Earthing terminal location	340 W external PSU for the EX4100-H-12MP	Front panel of the PSU

Table 40: Parts Required for Connecting an EX4100-H Switch to Earth Ground *(Continued)*

Item	Switch Models	Description
Grounding cable requirements	EX4100-H	6 AWG (13.3 mm^2), minimum 90° C wire, or as permitted by the local code—not provided
Grounding lug specifications	EX4100-H	Panduit LCD6-14A-L or equivalent —not provided
Screws to secure the grounding lug	EX4100-H	Two M5 X 10 mm stainless steel screws with washer—separately orderable
Tools required	EX4100-H	A Number 2 Phillips (+) screwdriver —not provided Electrostatic discharge (ESD) grounding strap—not provided

NOTE: The grounding kit (JNP-GL-2H6-M5-RA) specified in Table 5 on page 22 includes the lug and screws and is separately orderable.

To ground the EX4100-H switch to a proper ground reference:

NOTE: To attach grounding lug to the switch and PSU you use screwdriver type - Phillips #2 and torque is 22 +/-0.5 lb.in

1. Connect one end of the grounding cable to a proper earth ground, such as the cabinet in which the switch is mounted.
2. Place the grounding lug attached to the grounding cable over the protective earthing terminal on the front panel of the switch.

Figure 60: Connect the Grounding Cable to the EX4100-H-12MP Switch

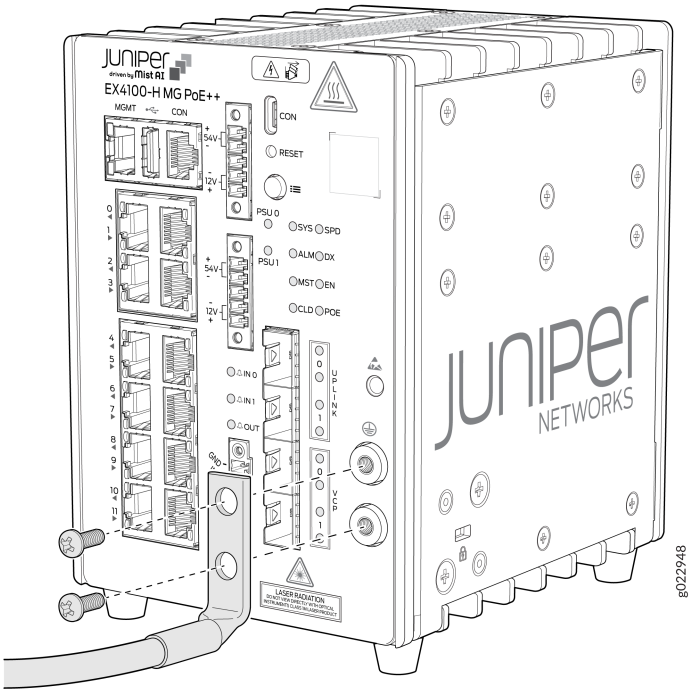

3. Secure the grounding lug to the protective earthing terminal with the screws.
4. Secure the grounding cable and ensure that it does not touch or block access to other switch components.

> **WARNING**: Ensure that the cable does not drape where people could trip over it.

5. For grounding the external PSU, connect one end of the grounding cable to a proper earth ground, such as the cabinet in which the PSU is mounted.
6. Place the grounding lug attached to the grounding cable over the protective earthing terminal on the front panel of the PSU.

Figure 61: Ground the External PSU of the EX4100-H-12MP Switch

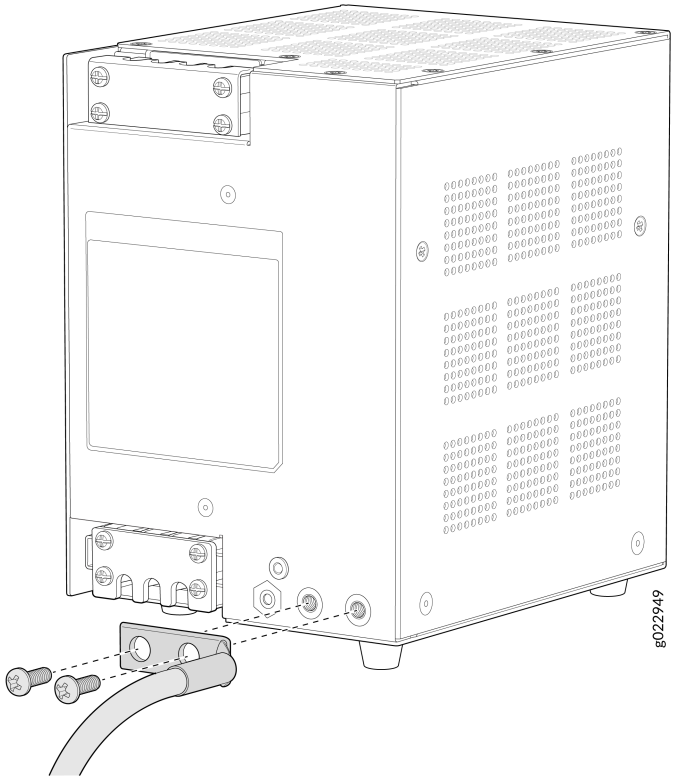

7. Secure the grounding lug to the protective earthing terminal of the PSU with the screws.
8. Secure the grounding cable and ensure that it does not touch or block access to other PSU components.

Connect Power to an EX4100-H-12MP Switch

Before you connect power to the switch, ensure that you have the following parts and tools available:

- A power cord appropriate for your geographical location

Ensure that you have connected the device chassis to earth ground. The power cords also provide additional grounding when you connect the power supply in the switch to a grounded power outlet by using the power cord appropriate for your geographical location (see No Link Title).

CAUTION: For installations that require a separate grounding conductor to the chassis, ensure you have a licensed electrician complete this connection before you connect the

switch to power. For instructions on connecting earth ground, see Figure 60 on page 122.

CAUTION: The power source must be switched off before starting this procedure and switched on only after completing this procedure.

PSU output connections to the switch and PSU inlet connections **should not be done** when the AC/DC power cord is connected to the main source.

Connect the AC PSM to AC mains through a 2-hole circuit breaker rated at 16 A or as per local code.

CAUTION: To avoid the system restart at 100% voltage dip, use of two PSU configuration is recommended.

To connect power to the switch:

1. Remove the protective terminal cover from the input power terminal of the PSU.

NOTE: An initial batch of PSUs were shipped with torx screws (hexagonal shaped screws) for the protective terminal covers (input and output) of the PSU. If using a PSU with this type of screw; to install or remove the protective terminal covers from the PSU you use screwdriver type Torx 10 with torque 3.5 lb.in

Figure 62: Remove the protective terminal cover from the input power terminal

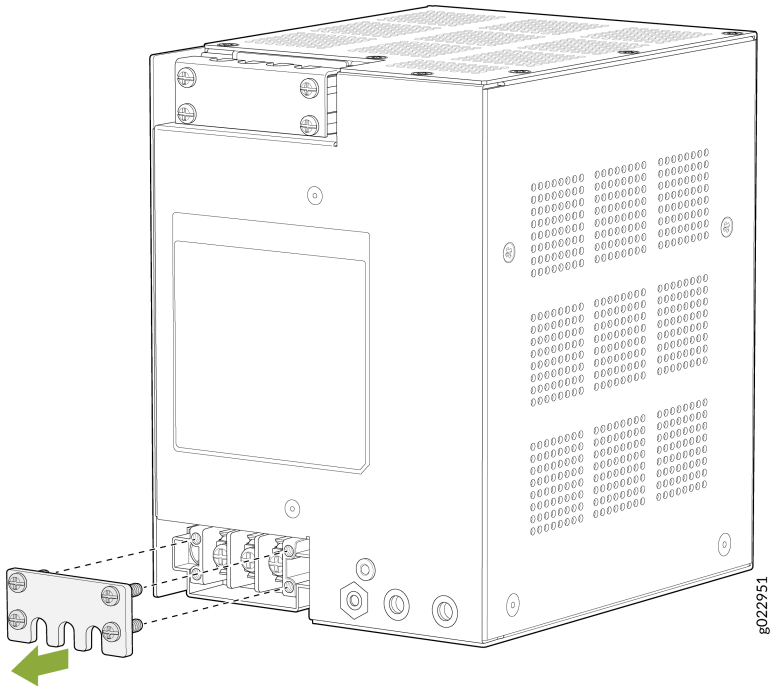

2. Insert the power cord wires of the power source into the power terminal inputs of the PSU. On an AC PSU input, the power terminals are marked as L, N, PE (grounding symbol). On a DC PSU input, the power terminals are marked as +, -, and PE (grounding symbol). Always insert the grounding wire or protective earth (PE) power cord wire into the PE input power terminal first. For an AC PSU, insert the line, single phase (L) power cord wire and neutral (N) power cord wire into the L and N input power terminals respectively. For a DC PSU, insert + power cord wire and - power cord wire into the + and - input power terminals respectively.

NOTE: Use Phillips #2 screwdriver with torque 6 lb.in

Figure 63: Insert the power cord wires into the power terminal inputs

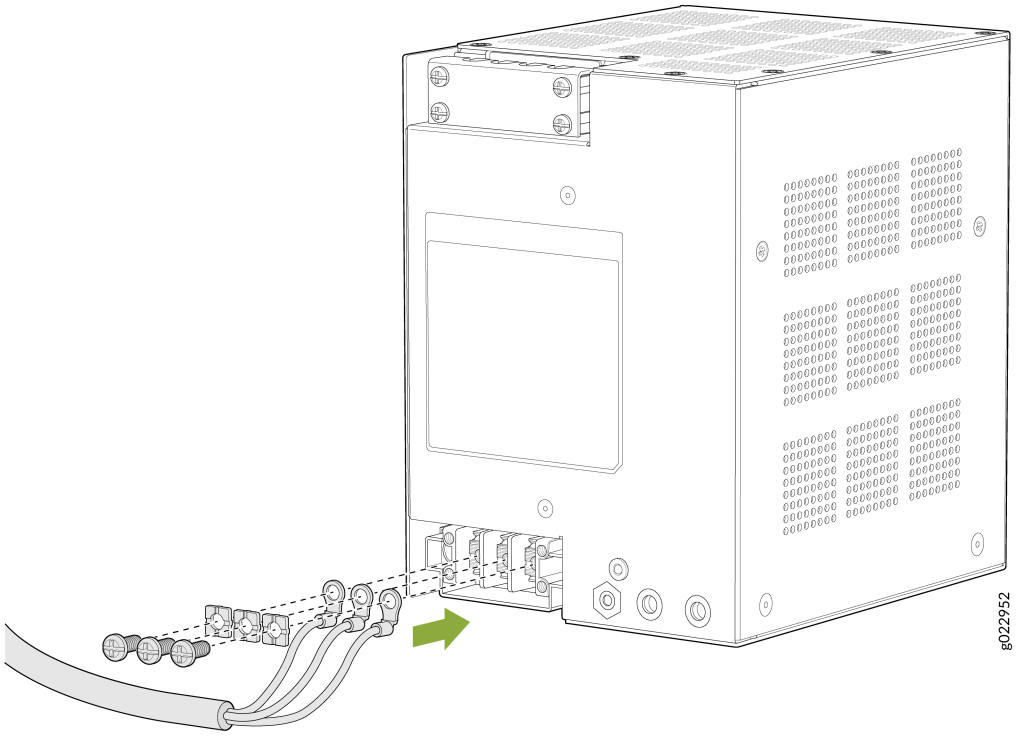

3. Secure the protective terminal cover with the screws over the PSU input power terminal.

Figure 64: Secure the protective terminal cover over the input power terminal

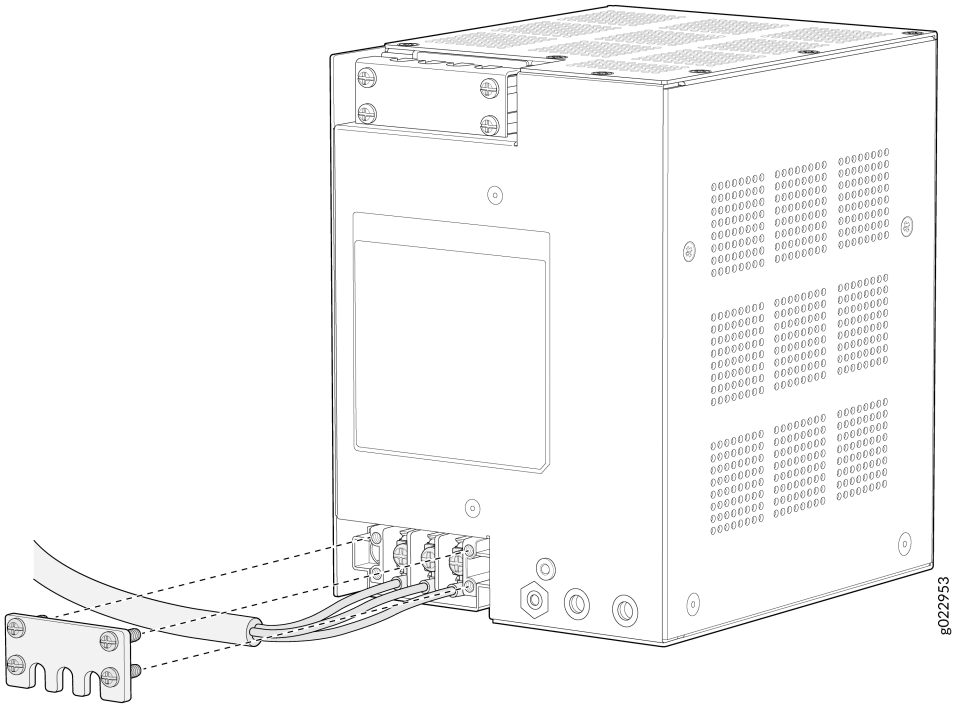

4. Remove or loosen the protective terminal cover of the PSU output power terminal. It is not required to remove the protective terminal cover; you can loosen the protective terminal cover until you can see the PSU output power terminals.

Figure 65: Remove or loosen the protective terminal cover of the PSU output power terminal

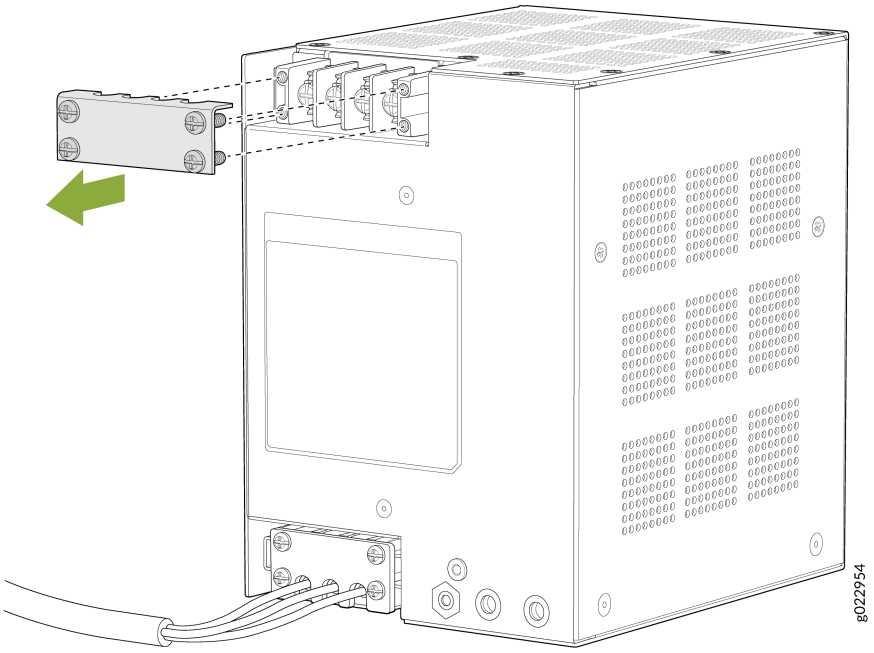

5. From the PSU output terminal you connect the PSU to the EX4100-H-12MP switch using the interconnecting wire. Secure the y-shaped connection points of the interconnecting wire onto the PSU output power terminal. If required modify the strength of the physical connection by tightening or loosening the screws on the PSU output power terminal. See Figure 66 on page 130.

   NOTE: Use Phillips #2 screwdriver with torque 6 lb.in

   The PSU output terminal has two voltages - 54V and 12V. Connect the Y-shared connection points of the interconnecting wire in this manner:

   - **54v +** - connect red y-shaped connection point of the interconnecting wire.
   - **54v -** - connect black y-shaped connection point of the interconnecting wire.
   - **12v+** - connect brown y-shaped connection point of the interconnecting wire.
   - **12v-** - connect gray y-shaped connection point of the interconnecting wire.

6. Connect the other ends of the interconnecting wire to the PSU connector on the switch. Assuming you are using only one PSU, connect the other ends of the interconnecting wire to the connector for PSU 0 or the connector for PSU 1, but not to both. A PSU connector is used for connecting only one PSU to the switch.Two PSU connectors are used for connecting two PSUs to the switch. Note that

you can connect up to two PSUs to the switch - two AC PSUs, two DC PSUs, one AC and one DC PSU, only one AC PSU, or only one DC PSU. See Figure 66 on page 130.

7. You connect the other ends of the interconnecting wire to the PSU connector by initially partially loosening the screws on the sides of the PSU connector using slotted/flat head 2.5mm screwdriver with torque 1.77 lb.in.. Then insert the other ends of the interconnecting wire into the PSU connector slots before fastening the screws of the sides of the PSU connector to secure the interconnecting wire to the PSU connector and complete the PSU to switch connection. See Figure 66 on page 130.



NOTE: To remove or install the PSU connector you use slotted/flat head 3.5mm screwdriver with torque 2.65 lb.in.

The other ends of the interconnecting wire to the PSU connector has to be connected in this manner:

Assuming you are using only one PSU:

- Connect the interconnecting wire connected to the 54v+ PSU output terminal to the 54v+ PSU connector input of PSU 0 or PSU 1.
- Connect the interconnecting wire connected to the 54v- PSU output terminal to the 54v- PSU connector input of PSU 0 or PSU 1.
- Connect the interconnecting wire connected to the 12v+ PSU output terminal to the 12v+ PSU connector input of PSU 0 or PSU 1.
- Connect the interconnecting wire connected to the 12v- PSU output terminal to the 12v- PSU connector input of PSU 0 or PSU 1.

Figure 66: Connect Switch to the PSU Using the Interconnecting Wire

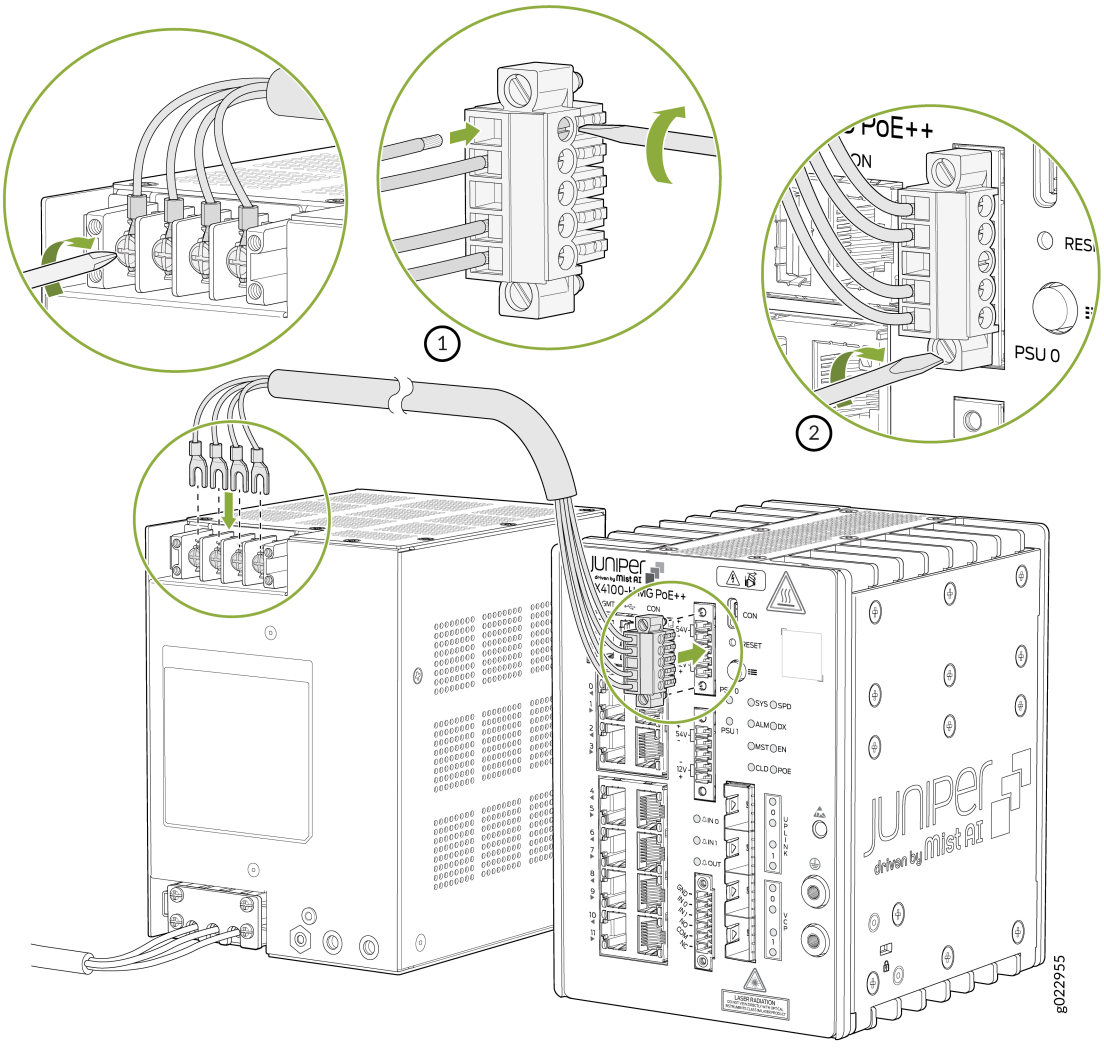

8. Secure the protective terminal cover with the screws over the PSU output power terminal.

Figure 67: Secure the protective terminal cover with the screws over the output power terminal of the PSU

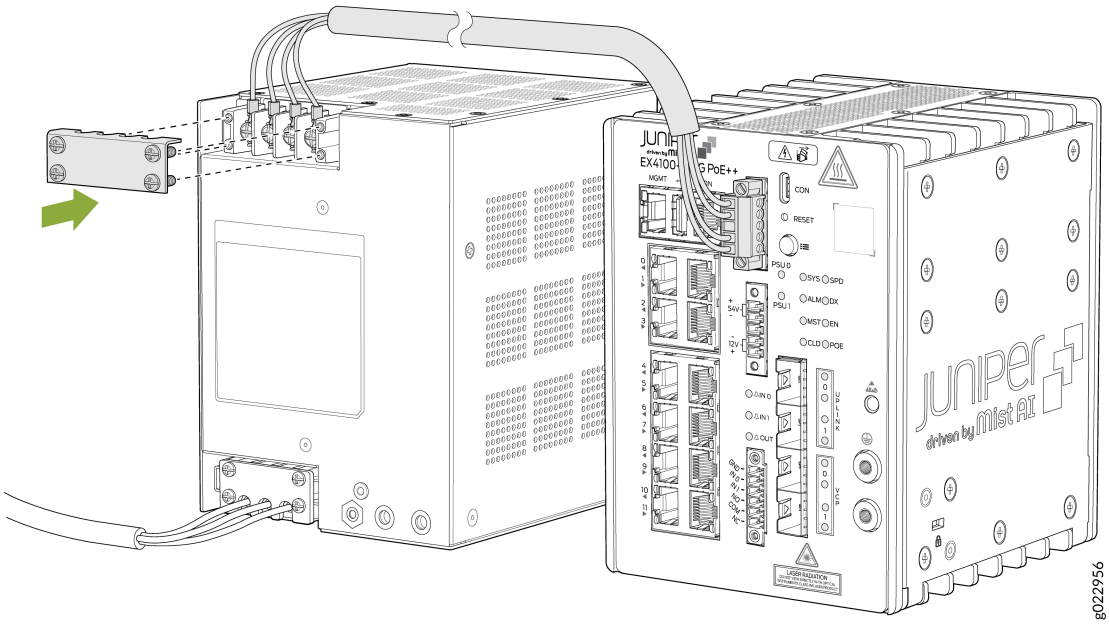

Connect the EX4100-H Switch to External Devices

IN THIS SECTION

- Connect a Device to a Network for Out-of-Band Management | **131**
- Connect a Device to a Management Console Using an RJ-45 Connector | **132**
- Connect an EX4100-H Switch to a Management Console Using the USB Type-C Console Port | **134**

Connect a Device to a Network for Out-of-Band Management

Ensure that you have an Ethernet cable that has an RJ-45 connector at either end.

Figure 68: RJ-45 Connector on an Ethernet Cable

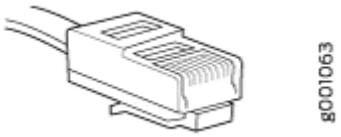

You can monitor and manage a network device, such as a router or a switch, by using a dedicated management channel. Each device has a management port to which you can connect an Ethernet cable with an RJ-45 connector. Use the management port to connect the device to the management device.

To connect a device to a network for out-of-band management:

1. Connect one end of the Ethernet cable to the management port on the device.
2. Connect the other end of the Ethernet cable to the management device.

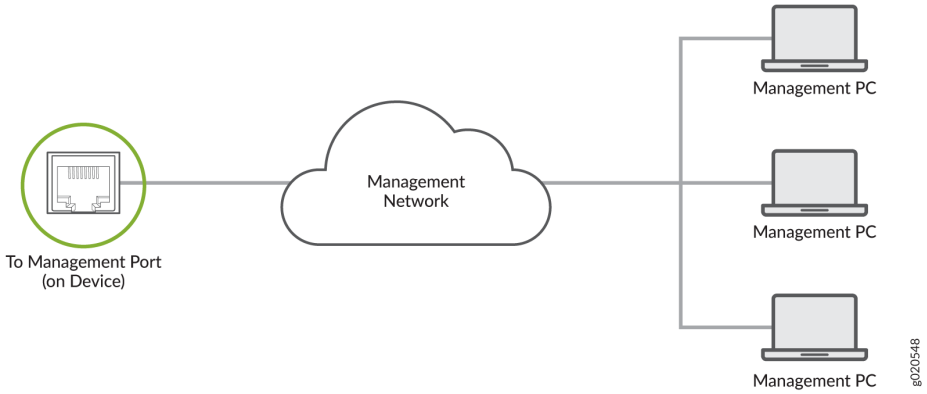

Connect a Device to a Management Console Using an RJ-45 Connector

Ensure that you have an Ethernet cable that has an RJ-45 connector at either end and an RJ-45-to-DB-9 serial port adapter.

Figure 69: RJ-45 Connector on an Ethernet Cable

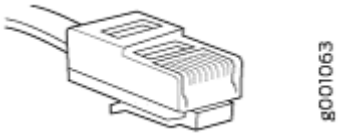

NOTE: We no longer include the RJ-45 console cable with the DB-9 adapter as part of the device package. If the console cable and adapter are not included in your device package, or if you need a different type of adapter, you can order the following separately:

- RJ-45 to DB-9 adapter (JNP-CBL-RJ45-DB9)
- RJ-45 to USB-A adapter (JNP-CBL-RJ45-USBA)
- RJ-45 to USB-C adapter (JNP-CBL-RJ45-USBC)

If you want to use RJ-45 to USB-A or RJ-45 to USB-C adapter, you must have X64 (64-Bit) Virtual COM port (VCP) driver installed on your PC. See https://ftdichip.com/drivers/vcp-drivers/ to download the driver.

NOTE: If your laptop or desktop PC does not have a DB-9 plug connector pin and you want to connect your laptop or desktop PC directly to the device, use a combination of the RJ-45-to-DB-9 socket adapter and a USB-to-DB-9 plug adapter. You must provide the USB-to-DB-9 plug adapter.

You can configure and manage your network devices using a dedicated management channel. Each device has a console port that you can connect to using an Ethernet cable with an RJ-45 connector. Use the console port to connect the device to the console server or management console. The console port accepts a cable that has an RJ-45 connector.

To connect the device to a management console:

1. Connect one end of the Ethernet cable to the console port (labeled **CON**, **CONSOLE**, or **CON1**) on the device.
2. Connect the other end of the Ethernet cable to the console server (see Figure 70 on page 133) or management console (see Figure 71 on page 134).

Figure 70: Connect a Device to a Management Console Through a Console Server

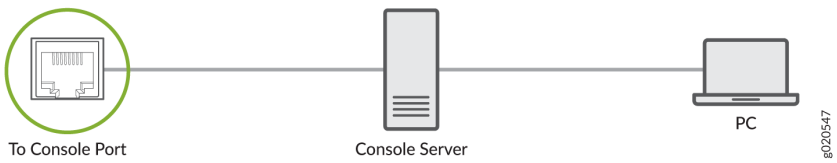

Figure 71: Connect a Device Directly to a Management Console



Connect an EX4100-H Switch to a Management Console Using the USB Type-C Console Port

Before You Begin

Before you connect the switch using the USB Type-C console port:

- Ensure that the USB to serial driver is installed on the host machine.
- Ensure that the HyperTerminal properties of the console server or laptop are set as follows:
  - Baud rate—9600
  - Flow control—None
  - Data—8
  - Parity—None
  - Stop bits—1
  - DCD state—Disregard

You will need:

- One USB cable with USB Type-C connectors at both ends (not provided).
- (If your laptop or desktop PC does not have a USB Type-C port) One USB Type-A to USB Type-C converter cable (not provided).

EX4100-H switches have two console ports:

- An RJ-45 console port on the rear panel that accepts a cable with an RJ-45 connector
- A USB Type-C console port on the front panel that accepts a USB cable with a USB Type-C connector

You can log in to the switch and configure and manage the switch by using either of the console ports. The RJ-45 console port is enabled by default. However, you must configure the USB Type-C console port before you can use it to connect to the switch.

In this topic, you learn how to connect EX4100-H switches to the management console using the USB Type-C console port.

To connect the switch to the console using the USB Type-C console port:

1. Connect the host machine to the device directly. You can use the active console port or use the management interface to connect remotely.
2. Connect one end of the USB cable to the USB Type-C or Type-A port your PC or laptop.
3. Connect the other end of the USB cable to the USB Type-C console port on the front panel switch.
4. Use the `set system ports auxiliary` configuration command to enable login (to the switch) using the USB Type-C console port.
5. Use the `request system boot-console auxiliary` command to see the boot logs on the console connected to the USB Type-C port.
6. Reboot the switch. The boot logs and the login prompt appear on the console connected to the USB Type-C port.

Connect the EX4100-H Switch to the Network

IN THIS SECTION

- Install a Transceiver | **135**
- Connect a Fiber-Optic Cable | **138**

Install a Transceiver

Before you install a transceiver in a device, ensure that you have taken the necessary precautions for safe handling of lasers (see Laser and LED Safety Guidelines and Warnings).

Ensure that you have a rubber safety cap available to cover the transceiver.

The transceivers for Juniper Networks devices are hot-removable and hot-insertable field-replaceable units (FRUs). You can remove and replace the transceivers without powering off the device or disrupting the device functions.

NOTE: After you insert a transceiver or after you change the media-type configuration, wait for 6 seconds for the interface to display operational commands.

NOTE: We recommend that you use only optical transceivers and optical connectors purchased from Juniper Networks with your Juniper Networks device.

CAUTION: The Juniper Networks Technical Assistance Center (JTAC) provides complete support for Juniper-supplied optical modules and cables. However, JTAC does not provide support for third-party optical modules and cables that are not qualified or supplied by Juniper Networks. If you face a problem running a Juniper device that uses third-party optical modules or cables, JTAC may help you diagnose host-related issues if the observed issue is not, in the opinion of JTAC, related to the use of the third-party optical modules or cables. Your JTAC engineer will likely request that you check the third-party optical module or cable and, if required, replace it with an equivalent Juniper-qualified component.

Use of third-party optical modules with high-power consumption (for example, coherent ZR or ZR+) can potentially cause thermal damage to or reduce the lifespan of the host equipment. Any damage to the host equipment due to the use of third-party optical modules or cables is the users' responsibility. Juniper Networks will accept no liability for any damage caused due to such use.

Figure 72 on page 138 shows how to install a QSFP+ transceiver. The procedure is the same for all types of transceivers except the QSFP28 and CFP transceivers.

To install a transceiver:

CAUTION: To prevent electrostatic discharge (ESD) damage to the transceiver, do not touch the connector pins at the end of the transceiver.

1. Wrap and fasten one end of the ESD wrist strap around your bare wrist, and connect the other end of the strap to a site ESD point or to the ESD point on the device.
2. Remove the transceiver from its bag.
3. Check to see whether the transceiver is covered with a rubber safety cap. If it is not, cover the transceiver with a rubber safety cap.

LASER WARNING: Do not leave a fiber-optic transceiver uncovered except when inserting or removing a cable. The rubber safety cap keeps the port clean and protects your eyes from accidental exposure to laser light.

4. If the port in which you want to install the transceiver is covered with a dust cover, remove the dust cover and save it in case you need to cover the port later. If you are hot-swapping a transceiver, wait for at least 10 seconds after removing the transceiver from the port before installing a new transceiver.
5. Using both hands, carefully place the transceiver in the empty port. The connectors must face the chassis.

CAUTION: Before you slide the transceiver into the port, ensure that the transceiver is aligned correctly. Misalignment might cause the pins to bend, making the transceiver unusable.

6. Slide the transceiver in gently until it is fully seated. If you are installing a CFP transceiver, use your fingers to tighten the captive screws on the transceiver.
7. Remove the rubber safety cap from the transceiver and the end of the cable, and insert the cable into the transceiver.

LASER WARNING: Do not look directly into a fiber-optic transceiver or into the ends of fiber-optic cables. Fiber-optic transceivers and fiber-optic cable connected to a transceiver emit laser light that can damage your eyes.

CAUTION: Do not leave a fiber-optic transceiver uncovered except when inserting or removing cable. The safety cap keeps the port clean and protects your eyes from accidental exposure to laser light.

8. If there is a cable management system, arrange the cable in the cable management system to prevent the cable from dislodging or developing stress points. Secure the cable so that it does not support its own weight as it hangs toward the floor. Place excess cable out of the way in a neatly coiled loop in the cable management system. Placing fasteners on the loop helps to maintain its shape.

CAUTION: Do not let fiber-optic cable hang free from the connector. Do not allow fastened loops of cable to dangle, which stresses the cable at the fastening point.

CAUTION: Avoid bending the fiber-optic cable beyond its minimum bend radius. An arc smaller than a few inches in diameter can damage the cable and cause problems that are difficult to diagnose.

NOTE: When you install SFP-DD transceivers, push it hard until you hear a click sound. Use a long nose plier to pull the SFP-DD transceiver connected on the top and bottom rows of the chassis where the pull tabs face each other.

NOTE: Make sure to use a dust cap to cover ports that are unused.

NOTE: While using Finisar AOC SFP+ optical module with the QFX5130-48C switch, you may need to pull the module upwards to pull out the module smoothly from the cage.

Figure 72: Install a Transceiver

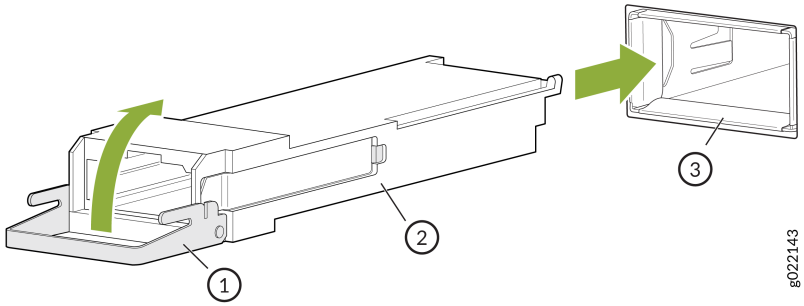

1– Ejector lever	3– Port
2– Transceiver	

Connect a Fiber-Optic Cable

Before you connect a fiber-optic cable to an optical transceiver installed in a device, ensure that you have taken the necessary precautions for safe handling of lasers (see Laser and LED Safety Guidelines and Warnings).

To connect a fiber-optic cable to an optical transceiver installed in a device:

LASER WARNING: Do not look directly into a fiber-optic transceiver or into the ends of fiber-optic cables. Fiber-optic transceivers and fiber-optic cables connected to transceivers emit laser light that can damage your eyes.

1. If the fiber-optic cable connector is covered with a rubber safety cap, remove the cap. Save the cap.
2. Remove the rubber safety cap from the optical transceiver. Save the cap.
3. Insert the cable connector into the optical transceiver.

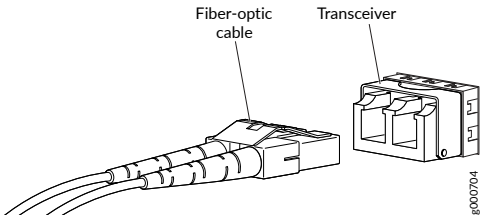

4. Secure the cables so that they do not support their own weight. Place excess cable out of the way in a neatly coiled loop. Placing fasteners on a loop helps cables maintain their shape.

CAUTION: Do not bend fiber-optic cables beyond their minimum bend radius. An arc smaller than a few inches in diameter can damage the cables and cause problems that are difficult to diagnose.

Do not let fiber-optic cables hang free from the connector. Do not allow fastened loops of cables to dangle, which stresses the cables at the fastening point.

Configure Junos OS on an EX4100-H Switch

IN THIS SECTION

- EX4100-H Default Configuration | **140**
- Connect and Configure an EX4100-H Switch | **145**
- Revert to the Default Factory Configuration on an EX Series Switch | **150**

EX4100-H Default Configuration

Each EX Series switch is programmed with a factory default configuration that contains the values set for each configuration parameter when the switch is shipped. The default configuration file sets values for system parameters such as `syslog` and `commit`, configures Ethernet switching on all interfaces, enables IGMP snooping, and enables the LLDP and RSTP protocols.

NOTE:

- The factory default configuration file has more interfaces for models that have more ports.
- The `poe` statement does not appear for models without PoE+ ports.

When you commit changes to the configuration, a new configuration file is created. This file becomes the active configuration. You can always revert to the factory-default configuration. See "Revert to the Default Factory Configuration on an EX Series Switch" on page 150.

The following is the factory-default configuration file for an EX4100-H-12MP switch:

```
system {
    auto-snapshot;
    phone-home {
        server https://redirect.juniper.net;
        rfc-compliant;
    }
    services {
        ssh;
        netconf {
            ssh;
            rfc-compliant;
            yang-compliant;
        }
    }
}

protocols {
    lldp {
        interface all;
    }
    lldp-med {
```

```
        interface all;
    }
    igmp-snooping {
        vlan default;
    }
    rstp {
        interface all;
    }
}

forwarding-options {
    storm-control-profiles default {
        all;
    }
}

poe {
    interface all;
}

interfaces {
## For phone-home connectivity to PHS enable dhcp on vme and irb.
    vme {
        unit 0 {
            family inet {
                dhcp;
            }
        }
    }
    irb {
        unit 0 {
            family inet {
                dhcp;
            }
        }
    }
    mge-0/0/0 {
        unit 0 {
            family ethernet-switching {
                storm-control default;
            }
        }
    }
```

```
    mge-0/0/1 {
        unit 0 {
            family ethernet-switching {
                storm-control default;
            }
        }
    }
    mge-0/0/2 {
        unit 0 {
            family ethernet-switching {
                storm-control default;
            }
        }
    }
    mge-0/0/3 {
        unit 0 {
            family ethernet-switching {
                storm-control default;
            }
        }
    }
    ge-0/0/4 {
        unit 0 {
            family ethernet-switching {
                storm-control default;
            }
        }
    }
    ge-0/0/5 {
        unit 0 {
            family ethernet-switching {
                storm-control default;
            }
        }
    }
    ge-0/0/6 {
        unit 0 {
            family ethernet-switching {
                storm-control default;
            }
        }
    }
    ge-0/0/7 {
```

```
        unit 0 {
            family ethernet-switching {
                storm-control default;
            }
        }
    }
    ge-0/0/8 {
        unit 0 {
            family ethernet-switching {
                storm-control default;
            }
        }
    }
    ge-0/0/9 {
        unit 0 {
            family ethernet-switching {
                storm-control default;
            }
        }
    }
    ge-0/0/10 {
        unit 0 {
            family ethernet-switching {
                storm-control default;
            }
        }
    }
    ge-0/0/11 {
        unit 0 {
            family ethernet-switching {
                storm-control default;
            }
        }
    }
    xe-0/2/0 {
        unit 0 {
            family ethernet-switching {
                storm-control default;
            }
        }
    }
    xe-0/2/1 {
        unit 0 {
```

```
            family ethernet-switching {
                storm-control default;
            }
        }
    }
    ge-0/2/0 {
        unit 0 {
            family ethernet-switching {
                storm-control default;
            }
        }
    }
    ge-0/2/1 {
        unit 0 {
            family ethernet-switching {
                storm-control default;
            }
        }
    }
}

groups {
    junos-defaults {
        protocols {
            igmp {
                interface me0.0 {
                    disable;
                }
                interface vme.0 {
                    disable;
                }
            }
        }
    }
}

system {
    commit {
        factory-settings {
            reset-chassis-lcd-menu;
            reset-virtual-chassis-configuration;
        }
    }
```

```
}

chassis {
    redundancy {
        graceful-switchover;
    }
}

vlans {
    default {
        vlan-id 1;
        l3-interface irb.0;
    }
}
```

Connect and Configure an EX4100-H Switch

Before you connect and configure an EX4100-H switch, set the following parameter values on the console server or PC:

- Baud Rate—9600
- Data—8
- Flow Control—None
- Parity—None
- Stop Bits—1
- DCD State—Disregard

Ensure that you have the following parts and tools available:

- An Ethernet cable with an RJ-45 connector attached (provided)
- An RJ-45 to DB-9 serial port adapter (provided)
- A laptop or PC, with a serial port (not provided)

Have the following information available before you configure custom settings for the switch:

- Root password

- IP address of the default gateway
- IP address of the management port
- IP address of a DNS server
- (Optional) Hostname
- (Optional) IP address of a backup router
- (Optional) SNMP read community, location, and contact to configure SNMP parameters
- (Optional) Static routes to remote subnets with access to the management port
- (Optional) Static routes to remote prefixes with access to the management port

An EX4100-H switch is shipped with Junos OS preinstalled and ready to be configured when the switch is powered on. You must perform the initial configuration of the switch through the console port (labeled **CON**) using the CLI. The console port is located on the front panel of an EX4100-H-12MP switch.

This procedure describes how to perform the initial configuration on the switch and connect it to the network. For complete information about enabling the switch to forward traffic, including examples, see the Junos OS configuration guides.

To perform the initial configuration on the switch and connect it to the network:

1. Power the switch on.
2. Connect the console port (labeled **CON**) of the switch to a management host such as a laptop or PC by using an RJ-45-to-DB-9 serial port adapter.
3. At the Junos OS login prompt, type **root** to log in. You don't need to enter a password. If the software booted before you connected the console port, you might need to press the Enter key for the prompt to appear.

```
login: root
```

4. Start the CLI.

```
root@:RE:0% cli
root>
```

5. Enter configuration mode.

```
root> configure
[edit]
root#
```

6. Add a password to the root administration user account. Enter a clear-text password, an encrypted password, or an SSH public key string.

```
[edit]
root# set system root-authentication plain-text-password
New password: password
Retype new password: password
```

or

```
[edit]
root# set system root-authentication encrypted-password encrypted-password
```

or

```
[edit]
root# set system root-authentication ssh-ecdsa public-key
```

or

```
[edit]
root# set system root-authentication ssh-ed25519 public-key
```

or

```
[edit]
root# set system root-authentication ssh-rsa public-key
```

7. (Optional) Configure the hostname of the switch. If the name includes spaces, enclose the name in double quotation marks (“ ”).

```
[edit]
root# set system host-name host-name
```

8. (Optional) Create a user account.

```
[edit]
root# set system login user user-name authentication plain-text-password
New password: password
Retype new password: password
```

9. (Optional) Set the user account class to super-user.

```
[edit]
root# set system login user user-name class super-user
```

10. (Optional) Configure the domain name of the switch.

```
[edit]
root# set system domain-name domain-name
```

11. Configure the default gateway.

```
[edit]
root# set routing-options static route 0/0 next-hop address
```

12. Configure the IP address and prefix length for the management interface on the switch.

```
[edit]
root# set interfaces vme unit 0 family inet address  address/prefix-length
```



NOTE: The management port `vme` (labeled **MGMT**) is located on the front panel of the switch.

13. (Optional) Configure the IP address of a backup router, which is used only while the routing protocol is not running.

```
[edit]
root# set system backup-router address
```

14. Configure the IP address of a DNS server.

```
[edit]
root# set system name-server address
```

15. (Optional) Configure the static routes to remote subnets with access to the management port. Access to the management port is limited to the local subnet.

```
[edit]
root# set routing-options static route remote-subnet next-hop destination-IP retain no-
readvertise
```

16. (Optional) Configure the static routes to remote prefixes with access to the management port.

```
[edit]
root# set routing-options static route remote-prefix next-hop destination-IP retain no-
readvertise
```

17. Configure the SSH service.

```
[edit]
root# set system services ssh root-login allow
```

18. Configure in-band management or out-of-band management:

- With in-band management, you can configure a network port interface as the management interface and connect it to the management device. In this scenario, you can do either of the following:
  - Use the automatically created VLAN named *default* for management of all data interfaces as members of the default VLAN. Specify the management IP address and the default gateway.
  - Create a new management VLAN. Specify the VLAN name, VLAN ID, management IP address, and default gateway. Select the ports that must be part of this VLAN.

- With out-of-band management, you use a dedicated management channel (**MGMT**, **C0**, or **C1** port) to connect to the management device. Specify the IP address and gateway of the management interface. Use this IP address to connect to the switch.

19. (Optional) Specify the SNMP read community, location, and contact to configure SNMP parameters.
20. (Optional) Specify the system date and time. Select the time zone from the list. The configured parameters are displayed.
21. Enter **yes** to commit the configuration. The configuration is committed as the active configuration for the switch.
22. (Optional) Configure additional properties by adding the necessary configuration statements.
23. Commit the configuration to activate it on the switch.

```
[edit]
root# commit
```

24. When you have finished configuring the switch, exit configuration mode.

```
[edit]
root@switch# exit
root@switch>
```

You can now log in by using the CLI and continue configuring the switch.

Revert to the Default Factory Configuration on an EX Series Switch

IN THIS SECTION

- Revert to the EX Series Switch Factory-Default Configuration Using the `request system zeroize` Command | **151**
- Revert to the EX Series Switch Factory-Default Configuration Using the `load factory-default` Command | **152**
- Revert to the Factory-Default Configuration Using the Factory Reset/Port Mode button | **153**
- Rebooting/restarting the device using the Reset Pin-hole Button | **154**

With EX Series switches, if for any reason the current active configuration fails, you can revert to the factory-default configuration.

You can also roll back to a previous configuration, as described in Rolling Back Junos OS Configuration Changes, or revert to the rescue configuration, as described in Reverting to the Rescue Configuration for the EX Series Switch.



TIP: If you have lost the root password, it is not necessary to revert to the factory-default configuration to reset it. See Recovering the Root Password on Switches.

The factory-default configuration contains the basic configuration settings for the switch. This is the first configuration of the switch and is loaded when the switch is first powered on. For the factory-default configuration file for your switch, see the hardware documentation for your switch.



TIP: On fixed-configuration switches, you can run the EZsetup script to complete the initial configuration *after* reverting to the factory-default configuration. (The EZsetup script is not available on modular switches. To configure modular switches, use the CLI or the J-Web interface.) For information about completing the initial configuration using either the CLI or the J-Web interface, see Connecting and Configuring an EX Series Switch (CLI Procedure) and Connecting and Configuring an EX Series Switch (J-Web Procedure).

You can revert to the factory-default configuration by using the `request system zeroize` operational command or the `load factory-default` configuration command to revert to the factory-default configuration file that contains all default settings *except* the root password setting, which is retained.

These procedures are described in the following sections:



NOTE: After resetting the factory default configuration either through the CLI or Factory Reset/Port mode button, the previous host name of the device is not reset. The host name can only be changed by configuring a new hostname or rebooting the device.

Revert to the EX Series Switch Factory-Default Configuration Using the `request system zeroize` Command

The `request system zeroize` command is a standard Junos OS operational mode command that removes all configuration information and resets all key values. The operation unlinks all user-created data files, including customized configuration and log files, from their directories. The switch then reboots and reverts to the factory-default configuration.

To completely erase user-created data so that it is unrecoverable, use the `request system zeroize media` command.

CAUTION: Before issuing `request system zeroize`, use the `request system snapshot` command to back up the files currently used to run the switch to a secondary device. Using the zeroize command will destroy Junos and OAM partitions, and the switch may not boot. To recover from a failed software installation, see Recovering from a Failed Software Installation.

To revert to the factory-default configuration by using the `request system zeroize` command:

1.
```
user@switch>request system zeroize warning: System will be rebooted and may not boot without
configuration
Erase all data, including configuration and log files?. In case of Dual RE system, both
Routing Engines will be zeroized [yes,no] (no)
```

2. Type `yes` to remove configuration and log files and revert to the factory-default configuration.

NOTE: The `auto-image-upgrade` statement is added under the `[edit chassis]` hierarchy level when you use this procedure. The automatic image upgrade feature is then available on the switch.

Revert to the EX Series Switch Factory-Default Configuration Using the `load factory-default` Command

The `load factory-default` command is a standard Junos OS configuration command that replaces the current active configuration with the factory-default configuration except the root password setting. By default, the root password is not set; you must set it to commit the new configuration in this procedure.

If you want to run the EZsetup script to complete the initial configuration of the switch after you revert to the factory-default configuration, do not use the `load factory-default` command. Instead, revert using the `request system zeroize` command. If you use the `load factory-default` command to revert to the factory-default configuration, the configuration for the root password is retained and the EZsetup script will not run. (The EZsetup script is available only on fixed configuration switches, it is not available on modular switches.)

NOTE: The `load factory-default` command by itself is not supported on EX3300, EX4200, EX4500, and EX4550 switches configured in a Virtual Chassis.

To revert to the factory-default configuration by using the `load factory-default` command:



NOTE: If you use this procedure, you must delete the system commit factory settings, set the root password, and commit the configuration. These steps are not required when you revert to the factory-default configuration by using `request system zeroize`. Also, the `auto-image-upgrade` statement is not added to the configuration when you use this procedure; it *is* added to the configuration when you use `request system zeroize`.

1. [edit] user@switch# `load factory-default`
2. [edit] user@switch# `delete system commit factory-settings`
3. [edit] user@switch# `set system root-authentication plain-text-password`
4. [edit] user@switch# `commit`
5. Check the member ID and primary-role priority with the `show virtual-chassis` command and check to see whether there are remaining settings for VCPs by using the `show virtual-chassis vc-port` command.
6. Check for remaining settings for VCPs by using the `show virtual-chassis vc-port` command.

Revert to the Factory-Default Configuration Using the Factory Reset/Port Mode button

To set the switches to the factory-default configuration, use the Factory Reset/Mode button located on the far right side of the front panel.



NOTE: To revert a member switch of a Virtual Chassis to the factory-default configuration, disconnect the cables connected to the Virtual Chassis ports (VCPs). You disconnect the cables to prevent any effect on Virtual Chassis configuration parameters (such as member ID, primary-role priority, and setting of VCP uplinks) on other members.

To revert to the factory-default configuration by using the Factory Reset/Mode button:

1. Press the Factory Reset/Mode button for 10 seconds. The switch transitions into factory-default configuration, the console displays **committing factory default configuration**, and the Link/Activity LED on the RJ-45 network ports and the uplink ports is lit steadily green.
2. Press the Factory Reset/Mode button for 10 more seconds. The switch transitions into initial setup mode, the console displays **committing ezsetup config**, and the Link/Activity LED on the RJ-45 network ports and the uplink ports blink green.

   Note that you can also press the Factory Reset/Mode button continuously for 10 seconds + 10 seconds, totalling over 20 seconds to commit factory default configuration as well as commit ezsetup config.

The Factory Reset/Mode button is enabled by default. You can disable the button using the CLI.

To disable the Factory Reset/Mode button, run the following commands:

1. [edit]
   user@switch# `set chassis config-button no-clear`
2. [edit]
   user@switch# `commit`

To enable the Factory Reset/Mode button, run the following commands:

1. [edit]
   user@switch# `delete chassis config-button no-clear`
2. [edit]
   user@switch# `commit`

Rebooting/restarting the device using the Reset Pin-hole Button

You can use the Reset button (pin-hole) on the front panel to reboot/restart the device.

1. Insert and press a pointed object such as a pin into the pin-hole and then release it.
2. The device reboots/restarts.



NOTE: On the EX4100-H-12MP switch, the Cloud LED (CLD) and the activity LED of the management port (MGMT) continue to glow during the reboot.

RELATED DOCUMENTATION

- Connecting and Configuring an EX Series Switch (CLI Procedure)
- Understanding Configuration Files

5

CHAPTER

Maintain Components

IN THIS CHAPTER

- Maintain Transceivers | **156**
- Maintain Fiber-Optic Cables | **161**
- Install or Remove Power Supplies | **164**

Maintain Transceivers

IN THIS SECTION

- Remove a Transceiver | 156
- Install a Transceiver | 158

Remove a Transceiver

Before you remove a transceiver from a device, ensure that you have taken the necessary precautions for the safe handling of lasers (see Laser and LED Safety Guidelines and Warnings).

Ensure that you have the following parts and tools available:

- An antistatic bag or an antistatic mat
- Rubber safety caps to cover the transceiver and fiber-optic cable connector
- A dust cover to cover the port or a replacement transceiver

The transceivers for Juniper Networks devices are hot-removable and hot-insertable field-replaceable units (FRUs). You can remove and replace the transceivers without powering off the device or disrupting device functions.

NOTE: After you remove a transceiver, or when you change the media-type configuration, wait for 6 seconds for the interface to display the operational commands.

Figure 73 on page 158 shows how to remove a quad small form-factor pluggable plus (QSFP+) transceiver. The procedure is the same for all types of transceivers except the QSFP28 and C form-factor pluggable (CFP) transceivers.

To remove a transceiver from a device:

1. Place the antistatic bag or antistatic mat on a flat, stable surface.
2. Wrap and fasten one end of the ESD wrist strap around your bare wrist, and connect the other end of the strap to the ESD point on the rack.

3. Label the cable connected to the transceiver so that you can reconnect it correctly.

   LASER WARNING: Do not look directly into a fiber-optic transceiver or into the ends of fiber-optic cables. Fiber-optic transceivers and fiber-optic cables connected to transceivers emit laser light that can damage your eyes.

   LASER WARNING: Do not leave a fiber-optic transceiver uncovered except when inserting or removing a cable. The rubber safety cap keeps the port clean and protects your eyes from accidental exposure to laser light.

   CAUTION: Do not bend fiber-optic cables beyond their minimum bend radius. An arc smaller than a few inches in diameter can damage the cables and cause problems that are difficult to diagnose.

4. Remove the cable connected to the transceiver (see Disconnect a Fiber-Optic Cable). Cover the transceiver and the end of each fiber-optic cable connector with a rubber safety cap immediately after disconnecting the fiber-optic cables.
5. If there is a cable management system, arrange the cable in the cable management system to prevent it from dislodging or developing stress points. Secure the cable so that it does not support its own weight as it hangs to the floor. Place excess cable out of the way in a neatly coiled loop in the cable management system. Placing fasteners on the loop helps to maintain its shape.
6. To remove an SFP56-DD, SFP, SFP+, XFP, a QSFP+, or QSFP56-DD transceiver:

   a. Using your fingers, pull open the ejector lever on the transceiver to unlock the transceiver.

      Note that QSFP-DD and SFP-DD transceivers don't have ejector levers, instead they have a pull tab which can be used to unlock and remove the transceiver.

      CAUTION: Before removing the transceiver, make sure that you open the ejector lever completely until you hear it click. This precaution prevents damage to the transceiver.

   b. Grasp the transceiver ejector lever and gently slide the transceiver approximately 0.5 in. (1.3 cm) straight out of the port.

      CAUTION: To prevent ESD damage to the transceiver, do not touch the connector pins at the end of the transceiver.

Figure 73: Remove a QSFP+ Transceiver

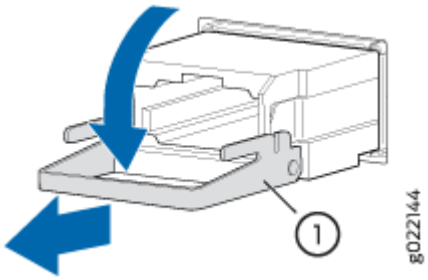

1– Ejector lever

To remove a CFP transceiver:

a. Using your fingers, loosen the screws on the transceiver.

b. Grasp the screws on the transceiver and gently slide the transceiver approximately 0.5 in. (1.3 cm) straight out of the port.

> **CAUTION**: To prevent ESD damage to the transceiver, do not touch the connector pins at the end of the transceiver.

7. Using your fingers, grasp the body of the transceiver and pull it straight out of the port.
8. Place the transceiver in the antistatic bag or on the antistatic mat placed on a flat, stable surface.
9. Place the dust cover over the empty port, or install the replacement transceiver.

Install a Transceiver

Before you install a transceiver in a device, ensure that you have taken the necessary precautions for safe handling of lasers (see Laser and LED Safety Guidelines and Warnings).

Ensure that you have a rubber safety cap available to cover the transceiver.

The transceivers for Juniper Networks devices are hot-removable and hot-insertable field-replaceable units (FRUs). You can remove and replace the transceivers without powering off the device or disrupting the device functions.

> **NOTE**: After you insert a transceiver or after you change the media-type configuration, wait for 6 seconds for the interface to display operational commands.

NOTE: We recommend that you use only optical transceivers and optical connectors purchased from Juniper Networks with your Juniper Networks device.

CAUTION: The Juniper Networks Technical Assistance Center (JTAC) provides complete support for Juniper-supplied optical modules and cables. However, JTAC does not provide support for third-party optical modules and cables that are not qualified or supplied by Juniper Networks. If you face a problem running a Juniper device that uses third-party optical modules or cables, JTAC may help you diagnose host-related issues if the observed issue is not, in the opinion of JTAC, related to the use of the third-party optical modules or cables. Your JTAC engineer will likely request that you check the third-party optical module or cable and, if required, replace it with an equivalent Juniper-qualified component.

Use of third-party optical modules with high-power consumption (for example, coherent ZR or ZR+) can potentially cause thermal damage to or reduce the lifespan of the host equipment. Any damage to the host equipment due to the use of third-party optical modules or cables is the users' responsibility. Juniper Networks will accept no liability for any damage caused due to such use.

Figure 74 on page 161 shows how to install a QSFP+ transceiver. The procedure is the same for all types of transceivers except the QSFP28 and CFP transceivers.

To install a transceiver:

CAUTION: To prevent electrostatic discharge (ESD) damage to the transceiver, do not touch the connector pins at the end of the transceiver.

1. Wrap and fasten one end of the ESD wrist strap around your bare wrist, and connect the other end of the strap to a site ESD point or to the ESD point on the device.
2. Remove the transceiver from its bag.
3. Check to see whether the transceiver is covered with a rubber safety cap. If it is not, cover the transceiver with a rubber safety cap.

   LASER WARNING: Do not leave a fiber-optic transceiver uncovered except when inserting or removing a cable. The rubber safety cap keeps the port clean and protects your eyes from accidental exposure to laser light.

4. If the port in which you want to install the transceiver is covered with a dust cover, remove the dust cover and save it in case you need to cover the port later. If you are hot-swapping a transceiver, wait

for at least 10 seconds after removing the transceiver from the port before installing a new transceiver.

5. Using both hands, carefully place the transceiver in the empty port. The connectors must face the chassis.

> **CAUTION**: Before you slide the transceiver into the port, ensure that the transceiver is aligned correctly. Misalignment might cause the pins to bend, making the transceiver unusable.

6. Slide the transceiver in gently until it is fully seated. If you are installing a CFP transceiver, use your fingers to tighten the captive screws on the transceiver.
7. Remove the rubber safety cap from the transceiver and the end of the cable, and insert the cable into the transceiver.

> **LASER WARNING**: Do not look directly into a fiber-optic transceiver or into the ends of fiber-optic cables. Fiber-optic transceivers and fiber-optic cable connected to a transceiver emit laser light that can damage your eyes.

> **CAUTION**: Do not leave a fiber-optic transceiver uncovered except when inserting or removing cable. The safety cap keeps the port clean and protects your eyes from accidental exposure to laser light.

8. If there is a cable management system, arrange the cable in the cable management system to prevent the cable from dislodging or developing stress points. Secure the cable so that it does not support its own weight as it hangs toward the floor. Place excess cable out of the way in a neatly coiled loop in the cable management system. Placing fasteners on the loop helps to maintain its shape.

> **CAUTION**: Do not let fiber-optic cable hang free from the connector. Do not allow fastened loops of cable to dangle, which stresses the cable at the fastening point.

> **CAUTION**: Avoid bending the fiber-optic cable beyond its minimum bend radius. An arc smaller than a few inches in diameter can damage the cable and cause problems that are difficult to diagnose.

NOTE: When you install SFP-DD transceivers, push it hard until you hear a click sound. Use a long nose plier to pull the SFP-DD transceiver connected on the top and bottom rows of the chassis where the pull tabs face each other.

NOTE: Make sure to use a dust cap to cover ports that are unused.

NOTE: While using Finisar AOC SFP+ optical module with the QFX5130-48C switch, you may need to pull the module upwards to pull out the module smoothly from the cage.

Figure 74: Install a Transceiver

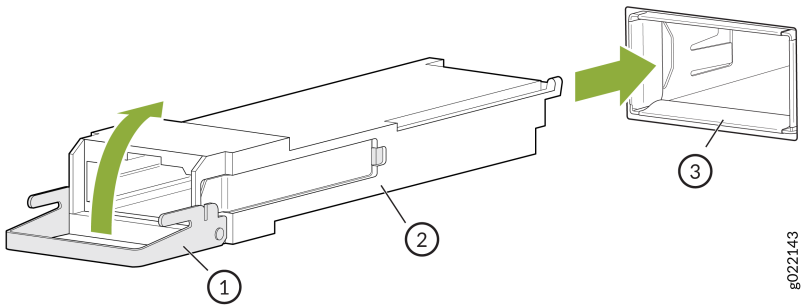

1– Ejector lever	3– Port
2– Transceiver	

Maintain Fiber-Optic Cables

IN THIS SECTION

- Connect a Fiber-Optic Cable | **162**
- Disconnect a Fiber-Optic Cable | **162**
- How to Handle Fiber-Optic Cables | **163**

Connect a Fiber-Optic Cable

Before you connect a fiber-optic cable to an optical transceiver installed in a device, ensure that you have taken the necessary precautions for safe handling of lasers (see Laser and LED Safety Guidelines and Warnings).

To connect a fiber-optic cable to an optical transceiver installed in a device:

LASER WARNING: Do not look directly into a fiber-optic transceiver or into the ends of fiber-optic cables. Fiber-optic transceivers and fiber-optic cables connected to transceivers emit laser light that can damage your eyes.

1. If the fiber-optic cable connector is covered with a rubber safety cap, remove the cap. Save the cap.
2. Remove the rubber safety cap from the optical transceiver. Save the cap.
3. Insert the cable connector into the optical transceiver.

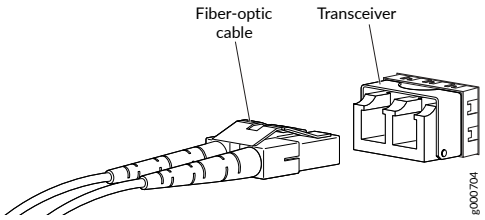

4. Secure the cables so that they do not support their own weight. Place excess cable out of the way in a neatly coiled loop. Placing fasteners on a loop helps cables maintain their shape.

CAUTION: Do not bend fiber-optic cables beyond their minimum bend radius. An arc smaller than a few inches in diameter can damage the cables and cause problems that are difficult to diagnose.

Do not let fiber-optic cables hang free from the connector. Do not allow fastened loops of cables to dangle, which stresses the cables at the fastening point.

Disconnect a Fiber-Optic Cable

Before you disconnect a fiber-optic cable from an optical transceiver, ensure that you have taken the necessary precautions for safe handling of lasers. See *Laser and LED Safety Guidelines and Warnings*.

Ensure that you have the following parts and tools available:

- A rubber safety cap to cover the transceiver
- A rubber safety cap to cover the fiber-optic cable connector

Juniper Networks devices have optical transceivers to which you can connect fiber-optic cables.

To disconnect a fiber-optic cable from an optical transceiver installed in the device:

1. Disable the port in which the transceiver is installed by issuing the following command:

```
[edit interfaces]
user@device# set interface-name disable
```



LASER WARNING: Do not look directly into a fiber-optic transceiver or into the ends of fiber-optic cables. Fiber-optic transceivers and fiber-optic cables connected to transceivers emit laser light that can damage your eyes.

2. Carefully unplug the fiber-optic cable connector from the transceiver.
3. Cover the transceiver with a rubber safety cap.



LASER WARNING: Do not leave a fiber-optic transceiver uncovered except when inserting or removing a cable. The rubber safety cap keeps the port clean and protects your eyes from accidental exposure to laser light.

4. Cover the fiber-optic cable connector with the rubber safety cap.

How to Handle Fiber-Optic Cables

Fiber-optic cables connect to optical transceivers that are installed in Juniper Networks devices.

Follow these guidelines when handling fiber-optic cables:

- When you unplug a fiber-optic cable from a transceiver, place rubber safety caps over the transceiver and on the end of the cable.
- Anchor fiber-optic cables to prevent stress on the connectors. When attaching a fiber-optic cable to a transceiver, be sure to secure the fiber-optic cable so that it does not support its own weight as it hangs to the floor. Never let a fiber-optic cable hang free from the connector.

- Avoid bending the fiber-optic cables beyond their minimum bend radius. Bending fiber-optic cables into arcs smaller than a few inches in diameter can damage the cables and cause problems that are difficult to diagnose.
- Frequent plugging and unplugging of fiber-optic cables in and out of optical instruments can damage the instruments, which are expensive to repair. To prevent damage from overuse, attach a short fiber extension to the optical equipment. The short fiber extension absorbs wear and tear due to frequent plugging and unplugging. Replacing the short fiber extension is easier and cost efficient compared with replacing the instruments.
- Keep fiber-optic cable connections clean. Microdeposits of oil and dust in the canal of the transceiver or cable connector can cause loss of light, reduction in signal power, and possibly intermittent problems with the optical connection.
  - To clean the transceiver canal, use an appropriate fiber-cleaning device such as RIFOCS Fiber Optic Adaptor Cleaning Wands (part number 946). Follow the instructions in the cleaning kit you use.
  - After cleaning the transceiver, make sure that the connector tip of the fiber-optic cable is clean. Use only an approved alcohol-free fiber-optic cable cleaning kit such as the Opptex Cletop-S®Fiber Cleaner. Follow the instructions in the cleaning kit you use.

Install or Remove Power Supplies

SUMMARY

IN THIS SECTION

- Install Power Supply Units in an EX4100-H-24MP or EX4100-H-24F Switch | **165**
- Remove Power Supply Units in an EX4100-H-24MP or EX4100-H-24F Switch | **165**

Install Power Supply Units in an EX4100-H-24MP or EX4100-H-24F Switch

You can install up to two PSUs in the switch in an AC, DC, AC + AC, DC + DC or AC + DC configuration.

Before you install power supply in the switch:

- Ensure that you understand how to prevent electrostatic discharge (ESD) damage. See Prevention of Electrostatic Discharge.
- Ensure that you have the following parts and tools available to install the power supply:
  - ESD grounding strap
  - Phillips (+) screwdriver, number 2

Each PSU in an EX4100-H switch is a hot-removable and hot-insertable field-replaceable unit (FRU) installed in the rear panel of the switch. You can remove and replace the power supply without powering off the switch or disrupting switch functions.



NOTE: You must connect each power supply to a dedicated power source outlet. The switch comes with one power supply preinstalled. Additional power supplies are separately orderable. You can install up to two power supplies in the switch.

To install PSUs in the switch :

1. Insert the PSU into the PSU slot on the rear of the switch.
2. Insert the thumb screws and tighten the screws to secure the PSU into the switch.

Remove Power Supply Units in an EX4100-H-24MP or EX4100-H-24F Switch

Before you remove a power supply from an EX4100-H switch, ensure that you have taken the necessary precautions to prevent electrostatic discharge (ESD) damage (see Prevention of Electrostatic Discharge Damage).

Ensure that you have the following parts and tools available to remove a power supply from an EX4100-H switch:

- ESD grounding strap
- Phillips (+) screwdriver, number 2 (not provided)

- Antistatic bag or an antistatic mat
- Replacement power supply or a cover panel for the power supply slot

The power supplies in EX4100-H switches are hot-removable and hot-insertable field-replaceable units (FRUs) installed in the rear panel of the switch. If two power supplies are installed, you can remove and replace them without powering off the switch or disrupting switch functions.



NOTE: If only one power supply is installed in the switch, you must power off the switch before removing the power supply.



CAUTION: We recommend that you install either a replacement power supply or a cover panel in the empty power supply slot to prevent chassis overheating and dust accumulation.

To remove an power supply from the switch:

1. Place the antistatic bag or the antistatic mat on a flat, stable surface.
2. Attach the ESD grounding strap to your bare wrist, and connect the strap to the ESD point on the chassis.
3. If the power source outlet has a power switch, set it to the OFF (**O**) position.
4. Loosen the thumbnail screws and remove the PSU from the PSU slot.

CHAPTER 6

Troubleshoot Hardware

IN THIS CHAPTER

- Troubleshoot the EX4100-H Components | **168**

Troubleshoot the EX4100-H Components

IN THIS SECTION

- Chassis Component Alarm Conditions on EX4100-H Switches | 168
- Troubleshoot Temperature Alarms in EX4100-H Series Switches | 171
- EX4100-H Switch Hardware and CLI Terminology Mapping | 175

Chassis Component Alarm Conditions on EX4100-H Switches

This topic describes the chassis component alarm conditions on EX4100-H switches.

Table 41 on page 168 lists the alarms that the chassis components can generate on EX4100-H switches. The table lists the severity levels of these alarms and the actions that you can take to respond to them.

Table 41: Chassis Component Alarm Conditions on EX4100-H Switches

Chassis Component	Alarm Condition	Alarm Severity	Remedy
Power supply	A power supply has been removed from the chassis.	Minor	Install a power supply in the empty slot.
	A power supply output has failed.	Major	Check the power supply output connection.
	A power supply has failed.	Major	Replace the failed power supply.
	An unknown power supply is installed.	Major	Install a power supply recommended by Juniper Networks.

Table 41: Chassis Component Alarm Conditions on EX4100-H Switches *(Continued)*

Chassis Component	Alarm Condition	Alarm Severity	Remedy
	A mix of power supplies with different airflow directions is installed.	Major	Do not mix power supplies with different airflow directions in the same chassis.
Temperature	The temperature inside the chassis reached the red alarm limit.	Major	• Open a support case using the Case Manager link at https://www.juniper.net/support/, or call 1-888-314-5822 (toll-free within the United States and Canada) or 1-408-745-9500 (from outside the United States).
Humidity	The humidity inside the chassis reached the red alarm limit.	Major	• Open a support case using the Case Manager link at https://www.juniper.net/support/, or call 1-888-314-5822 (toll-free within the United States and Canada) or 1-408-745-9500 (from outside the United States).
	The humidity inside the chassis reached the yellow alarm limit.	Minor	• Open a support case using the Case Manager link at https://www.juniper.net/support/, or call 1-888-314-5822 (toll-free within the United States and Canada) or 1-408-745-9500 (from outside the United States).

Table 41: Chassis Component Alarm Conditions on EX4100-H Switches *(Continued)*

Chassis Component	Alarm Condition	Alarm Severity	Remedy
Management Ethernet interface	The Management Ethernet link is down.	Major	• Check whether a cable is connected to the Management Ethernet interface or whether the cable is defective. Replace the cable, if required. • If you are unable to resolve the problem, open a support case using the Case Manager link at https://www.juniper.net/support/, or call 1-888-314-5822 (toll-free within the United States and Canada) or 1-408-745-9500 (from outside the United States).
Routing Engine	The **/var** partition usage is high.	Minor	Clean up the system file storage space on the switch. For more information, see Freeing Up System Storage Space.
	The **/var** partition is full.	Major	Clean up the system file storage space on the switch. For more information, see Freeing Up System Storage Space.
	A rescue configuration is not set.	Minor	Use the `request system configuration rescue save` command to set the rescue configuration.
	The feature usage requires a license, or the license for the feature usage has expired.	Minor	Install the required license for the feature specified in the alarm. For more information, see Understanding Software Licenses for EX Series Switches.

Troubleshoot Temperature Alarms in EX4100-H Series Switches

IN THIS SECTION

- Problem | 171
- Cause | 171
- Solution | 171

Problem

Description

EX Series switches trigger a temperature alarm `FPC 0 EX-PFE1 Temp Too Hot` when the switch temperature becomes too hot.

Cause

Temperature sensors in the chassis monitor the temperature of the chassis. The switch triggers if the temperature of the chassis exceeds permissible levels for some other reason.

Solution

When the switch triggers a temperature alarm such as the `FPC 0 EX-PFE1 Temp Too Hot` alarm, use the `show chassis environment` and the `show chassis temperature-thresholds` commands to identify the condition that triggered the alarm.



CAUTION: To prevent the switch from overheating, operate it in an area with an ambient temperature within the recommended range. To prevent airflow restriction, allow at least 2 inches (5.08 cm) of clearance around the ventilation openings., refer Table 28 on page 60.

1. Connect to the switch by using Telnet, and issue the `show chassis environment` command. This command displays environmental information about the switch chassis, including the temperature. Following is a sample output on an EX4100-H-12MP switch.

show chassis environment

```
user@switch> show chassis environment

Class Item                          Status     Measurement
Power FPC 0 Power Supply 0          OK
      FPC 0 Power Supply 1          Absent
Temp  FPC 0 Switch board Sensor 1   OK         46 degrees C / 114 degrees F
      FPC 0 Switch board Sensor 2   OK         47 degrees C / 116 degrees F
      FPC 0 PFE Die Sensor          OK         55 degrees C / 131 degrees F
      FPC 0 Uplink Board Sensor 1   OK         40 degrees C / 104 degrees F
      FPC 0 Uplink Board Sensor 2   OK         43 degrees C / 109 degrees F
      FPC 0 PoE board Sensor 1      OK         51 degrees C / 123 degrees F
      FPC 0 PoE Controller Sensor 1 OK         32 degrees C / 89 degrees F
      FPC 0 PoE Controller Sensor 2 OK         32 degrees C / 89 degrees F
      FPC 0 PoE Controller Sensor 3 OK         33 degrees C / 91 degrees F
      FPC 0 Pic 2 Xcvr 1            OK         32 degrees C / 89 degrees F
Humid FPC 0 Humidity Sensor 1       OK         15 Percent RH
```

The following table lists the output fields for the `show chassis environment` command. The table lists output fields in the approximate order in which they appear.

Table 42: `show chassis environment` Output Fields

Field Name	Field Description
`Class`	Information about the category or class of chassis component: • `Power`: Status of power supply in the switch • `Temp`: Temperature of air flowing through the chassis in degrees Celsius (°C) and degrees Fahrenheit (°F) • `Humid`: Status of relative humidity in the switch.

Table 42: `show chassis environment` Output Fields *(Continued)*

Field Name	Field Description
`Item`	Information about the chassis components: • Flexible PIC Concentrators (FPCs)—that is, the line cards • Control Boards (CBs) • Routing Engines • Power entry modules (PEMs)—that is, the power supplies
`Status`	Status of the specified chassis component. For example, if `Class` is `Power`, the status can be: • `OK`: The component is operational. • `Testing`: The power supply unit is being tested during initial power-on. • `Failed`: The power supply unit has failed. • `Absent`: The power supply unit is not connected to the switch.
`Measurement`	Depends on the Class. For example, if `Class` is `Temp`, indicates the temperature in degrees Celsius (°C) and degrees Fahrenheit (°F). If the `Class` is `Humid`, indicates humidity in percent relative humidity.

2. Issue the command `show chassis temperature-thresholds` . This command displays the chassis temperature threshold settings. The following is a sample output on an EX4100-H-12MP switch. Note that some columns that do not apply to the switch are displayed as N/A or not applicable.

`show chassis temperature-thresholds.`

```
user@ host> show chassis temperature-thresholds
                                     Fan speed      Yellow alarm      Red alarm      Fire
Shutdown
                                    (degrees C)      (degrees C)     (degrees C)
(degrees C)
Item                               Normal  High   Normal  Bad fan   Normal  Bad fan
Normal
```

```
FPC 0 Switch board Sensor 1              N/A   N/A      N/A      N/A      108      N/A
110
FPC 0 Switch board Sensor 2              N/A   N/A      N/A      N/A      108      N/A
110
FPC 0 PFE Die Sensor                     N/A   N/A      N/A      N/A      109      N/A
113
FPC 0 Uplink Board Sensor 1              N/A   N/A      N/A      N/A      108      N/A
110
FPC 0 Uplink Board Sensor 2              N/A   N/A      N/A      N/A      108      N/A
110
FPC 0 PoE board Sensor 1                 N/A   N/A      N/A      N/A      108      N/A
110
FPC 0 PoE Controller Sensor 1            N/A   N/A      N/A      N/A      122      N/A
125
FPC 0 PoE Controller Sensor 2            N/A   N/A      N/A      N/A      122      N/A
125
FPC 0 PoE Controller Sensor 3            N/A   N/A      N/A      N/A      122      N/A
125
FPC 0 Pic 2 Xcvr 1                       N/A   N/A      N/A      N/A       75      N/
A         76
```

Table 43 on page 174 lists the output fields for the `show chassis temperature-thresholds` command. The table lists output fields in the approximate order in which they appear.

Table 43: `show chassis temperature-thresholds` Output Fields

Field Name	Field Description
Item	Chassis component. You can configure the threshold information for components such as the chassis, the Routing Engines, and FPC for each slot in each FRU to display in the output. By default, information is displayed only for the chassis and the Routing Engines.
Red alarm	Temperature threshold, in degrees Celsius, that triggers a red alarm. • **Normal**—The temperature threshold that must be exceeded on the device to trigger a red alarm.
Fire shutdown	Temperature threshold, in degrees Celsius, at which the switch shuts down in case of fire.

When a temperature alarm is triggered, you can identify the condition that triggered it by running the `show chassis environment` command to display the chassis temperature values for each component and comparing those with the temperature threshold values. You can display the temperature threshold values by running the `show chassis temperature-thresholds` command.

Table 44 on page 175 lists the possible causes for the switch to generate a temperature alarm. It also lists the respective remedies.

Table 44: Causes and Remedies for Temperature Alarms

Cause	Remedy
Ambient temperature is above threshold temperature.	Ensure that the ambient temperature is within the threshold temperature limit. See Environmental Requirements and Specifications for EX Series Switches.
Restricted airflow through the switch due to insufficient clearance around the installed switch.	Ensure that there is sufficient clearance around the installed switch. For EX4100-H-12MP switches, see Table 28 on page 60.

EX4100-H Switch Hardware and CLI Terminology Mapping

This topic describes the hardware terms used in EX4100-H switch documentation and the corresponding terms used in the Junos OS CLI (see Table 45 on page 176).

Table 45: CLI Equivalents of Terms Used in the Documentation for EX4100-H Switches

Hardware Item (CLI)	Description (CLI)	Value	Item In Documentation	Additional Information
Chassis	One of the following: • EX4100-H-12MP • EX4100-H-24MP • EX4100-H-24F	–	Switch chassis	"EX4100-H Switch Models" on page 18
Routing Engine (*n*)	One of the following: • RE-EX4100-H-12MP • RE-EX4100-H-24MP • RE-EX4100-H-24F	*n* is a value in the range 0 through 9. • In a standalone switch, the default value is 0. • In a Virtual Chassis configuration, the values correspond to the member IDs of switches configured in the primary role and the backup role in the Virtual Chassis.	Routing Engine	–
FPC (*n*)	Abbreviated name of the Flexible PIC Concentrator (FPC)	n is a value in the range 0 through 9.		Understanding Interface Naming Conventions
	One of the following: • EX4100-H-12MP-CHAS	In a standalone switch, the default value is 0.	In this case, FPC refers to the switch itself.	

Table 45: CLI Equivalents of Terms Used in the Documentation for EX4100-H Switches *(Continued)*

Hardware Item (CLI)	Description (CLI)	Value	Item In Documentation	Additional Information
	• EX4100-H-24MP-CHAS • EX4100-H-24F-CHAS	In a Virtual Chassis configuration, the values correspond to the assigned member IDs of switches in the Virtual Chassis.	In this case, the FPC number refers to the member ID assigned to the switch.	
PIC (*n*)	Abbreviated name of the Physical Interface Card (PIC)	*n* is a value in the range 0 through 2.		Understanding Interface Naming Conventions
	One of the following: • EX4100-H-12MP Switches: 4x100M/1G/2.5G, 8x10M/100M/1G Base-T • EX4100-H-24MP Switches: 8x100M/1G/2.5G, 16x10M/100M/1G • EX4100-H-24F Switches: 24x10M/100M/1G SFP	PIC 0	PIC 0 stands for built-in network ports numbered **0** through **11** or **0** through **23** or **0** through **47**	"EX4100-H Switch Models" on page 18

Table 45: CLI Equivalents of Terms Used in the Documentation for EX4100-H Switches *(Continued)*

Hardware Item (CLI)	Description (CLI)	Value	Item In Documentation	Additional Information
	One of the following: • EX4100-H-12MP switches: 2x1G/10G SFP/SFP+ • EX4100-H-24MP switches: 4x1G/10G SFP/SFP+ • EX4100-H-24F switches: 4x1G/10G SFP/SFP+	PIC 1	SFP/SFP+ dedicated virtual chassis ports	"EX4100-H Switch Models" on page 18
	One of the following: • EX4100-H-12MP switches: 2x1G/10G SFP/SFP+ • EX4100-H-24MP switches: 4x1G/10G SFP/SFP+ • EX4100-H-24F switches: 4x1G/10G SFP/SFP+	PIC 2	SFP/SFP+ uplink ports	"EX4100-H Switch Models" on page 18

Table 45: CLI Equivalents of Terms Used in the Documentation for EX4100-H Switches *(Continued)*

Hardware Item (CLI)	Description (CLI)	Value	Item In Documentation	Additional Information
Xcvr (*n*)	Abbreviated name of the transceiver	*n* is a value equivalent to the number of the port in which the transceiver is installed.	Optical transceivers	"Pluggable Transceivers and Cables Supported on EX4100-H Switches" on page 67
Power supply (*n*)	One of the following: • JPSU-H-340W-E • JPSU-H-340W-AC • JPSU-H-340W-DC • JPSU-H-90W-AC • JPSU-H-90W-DC	*n* has a value 0 or 1, corresponding to the power supply slot number.	AC power supply or DC power supply	• "AC Power Supply Unit in EX4100-H Switches" on page 42

CHAPTER 7

Contact Customer Support and Return the Chassis or Components

IN THIS CHAPTER

- Return an EX4100-You can identify the external 340 W AC PSUH Chassis or Component | **181**

Return an EX4100-You can identify the external 340 W AC PSUH Chassis or Component

IN THIS SECTION

- How to Return an EX4100-H Switch or Component for Repair or Replacement | **181**
- Locate the Serial Number on an EX4100-H Switch or Component | **182**
- Contact Customer Support to Obtain a Return Material Authorization | **188**
- Pack an EX4100-H Switch or Component for Shipping | **189**

How to Return an EX4100-H Switch or Component for Repair or Replacement

If you need to return a switch or hardware component to Juniper Networks for repair or replacement, follow this procedure:

1. Determine the serial number of the chassis if you need to return the switch. If you need to return one or more components, determine the serial number for each component. For instructions, see "Locate the Serial Number on an EX4100-H Switch or Component" on page 182.
2. Obtain a Return Material Authorization (RMA) number from the Juniper Networks Technical Assistance Center (JTAC) as described in Contact Customer Support to Obtain Return Material Authorization.

   NOTE: Obtain an RMA number before you return any component to Juniper Networks. Juniper Networks reserves the right to refuse shipments that lack an RMA. Refused shipments are returned to the customer through collect freight, meaning that you pay for the returned delivery.

3. Pack the switch or component for shipping as described in "Pack an EX4100-H Switch or Component for Shipping" on page 189.

For more information about return and repair policies, see the customer support page at https://www.juniper.net/support/guidelines.html.

Locate the Serial Number on an EX4100-H Switch or Component

IN THIS SECTION

- List the Switch and Components Details with the CLI | **182**
- Locate the Chassis Serial Number ID Label on an EX4100-H Switch | **186**
- Locate the Serial Number ID Labels on external PSUs of an EX4100-H Switch | **187**

If you are returning a switch or hardware component to Juniper Networks for repair or replacement, you must locate the serial number of the switch or component. You must provide the serial number to the Juniper Networks Technical Assistance Center (JTAC) to obtain a Return Material Authorization (RMA) number.

If the switch is operational and you can access the CLI, you can list serial numbers for the switch and for some components with a CLI command.

You can also find the serial number ID label on the physical switch or component. This option is helpful in either of these instances:

- You do not have access to the CLI.
- The serial number does not appear in the command output.

NOTE: If you want to find the serial number on the physical switch component, you will need to remove the component from the switch chassis.

List the Switch and Components Details with the CLI

To list the switch and switch components and their serial numbers, enter the CLI command `show chassis hardware extensive`.

The following output lists the switch components and serial numbers for an EX4100-H switch.

```
show chassis hardware extensive
Hardware inventory:
Item             Version  Part number  Serial number     Description
Chassis                                GE4523AW0008      EX4100-H-12MP
Jedec Code:   0x0000            EEPROM Version:    0x00
                                 S/N:               GE4523AW0008
Assembly ID:  0xf000            Assembly Version:  00.00
Date:         01-01-1970        Assembly Flags:    0x00
Board Information Record:
  Address 0x00: 00 00 00 00 00 00 00 00 00 00 00 00 00 00 00 00
I2C Hex Data:
  Address 0x00: 00 00 00 00 f0 00 00 00 00 00 00 00 00 00 00 00
  Address 0x10: 00 00 00 00 00 00 00 00 00 00 00 00 00 00 00 00
  Address 0x20: 47 45 34 35 32 33 41 57 30 30 30 38 00 00 00 00
  Address 0x30: 00 00 00 00 00 00 00 00 00 00 00 00 00 00 00 00
  Address 0x40: 00 00 00 00 00 00 00 00 00 00 00 00 00 00 00 00
  Address 0x50: 00 00 00 00 00 00 00 00 00 00 00 00 00 00 00 00
  Address 0x60: 00 00 00 00 00 00 00 00 00 00 00 00 00 00 00 00
  Address 0x70: 00 00 00 00 00 00 00 00 00 00 00 00 00 00 00 00
Pseudo CB 0
Routing Engine 0          BUILTIN      BUILTIN           RE-EX4100-H-12MP
Jedec Code:   0x7fb0            EEPROM Version:    0x02
P/N:          BUILTIN           S/N:               BUILTIN
Assembly ID:  0xf010            Assembly Version:  01.01
Date:         11-23-2023        Assembly Flags:    0x00
                                 CLEI Code:         DUMMY-CLEI
                                 FRU Model Number:  EX4100-H-12MP
Board Information Record:
  Address 0x00: ad 01 00 80 ac a0 9d 66 01 80 ff ff ff ff ff ff
I2C Hex Data:
  Address 0x00: 7f b0 02 fe f0 10 01 01 00 00 00 00 00 00 00 00
  Address 0x10: 00 00 00 00 42 55 49 4c 54 49 4e 00 00 00 00 00
  Address 0x20: 42 55 49 4c 54 49 4e 00 00 00 00 00 00 17 0b 07
  Address 0x30: e7 ff ff ff ad 01 00 80 ac a0 9d 66 01 80 ff ff
  Address 0x40: ff ff ff ff 01 44 55 4d 4d 59 2d 43 4c 45 49 45
  Address 0x50: 58 34 31 30 30 2d 48 2d 31 32 4d 50 00 00 00 00
  Address 0x60: 00 00 00 00 00 00 31 00 00 ff ff ff ff ff ff ff
  Address 0x70: ff ff ff 02 47 45 34 35 32 33 41 57 30 30 30 38
  flash/s     8 MB  w25q64                                SPI Flash
  usb0 (addr 0.1) XHCI root HUB 0      Generic           uhub0
```

```
  usb1 (addr 0.1) product 0x8027 32807 vendor 0x0451     uhub1
  usb2 (addr 0.2) USB Flash Module 72  Swissbit          umass0
FPC 0            REV 01   650-171853   GE4523AW0008      EX4100-H-12MP
Jedec Code:   0x7fb0            EEPROM Version:    0x02
P/N:          650-171853        S/N:               GE4523AW0008
Assembly ID:  0x0dff            Assembly Version:  01.01
Date:         11-23-2023        Assembly Flags:    0x00
Version:      REV 01            CLEI Code:         DUMMY-CLEI
ID: EX4100-H-12MP               FRU Model Number:  EX4100-H-12MP
Board Information Record:
  Address 0x00: ad 01 00 80 ac a0 9d 66 01 80 ff ff ff ff ff ff
I2C Hex Data:
  Address 0x00: 7f b0 02 fe 0d ff 01 01 52 45 56 20 30 31 00 00
  Address 0x10: 00 00 00 00 36 35 30 2d 31 37 31 38 35 33 00 00
  Address 0x20: 47 45 34 35 32 33 41 57 30 30 30 38 00 17 0b 07
  Address 0x30: e7 ff ff ff ad 01 00 80 ac a0 9d 66 01 80 ff ff
  Address 0x40: ff ff ff ff 01 44 55 4d 4d 59 2d 43 4c 45 49 45
  Address 0x50: 58 34 31 30 30 2d 48 2d 31 32 4d 50 00 00 00 00
  Address 0x60: 00 00 00 00 00 00 31 00 00 ff ff ff ff ff ff ff
  Address 0x70: ff ff ff 02 47 45 34 35 32 33 41 57 30 30 30 38
  CPU                    BUILTIN      BUILTIN           FPC CPU
Jedec Code:   0x7fb0            EEPROM Version:    0x02
P/N:          BUILTIN           S/N:               BUILTIN
Assembly ID:  0xf020            Assembly Version:  01.01
Date:         11-23-2023        Assembly Flags:    0x00
Board Information Record:
  Address 0x00: ad 01 00 80 ac a0 9d 66 01 80 ff ff ff ff ff ff
I2C Hex Data:
  Address 0x00: 7f b0 02 fe f0 20 01 01 00 45 56 20 30 31 00 00
  Address 0x10: 00 00 00 00 42 55 49 4c 54 49 4e 00 35 33 00 00
  Address 0x20: 42 55 49 4c 54 49 4e 00 30 30 30 38 00 17 0b 07
  Address 0x30: e7 ff ff ff ad 01 00 80 ac a0 9d 66 01 80 ff ff
  Address 0x40: ff ff ff ff 00 44 55 4d 4d 59 2d 43 4c 45 49 45
  Address 0x50: 58 34 31 30 30 2d 48 2d 31 32 4d 50 00 00 00 00
  Address 0x60: 00 00 00 00 00 00 31 00 00 ff ff ff ff ff ff ff
  Address 0x70: ff ff ff 02 47 45 34 35 32 33 41 57 30 30 30 38
  PIC 0          REV 01   BUILTIN      BUILTIN           4x100M/1G/2.5G, 8x10M/100M/1G Base-T
Jedec Code:   0x7fb0            EEPROM Version:    0x02
P/N:          BUILTIN           S/N:               BUILTIN
Assembly ID:  0xf050            Assembly Version:  01.01
Date:         11-23-2023        Assembly Flags:    0x00
Version:      REV 01            CLEI Code:         DUMMY-CLEI
                                 FRU Model Number:  EX4100-H-12MP
```

```
Board Information Record:
  Address 0x00: ad 01 00 80 ac a0 9d 66 01 80 ff ff ff ff ff ff
I2C Hex Data:
  Address 0x00: 7f b0 02 fe f0 50 01 01 52 45 56 20 30 31 00 00
  Address 0x10: 00 00 00 00 42 55 49 4c 54 49 4e 00 35 33 00 00
  Address 0x20: 42 55 49 4c 54 49 4e 00 30 30 30 38 00 17 0b 07
  Address 0x30: e7 ff ff ff ad 01 00 80 ac a0 9d 66 01 80 ff ff
  Address 0x40: ff ff ff ff 01 44 55 4d 4d 59 2d 43 4c 45 49 45
  Address 0x50: 58 34 31 30 30 2d 48 2d 31 32 4d 50 00 00 00 00
  Address 0x60: 00 00 00 00 00 00 31 00 00 ff ff ff ff ff ff ff
  Address 0x70: ff ff ff 02 55 55 55 55 55 55 55 55 55 55 55 55
  PIC 1          REV 01   650-171853   GE4523AW0008      2x1G/10G SFP/SFP+
Jedec Code:   0x7fb0            EEPROM Version:    0x02
P/N:          650-171853        S/N:               GE4523AW0008
Assembly ID:  0xf051            Assembly Version:  01.01
Date:         11-23-2023        Assembly Flags:    0x00
Version:      REV 01            CLEI Code:         DUMMY-CLEI
                                 FRU Model Number:  EX4100-H-12MP
Board Information Record:
  Address 0x00: ad 01 00 80 ac a0 9d 66 01 80 ff ff ff ff ff ff
I2C Hex Data:
  Address 0x00: 7f b0 02 fe f0 51 01 01 52 45 56 20 30 31 00 00
  Address 0x10: 00 00 00 00 36 35 30 2d 31 37 31 38 35 33 00 00
  Address 0x20: 47 45 34 35 32 33 41 57 30 30 30 38 00 17 0b 07
  Address 0x30: e7 ff ff ff ad 01 00 80 ac a0 9d 66 01 80 ff ff
  Address 0x40: ff ff ff ff 01 44 55 4d 4d 59 2d 43 4c 45 49 45
  Address 0x50: 58 34 31 30 30 2d 48 2d 31 32 4d 50 00 00 00 00
  Address 0x60: 00 00 00 00 00 00 31 00 00 ff ff ff ff ff ff ff
  Address 0x70: ff ff ff 02 55 55 55 55 55 55 55 55 55 55 55 55
  PIC 2          REV 01   650-171853   GE4523AW0008      2x1G/10G SFP/SFP+
Jedec Code:   0x7fb0            EEPROM Version:    0x02
P/N:          650-171853        S/N:               GE4523AW0008
Assembly ID:  0xf052            Assembly Version:  01.01
Date:         11-23-2023        Assembly Flags:    0x00
Version:      REV 01            CLEI Code:         DUMMY-CLEI
                                 FRU Model Number:  EX4100-H-12MP
Board Information Record:
  Address 0x00: ad 01 00 80 ac a0 9d 66 01 80 ff ff ff ff ff ff
I2C Hex Data:
  Address 0x00: 7f b0 02 fe f0 52 01 01 52 45 56 20 30 31 00 00
  Address 0x10: 00 00 00 00 36 35 30 2d 31 37 31 38 35 33 00 00
  Address 0x20: 47 45 34 35 32 33 41 57 30 30 30 38 00 17 0b 07
  Address 0x30: e7 ff ff ff ad 01 00 80 ac a0 9d 66 01 80 ff ff
```

```
  Address 0x40: ff ff ff ff 01 44 55 4d 4d 59 2d 43 4c 45 49 45
  Address 0x50: 58 34 31 30 30 2d 48 2d 31 32 4d 50 00 00 00 00
  Address 0x60: 00 00 00 00 00 00 31 00 00 ff ff ff ff ff ff ff
  Address 0x70: ff ff ff 02 55 55 55 55 55 55 55 55 55 55 55 55
Power Supply 0            EXTERNAL     EXTERNAL          JPSU-H-340W-E
Jedec Code:   0x7fb0            EEPROM Version:    0x00
P/N:          EXTERNAL          S/N:               EXTERNAL
Assembly ID:  0xf030            Assembly Version:  00.00
Date:         01-01-1970        Assembly Flags:    0x00
Board Information Record:
  Address 0x00: 00 00 00 00 00 00 00 00 00 00 00 00 00 00 00 00
I2C Hex Data:
  Address 0x00: 7f b0 00 00 f0 30 00 00 00 00 00 00 00 00 00 00
  Address 0x10: 00 00 00 00 45 58 54 45 52 4e 41 4c 00 00 00 00
  Address 0x20: 45 58 54 45 52 4e 41 4c 00 00 00 00 00 00 00 00
  Address 0x30: 00 00 00 00 00 00 00 00 00 00 00 00 00 00 00 00
  Address 0x40: 00 00 00 00 00 00 00 00 00 00 00 00 00 00 00 00
  Address 0x50: 00 00 00 00 00 00 00 00 00 00 00 00 00 00 00 00
  Address 0x60: 00 00 00 00 00 00 00 00 00 00 00 00 00 00 00 00
  Address 0x70: 00 00 00 00 00 00 00 00 00 00 00 00 00 00 00 00
```

For information about the `show chassis hardware` command, see show chassis hardware.

Locate the Chassis Serial Number ID Label on an EX4100-H Switch

As indicated by the following figures, locate the serial number ID label of an EX4100-H.

Figure 75: Location of the Serial Number ID Label on EX4100-H-12MP Switch

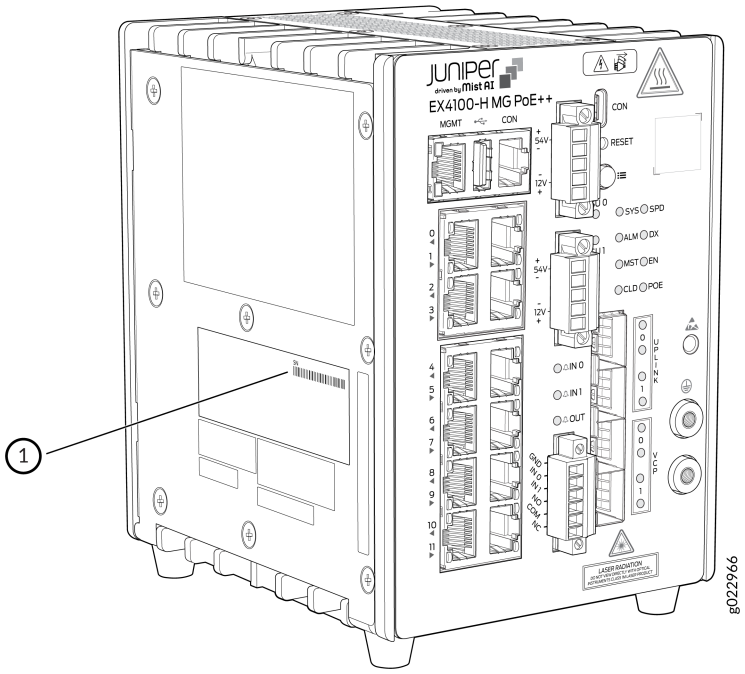

1– Serial Number ID Label	

Locate the Serial Number ID Labels on external PSUs of an EX4100-H Switch

You can identify the external 340 W AC or 340 W DC PSU by way of the serial number ID label.

- *Power supply*—The serial number ID label is on the top of the power supply.

Figure 76: Location of the Serial Number ID Label on the 340 W External Power Supply Used for EX4100-H-12MP Switch

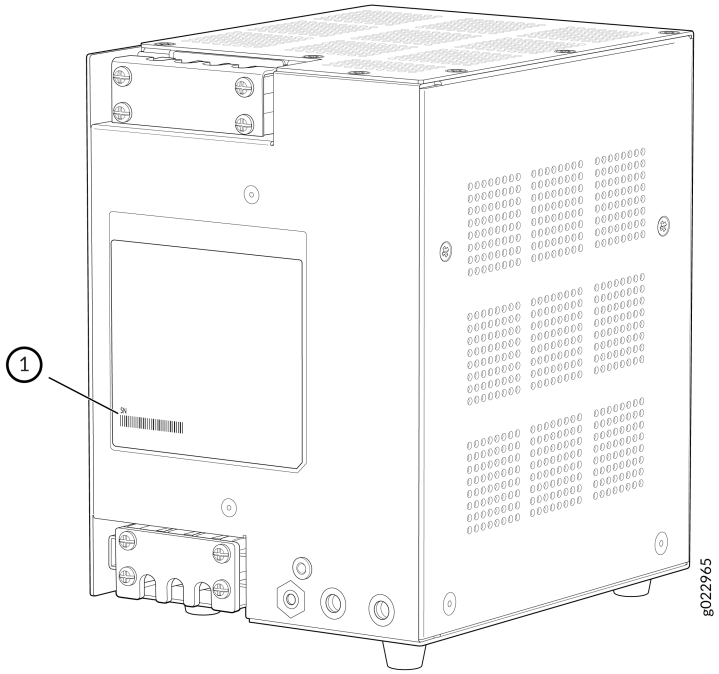

1– Serial Number ID Label

Contact Customer Support to Obtain a Return Material Authorization

If you need to return a device or hardware component to Juniper Networks for repair or replacement, obtain an RMA number from JTAC. You must obtain an RMA number before you attempt to return the component.

After locating the serial number of the device or hardware component you want to return, open a service request with the JTAC on the Web or by telephone.

Before you request an RMA number from JTAC, be prepared to provide the following information:

- Your existing service request number, if you have one
- Serial number of the component
- Your name, organization name, telephone number, fax number, and shipping address
- Details of the failure or problem

- Type of activity being performed on the device when the problem occurred
- Configuration data displayed by one or more `show` commands

You can contact JTAC 24 hours a day, seven days a week, on the Web or by telephone:

- Service Request Manager: https://support.juniper.net/support
- Telephone: +1-888-314-JTAC (+1-888-314-5822), toll free in U.S., Canada, and Mexico



NOTE: For international or direct-dial options in countries without toll free numbers, see https://support.juniper.net/support.

If you are contacting JTAC by telephone, enter your 12-digit service request number followed by the pound (#) key for an existing case, or press the star (*) key to be routed to the next available support engineer.

The support representative validates your request and issues an RMA number for return of the component.

Pack an EX4100-H Switch or Component for Shipping

IN THIS SECTION

- Pack an EX4100-H Switch for Shipping | **190**
- Pack EX4100-H Switch Components for Shipping | **191**

If you are returning the switch or component to Juniper Networks for repair or replacement, pack the item as described in this topic.

Before you pack the switch or component, ensure that you have:

- Followed all the steps listed in Contact Customer Support to Obtain a Return Material Authorization.
- Retrieved the original shipping carton and packing materials. Contact your JTAC representative if you do not have these materials, to learn about approved packing materials (see Contact Customer Support to Obtain a Return Material Authorization).
- Ensure that you understand how to prevent electrostatic discharge (ESD) damage (see No Link Title).

Pack an EX4100-H Switch for Shipping

Before you pack the switch:

1. On the console or other management device connected to the switch, enter the CLI operational mode and issue the following command to shut down the switch software:

   ```
   user@switch> request system halt
   ```

   Wait until a message appears on the console confirming that the operating system has halted.

2. Disconnect power from the switch.
3. Remove the cables that connect the switch to external devices.
4. Remove all optical transceivers installed in the switch (see Remove a Transceiver).

If you need to transport the switch to another location or return the switch to Juniper Networks, you need to pack the switch securely in its original packaging to prevent damage during shipping.

Ensure that you have the following parts and tools:

- Number 2 Phillips (+) screwdriver—not provided
- The original switch packing material (cardboard box, accessory box and its contents, and foam padding)
- An ESD grounding strap—not provided
- Antistatic bag—not provided



CAUTION: Do not pack the switch in anything except its original container, or the switch might be damaged in transit.

To pack the switch:

1. If the switch is installed in a rack or cabinet, have one person support the weight of the switch while another person unscrews and removes the mounting screws.
2. Remove the switch from the rack or cabinet and place the switch on a flat, stable surface.
3. Use the screwdriver to remove the rack mounting brackets from the switch chassis.
4. Place the switch in an antistatic bag.
5. Place the bottom portion of the packaging foam in the shipping carton.
6. Place the switch inside the cavity in the bottom packaging foam.
7. Place the top portion of the packaging foam on top of the switch.

8. If you are returning accessories or field-replaceable units (FRUs) with the switch, pack them as instructed in "Pack EX4100-H Switch Components for Shipping" on page 191.
9. Place the accessory box by the rear end of the chassis in the shipping carton.
10. Close the top of the cardboard shipping box and seal it with packing tape.
11. Write the RMA number on the exterior of the box to ensure proper tracking.

Pack EX4100-H Switch Components for Shipping

Ensure that you have the following parts and tools available:

- Antistatic bag, one for each component—not provided
- An ESD grounding strap—not provided

To pack the switch components:



CAUTION: Do not stack switch components. Return individual components in separate boxes if they do not fit together on one level in the shipping box.

- Place individual components in antistatic bags.
- Use the original packing materials if they are available. If the original packing materials are not available, ensure the component is adequately packed to prevent damage during transit. The packing material you use must be able to support the weight of the component.
- Ensure that the components are adequately protected by wrapping them well with packing materials. Pack the component in an oversized box (if the original box is not available) with extra packing material around the unit so that the component is prevented from moving around inside the box.
- Securely tape the box closed.
- Write the RMA number on the exterior of the box to ensure proper tracking.

8
CHAPTER

Safety and Compliance Information

IN THIS CHAPTER

- Safety Information for EX4100-H | **194**
- AC Power Electrical Safety Guidelines | **194**
- General Laser Safety Guidelines | **194**
- General Safety Guidelines and Warnings | **195**
- Laser LED Safety Guidelines | **197**
- Multiple Power Supplies Disconnection Warning | **198**
- Qualified Personnel Warning | **198**
- Restricted Access Warning | **199**
- TN Power Warning | **200**
- Hazardous Area Installation Warning | **200**
- General Electrical Safety Guidelines and Warnings | **201**
- Definitions of Safety Warning Levels | **202**
- Qualified Personnel Warning | **204**
- Warning Statement for Norway and Sweden | **205**
- Fire Safety Requirements | **205**
- Installation Instructions Warning | **206**
- Chassis and Component Lifting Guidelines | **207**
- Restricted Access Warning | **208**
- Ramp Warning | **209**
- Cabinet-Mounting Warnings | **210**
- Grounded Equipment Warning | **214**
- Radiation from Open Port Apertures Warning | **215**

- Laser and LED Safety Guidelines and Warnings | **216**
- Maintenance and Operational Safety Guidelines and Warnings | **218**
- Action to Take After an Electrical Accident | **224**
- Prevention of Electrostatic Discharge Damage | **224**
- Compliance Standards for EX4100-H Switches | **226**
- Compliance Statements for EMC Requirements for EX Series Switches | **229**
- Statements of Volatility for Juniper Network Devices | **233**

Safety Information for EX4100-H

The Juniper Networks Safety Guide provides general safety information and guidelines for all Juniper Networks products. Follow the guidelines provided in the guide to reduce the likelihood of personal injury, equipment damage, and damage to surrounding areas.

Along with the information provided in the Juniper Networks Safety Guide, you must read and understand the *EX4100-H* specific safety information provided in this hardware guide.

AC Power Electrical Safety Guidelines

For devices that have more than one power supply connection, you must ensure that all power connections are fully disconnected so that power to the device is completely removed to prevent electric shock. To disconnect power, unplug all power cords (one for each power supply).



CAUTION: This unit has more than one PSU connector. Disconnect all PSU connectors (PSU 0 and PSU 1) before servicing.



CAUTION: ATTENTION - Danger de choc Déconnecter toutes les sources d'énergie" ou texte equivalent

Safety Instructions

Refer Safety Guide.

General Laser Safety Guidelines

When working around ports that support optical transceivers, observe the following safety guidelines to prevent eye injury:

- Do not look into unterminated ports or at fibers that connect to unknown sources.
- Do not examine unterminated optical ports with optical instruments.
- Avoid direct exposure to the beam.

General Safety Guidelines and Warnings

The following guidelines help ensure your safety and protect the device from damage. The list of guidelines might not address all potentially hazardous situations in your working environment, so be alert and exercise good judgment at all times.

- Perform only the procedures explicitly described in the hardware documentation for this device. Make sure that only authorized service personnel perform other system services.
- Keep the area around the device clear and free from dust before, during, and after installation.
- Keep tools away from areas where people could trip over them while walking.
- Do not wear loose clothing or jewelry, such as rings, bracelets, or chains, which could become caught in the device.
- Wear safety glasses if you are working under any conditions that could be hazardous to your eyes
- Never attempt to lift an object that is too heavy for one person to handle.
- Never install electrical jacks in wet locations unless the jacks are specifically designed for wet environments.
- Operate the device only when it is properly grounded.
- Do not open or remove chassis covers or sheet-metal parts unless instructions are provided in the hardware documentation for this device. Such an action could cause severe electrical shock.
- Do not push or force any objects through any opening in the chassis frame. Such an action could result in electrical shock or fire.
- Avoid spilling liquid onto the chassis or onto any device component. Such an action could cause electrical shock or damage the device.
- Avoid touching uninsulated electrical wires or terminals that have not been disconnected from their power source. Such an action could cause electrical shock.
- Some parts of the chassis, including AC and DC power supply surfaces, power supply unit handles, SFB card handles, and fan tray handles might become hot. The following label provides the warning for hot surfaces on the chassis:



- Always ensure that all modules, power supplies, and cover panels are fully inserted and the installation screws are fully tightened.
- Single/two-hole system grounding is preferred for AC and DC. AC can also use the grounding pin in the power cord, and DC can use the PSU lug or the power cord ground if present.
- Users should not attempt to make electrical ground connections by themselves but contact the appropriate inspection authority or electrician.
- Users should ensure for their own protection that the electrical ground connections of the power utility, telephone lines, and internal metallic water pipe system, if present, are connected. This precaution may be particularly important in rural areas.
- Before removing or installing components in our device, connect an electrostatic discharge (ESD) grounding strap to an ESD point and wrap and fasten the other end of the strap around your bare wrist. Failure to use an ESD ground strap could result in damage to the device.
- Install the device in accordance to the following local, national, and international electrical codes:
    - United States - National Fire Protection Association (NFPA 70) United States National Electrical Code.
    - Other countries - International Electromechanical Commission (IEC) 60364, Part 1 through Part 7.
    - Canada - Canadian Electrical Code, Part 1, CSA C22.1
- Evaluated to the TN Power System
- Suitable for installation in Information Technology Rooms in accordance to article 645 of the National Electrical Code and NFPA 75.
- Locate the emergency power-off switch for the room in which you are working so that if an electrical accident occurs, you can quickly turn off the power.
- Ensure that grounding surfaces are cleaned and brought to bright finish before grounding connections are made.
- Do not work alone if potentially hazardous conditions exist anywhere in your workplace.
- Never assume that power is disconnected from circuit. Always check the circuit before starting to work.

- Carefully look for possible hazards in your work area, such as moist floors, ungrounded power extension cords, and missing safety grounds.
- Operate the device within marked electrical ratings and product usage instructions
- To ensure that the device and peripheral equipment function safely and correctly, use the cables and connectors specified for the attached peripheral equipment, and ensure they are in good condition.
- Never install equipment that appears to be damaged.
- Before working on equipment that is connected to power lines, remove jewellery, including rings, necklaces, and watches. Metal objects heat up when connected to power and ground and can cause serious burns or can be welded to the terminals.
- AC-powered devices are shipped with a three-wire electrical cord with a grounding-type plug that fits only a grounding-type power outlet. Do not circumvent this safety feature. Equipment grounding must comply with local and national electrical codes.
- You must provide an external certified circuit breaker (2-pole or 4-pole circuit breaker based on your device) rated minimum 13 A/16 A/20 A in the building installation.
- The power-cord serves as the main disconnecting device for the AC-powered device. The socket outlet must be near the AC-powered device and be easily accessible.
- For the external DC PSM you must provide an external certified circuit breaker as disconnect device when you connect DC PSU to the system. This breaker must be rated to 40 /50A or as per country code.
- Before working on the device or near power supplies, unplug all the power cords from the device. All connections must be removed completely to remove power from the unit.

Laser LED Safety Guidelines

Juniper Networks devices are equipped with laser transmitters, which are considered a Class 1 or Class 1M Laser Products by the U.S. Food and Drug Administration and are evaluated as a Class 1 Laser product per EN 60825-2 requirements.

Battery Handling Warning

NOTE: Replacing a battery incorrectly might result in an explosion. Replace a battery only with the same or equivalent type recommended by the manufacturer. Dispose of used batteries according to the manufacturer's instructions.

System Label Rating

54VDC, 4.82A max. _+12V DC, 6.67A max.

POE rating : 54V 1.85A

Inter building Connection Statement

For connections outside the building where the equipment is installed, the following ports must be connected through an approved network termination unit with integral circuit protection - 10/100/1000 Ethernet including Power-over-Ethernet ports .

Connection to the DC Supply Source

Connect only to DC power source that complies with the safety extra-low voltage (SELV) requirements in IEC 60950 based safety standards/ES1 requirements in IEC 62368 based on safety standards.

Multiple Power Supplies Disconnection Warning

WARNING: The network device has more than one power supply connection. All connections must be removed completely to remove power from the unit completely.

Qualified Personnel Warning

WARNING: Only trained and qualified personnel should install or replace the device.

Restricted Access Warning



WARNING: This unit is intended for installation in restricted access areas. A restricted access area is an area to which access can be gained only by service personnel through the use of a special tool, lock and key, or other means of security, and which is controlled by the authority responsible for the location.

Waarschuwing Dit toestel is bedoeld voor installatie op plaatsen met beperkte toegang. Een plaats met beperkte toegang is een plaats waar toegang slechts door servicepersoneel verkregen kan worden door middel van een speciaal instrument, een slot en sleutel, of een ander veiligheidsmiddel, en welke beheerd wordt door de overheidsinstantie die verantwoordelijk is voor de locatie.

Varoitus Tämä laite on tarkoitettu asennettavaksi paikkaan, johon pääsy on rajoitettua. Paikka, johon pääsy on rajoitettua, tarkoittaa paikkaa, johon vain huoltohenkilöstö pääsee jonkin erikoistyökalun, lukkoon sopivan avaimen tai jonkin muun turvalaitteen avulla ja joka on paikasta vastuussa olevien toimivaltaisten henkilöiden valvoma.

Avertissement Cet appareil est à installer dans des zones d'accès réservé. Ces dernières sont des zones auxquelles seul le personnel de service peut accéder en utilisant un outil spécial, un mécanisme de verrouillage et une clé, ou tout autre moyen de sécurité. L'accès aux zones de sécurité est sous le contrôle de l'autorité responsable de l'emplacement.

Warnung Diese Einheit ist zur Installation in Bereichen mit beschränktem Zutritt vorgesehen. Ein Bereich mit beschränktem Zutritt ist ein Bereich, zu dem nur Wartungspersonal mit einem Spezialwerkzeugs, Schloß und Schlüssel oder anderer Sicherheitsvorkehrungen Zugang hat, und der von dem für die Anlage zuständigen Gremium kontrolliert wird.

Avvertenza Questa unità deve essere installata in un'area ad accesso limitato. Un'area ad accesso limitato è un'area accessibile solo a personale di assistenza tramite un'attrezzo speciale, lucchetto, o altri dispositivi di sicurezza, ed è controllata dall'autorità responsabile della zona.

Advarsel Denne enheten er laget for installasjon i områder med begrenset adgang. Et område med begrenset adgang gir kun adgang til servicepersonale som bruker et spesielt verktøy, lås og nøkkel, eller en annen sikkerhetsanordning, og det kontrolleres av den autoriteten som er ansvarlig for området.

Aviso Esta unidade foi concebida para instalação em áreas de acesso restrito. Uma área de acesso restrito é uma área à qual apenas tem acesso o pessoal de serviço autorizado,

que possua uma ferramenta, chave e fechadura especial, ou qualquer outra forma de segurança. Esta área é controlada pela autoridade responsável pelo local.

¡Atención! Esta unidad ha sido diseñada para instalarse en áreas de acceso restringido. Área de acceso restringido significa un área a la que solamente tiene acceso el personal de servicio mediante la utilización de una herramienta especial, cerradura con llave, o algún otro medio de seguridad, y que está bajo el control de la autoridad responsable del local.

Varning! Denna enhet är avsedd för installation i områden med begränsat tillträde. Ett område med begränsat tillträde får endast tillträdas av servicepersonal med ett speciellt verktyg, lås och nyckel, eller annan säkerhetsanordning, och kontrolleras av den auktoritet som ansvarar för området.

TN Power Warning



WARNING: The device is designed to work with a TN power system.

Hazardous Area Installation Warning



WARNING: To prevent the system from overheating, do not operate it in an area that exceeds the maximum recommended ambient temperature of 140 °F (60 °C). Statement 1047. Operating temperatures exceeding 60 °C are not covered by the product safety certifications and approvals. However, the switch can function in the installations under the environmental conditions listed in Table 28 on page 60.

General Electrical Safety Guidelines and Warnings



WARNING: Certain ports on the device are designed for use as intrabuilding (within-the-building) interfaces only (Type 2 or Type 4 ports as described in *GR-1089-CORE*) and require isolation from the exposed outside plant (OSP) cabling. To comply with NEBS (Network Equipment-Building System) requirements and protect against lightning surges and commercial power disturbances, the intrabuilding ports *must not* be metallically connected to interfaces that connect to the OSP or its wiring. The intrabuilding ports on the device are suitable for connection to intrabuilding or unexposed wiring or cabling only. The addition of primary protectors is not sufficient protection for connecting these interfaces metallically to OSP wiring.

Avertissement Certains ports de l'appareil sont destinés à un usage en intérieur uniquement (ports Type 2 ou Type 4 tels que décrits dans le document *GR-1089-CORE*) et doivent être isolés du câblage de l'installation extérieure exposée. Pour respecter les exigences NEBS et assurer une protection contre la foudre et les perturbations de tension secteur, les ports pour intérieur *ne doivent pas* être raccordés physiquement aux interfaces prévues pour la connexion à l'installation extérieure ou à son câblage. Les ports pour intérieur de l'appareil sont réservés au raccordement de câbles pour intérieur ou non exposés uniquement. L'ajout de protections ne constitue pas une précaution suffisante pour raccorder physiquement ces interfaces au câblage de l'installation extérieure.



CAUTION: Before removing or installing components of a device, connect an electrostatic discharge (ESD) grounding strap to an ESD point and wrap and fasten the other end of the strap around your bare wrist. Failure to use an ESD grounding strap could result in damage to the device.

Attention Avant de retirer ou d'installer des composants d'un appareil, raccordez un bracelet antistatique à un point de décharge électrostatique et fixez le bracelet à votre poignet nu. L'absence de port d'un bracelet antistatique pourrait provoquer des dégâts sur l'appareil.

- Install the device in compliance with the following local, national, and international electrical codes:
  - United States—National Fire Protection Association (NFPA 70), United States National Electrical Code.
  - Other countries—International Electromechanical Commission (IEC) 60364, Part 1 through Part 7.
  - Evaluated to the TN power system.

  - Canada—Canadian Electrical Code, Part 1, CSA C22.1.
  - Suitable for installation in Information Technology Rooms in accordance with Article 645 of the National Electrical Code and NFPA 75.

    Peut être installé dans des salles de matériel de traitement de l'information conformément à l'article 645 du National Electrical Code et à la NFPA 75.

- Locate the emergency power-off switch for the room in which you are working so that if an electrical accident occurs, you can quickly turn off the power.
- Make sure that you clean grounding surface and give them a bright finish before making grounding connections.
- Do not work alone if potentially hazardous conditions exist anywhere in your workspace.
- Never assume that power is disconnected from a circuit. Always check the circuit before starting to work.
- Carefully look for possible hazards in your work area, such as moist floors, ungrounded power extension cords, and missing safety grounds.
- Operate the device within marked electrical ratings and product usage instructions.
- To ensure that the device and peripheral equipment function safely and correctly, use the cables and connectors specified for the attached peripheral equipment, and make certain they are in good condition.

You can remove and replace many device components without powering off or disconnecting power to the device, as detailed elsewhere in the hardware documentation for this device. Never install equipment that appears to be damaged.

Definitions of Safety Warning Levels

The documentation uses the following levels of safety warnings (there are two *Warning* formats):



NOTE: You might find this information helpful in a particular situation, or you might overlook this important information if it was not highlighted in a Note.



CAUTION: You need to observe the specified guidelines to prevent minor injury or discomfort to you or severe damage to the device.

Attention Veillez à respecter les consignes indiquées pour éviter toute incommodité ou blessure légère, voire des dégâts graves pour l'appareil.



LASER WARNING: This symbol alerts you to the risk of personal injury from a laser.

Avertissement Ce symbole signale un risque de blessure provoquée par rayon laser.



WARNING: This symbol means danger. You are in a situation that could cause bodily injury. Before you work on any equipment, be aware of the hazards involved with electrical circuitry, and familiarize yourself with standard practices for preventing accidents.

Waarschuwing Dit waarschuwingssymbool betekent gevaar. U verkeert in een situatie die lichamelijk letsel kan veroorzaken. Voordat u aan enige apparatuur gaat werken, dient u zich bewust te zijn van de bij elektrische schakelingen betrokken risico's en dient u op de hoogte te zijn van standaard maatregelen om ongelukken te voorkomen.

Varoitus Tämä varoitusmerkki merkitsee vaaraa. Olet tilanteessa, joka voi johtaa ruumiinvammaan. Ennen kuin työskentelet minkään laitteiston parissa, ota selvää sähkökytkentöihin liittyvistä vaaroista ja tavanomaisista onnettomuuksien ehkäisykeinoista.

Avertissement Ce symbole d'avertissement indique un danger. Vous vous trouvez dans une situation pouvant causer des blessures ou des dommages corporels. Avant de travailler sur un équipement, soyez conscient des dangers posés par les circuits électriques et familiarisez-vous avec les procédures couramment utilisées pour éviter les accidents.

Warnung Dieses Warnsymbol bedeutet Gefahr. Sie befinden sich in einer Situation, die zu einer Körperverletzung führen könnte. Bevor Sie mit der Arbeit an irgendeinem Gerät beginnen, seien Sie sich der mit elektrischen Stromkreisen verbundenen Gefahren und der Standardpraktiken zur Vermeidung von Unfällen bewußt.

Avvertenza Questo simbolo di avvertenza indica un pericolo. La situazione potrebbe causare infortuni alle persone. Prima di lavorare su qualsiasi apparecchiatura, occorre conoscere i pericoli relativi ai circuiti elettrici ed essere al corrente delle pratiche standard per la prevenzione di incidenti.

Advarsel Dette varselsymbolet betyr fare. Du befinner deg i en situasjon som kan føre til personskade. Før du utfører arbeid på utstyr, må du vare oppmerksom på de faremomentene som elektriske kretser innebærer, samt gjøre deg kjent med vanlig praksis når det gjelder å unngå ulykker.

Aviso Este símbolo de aviso indica perigo. Encontra-se numa situação que lhe poderá causar danos físicos. Antes de começar a trabalhar com qualquer equipamento, familiarize-se com os perigos relacionados com circuitos eléctricos, e com quaisquer práticas comuns que possam prevenir possíveis acidentes.

¡Atención! Este símbolo de aviso significa peligro. Existe riesgo para su integridad física. Antes de manipular cualquier equipo, considerar los riesgos que entraña la corriente eléctrica y familiarizarse con los procedimientos estándar de prevención de accidentes.

Varning! Denna varningssymbol signalerar fara. Du befinner dig i en situation som kan leda till personskada. Innan du utför arbete på någon utrustning måste du vara medveten om farorna med elkretsar och känna till vanligt förfarande för att förebygga skador.

Qualified Personnel Warning



WARNING: Only trained and qualified personnel should install or replace the device.
Waarschuwing Installatie en reparaties mogen uitsluitend door getraind en bevoegd personeel uitgevoerd worden.

Varoitus Ainoastaan koulutettu ja pätevä henkilökunta saa asentaa tai vaihtaa tämän laitteen.

Avertissement Tout installation ou remplacement de l'appareil doit être réalisé par du personnel qualifié et compétent.

Warnung Gerät nur von geschultem, qualifiziertem Personal installieren oder auswechseln lassen.

Avvertenza Solo personale addestrato e qualificato deve essere autorizzato ad installare o sostituire questo apparecchio.

Advarsel Kun kvalifisert personell med riktig opplæring bør montere eller bytte ut dette utstyret.

Aviso Este equipamento deverá ser instalado ou substituído apenas por pessoal devidamente treinado e qualificado.

¡Atención! Estos equipos deben ser instalados y reemplazados exclusivamente por personal técnico adecuadamente preparado y capacitado.

Varning! Denna utrustning ska endast installeras och bytas ut av utbildad och kvalificerad personal.

Warning Statement for Norway and Sweden



WARNING: The equipment must be connected to an earthed mains socket-outlet.
Advarsel Apparatet skal kobles til en jordet stikkontakt.

Varning! Apparaten skall anslutas till jordat nätuttag.

Fire Safety Requirements

IN THIS SECTION

- Fire Suppression | **206**
- Fire Suppression Equipment | **206**

In the event of a fire emergency, the safety of people is the primary concern. You should establish procedures for protecting people in the event of a fire emergency, provide safety training, and properly provision fire-control equipment and fire extinguishers.

In addition, you should establish procedures to protect your equipment in the event of a fire emergency. Juniper Networks products should be installed in an environment suitable for electronic equipment. We recommend that fire suppression equipment be available in the event of a fire in the vicinity of the equipment and that all local fire, safety, and electrical codes and ordinances be observed when you install and operate your equipment.

Fire Suppression

In the event of an electrical hazard or an electrical fire, you should first turn power off to the equipment at the source. Then use a Type C fire extinguisher, which uses noncorrosive fire retardants, to extinguish the fire.

Fire Suppression Equipment

Type C fire extinguishers, which use noncorrosive fire retardants such as carbon dioxide and Halotron™, are most effective for suppressing electrical fires. Type C fire extinguishers displace oxygen from the point of combustion to eliminate the fire. For extinguishing fire on or around equipment that draws air from the environment for cooling, you should use this type of inert oxygen displacement extinguisher instead of an extinguisher that leaves residues on equipment.

Do not use multipurpose Type ABC chemical fire extinguishers (dry chemical fire extinguishers). The primary ingredient in these fire extinguishers is monoammonium phosphate, which is very sticky and difficult to clean. In addition, in the presence of minute amounts of moisture, monoammonium phosphate can become highly corrosive and corrodes most metals.

Any equipment in a room in which a chemical fire extinguisher has been discharged is subject to premature failure and unreliable operation. The equipment is considered to be irreparably damaged.

NOTE: To keep warranties effective, do not use a dry chemical fire extinguisher to control a fire at or near a Juniper Networks device. If a dry chemical fire extinguisher is used, the unit is no longer eligible for coverage under a service agreement.

We recommend that you dispose of any irreparably damaged equipment in an environmentally responsible manner.

Installation Instructions Warning

WARNING: Read the installation instructions before you connect the device to a power source.

Waarschuwing Raadpleeg de installatie-aanwijzingen voordat u het systeem met de voeding verbindt.

Varoitus Lue asennusohjeet ennen järjestelmän yhdistämistä virtalähteeseen.

Avertissement Avant de brancher le système sur la source d'alimentation, consulter les directives d'installation.

Warnung Lesen Sie die Installationsanweisungen, bevor Sie das System an die Stromquelle anschließen.

Avvertenza Consultare le istruzioni di installazione prima di collegare il sistema all'alimentatore.

Advarsel Les installasjonsinstruksjonene før systemet kobles til strømkilden.

Aviso Leia as instruções de instalação antes de ligar o sistema à sua fonte de energia.

¡Atención! Ver las instrucciones de instalación antes de conectar el sistema a la red de alimentación.

Varning! Läs installationsanvisningarna innan du kopplar systemet till dess strömförsörjningsenhet.

Chassis and Component Lifting Guidelines

- Before moving the device to a site, ensure that the site meets the power, environmental, and clearance requirements.
- Before lifting or moving the device, disconnect all external cables and wires.
- As when lifting any heavy object, ensure that your legs bear most of the weight rather than your back. Keep your knees bent and your back relatively straight. Do not twist your body as you lift. Balance the load evenly and be sure that your footing is firm.
- Use the following lifting guidelines to lift devices and components:
  - Up to 39.7 lb (18 kg): One person.
  - From 39.7 lb (18 kg) to 70.5 lb (32 kg): Two or more people.
  - From 70.5 lb (32 kg) to 121.2 lb (55 kg): Three or more people.

- Above 121.2 lb (55 kg): Use material handling systems (such as levers, slings, lifts, and so on). When this is not practical, engage specially trained persons or systems (such as riggers or movers).

NOTE: This equipment is intended for Pollution degree 2 industrial environment in Over voltage Category II application.

Restricted Access Warning

WARNING: This unit is intended for installation in restricted access areas. A restricted access area is an area to which access can be gained only by service personnel through the use of a special tool, lock and key, or other means of security, and which is controlled by the authority responsible for the location.

Waarschuwing Dit toestel is bedoeld voor installatie op plaatsen met beperkte toegang. Een plaats met beperkte toegang is een plaats waar toegang slechts door servicepersoneel verkregen kan worden door middel van een speciaal instrument, een slot en sleutel, of een ander veiligheidsmiddel, en welke beheerd wordt door de overheidsinstantie die verantwoordelijk is voor de locatie.

Varoitus Tämä laite on tarkoitettu asennettavaksi paikkaan, johon pääsy on rajoitettua. Paikka, johon pääsy on rajoitettua, tarkoittaa paikkaa, johon vain huoltohenkilöstö pääsee jonkin erikoistyökalun, lukkoon sopivan avaimen tai jonkin muun turvalaitteen avulla ja joka on paikasta vastuussa olevien toimivaltaisten henkilöiden valvoma.

Avertissement Cet appareil est à installer dans des zones d'accès réservé. Ces dernières sont des zones auxquelles seul le personnel de service peut accéder en utilisant un outil spécial, un mécanisme de verrouillage et une clé, ou tout autre moyen de sécurité. L'accès aux zones de sécurité est sous le contrôle de l'autorité responsable de l'emplacement.

Warnung Diese Einheit ist zur Installation in Bereichen mit beschränktem Zutritt vorgesehen. Ein Bereich mit beschränktem Zutritt ist ein Bereich, zu dem nur Wartungspersonal mit einem Spezialwerkzeugs, Schloß und Schlüssel oder anderer Sicherheitsvorkehrungen Zugang hat, und der von dem für die Anlage zuständigen Gremium kontrolliert wird.

Avvertenza Questa unità deve essere installata in un'area ad accesso limitato. Un'area ad accesso limitato è un'area accessibile solo a personale di assistenza tramite un'attrezzo

speciale, lucchetto, o altri dispositivi di sicurezza, ed è controllata dall'autorità responsabile della zona.

Advarsel Denne enheten er laget for installasjon i områder med begrenset adgang. Et område med begrenset adgang gir kun adgang til servicepersonale som bruker et spesielt verktøy, lås og nøkkel, eller en annen sikkerhetsanordning, og det kontrolleres av den autoriteten som er ansvarlig for området.

Aviso Esta unidade foi concebida para instalação em áreas de acesso restrito. Uma área de acesso restrito é uma área à qual apenas tem acesso o pessoal de serviço autorizado, que possua uma ferramenta, chave e fechadura especial, ou qualquer outra forma de segurança. Esta área é controlada pela autoridade responsável pelo local.

¡Atención! Esta unidad ha sido diseñada para instalarse en áreas de acceso restringido. Área de acceso restringido significa un área a la que solamente tiene acceso el personal de servicio mediante la utilización de una herramienta especial, cerradura con llave, o algún otro medio de seguridad, y que está bajo el control de la autoridad responsable del local.

Varning! Denna enhet är avsedd för installation i områden med begränsat tillträde. Ett område med begränsat tillträde får endast tillträdas av servicepersonal med ett speciellt verktyg, lås och nyckel, eller annan säkerhetsanordning, och kontrolleras av den auktoritet som ansvarar för området.

Ramp Warning

WARNING: When installing the device, do not use a ramp inclined at more than 10 degrees.
Waarschuwing Gebruik een oprijplaat niet onder een hoek van meer dan 10 graden.

Varoitus Älä käytä sellaista kaltevaa pintaa, jonka kaltevuus ylittää 10 astetta.

Avertissement Ne pas utiliser une rampe dont l'inclinaison est supérieure à 10 degrés.

Warnung Keine Rampen mit einer Neigung von mehr als 10 Grad verwenden.

Avvertenza Non usare una rampa con pendenza superiore a 10 gradi.

Advarsel Bruk aldri en rampe som heller mer enn 10 grader.

Aviso Não utilize uma rampa com uma inclinação superior a 10 graus.

¡Atención! No usar una rampa inclinada más de 10 grados.

Varning! Använd inte ramp med en lutning på mer än 10 grader.

Cabinet-Mounting Warnings

Ensure that the cabinet in which the device is installed is evenly and securely supported. Uneven mechanical loading could lead to a hazardous condition.



WARNING: To prevent bodily injury when mounting or servicing the device in a rack, take the following precautions to ensure that the system remains stable. The following directives help maintain your safety:

- Install the device in a cabinet that is secured to the building structure.
- Mount the device at the bottom of the cabinet if it is the only unit in the cabinet.
- When mounting the device on a partially filled cabinet, load the cabinet from the bottom to the top, with the heaviest component at the bottom of the cabinet.
- If the cabinet is provided with stabilizing equipment, install the stabilizers before mounting or servicing the device in the cabinet.

Waarschuwing Om lichamelijk letsel te voorkomen wanneer u dit toestel in een rek monteert of het daar een servicebeurt geeft, moet u speciale voorzorgsmaatregelen nemen om ervoor te zorgen dat het toestel stabiel blijft. De onderstaande richtlijnen worden verstrekt om uw veiligheid te verzekeren:

- De Juniper Networks switch moet in een stellage worden geïnstalleerd die aan een bouwsel is verankerd.
- Dit toestel dient onderaan in het rek gemonteerd te worden als het toestel het enige in het rek is.
- Wanneer u dit toestel in een gedeeltelijk gevuld rek monteert, dient u het rek van onderen naar boven te laden met het zwaarste onderdeel onderaan in het rek.

- Als het rek voorzien is van stabiliseringshulpmiddelen, dient u de stabilisatoren te monteren voordat u het toestel in het rek monteert of het daar een servicebeurt geeft.

Varoitus Kun laite asetetaan telineeseen tai huolletaan sen ollessa telineessä, on noudatettava erityisiä varotoimia järjestelmän vakavuuden säilyttämiseksi, jotta vältytään loukkaantumiselta. Noudata seuraavia turvallisuusohjeita:

- Juniper Networks switch on asennettava telineeseen, joka on kiinnitetty rakennukseen.
- Jos telineessä ei ole muita laitteita, aseta laite telineen alaosaan.
- Jos laite asetetaan osaksi täytettyyn telineeseen, aloita kuormittaminen sen alaosasta kaikkein raskaimmalla esineellä ja siirry sitten sen yläosaan.
- Jos telinettä varten on vakaimet, asenna ne ennen laitteen asettamista telineeseen tai sen huoltamista siinä.

Avertissement Pour éviter toute blessure corporelle pendant les opérations de montage ou de réparation de cette unité en casier, il convient de prendre des précautions spéciales afin de maintenir la stabilité du système. Les directives ci-dessous sont destinées à assurer la protection du personnel:

- Le rack sur lequel est monté le Juniper Networks switch doit être fixé à la structure du bâtiment.
- Si cette unité constitue la seule unité montée en casier, elle doit être placée dans le bas.
- Si cette unité est montée dans un casier partiellement rempli, charger le casier de bas en haut en plaçant l'élément le plus lourd dans le bas.
- Si le casier est équipé de dispositifs stabilisateurs, installer les stabilisateurs avant de monter ou de réparer l'unité en casier.

Warnung Zur Vermeidung von Körperverletzung beim Anbringen oder Warten dieser Einheit in einem Gestell müssen Sie besondere Vorkehrungen treffen, um sicherzustellen, daß das System stabil bleibt. Die folgenden Richtlinien sollen zur Gewährleistung Ihrer Sicherheit dienen:

- Der Juniper Networks switch muß in einem Gestell installiert werden, das in der Gebäudestruktur verankert ist.

- Wenn diese Einheit die einzige im Gestell ist, sollte sie unten im Gestell angebracht werden.
- Bei Anbringung dieser Einheit in einem zum Teil gefüllten Gestell ist das Gestell von unten nach oben zu laden, wobei das schwerste Bauteil unten im Gestell anzubringen ist.
- Wird das Gestell mit Stabilisierungszubehör geliefert, sind zuerst die Stabilisatoren zu installieren, bevor Sie die Einheit im Gestell anbringen oder sie warten.

Avvertenza Per evitare infortuni fisici durante il montaggio o la manutenzione di questa unità in un supporto, occorre osservare speciali precauzioni per garantire che il sistema rimanga stabile. Le seguenti direttive vengono fornite per garantire la sicurezza personale:

- Il Juniper Networks switch deve essere installato in un telaio, il quale deve essere fissato alla struttura dell'edificio.
- Questa unità deve venire montata sul fondo del supporto, se si tratta dell'unica unità da montare nel supporto.
- Quando questa unità viene montata in un supporto parzialmente pieno, caricare il supporto dal basso all'alto, con il componente più pesante sistemato sul fondo del supporto.
- Se il supporto è dotato di dispositivi stabilizzanti, installare tali dispositivi prima di montare o di procedere alla manutenzione dell'unità nel supporto.

Advarsel Unngå fysiske skader under montering eller reparasjonsarbeid på denne enheten når den befinner seg i et kabinett. Vær nøye med at systemet er stabilt. Følgende retningslinjer er gitt for å verne om sikkerheten:

- Juniper Networks switch må installeres i et stativ som er forankret til bygningsstrukturen.
- Denne enheten bør monteres nederst i kabinettet hvis dette er den eneste enheten i kabinettet.
- Ved montering av denne enheten i et kabinett som er delvis fylt, skal kabinettet lastes fra bunnen og opp med den tyngste komponenten nederst i kabinettet.
- Hvis kabinettet er utstyrt med stabiliseringsutstyr, skal stabilisatorene installeres før montering eller utføring av reparasjonsarbeid på enheten i kabinettet.

Aviso Para se prevenir contra danos corporais ao montar ou reparar esta unidade numa estante, deverá tomar precauções especiais para se certificar de que o sistema possui um suporte estável. As seguintes directrizes ajudá-lo-ão a efectuar o seu trabalho com segurança:

- O Juniper Networks switch deverá ser instalado numa prateleira fixa à estrutura do edificio.
- Esta unidade deverá ser montada na parte inferior da estante, caso seja esta a única unidade a ser montada.
- Ao montar esta unidade numa estante parcialmente ocupada, coloque os itens mais pesados na parte inferior da estante, arrumando-os de baixo para cima.
- Se a estante possuir um dispositivo de estabilização, instale-o antes de montar ou reparar a unidade.

¡Atención! Para evitar lesiones durante el montaje de este equipo sobre un bastidor, oeriormente durante su mantenimiento, se debe poner mucho cuidado en que el sistema quede bien estable. Para garantizar su seguridad, proceda según las siguientes instrucciones:

- El Juniper Networks switch debe instalarse en un bastidor fijado a la estructura del edificio.
- Colocar el equipo en la parte inferior del bastidor, cuando sea la única unidad en el mismo.
- Cuando este equipo se vaya a instalar en un bastidor parcialmente ocupado, comenzar la instalación desde la parte inferior hacia la superior colocando el equipo más pesado en la parte inferior.
- Si el bastidor dispone de dispositivos estabilizadores, instalar éstos antes de montar o proceder al mantenimiento del equipo instalado en el bastidor.

Varning! För att undvika kroppsskada när du installerar eller utför underhållsarbete på denna enhet på en ställning måste du vidta särskilda försiktighetsåtgärder för att försäkra dig om att systemet står stadigt. Följande riktlinjer ges för att trygga din säkerhet:

- Juniper Networks switch måste installeras i en ställning som är förankrad i byggnadens struktur.
- Om denna enhet är den enda enheten på ställningen skall den installeras längst ned på ställningen.

- Om denna enhet installeras på en delvis fylld ställning skall ställningen fyllas nedifrån och upp, med de tyngsta enheterna längst ned på ställningen.
- Om ställningen är försedd med stabiliseringsdon skall dessa monteras fast innan enheten installeras eller underhålls på ställningen.

Grounded Equipment Warning



WARNING: This device must be properly grounded at all times. Follow the instructions in this guide to properly ground the device to earth.

Waarschuwing Dit apparaat moet altijd goed geaard zijn. Volg de instructies in deze gids om het apparaat goed te aarden.

Varoitus Laitteen on oltava pysyvästi maadoitettu. Maadoita laite asianmukaisesti noudattamalla tämän oppaan ohjeita.

Avertissement L'appareil doit être correctement mis à la terre à tout moment. Suivez les instructions de ce guide pour correctement mettre l'appareil à la terre.

Warnung Das Gerät muss immer ordnungsgemäß geerdet sein. Befolgen Sie die Anweisungen in dieser Anleitung, um das Gerät ordnungsgemäß zu erden.

Avvertenza Questo dispositivo deve sempre disporre di una connessione a massa. Seguire le istruzioni indicate in questa guida per connettere correttamente il dispositivo a massa.

Advarsel Denne enheten på jordes skikkelig hele tiden. Følg instruksjonene i denne veiledningen for å jorde enheten.

Aviso Este equipamento deverá estar ligado à terra. Siga las instrucciones en esta guía para conectar correctamente este dispositivo a tierra.

¡Atención! Este dispositivo debe estar correctamente conectado a tierra en todo momento. Siga las instrucciones en esta guía para conectar correctamente este dispositivo a tierra.

Varning! Den här enheten måste vara ordentligt jordad. Följ instruktionerna i den här guiden för att jorda enheten ordentligt.

Radiation from Open Port Apertures Warning



LASER WARNING: Because invisible radiation might be emitted from the aperture of the port when no fiber cable is connected, avoid exposure to radiation and do not stare into open apertures.

Waarschuwing Aangezien onzichtbare straling vanuit de opening van de poort kan komen als er geen fiberkabel aangesloten is, dient blootstelling aan straling en het kijken in open openingen vermeden te worden.

Varoitus Koska portin aukosta voi emittoitua näkymätöntä säteilyä, kun kuitukaapelia ei ole kytkettynä, vältä säteilylle altistumista äläkä katso avoimiin aukkoihin.

Avertissement Des radiations invisibles à l'il nu pouvant traverser l'ouverture du port lorsqu'aucun câble en fibre optique n'y est connecté, il est recommandé de ne pas regarder fixement l'intérieur de ces ouvertures.

Warnung Aus der Port-Öffnung können unsichtbare Strahlen emittieren, wenn kein Glasfaserkabel angeschlossen ist. Vermeiden Sie es, sich den Strahlungen auszusetzen, und starren Sie nicht in die Öffnungen!

Avvertenza Quando i cavi in fibra non sono inseriti, radiazioni invisibili possono essere emesse attraverso l'apertura della porta. Evitate di esporvi alle radiazioni e non guardate direttamente nelle aperture.

Advarsel Unngå utsettelse for stråling, og stirr ikke inn i åpninger som er åpne, fordi usynlig stråling kan emiteres fra portens åpning når det ikke er tilkoblet en fiberkabel.

Aviso Dada a possibilidade de emissão de radiação invisível através do orifício da via de acesso, quando esta não tiver nenhum cabo de fibra conectado, deverá evitar an EXposição à radiação e não deverá olhar fixamente para orifícios que se encontrarem a descoberto.

¡Atención! Debido a que la apertura del puerto puede emitir radiación invisible cuando no existe un cable de fibra conectado, evite mirar directamente a las aperturas para no exponerse a la radiación.

Varning! Osynlig strålning kan avges från en portöppning utan ansluten fiberkabel och du bör därför undvika att bli utsatt för strålning genom att inte stirra in i oskyddade öppningar.

Laser and LED Safety Guidelines and Warnings

IN THIS SECTION

- General Laser Safety Guidelines | 216
- Class 1 Laser Product Warning | 217
- Class 1 LED Product Warning | 217
- Laser Beam Warning | 218

Juniper Networks devices are equipped with laser transmitters, which are considered a Class 1 Laser Product by the U.S. Food and Drug Administration and are evaluated as a Class 1 Laser Product per IEC/EN 60825-1 requirements.

Observe the following guidelines and warnings:

General Laser Safety Guidelines

When working around ports that support optical transceivers, observe the following safety guidelines to prevent eye injury:

- Do not look into unterminated ports or at fibers that connect to unknown sources.
- Do not examine unterminated optical ports with optical instruments.
- Avoid direct exposure to the beam.



LASER WARNING: Unterminated optical connectors can emit invisible laser radiation. The lens in the human eye focuses all the laser power on the retina, so focusing the eye directly on a laser source—even a low-power laser—could permanently damage the eye.

Avertissement Les connecteurs à fibre optique sans terminaison peuvent émettre un rayonnement laser invisible. Le cristallin de l'œil humain faisant converger toute la puissance du laser sur la rétine, toute focalisation directe de l'œil sur une source laser, — même de faible puissance—, peut entraîner des lésions oculaires irréversibles.

Class 1 Laser Product Warning



LASER WARNING: Class 1 laser product.
Waarschuwing Klasse-1 laser produkt.

Varoitus Luokan 1 lasertuote.

Avertissement Produit laser de classe I.

Warnung Laserprodukt der Klasse 1.

Avvertenza Prodotto laser di Classe 1.

Advarsel Laserprodukt av klasse 1.

Aviso Produto laser de classe 1.

¡Atención! Producto láser Clase I.

Varning! Laserprodukt av klass 1.

Class 1 LED Product Warning



LASER WARNING: Class 1 LED product.
Waarschuwing Klasse 1 LED-product.

Varoitus Luokan 1 valodiodituote.

Avertissement Alarme de produit LED Class I.

Warnung Class 1 LED-Produktwarnung.

Avvertenza Avvertenza prodotto LED di Classe 1.

Advarsel LED-produkt i klasse 1.

Aviso Produto de classe 1 com LED.

¡Atención! Aviso sobre producto LED de Clase 1.

Varning! Lysdiodprodukt av klass 1.

Laser Beam Warning



LASER WARNING: Do not stare into the laser beam or view it directly with optical instruments.
Waarschuwing Niet in de straal staren of hem rechtstreeks bekijken met optische instrumenten.

Varoitus Älä katso säteeseen äläkä tarkastele sitä suoraan optisen laitteen avulla.

Avertissement Ne pas fixer le faisceau des yeux, ni l'observer directement à l'aide d'instruments optiques.

Warnung Nicht direkt in den Strahl blicken und ihn nicht direkt mit optischen Geräten prüfen.

Avvertenza Non fissare il raggio con gli occhi né usare strumenti ottici per osservarlo direttamente.

Advarsel Stirr eller se ikke direkte p strlen med optiske instrumenter.

Aviso Não olhe fixamente para o raio, nem olhe para ele directamente com instrumentos ópticos.

¡Atención! No mirar fijamente el haz ni observarlo directamente con instrumentos ópticos.

Varning! Rikta inte blicken in mot strålen och titta inte direkt på den genom optiska instrument.

Maintenance and Operational Safety Guidelines and Warnings

IN THIS SECTION

- Battery Handling Warning | **219**
- Jewelry Removal Warning | **220**
- Lightning Activity Warning | **221**

Operating Temperature Warning | 222
Product Disposal Warning | 223

While performing the maintenance activities for devices, observe the following guidelines and warnings:

Battery Handling Warning



WARNING: Replacing a battery incorrectly might result in an explosion. Replace a battery only with the same or equivalent type recommended by the manufacturer. Dispose of used batteries according to the manufacturer's instructions.

Waarschuwing Er is ontploffingsgevaar als de batterij verkeerd vervangen wordt. Vervang de batterij slechts met hetzelfde of een equivalent type dat door de fabrikant aanbevolen is. Gebruikte batterijen dienen overeenkomstig fabrieksvoorschriften weggeworpen te worden.

Varoitus Räjähdyksen vaara, jos akku on vaihdettu väärään akkuun. Käytä vaihtamiseen ainoastaan saman- tai vastaavantyyppistä akkua, joka on valmistajan suosittelema. Hävitä käytetyt akut valmistajan ohjeiden mukaan.

Avertissement Danger d'explosion si la pile n'est pas remplacée correctement. Ne la remplacer que par une pile de type semblable ou équivalent, recommandée par le fabricant. Jeter les piles usagées conformément aux instructions du fabricant.

Warnung Bei Einsetzen einer falschen Batterie besteht Explosionsgefahr. Ersetzen Sie die Batterie nur durch den gleichen oder vom Hersteller empfohlenen Batterietyp. Entsorgen Sie die benutzten Batterien nach den Anweisungen des Herstellers.

Advarsel Det kan være fare for eksplosjon hvis batteriet skiftes på feil måte. Skift kun med samme eller tilsvarende type som er anbefalt av produsenten. Kasser brukte batterier i henhold til produsentens instruksjoner.

Avvertenza Pericolo di esplosione se la batteria non è installata correttamente. Sostituire solo con una di tipo uguale o equivalente, consigliata dal produttore. Eliminare le batterie usate secondo le istruzioni del produttore.

Aviso Existe perigo de explosão se a bateria for substituída incorrectamente. Substitua a bateria por uma bateria igual ou de um tipo equivalente recomendado pelo fabricante. Destrua as baterias usadas conforme as instruções do fabricante.

¡Atención! Existe peligro de explosión si la batería se reemplaza de manera incorrecta. Reemplazar la baterían EXclusivamente con el mismo tipo o el equivalente recomendado por el fabricante. Desechar las baterías gastadas según las instrucciones del fabricante.

Varning! Explosionsfara vid felaktigt batteribyte. Ersätt endast batteriet med samma batterityp som rekommenderas av tillverkaren eller motsvarande. Följ tillverkarens anvisningar vid kassering av använda batterier.

Jewelry Removal Warning



WARNING: Before working on equipment that is connected to power lines, remove jewelry, including rings, necklaces, and watches. Metal objects heat up when connected to power and ground and can cause serious burns or can be welded to the terminals.

Waarschuwing Alvorens aan apparatuur te werken die met elektrische leidingen is verbonden, sieraden (inclusief ringen, kettingen en horloges) verwijderen. Metalen voorwerpen worden warm wanneer ze met stroom en aarde zijn verbonden, en kunnen ernstige brandwonden veroorzaken of het metalen voorwerp aan de aansluitklemmen lassen.

Varoitus Ennen kuin työskentelet voimavirtajohtoihin kytkettyjen laitteiden parissa, ota pois kaikki korut (sormukset, kaulakorut ja kellot mukaan lukien). Metalliesineet kuumenevat, kun ne ovat yhteydessä sähkövirran ja maan kanssa, ja ne voivat aiheuttaa vakavia palovammoja tai hitsata metalliesineet kiinni liitäntänapoihin.

Avertissement Avant d'accéder à cet équipement connecté aux lignes électriques, ôter tout bijou (anneaux, colliers et montres compris). Lorsqu'ils sont branchés à l'alimentation et reliés à la terre, les objets métalliques chauffent, ce qui peut provoquer des blessures graves ou souder l'objet métallique aux bornes.

Warnung Vor der Arbeit an Geräten, die an das Netz angeschlossen sind, jeglichen Schmuck (einschließlich Ringe, Ketten und Uhren) abnehmen. Metallgegenstände erhitzen sich, wenn sie an das Netz und die Erde angeschlossen werden, und können schwere Verbrennungen verursachen oder an die Anschlußklemmen angeschweißt werden.

Avvertenza Prima di intervenire su apparecchiature collegate alle linee di alimentazione, togliersi qualsiasi monile (inclusi anelli, collane, braccialetti ed orologi). Gli oggetti metallici si riscaldano quando sono collegati tra punti di alimentazione e massa: possono causare ustioni gravi oppure il metallo può saldarsi ai terminali.

Advarsel Fjern alle smykker (inkludert ringer, halskjeder og klokker) før du skal arbeide på utstyr som er koblet til kraftledninger. Metallgjenstander som er koblet til kraftledninger og jord blir svært varme og kan forårsake alvorlige brannskader eller smelte fast til polene.

Aviso Antes de trabalhar em equipamento que esteja ligado a linhas de corrente, retire todas as jóias que estiver a usar (incluindo anéis, fios e relógios). Os objectos metálicos aquecerão em contacto com a corrente e em contacto com a ligação à terra, podendo causar queimaduras graves ou ficarem soldados aos terminais.

¡Atención! Antes de operar sobre equipos conectados a líneas de alimentación, quitarse las joyas (incluidos anillos, collares y relojes). Los objetos de metal se calientan cuando se conectan a la alimentación y a tierra, lo que puede ocasionar quemaduras graves o que los objetos metálicos queden soldados a los bornes.

Varning! Tag av alla smycken (inklusive ringar, halsband och armbandsur) innan du arbetar på utrustning som är kopplad till kraftledningar. Metallobjekt hettas upp när de kopplas ihop med ström och jord och kan förorsaka allvarliga brännskador; metallobjekt kan också sammansvetsas med kontakterna.

Lightning Activity Warning



WARNING: Do not work on the system or connect or disconnect cables during periods of lightning activity.

Waarschuwing Tijdens onweer dat gepaard gaat met bliksem, dient u niet aan het systeem te werken of kabels aan te sluiten of te ontkoppelen.

Varoitus Älä työskentele järjestelmän parissa äläkä yhdistä tai irrota kaapeleita ukkosilmalla.

Avertissement Ne pas travailler sur le système ni brancher ou débrancher les câbles pendant un orage.

Warnung Arbeiten Sie nicht am System und schließen Sie keine Kabel an bzw. trennen Sie keine ab, wenn es gewittert.

Avvertenza Non lavorare sul sistema o collegare oppure scollegare i cavi durante un temporale con fulmini.

Advarsel Utfør aldri arbeid på systemet, eller koble kabler til eller fra systemet når det tordner eller lyner.

Aviso Não trabalhe no sistema ou ligue e desligue cabos durante períodos de mau tempo (trovoada).

¡Atención! No operar el sistema ni conectar o desconectar cables durante el transcurso de descargas eléctricas en la atmósfera.

Varning! Vid åska skall du aldrig utföra arbete på systemet eller ansluta eller koppla loss kablar.

Operating Temperature Warning



WARNING: To prevent the device from overheating, do not operate it in an area that exceeds the maximum recommended ambient temperature. To prevent airflow restriction, allow at least 6 in. (15.2 cm) of clearance around the ventilation openings.

Waarschuwing Om te voorkomen dat welke switch van de Juniper Networks router dan ook oververhit raakt, dient u deze niet te bedienen op een plaats waar de maximale aanbevolen omgevingstemperatuur van 40° C wordt overschreden. Om te voorkomen dat de luchtstroom wordt beperkt, dient er minstens 15,2 cm speling rond de ventilatie-openingen te zijn.

Varoitus Ettei Juniper Networks switch-sarjan reititin ylikuumentuisi, sitä ei saa käyttää tilassa, jonka lämpötila ylittää korkeimman suositellun ympäristölämpötilan 40° C. Ettei ilmanvaihto estyisi, tuuletusaukkojen ympärille on jätettävä ainakin 15,2 cm tilaa.

Avertissement Pour éviter toute surchauffe des routeurs de la gamme Juniper Networks switch, ne l'utilisez pas dans une zone où la température ambiante est supérieure à 40° C. Pour permettre un flot d'air constant, dégagez un espace d'au moins 15,2 cm autour des ouvertures de ventilations.

Warnung Um einen Router der switch vor Überhitzung zu schützen, darf dieser nicht in einer Gegend betrieben werden, in der die Umgebungstemperatur das empfohlene

Maximum von 40° C überschreitet. Um Lüftungsverschluß zu verhindern, achten Sie darauf, daß mindestens 15,2 cm lichter Raum um die Lüftungsöffnungen herum frei bleibt.

Avvertenza Per evitare il surriscaldamento dei switch, non adoperateli in un locale che ecceda la temperatura ambientale massima di 40° C. Per evitare che la circolazione dell'aria sia impedita, lasciate uno spazio di almeno 15.2 cm di fronte alle aperture delle ventole.

Advarsel Unngå overoppheting av eventuelle rutere i Juniper Networks switch Disse skal ikke brukes på steder der den anbefalte maksimale omgivelsestemperaturen overstiger 40° C (104° F). Sørg for at klaringen rundt lufteåpningene er minst 15,2 cm (6 tommer) for å forhindre nedsatt luftsirkulasjon.

Aviso Para evitar o sobreaquecimento do encaminhador Juniper Networks switch, não utilize este equipamento numa área que exceda a temperatura máxima recomendada de 40° C. Para evitar a restrição à circulação de ar, deixe pelo menos um espaço de 15,2 cm à volta das aberturas de ventilação.

¡Atención! Para impedir que un encaminador de la serie Juniper Networks switch se recaliente, no lo haga funcionar en un área en la que se supere la temperatura ambiente máxima recomendada de 40° C. Para impedir la restricción de la entrada de aire, deje un espacio mínimo de 15,2 cm alrededor de las aperturas para ventilación.

Varning! Förhindra att en Juniper Networks switch överhettas genom att inte använda den i ett område där den maximalt rekommenderade omgivningstemperaturen på 40° C överskrids. Förhindra att luftcirkulationen inskränks genom att se till att det finns fritt utrymme på minst 15,2 cm omkring ventilationsöppningarna.

Product Disposal Warning



WARNING: Disposal of this device must be handled according to all national laws and regulations.

Waarschuwing Dit produkt dient volgens alle landelijke wetten en voorschriften te worden afgedankt.

Varoitus Tämän tuotteen lopullisesta hävittämisestä tulee huolehtia kaikkia valtakunnallisia lakeja ja säännöksiä noudattaen.

Avertissement La mise au rebut définitive de ce produit doit être effectuée conformément à toutes les lois et réglementations en vigueur.

Warnung Dieses Produkt muß den geltenden Gesetzen und Vorschriften entsprechend entsorgt werden.

Avvertenza L'eliminazione finale di questo prodotto deve essere eseguita osservando le normative italiane vigenti in materia

Advarsel Endelig disponering av dette produktet må skje i henhold til nasjonale lover og forskrifter.

Aviso A descartagem final deste produto deverá ser efectuada de acordo com os regulamentos e a legislação nacional.

¡Atención! El desecho final de este producto debe realizarse según todas las leyes y regulaciones nacionales

Varning! Slutlig kassering av denna produkt bör skötas i enlighet med landets alla lagar och föreskrifter.

Action to Take After an Electrical Accident

If an electrical accident results in an injury, take the following actions in this order:

1. Use caution. Be aware of potentially hazardous conditions that could cause further injury.
2. Disconnect power from the device.
3. If possible, send another person to get medical aid. Otherwise, assess the condition of the victim, and then call for help.

Prevention of Electrostatic Discharge Damage

Device components that are shipped in antistatic bags are sensitive to damage from static electricity. Some components can be impaired by voltages as low as 30 V. You can easily generate potentially damaging static voltages whenever you handle plastic or foam packing material or if you move components across plastic or carpets. Observe the following guidelines to minimize the potential for electrostatic discharge (ESD) damage, which can cause intermittent or complete component failures:

- Always use an ESD wrist strap when you are handling components that are subject to ESD damage, and make sure that it is in direct contact with your skin.

  If a grounding strap is not available, hold the component in its antistatic bag (see No Link Title) in one hand and touch the exposed, bare metal of the device with the other hand immediately before inserting the component into the device.

  > **WARNING**: For safety, periodically check the resistance value of the ESD grounding strap. The measurement must be in the range 1 through 10 Mohms.
  >
  > **Avertissement** Par mesure de sécurité, vérifiez régulièrement la résistance du bracelet antistatique. Cette valeur doit être comprise entre 1 et 10 mégohms (Mohms).

- When handling any component that is subject to ESD damage and that is removed from the device, make sure the equipment end of your ESD wrist strap is attached to the ESD point on the chassis.

  If no grounding strap is available, touch the exposed, bare metal of the device to ground yourself before handling the component.

- Avoid contact between the component that is subject to ESD damage and your clothing. ESD voltages emitted from clothing can damage components.

- When removing or installing a component that is subject to ESD damage, always place it component-side up on an antistatic surface, in an antistatic card rack, or in an antistatic bag (see No Link Title). If you are returning a component, place it in an antistatic bag before packing it.

Figure 77: Placing a Component into an Antistatic Bag

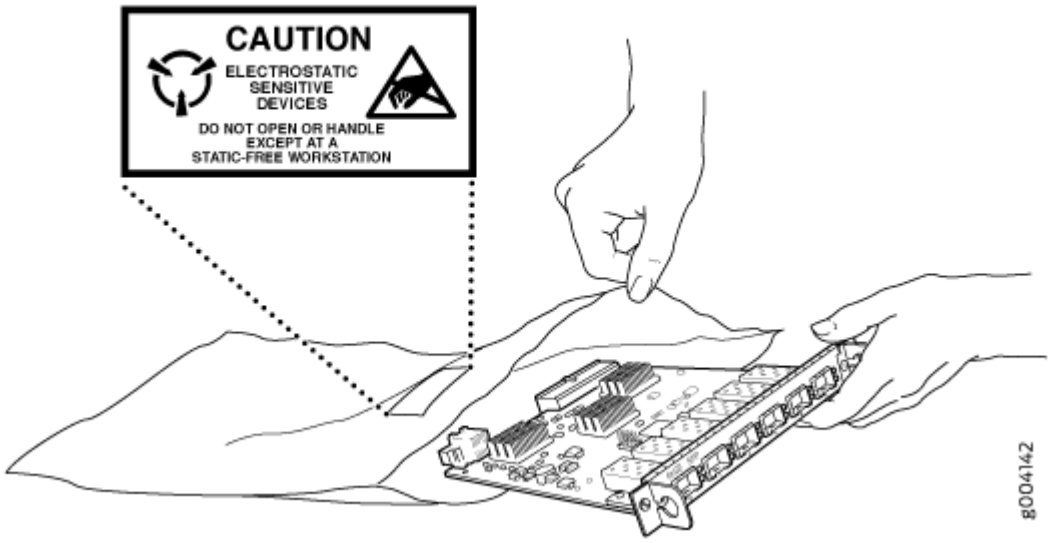

CAUTION: ANSI/TIA/EIA-568 cables such as Category 5e and Category 6 can get electrostatically charged. To dissipate this charge, always ground the cables to a suitable and safe earth ground before connecting them to the system.

Attention Les câbles ANSI/TIA/EIA-568, par exemple Cat 5e et Cat 6, peuvent emmagasiner des charges électrostatiques. Pour évacuer ces charges, reliez toujours les câbles à une prise de terre adaptée avant de les raccorder au système.

Compliance Standards for EX4100-H Switches

This topic applies to hardware devices in the EX Series product family, which includes EX Series switches, the EX Series Redundant Power System (RPS), and the XRE200 External Routing Engine.

These hardware devices comply with the following standards:

- Safety
  - IEC 62368-1:2014 (All country deviations): 2nd Edition: CB Scheme
  - IEC 62368-1:2018 (All country deviations): 3rd Edition: CB Scheme
  - EN 62368-1:2014+A11:2017, EN IEC 62368-1:2020+A11:2020

- BS EN 62368-1:2014+A11:2017, BS EN IEC 62368-1:2020+A11:2020
- UL 62368-1:2019
- CSA C22.2 No. 62368-1:19
- UL 60950-1:2007
- CAN/CSA C22.2 No. 60950-1-07+ A1:2011+A2:2014
- EN 62368-1:2014+A11:2017,
- BS EN IEC 62368-1:2020+A11:2020
- UL 62368-1:2019
- CSA C22.2 No. 62368-1:19
- CAN/CSA C22.2 No. 60950-1-07+ A1:2011+A2:2014

- EMC
  - IEEE 1613 and IEEE 1613.1
  - IEC 61850-3
  - IEC 61850-3 with IEC 61000-6-5
  - EN 50121-4
  - FCC 47 CFR Part 15 Class A
  - ICES-003 / ICES-GEN
  - BS EN 55032
  - BS EN 55035
  - BS EN 61000 Series
  - EN 300 386 V1.6.1
  - EN 300 386 V2.2.1
  - BS EN 300 386
  - EN 55032
  - CISPR 32
  - EN 55035

    - CISPR 35
    - IEC/EN 61000 Series
    - IEC/EN 61000-3-2
    - IEC/EN 61000-3-3
    - AS/NZS CISPR 32
    - VCCI-CISPR 32
    - BSMI CNS 15936
    - KS C 9835
    - KS C 9832
    - KS C 9610
    - NEBS GR-1089-CORE, Issue 8
    - British Telecommunications (BT) GS7
    - Deutsche Telekom (DT) 1 TR 9
- Compliance Statements for NEBS
    - The equipment is suitable for installation as part of the Common Bonding Network (CBN).
    - The equipment is suitable for installation in locations where the National Electrical Code (NEC) applies.
    - The battery return connection is to be treated as an isolated DC return (that is, DC-I), as defined in GR-1089-CORE.
    - You must provision a readily accessible device outside of the equipment to disconnect power. The device must also be rated based on local electrical code practice.
- Compliance Statement for Argentina
    - EQUIPO DE USO IDÓNEO.

Compliance Statements for EMC Requirements for EX Series Switches

IN THIS SECTION

- Canada | 229
- Taiwan | 230
- European Community | 230
- Israel | 231
- Japan | 231
- Korea | 231
- United States | 232
- FCC Part 15 Statement | 232

This topic applies to hardware devices in the EX Series product family, which includes EX Series switches, the EX Series Redundant Power System (RPS), and the XRE200 External Routing Engine.

This topic describes the EMC requirements for these hardware devices.

Canada

This Class A digital apparatus complies with Canadian ICES-003.

Cet appareil numérique de la classe A est conforme à la norme NMB-003 du Canada.

The Industry Canada label identifies certified equipment. This certification means that the equipment meets certain telecommunications network protective, operational, and safety requirements. Industry Canada does not guarantee the equipment will operate to the users' satisfaction.

Before installing this equipment, users should ensure that it is permissible to connect the equipment to the facilities of the local telecommunications company. The equipment must also be installed using an acceptable method of connection. In some cases, the inside wiring associated with a single line individual service can be extended by means of a certified connector assembly. The customer should be

aware that compliance with the above conditions might not prevent degradation of service in some situations.

Repairs to certified equipment should be made by an authorized Canadian maintenance facility designated by the supplier. Any repairs or alterations made by the user to this equipment, or equipment malfunctions, might give the telecommunications company cause to request the user to disconnect the equipment.



CAUTION: Users should not attempt to make electrical ground connections by themselves, but should contact the appropriate inspection authority or an electrician, as appropriate.

Users should ensure for their own protection that the electrical ground connections of the power utility, telephone lines, and internal metallic water pipe system, if present, are connected together. This precaution might be particularly important in rural areas.

Taiwan

此為甲類資訊技術設備。於一般家居環境使用時，本設備可能導致射頻干擾，用□請採取相應措施。

The preceding translates as follows:

This is a Class A device. In a domestic environment, this device might cause radio interference, in which case the user needs to take adequate measures.

European Community

This is a Class A device. In a domestic environment this device might cause radio interference, in which case the user needs to take adequate measures.

Israel

אזהרה

מוצר זה הוא מוצר Class A.
בסביבה ביתית,מוצר זה עלול לגרום הפרעות בתדר רדיו,ובמקרה זה ,המשתמש עשוי להידרש לנקוט אמצעים מתאימים.

The preceding translates as follows:

Warning: This product is Class A. In residential environments, the product may cause radio interference, and in such a situation, the user may be required to take adequate measures.

Japan

この装置は、クラス A 情報技術装置です。この装置を家庭環境で使用すると電波妨害を引き起こすことがあります。この場合には使用者が適切な対策を講ずるよう要求されることがあります。 VCCI-A

The preceding translates as follows:

This is a Class A device. In a domestic environment this device might cause radio interference, in which case the user needs to take adequate measures.

VCCI-A

Korea

이 기기는 업무용(A급) 전자파적합기기로서 판매자 또는 사용자는 이 점을 주의하시기 바라며, 가정외의 지역에서 사용하는 것을 목적으로 합니다.

Korean Class A Warning g040913

The preceding translates as follows:

This equipment is Industrial (Class A) electromagnetic wave suitability equipment and seller or user should take notice of it, and this equipment is to be used in the places except for home

United States

The device has been tested and found to comply with the limits for a Class A digital device, pursuant to Part 15 of the FCC Rules. These limits are designed to provide reasonable protection against harmful interference when the equipment is operated in a commercial environment. This equipment generates, uses, and can radiate radio frequency energy and, if not installed and used in accordance with the instruction manual, might cause harmful interference to radio communications. Operation of this equipment in a residential area is likely to cause harmful interference, in which case users need to correct the interference at their own expense.

FCC Part 15 Statement

This equipment has been tested and found to comply with the limits for a Class A digital device pursuant to Part 15 of the FCC Rules. These limits are designed to provide reasonable protection against harmful interference in a residential installation. This equipment generates, uses, and can radiate radio frequency energy and, if not installed and used in accordance with the instructions, might cause harmful interference to radio communications. However, there is no guarantee that interference will not occur in a particular installation.

If this equipment does cause harmful interference to radio or television reception, which can be determined by turning the equipment off and on, the user is encouraged to try and correct the interference by one or more of the following measures:

- Reorient or relocate the receiving antenna.
- Increase the separation between the equipment and the receiver.
- Connect the equipment into an outlet on a circuit different from that to which the receiver is connected.
- Consult the dealer or an experienced radio or TV technician for help.

Statements of Volatility for Juniper Network Devices

A *statement of volatility (SoV)*—sometimes known as *letter of volatility (LoV)*—identifies the volatile and non-volatile storage components in Juniper Networks devices, and describes how to remove non-volatile storage components from the device.

NOTE: Individual FRUs do not have separate SoV or LoV documents. They are covered in the SoV or LoV of the Juniper Networks device in which they are installed.

NOTE: Statements of volatility are not available for all Juniper Networks devices.

CTP Series:

- CTP150
- CTP2000

EX Series:

- EX2200 and EX2200-C
- EX2300-24P, EX2300-24T, and EX2300-24T-DC
- EX2300-48P and EX2300-48T
- EX2300-C
- EX3300
- EX3400-24P, EX3400-24T, EX3400-24T-DC
- EX3400-48P, EX3400-48T, EX3400-48T-AFI
- EX4200
- EX4300
- EX4300-48MP
- EX4400

  1. EX4400-24T

2. EX4400-24P
3. EX4400-24MP
4. EX4400-24X
5. EX4400-48T
6. EX4400-48P
7. EX4400-48MP
8. EX4400-48F

- EX4500
- EX4550
- EX4600
- EX8200
- EX9251
- EX9253
- XRE200 External Routing Engine

LN Series:

- LN1000–CC

MX Series:

- M7i
- M7i Compact Forwarding Engine Board (CFEB)
- M40e and M10i
- M320
- MX5, MX10, MX40, and MX80
- MX104
- MX204
- MX304
- MX240, MX480, and MX960

- MX10003
- RE-A-2000 Route Engine
- RE-S-X6-64G Routing Engine

NFX Series:

- NFX250

QFX Series:

- QFX3008-I
- QFX3100
- QFX3500
- QFX3600
- QFX5100-24Q
- QFX5100-48S
- QFX5100-48T
- QFX5110-32Q
- QFX5110-48S
- QFX5120
  1. QFX5120-32C
  2. QFX5120-48T
  3. QFX5120-48Y
  4. QFX5120-48YM
- QFX5200
- QFX5200-32C
- QFX10008 and QFX10016

SRX Series:

- SRX100
- SRX110

- SRX210B
- SRX210H-POE
- SRX210H-P-MGW
- SRX220
- SRX240H
- SRX240H-POE
- SRX300
- SRX320
- SRX340 and SRX345
- SRX380
- SRX550
- SRX650
- SRX1400
- SRX1500
- SRX3400 and SRX3600
- SRX4200
- SRX4600
- SRX5400, SRX5600, and SRX5800
- SRX-MP-1SERIAL
- SSG-520M

T Series:

- RE-A-2000 Route Engine