QuickStart Guide

FortiAnalyzer 3100G

FAZ-3100G

This guide covers: FAZ-3100G

May 2, 2025

Copyright © 2025 Fortinet, Inc. All rights reserved. Fortinet®, FortiGate®, FortiCare® and FortiGuard®, and certain other marks are registered trademarks of Fortinet, Inc., and other Fortinet names herein may also be registered and/or common law trademarks of Fortinet. All other product or company names may be trademarks of their respective owners. Performance and other metrics contained herein were attained in internal lab tests under ideal conditions, and actual performance and other results may vary. Network variables, different network environments and other conditions may affect performance results. Nothing herein represents any binding commitment by Fortinet, and Fortinet disclaims all warranties, whether express or implied, except to the extent Fortinet enters a binding written contract, signed by Fortinet's SVP Legal and above, with a purchaser that expressly warrants that the identified product will perform according to certain expressly-identified performance metrics and, in such event, only the specific performance metrics expressly identified in such binding written contract shall be binding on Fortinet. For absolute clarity, any such warranty will be limited to performance in the same ideal conditions as in Fortinet's internal lab tests. Fortinet disclaims in full any covenants, representations, and guarantees pursuant hereto, whether express or implied. Fortinet reserves the right to change, modify, transfer, or otherwise revise this publication without notice, and the most current version of the publication shall be applicable.

For Product License Agreement / EULA and Warranty Terms, visit https://www.fortinet.com/content/dam/fortinet/assets/legal/EULA.pdf

Before you begin

Register your device to access FortiGuard updates, cloud management, firmware upgrades, technical support and warranty coverage.

https://support.fortinet.com

The Essentials

Default Logins

https://192.168.1.99
Username: ***admin***
Password**: leave blank**

Fortinet Documents Library

For a detailed Administration Guide, up-to-date Hardware documentation and Reference Manuals, visit https://docs.fortinet.com/

Customer Service

For contracts, licensing, product registration and account management, contact FortiCare Support at https://www.fortinet.com/support/contact

Technical Support

To access our Resource Center, Professional Services and Technical Support Services, visit https://www.fortinet.com/support

Thank you for choosing Fortinet

Package Contents

FortiAnalyzer 3100G
FAZ-3100G



QuickStart Guide



FortiAnalyzer Device



2x AC Power Cables



1x Ethernet Cable



1x Console Cable
(DB9 to DB9)

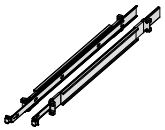

2x Sliding Rails

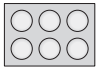

6x Rubber Feet



16x Storage Devices

Setup Options

GUI

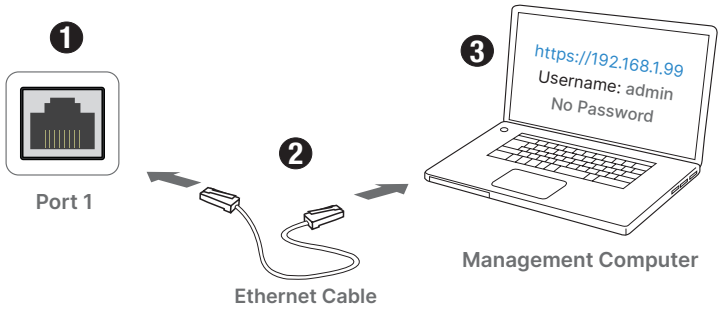

Note: For static IP configuration, use 192.168.1.1 with subnet mask 255.255.255.0

CLI

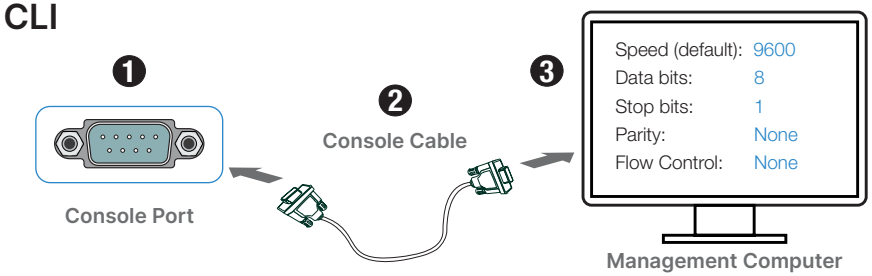

Note: For a detailed CLI guide, visit https://docs.fortinet.com

SFP Modules

Installation

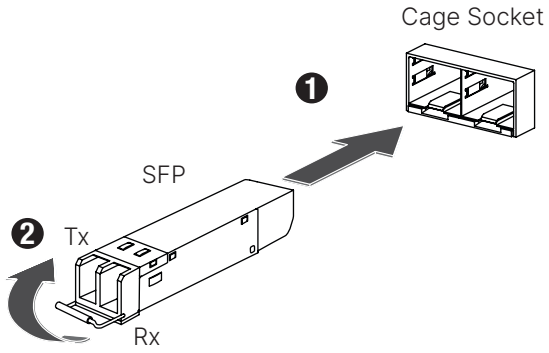

Removal

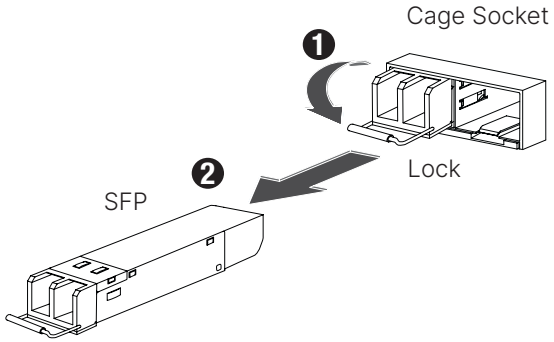

Rack Installation

Follow three steps to install the device into the rack:

A. Attach the inner rails to the device
B. Install the outer rails on a rack
C. Install the device into the rack

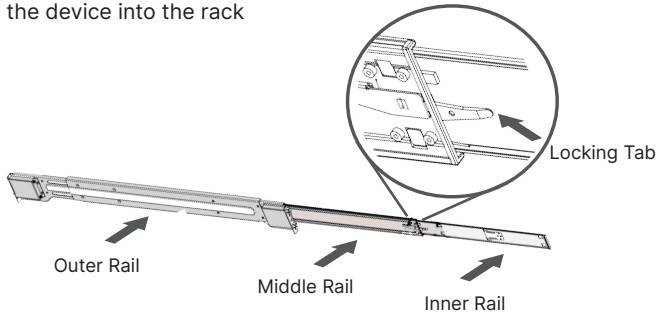

A. Attach the inner rails

1. Place the inner rail against the side of the device, ensuring that the hooks on the side of the device align with the holes in the rail.
2. Slide the rail towards the front of the device until the inner rail metal clip clicks into the locked position.
3. Repeat steps 1 - 2 for the remaining rail.

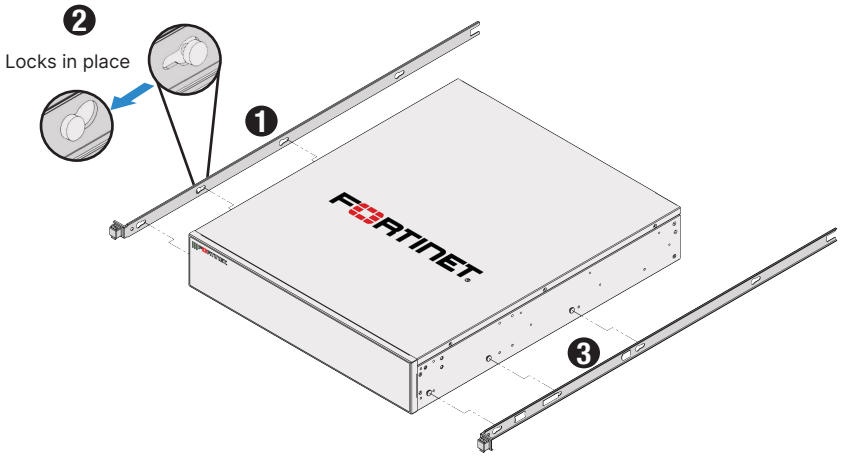

Note: Please see the following video for visual instructions:
https://video.fortinet.com/latest/rack-mount-sliding-rail-installation

B. Attach the outer rails

1. Align the front of the outer rail with the front of the rack.
2. Push the mounting pins into the rack post holes.
3. Pull out the back of the outer rail to adjust its length until it fits in the rack.
4. Ensure the rail is level, then push the rear mounting pins into the post holes.
5. Pull the securing plate over the rack post and close to lock the pins in place.
6. Repeat steps 1 - 5 for the second rail, ensuring that it is at the same height.

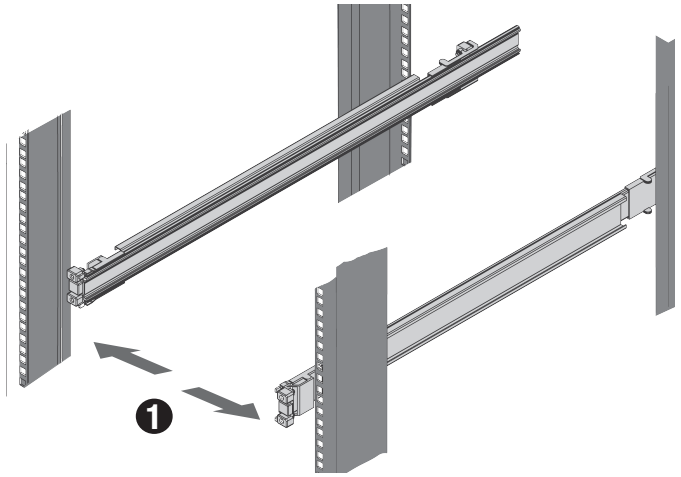

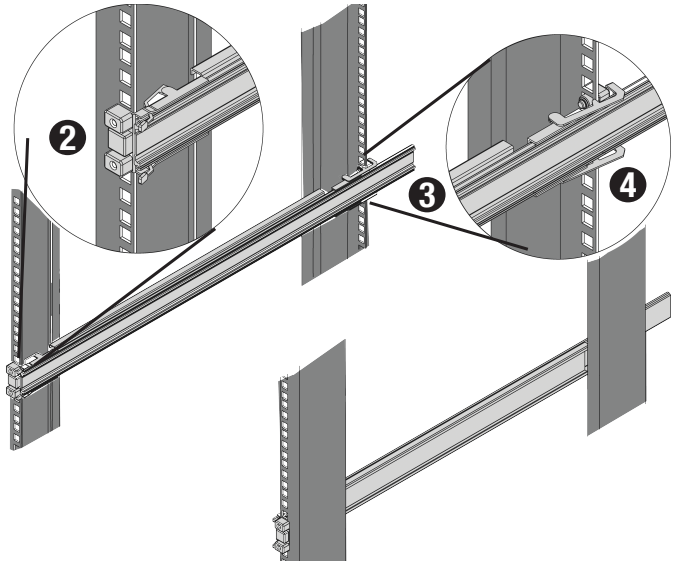

C. Install the device

Before installing the devicee ensure the inner rails are properly connected to the device and the outer rails are level and securely attached to the rack.

1. Pull the middle rails out from the front of the outer rails until they lock into place.
2. Align the inner rails with the middle rails and slide the device onto the rails until the system lock out tabs on the inner rails clicks into the front of the middle rails. Apply even pressure to both sides of the device while doing this.
3. Slide the release tabs forward on both inner rails at the same time and push the device all the way into the rack. When the unit has been completely pushed into the rack, the system release buttons will click into the locked position.

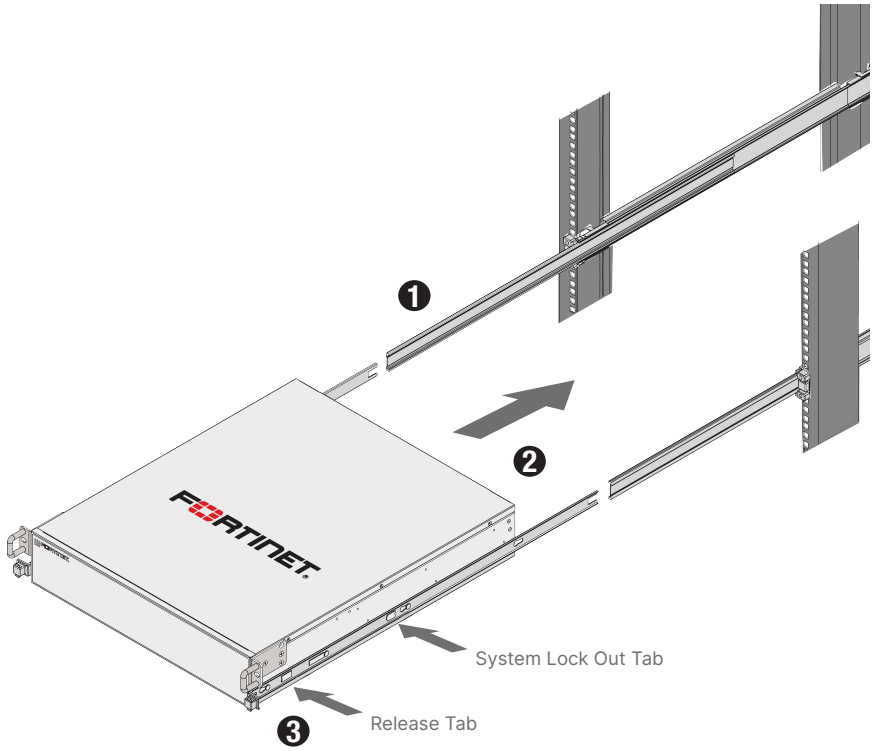

Caution: Do not pick up the server by the front handles. They are designed to only pull the unit from the rack.

Front FAZ-3100G



1 **Storage Slots 1 to 16 (SED HDD)**
4TB per slot, RAID-50, 56TB usable capacity, hot-swappable

Storage Status
- **Red**: Storage status error
- **Blue**: Storage device location
- **Off**: Storage status operating normally

Storage Activity
- **Green**: Storage device operating normally
- **Flashing Green**: Storage device in use
- **Off**: No power to storage device

2 **Power Button**

Power On: Short press to power on/off; long press to force shutdown
Power Off: System is off

Reset Button

ID Button press to toggle blue indicators on/off on the front and rear panels

ID LED identifies the device in the rack
- **Blue**: Identifying device
- **Off**: Not identifying device

System Failure LED
- **Amber**: System error
- **Off**: System is operating normally

Rear FAZ-3100G

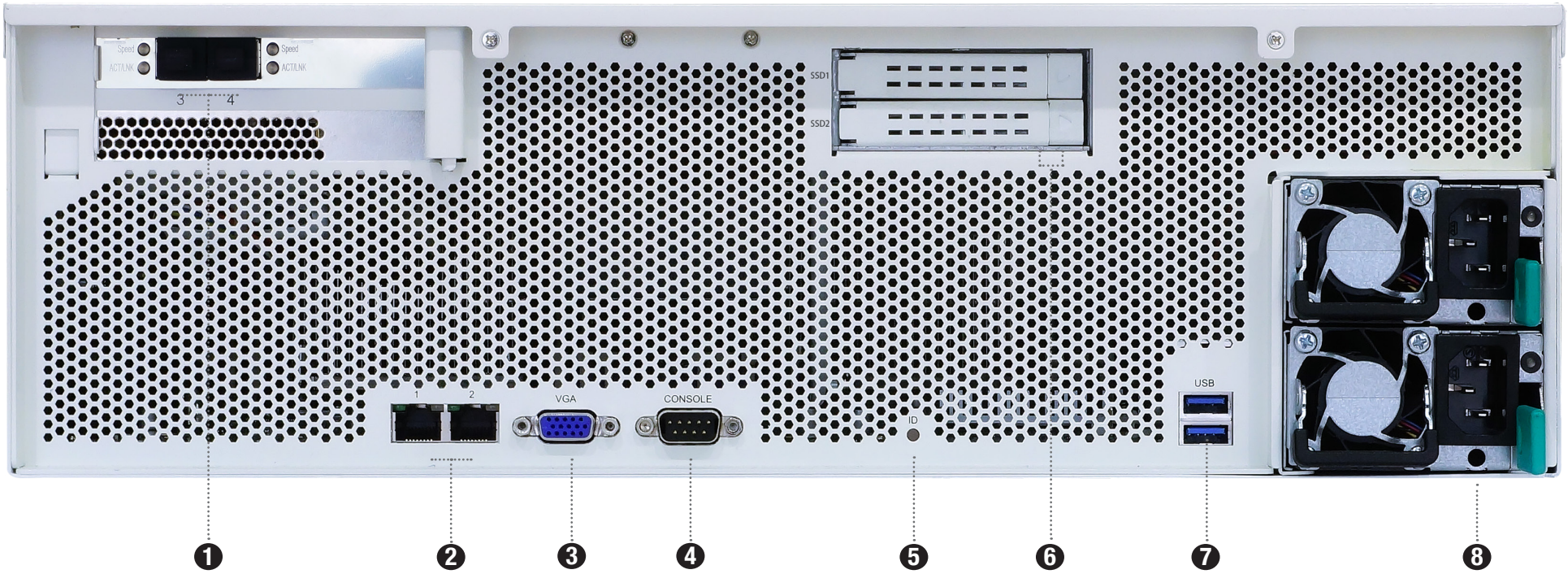

1 **SFP28 Top LED: Activity (Ports 3 and 4)**

- **Green**: Link established, no activity
- **Flashing Green**: Data activity
- **Off**: No link established

SFP28 Bottom LED: Speed (Ports 3 and 4)

- **Green**: 25 Gbps
- **Amber**: 10 Gbps
- **Off**: No link established

2 **Ethernet Activity LED (Ports 1 and 2)**

- **Green**: Connected
- **Flashing Green**: Data Activity
- **Off**: No activity

Ethernet Speed LED (Ports 1 and 2)

- **Green**: 1000Mbps
- **Amber**: 100Mbps
- **Off**: No link established

3 **VGA Port (DB15)** not in use

4 **Console Port (DB9)** CLI management connection

5 **ID Button and LED** for system identification

6 **NVMe SSD (x2)** 1.92TB per slot, 3.84TB total storage

Left LED

- **Red**: Failure detected
- **Off**: Normal operation

Right LED

- **Green**: Link established, no activity
- **Flashing Green**: Storage activity
- **Off**: No link established

7 **USB 3.0 Ports (x2 USB A)** available for use

8 **Redundant Power Supplies (x2)** 100-127Vac, 10A, 50-60Hz or 200-240Vac, 5A, 50-60Hz

- **Green**: PSU providing power
- **Amber**: PSU input not detected
- **Off**: PSU not providing power



Cautions and Warnings

Environmental Specifications

Ambient operating temperature: 0°C to 40°C

Rack Mount Instructions - The following or similar rack-mount instructions are included with the installation instructions:
Instructions de montage en rack - Les instructions de montage en rack suivantes ou similaires sont incluses avec les instructions d'installation:

Elevated Operating Ambient - If installed in a closed or multi-unit rack assembly, the operating ambient temperature of the rack environment may be greater than room ambient. Therefore, consideration should be given to installing the equipment in an environment compatible with the maximum ambient temperature (Tma) specified by the manufacturer.
Température ambiante élevée – S'il est installé dans un rack fermé ou à unités multiples, la température ambiante de fonctionnement de l'environnement du rack peut être supérieure à la température ambiante de la pièce. Par conséquent, il est important d'installer le matériel dans un environnement respectant la température ambiante maximale (Tma) stipulée par le fabricant.

Reduced Air Flow - Installation of the equipment in a rack should be such that the amount of air flow required for safe operation of the equipment is not compromised.
Ventilation réduite – Installation de l'équipement dans un rack doit être telle que la quantité de flux d'air nécessaire au bon fonctionnement de l'équipement n'est pas compromise.

Mechanical Loading - Mounting of the equipment in the rack should be such that a hazardous condition is not achieved due to uneven mechanical loading.
Chargement Mécanique – Montage de l'équipement dans le rack doit être telle qu'une situation dangereuse n'est pas lié à un chargement mécanique inégal.

Circuit Overloading - Consideration should be given to the connection of the equipment to the supply circuit and the effect that overloading of the circuits might have on overcurrent protection and supply wiring. Appropriate consideration of equipment nameplate ratings should be used when addressing this concern.
Surtension – Il convient de prendre l'ensemble des précautions nécessaires lors du branchement de l'équipement au circuit d'alimentation et être particulièrement attentif aux effets de la suralimentation sur le dispositif assurant une protection contre les courts-circuits et le câblage. Ainsi, il est recommandé de tenir compte du numéro d'identification de l'équipement.

Reliable Earthing - Reliable earthing of rack-mounted equipment should be maintained. Particular attention should be given to supply connections other than direct connections to the branch circuit (e.g. use of power strips).
Fiabilité de la mise à la terre – Fiabilité de la mise à la terre de l'équipement monté en rack doit être maintenue. Une attention particulière devrait être accordée aux connexions d'alimentation autres que les connexions directes au circuit de dérivation (par exemple de l'utilisation de bandes de puissance).

Refer to specific Product Model Data Sheet for Environmental Specifications (Operating Temperature, Storage Temperature, Humidity, and Altitude)
Référez à la Fiche Technique de ce produit pour les caractéristiques environnementales (Température de fonctionnement, température de stockage, humidité et l'altitude).

Safety

Moving parts — Hazardous moving parts. Keep away from moving fan blades.
Pièces mobiles – Pièces mobiles dangereuses. Se tenir éloigné des lames mobiles du ventilateur.

Battery – Risk of explosion if the battery is replaced by an incorrect type. Do not dispose of batteries in a fire. They may explode. Dispose of used batteries according to your local regulations. IMPORTANT: Switzerland: Annex 4.10 of SR814.013 applies to batteries.
Batterie – Risque d'explosion si la batterie est remplacée par un type incorrect. Ne jetez pas les batteries au feu. Ils peuvent exploser. Jetez les piles usagées conformément aux réglementations locales. IMPORTANT: Suisse: l'annexe 4.10 de SR814.013 s'appliquent aux batteries.

警告
本電池如果更換不正確會有爆炸的危險
請依製造商說明書處理用過之電池

CAUTION: There is a danger of explosion if a battery is incorrect replaced. Replace only with the same or equivalent type.
Dispose batteries of according to the manufacturer's instructions.
Disposing a battery into fire, a hot oven, mechanically crushing, or cutting it can result in an explosion.
Leaving a battery in an extremely hot environment can result in leakage of flammable liquid, gas, or an explosion.
If a battery is subjected to extremely low air pressure, it may result in leakage of flammable liquid, gas, or an explosion.
WARNUNG: Lithium-Batterie Achtung: Explosionsgefahr bei fehlerhafter Batteriewechsel. Ersetzen Sie nur den gleichen oder gleichwertigen Typ. Batterien gemäß den Anweisungen des Herstellers entsorgen.
Beseitigung einer BATTERIE in Feuer oder einen heißen Ofen oder mechanisches Zerkleinern oder Schneiden einer BATTERIE, die zu einer EXPLOSION führen kann.
Verlassen einer BATTERIE in einer extrem hohen Umgebungstemperatur, die zu einer EXPLOSION oder zum Austreten von brennbarer Flüssigkeit oder Gas führen kann.
Eine BATTERIE, die einem extrem niedrigen Luftdruck ausgesetzt ist, der zu einer EXPLOSION oder zum Austreten von brennbarer Flüssigkeit oder Gas führen kann.

CAUTION: Shock Hazard. Disconnect all power sources.
ATTENTION: Risque d'électrocution. Débranchez toutes les sources d'alimentation.

Caution: Slide/rail mounted equipment is not to be used as a shelf or a work space.
Attention: Un équipement monté sur bâti ne doit pas être utilisé sur une étagère ou dans un espace de travail.

Warning: Stability hazard.
Aviso: Perigo de estabilidade.

The rack may tip over causing serious personal injury.
O rack pode tombar causando ferimentos graves.

Before extending the rack to the installation position, read the installation instructions.
Antes de estender o rack para a posição de instalação, leia as instruções de instalação.

Do not put any load on the slide-rail mounted equipment in the installation position.
Não coloque nenhuma carga no equipamento montado em trilho deslizante na posição de instalação.

Do not leave the slide-rail mounted equipment in the installation position.
Não deixe o equipamento montado em trilho deslizante na posição de instalação.

Regulatory Notices

Federal Communication Commission (FCC) – USA

This device complies with Part 15 of the FCC Rules. Operation is subject to the following two conditions:
(1) this device may not cause harmful interference, and
(2) this device must accept any interference received; including interference that may cause undesired operation.

This equipment has been tested and found to comply with the limits for a Class A digital device, pursuant to Part 15 of the FCC Rules. These limits are designed to provide reasonable protection against harmful interference when the equipment is operated in a commercial environment. This equipment generates, uses, and can radiate radio frequency energy, and if it is not installed and used in accordance with the instruction manual, it may cause harmful interference to radio communications. Operation of this equipment in a residential area is likely to cause harmful interference, in which case the user will be required to correct the interference at his own expense.

WARNING: Any changes or modifications to this product not expressly approved by the party responsible for compliance could void the user's authority to operate the equipment

Industry Canada Equipment Standard for Digital Equipment (ICES) – Canada

CAN ICES-003 (A) / NMB-003 (A)

This digital apparatus does not exceed the Class A limits for radio noise emissions from digital apparatus set out in the Radio Interference Regulations of the Canadian Department of Communications.

Cet appareil numérique n'émet pas de bruits radioélectriques dépassant les limites applicables aux appareils numériques de la classe A prescrites dans le Règlement sur le brouillage radioélectrique édicte par le ministère des Communications du Canada.

European Conformity (CE) - EU

This is a Class A product. In a domestic environment, this product may cause radio interference, in which case the user may be required to take adequate measures.

CE

Voluntary Control Council for Interference (VCCI) – Japan

この装置は、クラスＡ機器です。この装置を住宅環境で使用すると電波妨害を引き起こすことがあります。この場合には使用者が適切な対策を講ずるよう要求されることがあります。

ＶＣＣＩ－Ａ

Product Safety Electrical Appliance & Material (PSE) – Japan

日本では電気用品安全法(PSE)の規定により、同梱している電源コードは本製品の専用電源コードとして利用し、他の製品に使用しないでください。

Bureau of Standards Metrology and Inspection (BSMI) – Taiwan

The presence conditions of the restricted substance (BSMI RoHS table) are available at the link below:
限用物質含有情況表 (RoHS Table) 請到以下 網址下載:
https://www.fortinet.com/bsmi

警告： 為避免電磁干擾，本產品不應安裝或使用於住宅環境。

請仔細閱讀以下說明
本設備勿置於潮濕處。
連接至電源前，請先檢查電壓。
當設備不用時，請將所有電源線拔除，避免電壓不穩而造成傷害。
勿將任何液體濺入設備中，避免線路短路。
基於安全理由，只有受到專業訓練的從業人員，才可以打開本設備。
請勿自行調整或修理已通電的設備，以確保您的安全。
如不小心受傷，請立刻找急救人員給予您適當的救護，千萬別因傷勢輕微而忽略自己的傷勢。

請依照台灣法規處置電池。
若不正確替換電池可能導致爆炸危險，替換電池時，請使用設備生產商推薦使用的電池。
請勿拆卸、刺穿或以其他方式損壞電池。

雷射設備非用戶維修設備，請與生產商聯繫維修事宜。

注意：要斷開電源，請將所有電源線從本機上拔下

滑軌警語:
延伸滑軌至進行安裝位置前，請閱讀安裝指示。
勿在安裝位置上放置任何負載於滑軌安裝設備上。
勿將滑軌安裝設備留置於進行安裝時之位置。

英屬蓋曼群島商防特網股份有限公司台灣分公司
地址：台北市內湖區行愛路176號2樓
電話：(02) 27961666

本設備只能在特定場域使用

China

警告：在居住环境中，运行此设备可能会造成无线电干扰。

