

Hewlett Packard
Enterprise

HPE ProLiant DL345 Gen10 Plus Server Maintenance and Service Guide

Part Number: 30-4B11C718-005
Published: February 2025
Edition: 5

HPE ProLiant DL345 Gen10 Plus Server Maintenance and Service Guide

Abstract

This document is for the person who installs, administers, and troubleshoots servers and storage systems. Hewlett Packard Enterprise assumes you are qualified in the servicing of computer equipment and trained in recognizing hazards in products with hazardous energy levels, and are familiar with the weight and stability precautions for rack installations.

Part Number: 30-4B11C718-005
Published: February 2025
Edition: 5

© Copyright 2022–2025 Hewlett Packard Enterprise Development LP

Notices

The information contained herein is subject to change without notice. The only warranties for Hewlett Packard Enterprise products and services are set forth in the express warranty statements accompanying such products and services. Nothing herein should be construed as constituting an additional warranty. Hewlett Packard Enterprise shall not be liable for technical or editorial errors or omissions contained herein.

Confidential computer software. Valid license from Hewlett Packard Enterprise required for possession, use, or copying. Consistent with FAR 12.211 and 12.212, Commercial Computer Software, Computer Software Documentation, and Technical Data for Commercial Items are licensed to the U.S. Government under vendor's standard commercial license.

Links to third-party websites take you outside the Hewlett Packard Enterprise website. Hewlett Packard Enterprise has no control over and is not responsible for information outside the Hewlett Packard Enterprise website.

Acknowledgments

AMD, the AMD Arrow symbol, ATI, and the ATI logo are trademarks of Advanced Micro Devices, Inc.

Linux® is the registered trademark of Linus Torvalds in the U.S. and other countries.

Windows® is a registered trademark or trademark of Microsoft Corporation in the United States and/or other countries.

All third-party marks are property of their respective owners.

Table of contents

- Illustrated parts catalog
  - Mechanical components
    - 2U bezel spare part
    - Air baffle spare part
    - Access panel spare parts
    - Rack-mounting hardware spare parts
    - Miscellaneous mechanical spare parts
  - System components
    - Bezel ear spare parts
    - Drive backplane spare parts
    - Fan spare parts
    - DIMM spare parts
    - Power supply spare parts
    - Heatsink spare parts
    - Processor spare parts
    - System battery spare part
    - System board spare part
    - Front I/O module spare part for the SFF chassis
  - Server options
    - Storage controller spare parts
    - Chassis intrusion detection switch spare part
    - Secondary riser board spare parts
    - Rear serial port interface spare part
    - Primary riser board spare parts
    - M.2 SATA SSD add-in card spare part
    - HPE NS204i-p NVMe OS Boot Device spare parts
    - OCP NIC 3.0 adapter spare parts
    - Energy pack spare parts
    - HPE 12Gb SAS Expander Card spare part
    - Pensando Distributed Services Platform card spare parts
    - Miscellaneous cable spare parts
    - Drive cable spare kits
    - HPE Trusted Platform Module 2.0 Gen10 Plus spare part
- Customer self repair
- Removal and replacement procedures
  - Safety considerations
    - Electrostatic discharge
    - Symbols on equipment
    - Rack warnings and cautions

        - Server warnings and cautions
    - Preparation procedures
        - Power down the server
        - Power up the server
        - Extending the server from the rack
        - Removing the server from the rack
        - Remove the access panel
        - Removing the fan cage
        - Removing a riser cage
        - Install the access panel
        - Releasing the cable management arm
        - Releasing the full-length expansion board retainer
    - Removing and replacing the front bezel
    - Removing and replacing a hot-plug SAS, SATA or NVMe drive
    - Removing and replacing a drive blank
    - Removing and replacing the cable management arm
    - Removing and replacing a power supply
        - Power supply warnings and cautions
        - DC power supply warnings and cautions
        - Removing and replacing a hot-plug AC power supply
        - Removing and replacing the HPE 800 W Flex Slot -48 VDC hot-plug power supply
        - Removing and replacing an HPE 1600 W Flex Slot -48 VDC hot-plug power supply
    - Removing and replacing a power supply blank
    - Removing and replacing the rack rails
    - Removing and replacing the hot-plug fan
    - Removing and replacing the fan power cable
    - Removing and replacing the air baffle
    - Removing and replacing the 8 SFF drive backplane
    - Removing and replacing an LFF drive backplane
    - Removing and replacing the 2 SFF rear drive backplane
    - Removing and replacing an energy pack
    - Removing and replacing an energy pack holder
    - Removing and replacing a DIMM
    - Removing and replacing a heatsink
    - Removing and replacing a processor
    - Removing and replacing a type-a modular storage controller
    - Removing and replacing an expansion board
    - Removing and replacing the M.2 SATA SSD add-in card
    - Removing and replacing the M.2 SATA SSD from the add-in card
    - Removing and replacing a PCIe riser board
    - Removing and replacing the HPE NS204i-p NVMe OS Boot Device option

        - Removing and replacing the boot device
        - Removing and replacing a boot device drive
        - Relocating the M.2 drive retaining latches
    - Removing and replacing the Pensando DSP DSC-25 2p SFP28 card
        - Decommissioning the Pensando DSP DSC-25 2p SFP28 card
        - Removing the Pensando DSP DSC-25 2p SFP28 card
        - Replacing the Pensando DSP DSC-25 2p SFP28 card
    - Removing and replacing an accelerator
    - Removing and replacing the LFF bezel ear
    - Removing and replacing the SFF front I/O module
    - Removing and replacing the bezel ear
    - Removing and replacing the chassis intrusion detection switch
    - Removing and replacing the OCP NIC 3.0 adapter
    - Removing and replacing the serial port
    - System battery replacement
        - System battery information
        - Replace the system battery
    - System board replacement
        - Removing the system board
        - Replacing the system board
        - Re-entering the server serial number and product ID
    - HPE Trusted Platform Module 2.0 Gen10 Plus option
- Troubleshooting
    - NMI functionality
    - Troubleshooting resources
- Configuration and diagnostic utilities
- Component identification
    - Front panel components
        - iLO Service Port
    - Front panel LEDs and buttons
        - Server UID LED
        - Using the UID button to view the Server Health Summary
        - Front panel LED power fault codes
    - Rear panel components
    - Rear panel LEDs
    - System board components
        - System maintenance switch descriptions
        - DIMM slot locations
        - DIMM label identification
        - Processor and socket components
    - Drive box numbering

- Drive bay numbering
  - Drive bay numbering: Storage controller
  - Drive bay numbering: SAS expander
- HPE Basic Drive LED definitions
- DSC-25 2-port SFP28 card ports and LEDs
- HPE NS204i-p NVMe OS Boot Device components
- HPE NS204i-p NVMe OS Boot Device LED definitions
- Fan bay numbering

- Cabling
  - Cabling guidelines
  - Storage cabling
    - Drive power cabling
      - 12 LFF drive power cabling
      - 24 SFF drive power cabling
      - 2 SFF drive power cabling
    - Storage controller cabling
      - 8 LFF SATA Box 2 and Box 3 to system board connector (J17) cabling
      - 8 LFF SAS/SATA Box 2 and Box 3 to type-a controller cabling
      - 12 LFF SAS/SATA to P816-a controller cabling
      - 12 LFF SAS/SATA + 2SFF to P816-a controller cabling
      - 8 SFF SATA Box 3 to system board connector (J17) cabling
      - 8 SFF SAS/SATA Box 3 to type-a controller cabling
      - 8 SFF SAS/SATA Box 3 to PCIe controller cabling
      - 8 SFF SAS/SATA Box 2 to type-a controller (E208i-a/E408i-a) cabling
      - 8 SFF SAS/SATA Box 2 to type-a controller (P816i-a) cabling
      - 8 SFF SAS/SATA Box 1 to type-a controller cabling
      - 16 SFF SAS/SATA Box 2 and Box 3 to P816i-a controller cabling
      - 24 SFF SAS/SATA to SAS expander cabling
      - 8 SFF NVMe x4 Box 2 cabling
      - 16 SFF SAS/SATA Box 1 and Box 3 to P816i-a controller cabling
      - 16 SFF NVMe x4 Box 1 and Box 2 cabling
      - 2 SFF SAS/SATA Box 4 to SAS expander port 9 cabling
      - 8 SFF Basic U.3x1 to PCIe x16 or x32 tri-mode controller in primary riser cabling
      - 8 SFF Basic U.3x1 to PCIe x16 or x32 Ttri-mode controller in secondary riser cabling
      - 8 SFF Basic U.3x1 Box2 and Box3 to type-a tri-mode controller cabling
      - 24 SFF NVMe x4 Premium U.2/U.3 cabling
      - 8 SFF NVMe x4 Box 3 Premium U.2/U.3 to x32 tri-mode controller in primary riser cabling
      - 8 SFF NVMe x4 Box 2 Premium U.2/U.3 to x32 tri-mode controller in primary riser cabling
      - 8 SFF NVMe x4 Box 1 Premium U.2/U.3 to x32 tri-mode controller in secondary riser cabling
      - 8 SFF NVMe x2 Box 3 Premium U.2/U.3 to x16 or x32 tri-mode controller in primary riser cabling
      - 8 SFF NVMe x2 Box 2 Premium U.2/U.3 to x16 or x32 tri-mode controller cabling

- 8 SFF NVMe x2 Box 1 Premium U.2/U.3 to x16 or x32 tri-mode controller in secondary riser cabling
- 2 SFF SAS/SATA Box 4 to system board J1 (port 9A) cabling
- 2 SFF SAS/SATA Box 4 to type-a controller cabling
- 2 SFF NVMe Box 4 to tri-mode controller cabling

- Energy pack cabling
- Storage controller backup power cabling

- M.2 SATA SSD cabling
- Accelerator or GPU power cabling
- Fan cabling
- OCP bandwidth upgrade cabling
- Serial port cabling
- Chassis intrusion detection switch cabling
- Front I/O cabling

- Specifications
  - Environmental specifications
  - Limited ambient temperature limitation for specific drive configurations
  - Mechanical specifications
  - Power supply specifications
    - HPE 500 W Flex Slot Platinum Hot-plug Low Halogen Power Supply (94% efficiency)
    - HPE 800 W Flex Slot Platinum Hot-plug Low Halogen Power Supply
    - HPE 800 W Flex Slot Titanium Hot-plug Low Halogen Power Supply
    - HPE 800 W Flex Slot Universal Hot-plug Low Halogen Power Supply
    - HPE 800 W Flex Slot -48 VDC Hot-plug Low Halogen Power Supply
    - HPE 1600 W Flex Slot Platinum Hot-plug Low Halogen Power Supply
    - HPE 1600 W Flex Slot -48 VDC Hot-plug Power Supply
- Websites
- Support and other resources
  - Accessing Hewlett Packard Enterprise Support
  - Accessing updates
  - Remote support
  - Warranty information
  - Regulatory information
  - Documentation feedback

Illustrated parts catalog

This chapter lists the hardware spare parts supported by the server.

- Mechanical components
- System components
- Server options

Subtopics

Mechanical components
System components
Server options

Mechanical components

Hewlett Packard Enterprise continually improves and changes product parts. For complete and current supported spare parts information, see the Hewlett Packard Enterprise PartSurfer website:

https://www.hpe.com/info/partssurfer

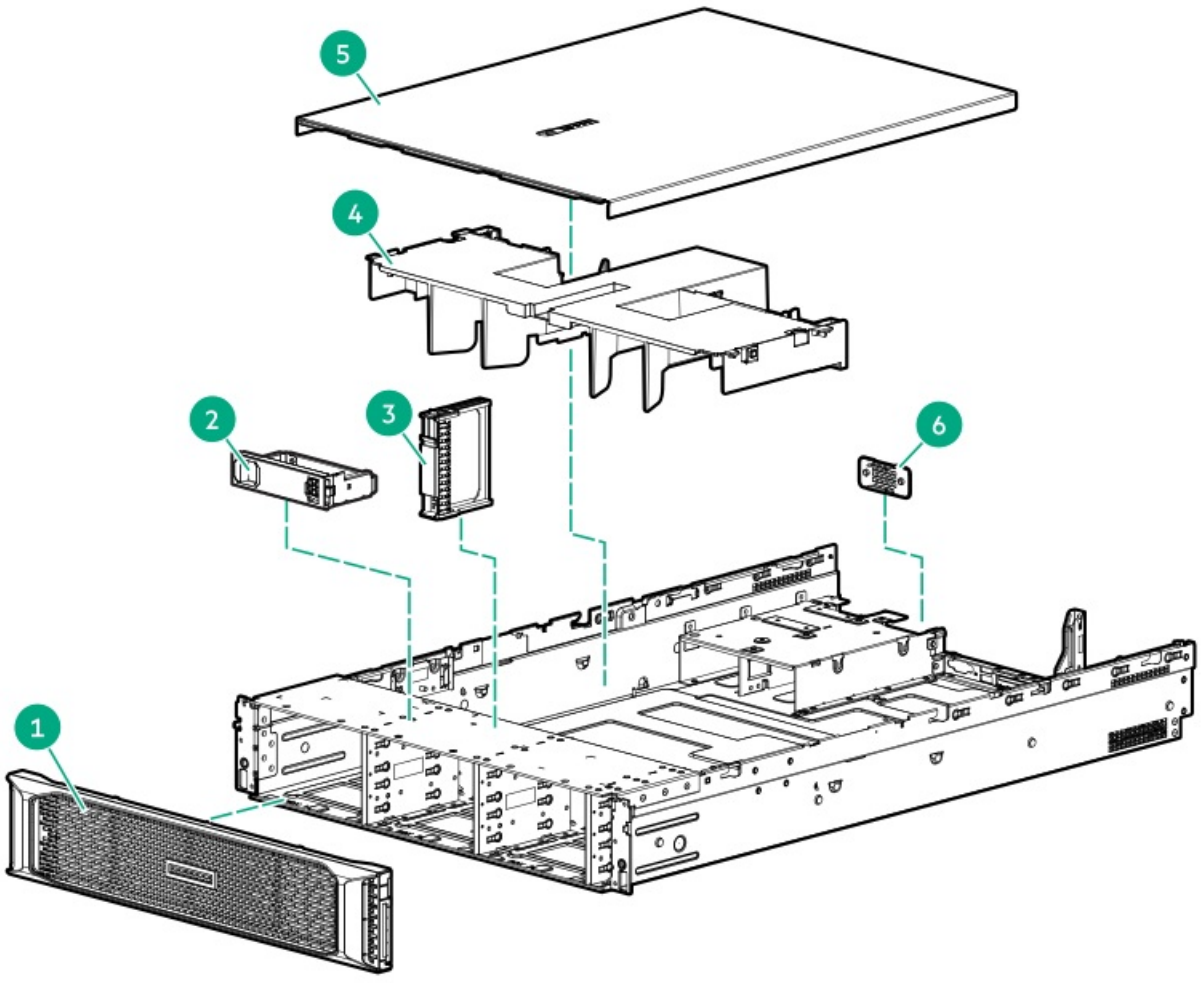

Item	Description
1	Front bezel spare part
2	LFF drive blank spare part
3	SFF drive blank spare part
4	Air baffle spare part
5	Access panel spare parts
6	Serial port blank
7	Rack-mounting hardware spare parts*
8	Miscellaneous mechanical spare parts*

* Not shown

For more information, see Removal and replacement procedures.

Subtopics

2U bezel spare part
Air baffle spare part
Access panel spare parts
Rack-mounting hardware spare parts
Miscellaneous mechanical spare parts

2U bezel spare part

Customer self repair: **Mandatory**

Description	Spare part number
2U bezel	875065-001

Air baffle spare part

Customer self repair: **Mandatory**

Description	Spare part number
Air baffle	P42172-001

Access panel spare parts

Customer self repair: **Mandatory**

Description	Spare part number
Access panel for the SFF chassis	P42170-001
Access panel for the LFF chassis	P42171-001

Rack-mounting hardware spare parts

Customer self repair: **Mandatory**

Description	Spare part number
SFF easy install rail kit	P24098-001
LFF easy install rail kit	P24099-001
Cable management arm	P24100-001

Miscellaneous mechanical spare parts

Customer self repair: **Mandatory**

Description	Spare part number
SFF drive blank	670033-001
SFF drive box blank	875069-001*
LFF drive blank	827363-001
• LFF drive bay blank • OCP NIC slot blank	P24101-001*
Energy pack holder	875066-001*
Quad NIC port blank	P19929-001
Serial port blank	878510-001*
Power supply blank	775423-001*
Full-length card retainers	P39788-001*

* This is a miscellaneous spares kit; only the component listed in this table are used in this server.

System components

Hewlett Packard Enterprise continually improves and changes product parts. For complete and current supported spare parts information, see the Hewlett Packard Enterprise PartSurfer website:

https://www.hpe.com/info/partssurfer

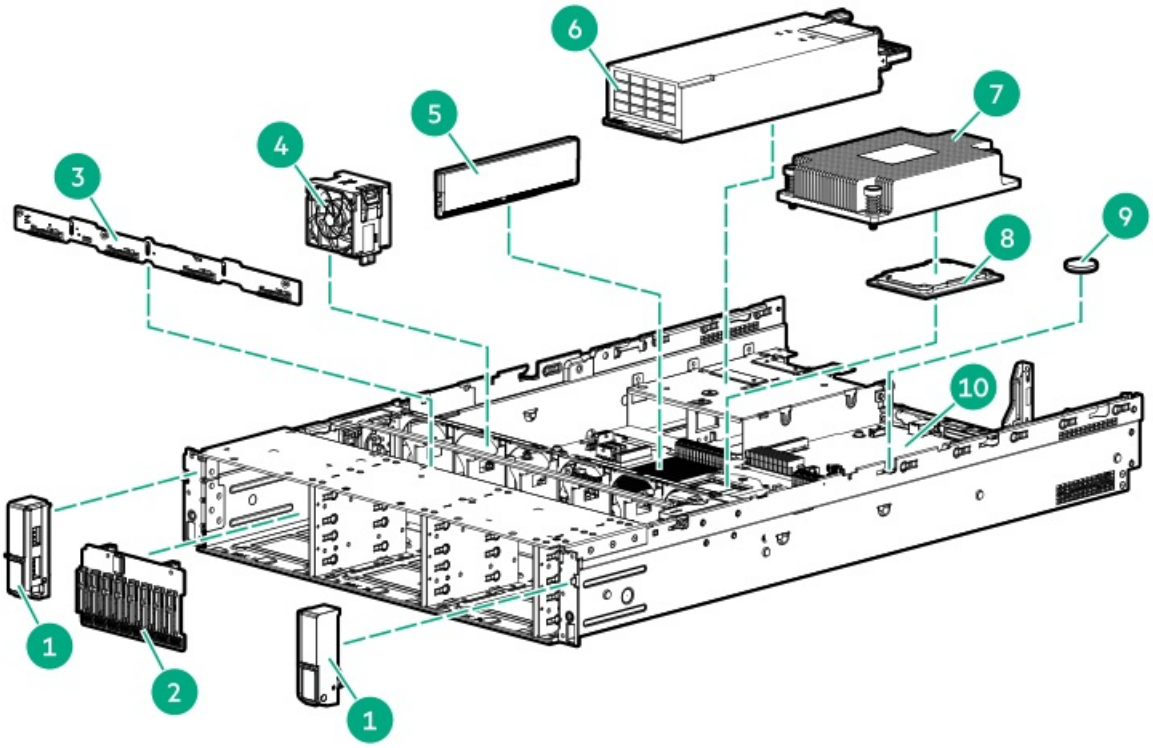

Item	Description
1	Bezel ear spare parts
2	SFF drive backplane spare parts
3	LFF drive backplane spare parts
4	Fan spare parts
5	DIMM spare parts
6	Power supply spare parts
7	Heatsink spare parts
8	Processor spare parts
9	System battery spare part
10	System board spare part
11	Front I/O module spare part for the SFF chassis *

* Not shown

For more information, see Removal and replacement procedures.

Subtopics

- Bezel ear spare parts
- Drive backplane spare parts
- Fan spare parts
- DIMM spare parts
- Power supply spare parts
- Heatsink spare parts
- Processor spare parts
- System battery spare part
- System board spare part
- Front I/O module spare part for the SFF chassis

Bezel ear spare parts

Customer self repair: **Optional**

Description	Spare part number
Right bezel ear assembly for the LFF chassis, includes: • Right bezel ear • Front I/O module and cable	P42173-001

Customer self repair: **Mandatory**

Description	Spare part number
Bezel ear spare kit, includes: • Left bezel ear for the LFF chassis • Right and left bezel ears for the SFF chassis	P24141-001*

* This is a miscellaneous spares kit; only the component listed in this table are used in this server.

Drive backplane spare parts

Customer self repair: **Optional**

Description	Spare part number
SFF drive backplane spares	—
8 SFF SAS/SATA drive backplane	P39777-001
8 SFF x4 U.2 NVMe drive backplane	P39785-001
8 SFF x1 U.3 NVMe drive backplane	P39781-001
8 SFF x4 U.3 NVMe drive backplane	P39780-001
2 SFF x4 U.3 NVMe drive backplane	P39782-001
LFF drive backplane spares	—
4 LFF SAS/SATA backplane	P40451-001

Fan spare parts

Customer self repair: **Mandatory**

Description	Spare part number
Standard fan	P23971-001
High-performance fan	P23970-001

DIMM spare parts

Customer self repair: **Mandatory**

Description	Spare part number
8 GB, single-rank x8 PC4-3200AA-R	P20499-001
16 GB, single-rank x4 PC4-3200AA-R	P20500-001
16 GB, dual-rank x8 PC4-3200AA-R	P20501-001
32 GB, single-rank x4 PC4-3200AA-R	P39381-001
32 GB, dual-rank x4 PC4-3200AA-R	P20503-001
32 GB, dual-rank x8 PC4-3200AA-R	P20502-001
64 GB, dual-rank x4 PC4-3200AA-R	P20504-001
128 GB, quad-rank x4 PC4-3200AA-L	P20505-001
256 GB, octal-rank x4 PC4-3200AA-L	P20506-001

Power supply spare parts

Customer self repair: **Mandatory**

Description	Spare part number
HPE 500 W Flex Slot Platinum Hot-plug Low Halogen Power Supply	866729-001
HPE 800 W Flex Slot Platinum Hot-plug Low Halogen Power Supply	P39385-001
HPE 800 W Flex Slot Titanium Hot-plug Low Halogen Power Supply	866793-001
HPE 800 W Flex Slot Universal Hot-plug Low Halogen Power Supply	866727-001
HPE 800 W Flex Slot -48 VDC Hot-plug Low Halogen Power Supply	866728-001
HPE 1600 W Flex Slot Platinum Hot-plug Low Halogen Power Supply	P39384-001
HPE 1600 W Flex Slot -48 VDC Hot-plug Power Supply	P18510-001
1600 W Flex Slot -48 VDC power ground lug kit	P25161-001

- Ground (earthed) wire lugs
- -48 V and return wire lugs
- Plastic power input cover

Heatsink spare parts

Customer self repair: **Optional**

Description	Spare part number
Standard heatsink (for processors with a TDP lower than 180 W)	P42174-001
High-performance heatsink (for processors with a TDP of 180 W or higher)	P42175-001

Processor spare parts

Customer self repair: **Optional**

Description	Spare part number
2nd Gen AMD 7002 Series processors	—
AMD EPYC 7232P, 3.10 GHz, 8C, 120 W processor	P22808-001
AMD EPYC 7302P, 3.00 GHz, 16C, 155 W processor	P17340-001
AMD EPYC 7402P, 2.80 GHz, 24C, 180 W processor	P17337-001
AMD EPYC 7502P, 2.50 GHz, 32C, 180 W processor	P17335-001
AMD EPYC 7702P, 2.00 GHz, 64C, 200 W processor	P17333-001
3rd Gen AMD 7003 Series processors	—
AMD EPYC 7413, 2.65 GHz, 24C, 180 W processor	P39055-001
AMD EPYC 7763, 2.45 GHz , 64C, 280 W processor	P39062-001
AMD EPYC 75F3, 2.95 GHz, 32C, 280 W processor	P39066-001
AMD EPYC 72F3, 3.70 GHz, 8C, 180 W processor	P39063-001
AMD EPYC 7313P, 3.00 GHz, 16C, 155 W processor	P39067-001
AMD EPYC 7343, 3.20 GHz, 16C, 190 W processor	P39054-001
AMD EPYC 73F3, 3.50 GHz, 16C, 240 W processor	P39064-001
AMD EPYC 7443P, 2.85 GHz, 24C, 200 W processor	P39068-001
AMD EPYC 7453, 2.75 GHz, 28C, 225 W processor	P39056-001
AMD EPYC 74F3, 3.20 GHz, 24C, 240 W processor	P39065-001
AMD EPYC 7513, 2.60 GHz, 32C, 200 W processor	P39058-001
AMD EPYC 7543, 2.80 GHz, 32C, 225 W processor	P39059-001
AMD EPYC 7543P, 2.80 GHz, 32C, 225 W processor	P39069-001
AMD EPYC 7643, 2.30 GHZ, 48C, 225 W processor	P39489-001
AMD EPYC 7663, 2.00 GHz, 56C, 240 W processor	P39060-001
AMD EPYC 7713P, 2.00 GHz, 64C, 225 W processor	P39070-001

System battery spare part

Customer self repair: **Mandatory**

Description	Spare part number
System battery	319603-001

System board spare part

Customer self repair: **Optional**

Description	Spare part number
System board assembly, includes:	P40841-001

- System board
- System board handle
- Metal sub-pan
- OCP NIC adapter guard rails

Front I/O module spare part for the SFF chassis

Customer self repair: **Mandatory**

Description	Spare part number
Front I/O module for the SFF chassis	P42186-001

Server options

Hewlett Packard Enterprise continually improves and changes product parts. For complete and current supported spare parts information, see the Hewlett Packard Enterprise PartSurfer website:

https://www.hpe.com/info/partssurfer

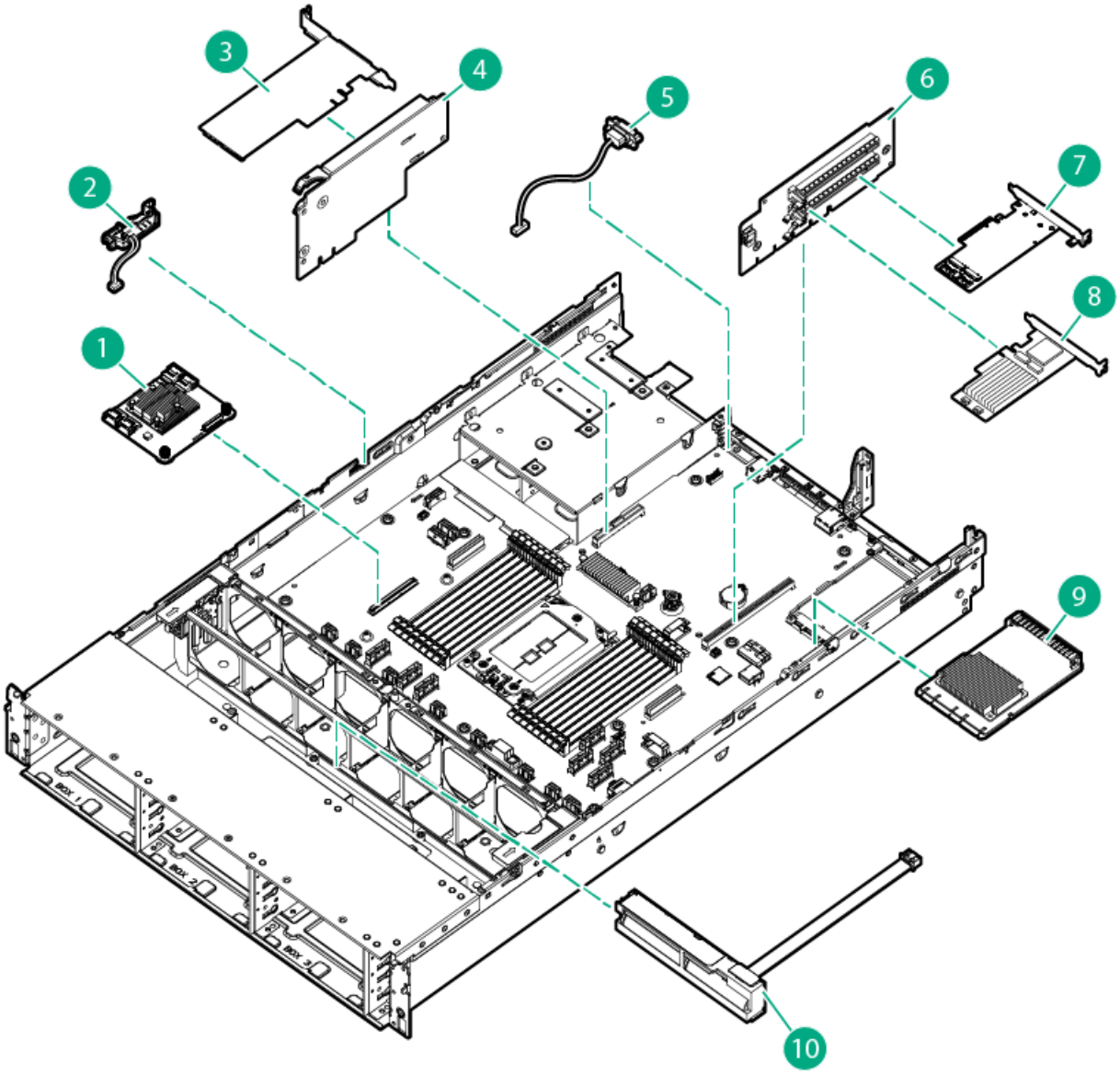

Item	Description
1	Type-a modular storage controller spare parts (AROC)
2	Chassis intrusion detection switch spare part
3	Type-p PCIe plug-in storage controller spare parts
4	Secondary riser board spare parts
5	Serial port cable spare part
6	Primary riser board spare parts
7	M.2 SATA SSD add-in card spare part
8	HPE NS204i-p NVMe OS Boot Device spare parts
9	OCP NIC 3.0 adapter spare parts
10	Energy pack spare parts
11	HPE 12Gb SAS Expander Card spare part *
12	Pensando Distributed Services Platform card spare parts *
13	Miscellaneous cable spare parts *
14	Drive cable spare kits *
15	HPE Trusted Platform Module 2.0 Gen10 Plus spare part *

* Not shown

For more information, see Removal and replacement procedures.

Subtopics

- Storage controller spare parts
- Chassis intrusion detection switch spare part
- Secondary riser board spare parts
- Rear serial port interface spare part
- Primary riser board spare parts
- M.2 SATA SSD add-in card spare part
- HPE NS204i-p NVMe OS Boot Device spare parts
- OCP NIC 3.0 adapter spare parts
- Energy pack spare parts
- HPE 12Gb SAS Expander Card spare part
- Pensando Distributed Services Platform card spare parts
- Miscellaneous cable spare parts
- Drive cable spare kits
- HPE Trusted Platform Module 2.0 Gen10 Plus spare part

Storage controller spare parts

Customer self repair: **Mandatory**

Description	Spare part number
HPE Smart Array E208e-p SR Gen10 Controller	836267-001
HPE Smart Array E208i-a SR Gen10 Controller	836259-001
HPE Smart Array E208i-p SR Gen10 Controller	836266-001
HPE Smart Array P408e-p SR Gen10 Controller	836270-001
HPE Smart Array P408i-a SR Gen10 Controller	836260-002
HPE Smart Array P408i-p SR Gen10 Controller	836269-001
HPE Smart Array P816i-a SR Gen10 Controller	836261-002
HPE SR416i-a Gen10 Plus Controller	P13928-001
HPE MR216i-a Gen10 Plus Controller	P28348-001
HPE MR416i-a Gen10 Plus Controller	P28335-001
HPE SR932i-p Gen10 Plus Controller	P18875-001
HPE MR216i-p Gen10 Plus Controller	P28336-001
HPE MR416i-p Gen10 Plus Controller	P17303-001
HPE AROC 1-Port NVMe adapter	P18719-001

Chassis intrusion detection switch spare part

Customer self repair: **Mandatory**

Description	Spare part number
Chassis intrusion detection switch	P23687-001

Secondary riser board spare parts

Customer self repair: **Optional**

Description	Spare part number
PCIe4 x16 secondary riser	P42179-001
PCIe4 2x8 secondary riser	P42178-001
PCIe secondary riser with SlimSAS ports	P20158-001

Rear serial port interface spare part

Customer self repair: **Mandatory**

Description	Spare part number
Rear serial port interface	875571-001

Primary riser board spare parts

Primary riser board spare parts

Customer self repair: **Optional**

Description	Spare part number
PCIe4 2x16 primary riser	P42176-001
PCIe4 x16 primary riser with SlimSAS ports	P42177-001

M.2 SATA SSD add-in card spare part

Customer self repair: **Mandatory**

Description	Spare part number
M.2 SATA SSD add-in card	882359-001

HPE NS204i-p NVMe OS Boot Device spare parts

Customer self repair: **Mandatory**

Description	Spare part number
HPE NS204i-p NVMe OS Boot Device	P14379-001
480 GB NVMe x4 RI M.2 22110 DS SSD	P24886-001

OCP NIC 3.0 adapter spare parts

Customer self repair: **Mandatory**

Description	Spare part number
HPE Ethernet 1Gb 4-port OCP NIC 3.0 Adapter	P14487-001
HPE Ethernet 10Gb 2-port OCP NIC 3.0 Adapter	P13640-001

Energy pack spare parts

Customer self repair: **Mandatory**

Description	Spare part number
HPE Smart Storage Battery, 96 W, 145 mm cable	878643-001
HPE Smart Storage Hybrid Capacitor, 12 W, 145 mm cable	P07473-001

HPE 12Gb SAS Expander Card spare part

Customer self repair: **Optional**

Description	Spare part number
HPE 12G SAS Expander Card	761879-001

Pensando Distributed Services Platform card spare parts

Customer self repair: **Mandatory**

Description	Spare part number
Pensando DSP DSC-25 2p SFP28 card	P27682-001
Pensando DSP DSC-100 2p SFP28 Card	P38405-001

Miscellaneous cable spare parts

Customer self repair: **mandatory**

Description	Spare part number
Miscellaneous cable spare kit • Fan cable • 2 SFF power cable • Energy pack extension cable • Auxiliary power cable for low-performance graphics card installed in secondary riser	P42180-001
Auxiliary power Y-cable for high-performance graphics cards installed in primary riser	P47246-001
M.2 SATA SSD splitter cable	P22821-001*
OCP bandwidth upgrade cable	P23751-001*

* This is a miscellaneous spares kit; only the cable listed in this table is used in this server.

Drive cable spare kits

Customer self repair: **Mandatory**

Description	Spare part number
8 SFF SAS/SATA drive cable spare kits	—
8 SFF SAS/SATA drive cable spare kit • Drive backplane power cable • Mini-SAS cable assemblies for boxes 1 and 2 connections to a type-a Gen10 controller	P42181-001
8 SFF SAS/SATA drive box 3 drive cable spare kit • Mini-SAS cable assembly for type-a Gen10 controller • SATA splitter cable for box 3 connection to the system board	P42185-001

Description	Spare part number
8 LFF SAS/SATA drive cable spare kit	—
• Drive backplane power cable • Mini-SAS cables for boxes 1, 2, and 3 connections to type-a Gen10 controller • SATA splitter cable for boxes 2 and 3 connections to the system board	P42182-001
2 SFF x4 U.3 drive cable spare kits	—
2 SFF x4 U.3 NVMe drive cable spare kit • SlimSAS cable for type-p Gen10 Plus tri-mode controller • SlimSAS cable for system board (NVMe)	P42183-001
2 SFF x4 U.3 SATA/SAS drive cable spare kit • Mini-SAS cable for type-a Gen10 Plus controller/SAS expander card • Mini-SAS cable for type-p Gen10 Plus controller • SlimSAS cable for system board (SATA)	P42184-001
16 SFF x4 U.2/U.3 NVMe drive cable spare kits	—
Box 1 SlimSAS cable assembly for the: • System board • Single-port NVMe type-a adapter	P42188-001
Box 2 ports 1–3 SlimSAS cable assembly for system board	P42189-001
Box 2 port 4 SlimSAS cable for the system board	P42190-001
24 SFF x4 U.2/U.3 NVMe drive cable spare kits	—
Box 1 port 1 SlimSAS cable for secondary riser SlimSAS port 2B	P42191-001
Box 1 ports 2–4 SlimSAS cable assembly for the: • System board • Single-port NVMe controller • Secondary riser SlimSAS port 1B	P42192-001
Box 2 SlimSAS cable assembly for the system board	P42187-001
Box 3 ports 1–3 SlimSAS cable assembly for the: • System board • Primary riser SlimSAS ports 3B and 4B	P42193-001
Box 3 port 4 SlimSAS cable for the system board	P42194-001
24 SFF x1 U.3 NVMe drive cable spare kits for type-p Gen10 Plus tri-mode controller	—
• Box 1 or 3 SlimSAS cable for controller installed in the primary or secondary riser • Box 2 SlimSAS cable for for controller installed in the primary or secondary riser	P27685-001
Box 1 or 3 SlimSAS cable for controller installed in the primary or secondary riser	P42195-001
24 SFF x4 U.2/U.3 NVMe drive cable spare kit for type-p Gen10 Plus tri-mode controller	—
• Box 1 SlimSAS cable assembly for controller installed in the secondary riser • Box 2 SlimSAS cable assembly for controller installed in the primary riser • Box 3 SlimSAS cable assembly for controller installed in the primary riser	P42196-001
8 SFF x4 U.2/U.3 NVMe drive cable spare kits for system board connections	—

Description	Spare part number
Box 2 ports 1–3 SlimSAS cable assembly	P42189-001
Box 2 port 4 SlimSAS cable assembly	P42197-001
8 SFF SAS/SATA drive cable spare kit for type-p Gen10 Plus controller	—
Box 3 SlimSAS cable assembly for type-p Gen10 Plus controller installed in the primary riser	784621-001 [1]
8 SFF x4 U.3 NVMe drive cable spare kits for type-p Gen10 Plus tri-mode controller	—
• Box 2 ports 1–2 SlimSAS splitter cable • Box 2 ports 3–4 SlimSAS splitter cable	P24135-001
• Box 1 or 3 ports 1–2 SlimSAS splitter cable • Box 1 or 3 ports 3–4 SlimSAS splitter cable	P24134-001
12G SAS Expander Card cable spare kit	—
Box 1 Mini-SAS cable assembly to SAS expander card ports 3–4	784629-001 [2]
Boxes 2 and 3 Mini-SAS cable assembly to SAS expander card ports 5–8	P24139-001 [3]
Mini-SAS cable assemblies for type-a storage controller • Mini-SAS cable to SAS expander card port 1 • Mini-SAS cable to SAS expander card port 1	P23258-001

1 This is a miscellaneous cable spare kit; only the 747568-001 cable is used in this server.
2 This is a miscellaneous cable spare kit; only the 776402-001 cable is used in this server.
3 This is a miscellaneous cable spare kit; only the P20850-001 cable is used in this server.

HPE Trusted Platform Module 2.0 Gen10 Plus spare part

Customer self repair: **No**

Description	Spare part number
HPE Trusted Platform Module 2.0 Gen10 Plus	P23625-001

Customer self repair

Hewlett Packard Enterprise products are designed with many Customer Self Repair (CSR) parts to minimize repair time and allow for greater flexibility in performing defective parts replacement. If during the diagnosis period Hewlett Packard Enterprise (or Hewlett Packard Enterprise service providers or service partners) identifies that the repair can be accomplished by the use of a CSR part, Hewlett Packard Enterprise will ship that part directly to you for replacement. There are two categories of CSR parts:

- **Mandatory**—Parts for which customer self repair is mandatory. If you request Hewlett Packard Enterprise to replace these parts, you will be charged for the travel and labor costs of this service.
- **Optional**—Parts for which customer self repair is optional. These parts are also designed for customer self repair. If, however, you require that Hewlett Packard Enterprise replace them for you, there may or may not be additional charges, depending on the type of warranty service designated for your product.

NOTE

Some Hewlett Packard Enterprise parts are not designed for customer self repair. In order to satisfy the customer warranty, Hewlett Packard Enterprise requires that an authorized service provider replace the part. These parts are identified as "No" in the Illustrated Parts Catalog.

Based on availability and where geography permits, CSR parts will be shipped for next business day delivery. Same day or four-hour delivery may be offered at an additional charge where geography permits. If assistance is required, you can call the Hewlett Packard Enterprise Support Center and a technician will help you over the telephone. Hewlett Packard Enterprise specifies in the materials shipped with a replacement CSR part whether a defective part must be returned to Hewlett Packard Enterprise. In cases where it is required to return the defective part to Hewlett Packard Enterprise, you must ship the defective part back to Hewlett Packard Enterprise within a defined period of time, normally five (5) business days. The defective part must be returned with the associated documentation in the provided shipping material. Failure to return the defective part may result in Hewlett Packard Enterprise billing you for the replacement. With a customer self repair, Hewlett Packard Enterprise will pay all shipping and part return costs and determine the courier/carrier to be used.

For more information about the Hewlett Packard Enterprise CSR program, contact your local service provider.

Parts only warranty service

Your Hewlett Packard Enterprise Limited Warranty may include a parts only warranty service. Under the terms of parts only warranty service, Hewlett Packard Enterprise will provide replacement parts free of charge.

For parts only warranty service, CSR part replacement is mandatory. If you request Hewlett Packard Enterprise to replace these parts, you will be charged for the travel and labor costs of this service.

Réparation par le client (CSR)

Les produits Hewlett Packard Enterprise comportent de nombreuses pièces CSR (Customer Self Repair = réparation par le client) afin de minimiser les délais de réparation et faciliter le remplacement des pièces défectueuses. Si pendant la période de diagnostic, Hewlett Packard Enterprise (ou ses partenaires ou mainteneurs agréés) détermine que la réparation peut être effectuée à l'aide d'une pièce CSR, Hewlett Packard Enterprise vous l'envoie directement. Il existe deux catégories de pièces CSR :

- **Obligatoire**—Pièces pour lesquelles la réparation par le client est obligatoire. Si vous demandez à Hewlett Packard Enterprise de remplacer ces pièces, les coûts de déplacement et main d'œuvre du service vous seront facturés.
- **Facultatif**—Pièces pour lesquelles la réparation par le client est facultative. Ces pièces sont également conçues pour permettre au client d'effectuer lui-même la réparation. Toutefois, si vous demandez à Hewlett Packard Enterprise de remplacer ces pièces, l'intervention peut ou non vous être facturée, selon le type de garantie applicable à votre produit.

REMARQUE: Certaines pièces Hewlett Packard Enterprise ne sont pas conçues pour permettre au client d'effectuer lui-même la réparation. Pour que la garantie puisse s'appliquer, Hewlett Packard Enterprise exige que le remplacement de la pièce soit effectué par un Mainteneur Agréé. Ces pièces sont identifiées par la mention "Non" dans le Catalogue illustré.

Les pièces CSR sont livrées le jour ouvré suivant, dans la limite des stocks disponibles et selon votre situation géographique. Si votre situation géographique le permet et que vous demandez une livraison le jour même ou dans les 4 heures, celle-ci vous sera facturée. Pour toute assistance, appelez le Centre d'assistance Hewlett Packard Enterprise pour qu'un technicien vous aide au téléphone Dans les documents envoyés avec la pièce de rechange CSR, Hewlett Packard Enterprise précise s'il est nécessaire de lui retourner la pièce défectueuse. Si c'est le cas, vous devez le faire dans le délai indiqué, généralement cinq (5) jours ouvrés. La pièce et sa documentation doivent être retournées dans l'emballage fourni. Si vous ne retournez pas la pièce défectueuse, Hewlett Packard Enterprise se réserve le droit de vous facturer les coûts de remplacement. Dans le cas d'une pièce CSR, Hewlett Packard Enterprise supporte l'ensemble des frais d'expédition et de retour, et détermine la société de courses ou le transporteur à utiliser.

Pour plus d'informations sur le programme CSR de Hewlett Packard Enterprise, contactez votre Mainteneur Agrée local.

Service de garantie "pièces seules"

Votre garantie limitée Hewlett Packard Enterprise peut inclure un service de garantie "pièces seules". Dans ce cas, les pièces de rechange fournies par Hewlett Packard Enterprise ne sont pas facturées.

Dans le cadre de ce service, la réparation des pièces CSR par le client est obligatoire. Si vous demandez à Hewlett Packard Enterprise de remplacer ces pièces, les coûts de déplacement et main d'œuvre du service vous seront facturés.

Riparazione da parte del cliente

Per abbreviare i tempi di riparazione e garantire una maggiore flessibilità nella sostituzione di parti difettose, i prodotti Hewlett Packard Enterprise sono realizzati con numerosi componenti che possono essere riparati direttamente dal cliente (CSR, Customer Self Repair). Se in fase di diagnostica Hewlett Packard Enterprise (o un centro di servizi o di assistenza Hewlett Packard Enterprise) identifica il guasto come riparabile mediante un ricambio CSR, Hewlett Packard Enterprise lo spedirà direttamente al cliente per la sostituzione. Vi sono due categorie

di parti CSR:

- **Obbligatorie**—Parti che devono essere necessariamente riparate dal cliente. Se il cliente ne affida la riparazione ad Hewlett Packard Enterprise, deve sostenere le spese di spedizione e di manodopera per il servizio.
- **Opzionali**—Parti la cui riparazione da parte del cliente è facoltativa. Si tratta comunque di componenti progettati per questo scopo. Se tuttavia il cliente ne richiede la sostituzione ad Hewlett Packard Enterprise, potrebbe dover sostenere spese addizionali a seconda del tipo di garanzia previsto per il prodotto.

NOTA: alcuni componenti Hewlett Packard Enterprise non sono progettati per la riparazione da parte del cliente. Per rispettare la garanzia, Hewlett Packard Enterprise richiede che queste parti siano sostituite da un centro di assistenza autorizzato. Tali parti sono identificate da un "No" nel Catalogo illustrato dei componenti.

In base alla disponibilità e alla località geografica, le parti CSR vengono spedite con consegna entro il giorno lavorativo seguente. La consegna nel giorno stesso o entro quattro ore è offerta con un supplemento di costo solo in alcune zone. In caso di necessità si può richiedere l'assistenza telefonica di un addetto del centro di supporto tecnico Hewlett Packard Enterprise. Nel materiale fornito con una parte di ricambio CSR, Hewlett Packard Enterprise specifica se il cliente deve restituire dei component. Qualora sia richiesta la resa ad Hewlett Packard Enterprise del componente difettoso, lo si deve spedire ad Hewlett Packard Enterprise entro un determinato periodo di tempo, generalmente cinque (5) giorni lavorativi. Il componente difettoso deve essere restituito con la documentazione associata nell'imballo di spedizione fornito. La mancata restituzione del componente può comportare la fatturazione del ricambio da parte di Hewlett Packard Enterprise. Nel caso di riparazione da parte del cliente, Hewlett Packard Enterprise sostiene tutte le spese di spedizione e resa e sceglie il corriere/vettore da utilizzare.

Per ulteriori informazioni sul programma CSR di Hewlett Packard Enterprise, contattare il centro di assistenza di zona.

Servizio di garanzia per i soli componenti

La garanzia limitata Hewlett Packard Enterprise può includere un servizio di garanzia per i soli componenti. Nei termini di garanzia del servizio per i soli componenti, Hewlett Packard Enterprise fornirà gratuitamente le parti di ricambio.

Per il servizio di garanzia per i soli componenti è obbligatoria la formula CSR che prevede la riparazione da parte del cliente. Se il cliente invece richiede la sostituzione ad Hewlett Packard Enterprise dovrà sostenere le spese di spedizione e di manodopera per il servizio.

Customer Self Repair

Hewlett Packard Enterprise Produkte enthalten viele CSR-Teile (Customer Self Repair), um Reparaturzeiten zu minimieren und höhere Flexibilität beim Austausch defekter Bauteile zu ermöglichen. Wenn Hewlett Packard Enterprise (oder ein Hewlett Packard Enterprise Servicepartner) bei der Diagnose feststellt, dass das Produkt mithilfe eines CSR-Teils repariert werden kann, sendet Ihnen Hewlett Packard Enterprise dieses Bauteil zum Austausch direkt zu. CSR-Teile werden in zwei Kategorien unterteilt:

- **Zwingend**—Teile, für die das Customer Self Repair-Verfahren zwingend vorgegeben ist. Wenn Sie den Austausch dieser Teile von Hewlett Packard Enterprise vornehmen lassen, werden Ihnen die Anfahrt- und Arbeitskosten für diesen Service berechnet.
- **Optional**—Teile, für die das Customer Self Repair-Verfahren optional ist. Diese Teile sind auch für Customer Self Repair ausgelegt. Wenn Sie jedoch den Austausch dieser Teile von Hewlett Packard Enterprise vornehmen lassen möchten, können bei diesem Service je nach den für Ihr Produkt vorgesehenen Garantiebedingungen zusätzliche Kosten anfallen.

HINWEIS: Einige Hewlett Packard Enterprise Teile sind nicht für Customer Self Repair ausgelegt. Um den Garantieanspruch des Kunden zu erfüllen, muss das Teil von einem Hewlett Packard Enterprise Servicepartner ersetzt werden. Im illustrierten Teilekatalog sind diese Teile mit „No“ bzw. „Nein“ gekennzeichnet.

CSR-Teile werden abhängig von der Verfügbarkeit und vom Lieferziel am folgenden Geschäftstag geliefert. Für bestimmte Standorte ist eine Lieferung am selben Tag oder innerhalb von vier Stunden gegen einen Aufpreis verfügbar. Wenn Sie Hilfe benötigen, können Sie das Hewlett Packard Enterprise Support Center anrufen und sich von einem Mitarbeiter per Telefon helfen lassen. Den Materialien von Hewlett Packard Enterprise, die mit einem CSR-Ersatzteil geliefert werden, können Sie entnehmen, ob das defekte Teil an Hewlett Packard Enterprise zurückgeschickt werden muss. Wenn es erforderlich ist, das defekte Teil an Hewlett Packard Enterprise zurückzuschicken, müssen Sie dies innerhalb eines vorgegebenen Zeitraums tun, in der Regel innerhalb von fünf (5) Geschäftstagen. Das defekte Teil muss mit der zugehörigen Dokumentation in der Verpackung zurückgeschickt werden, die im Lieferumfang enthalten ist. Wenn Sie das defekte Teil nicht zurückschicken, kann Hewlett Packard Enterprise Ihnen das Ersatzteil in Rechnung stellen. Im Falle von Customer Self Repair kommt Hewlett Packard Enterprise für alle Kosten für die Lieferung und Rücksendung auf und bestimmt den Kurier-/Frachtdienst.

Weitere Informationen über das Hewlett Packard Enterprise Customer Self Repair Programm erhalten Sie von Ihrem Servicepartner vor Ort.

Parts-only Warranty Service (Garantieservice ausschließlich für Teile)

Ihre Hewlett Packard Enterprise Garantie umfasst möglicherweise einen Parts-only Warranty Service (Garantieservice ausschließlich für Teile). Gemäß den Bestimmungen des Parts-only Warranty Service stellt Hewlett Packard Enterprise Ersatzteile kostenlos zur Verfügung.

Für den Parts-only Warranty Service ist das CSR-Verfahren zwingend vorgegeben. Wenn Sie den Austausch dieser Teile von Hewlett

Packard Enterprise vornehmen lassen, werden Ihnen die Anfahrt- und Arbeitskosten für diesen Service berechnet.

Reparaciones del propio cliente

Los productos de Hewlett Packard Enterprise incluyen muchos componentes que el propio usuario puede reemplazar (Customer Self Repair, CSR) para minimizar el tiempo de reparación y ofrecer una mayor flexibilidad a la hora de realizar sustituciones de componentes defectuosos. Si, durante la fase de diagnóstico, Hewlett Packard Enterprise (o los proveedores o socios de servicio de Hewlett Packard Enterprise) identifica que una reparación puede llevarse a cabo mediante el uso de un componente CSR, Hewlett Packard Enterprise le enviará dicho componente directamente para que realice su sustitución. Los componentes CSR se clasifican en dos categorías:

- **Obligatorio**—Componentes cuya reparación por parte del usuario es obligatoria. Si solicita a Hewlett Packard Enterprise que realice la sustitución de estos componentes, tendrá que hacerse cargo de los gastos de desplazamiento y de mano de obra de dicho servicio.
- **Opcional**—Componentes cuya reparación por parte del usuario es opcional. Estos componentes también están diseñados para que puedan ser reparados por el usuario. Sin embargo, si precisa que Hewlett Packard Enterprise realice su sustitución, puede o no conllevar costes adicionales, dependiendo del tipo de servicio de garantía correspondiente al producto.

NOTA: Algunos componentes de Hewlett Packard Enterprise no están diseñados para que puedan ser reparados por el usuario. Para que el usuario haga valer su garantía, Hewlett Packard Enterprise pone como condición que un proveedor de servicios autorizado realice la sustitución de estos componentes. Dichos componentes se identifican con la palabra "No" en el catálogo ilustrado de componentes.

Según la disponibilidad y la situación geográfica, los componentes CSR se enviarán para que lleguen a su destino al siguiente día laborable. Si la situación geográfica lo permite, se puede solicitar la entrega en el mismo día o en cuatro horas con un coste adicional. Si precisa asistencia técnica, puede llamar al Centro de asistencia técnica de Hewlett Packard Enterprise y recibirá ayuda telefónica por parte de un técnico. Con el envío de materiales para la sustitución de componentes CSR, Hewlett Packard Enterprise especificará si los componentes defectuosos deberán devolverse a Hewlett Packard Enterprise. En aquellos casos en los que sea necesario devolver algún componente a Hewlett Packard Enterprise, deberá hacerlo en el periodo de tiempo especificado, normalmente cinco días laborables. Los componentes defectuosos deberán devolverse con toda la documentación relacionada y con el embalaje de envío. Si no enviara el componente defectuoso requerido, Hewlett Packard Enterprise podrá cobrarle por el de sustitución. En el caso de todas sustituciones que lleve a cabo el cliente, Hewlett Packard Enterprise se hará cargo de todos los gastos de envío y devolución de componentes y escogerá la empresa de transporte que se utilice para dicho servicio.

Para obtener más información acerca del programa de Reparaciones del propio cliente de Hewlett Packard Enterprise, póngase en contacto con su proveedor de servicios local.

Servicio de garantía exclusivo de componentes

La garantía limitada de Hewlett Packard Enterprise puede que incluya un servicio de garantía exclusivo de componentes. Según las condiciones de este servicio exclusivo de componentes, Hewlett Packard Enterprise le facilitará los componentes de repuesto sin cargo adicional alguno.

Para este servicio de garantía exclusivo de componentes, es obligatoria la sustitución de componentes por parte del usuario (CSR). Si solicita a Hewlett Packard Enterprise que realice la sustitución de estos componentes, tendrá que hacerse cargo de los gastos de desplazamiento y de mano de obra de dicho servicio.

Customer Self Repair

Veel onderdelen in Hewlett Packard Enterprise producten zijn door de klant zelf te repareren, waardoor de reparatieduur tot een minimum beperkt kan blijven en de flexibiliteit in het vervangen van defecte onderdelen groter is. Deze onderdelen worden CSR-onderdelen (Customer Self Repair) genoemd. Als Hewlett Packard Enterprise (of een Hewlett Packard Enterprise Service Partner) bij de diagnose vaststelt dat de reparatie kan worden uitgevoerd met een CSR-onderdeel, verzendt Hewlett Packard Enterprise dat onderdeel rechtstreeks naar u, zodat u het defecte onderdeel daarmee kunt vervangen. Er zijn twee categorieën CSR-onderdelen:

- **Verplicht**—Onderdelen waarvoor reparatie door de klant verplicht is. Als u Hewlett Packard Enterprise verzoekt deze onderdelen voor u te vervangen, worden u voor deze service reiskosten en arbeidsloon in rekening gebracht.
- **Optioneel**—Onderdelen waarvoor reparatie door de klant optioneel is. Ook deze onderdelen zijn ontworpen voor reparatie door de klant. Als u echter Hewlett Packard Enterprise verzoekt deze onderdelen voor u te vervangen, kunnen daarvoor extra kosten in rekening worden gebracht, afhankelijk van het type garantieservice voor het product.

OPMERKING: Sommige Hewlett Packard Enterprise onderdelen zijn niet ontwikkeld voor reparatie door de klant. In verband met de garantievoorwaarden moet het onderdeel door een geautoriseerde Service Partner worden vervangen. Deze onderdelen worden in de geïllustreerde onderdelencatalogus aangemerkt met "Nee".

Afhankelijk van de leverbaarheid en de locatie worden CSR-onderdelen verzonden voor levering op de eerstvolgende werkdag. Levering op dezelfde dag of binnen vier uur kan tegen meerkosten worden aangeboden, indien dit mogelijk is gezien de locatie. Indien assistentie is gewenst, belt u het Hewlett Packard Enterprise Support Center om via de telefoon ondersteuning van een technicus te ontvangen. Hewlett Packard Enterprise vermeldt in de documentatie bij het vervangende CSR-onderdeel of het defecte onderdeel aan Hewlett Packard Enterprise moet worden geretourneerd. Als het defecte onderdeel aan Hewlett Packard Enterprise moet worden teruggezonden, moet u het

defecte onderdeel binnen een bepaalde periode, gewoonlijk vijf (5) werkdagen, retourneren aan Hewlett Packard Enterprise. Het defecte onderdeel moet met de bijbehorende documentatie worden geretourneerd in het meegeleverde verpakkingsmateriaal. Als u het defecte onderdeel niet terugzendt, kan Hewlett Packard Enterprise u voor het vervangende onderdeel kosten in rekening brengen. Bij reparatie door de klant betaalt Hewlett Packard Enterprise alle verzendkosten voor het vervangende en geretourneerde onderdeel en kiest Hewlett Packard Enterprise zelf welke koerier/transportonderneming hiervoor wordt gebruikt.

Neem contact op met een Service Partner voor meer informatie over het Customer Self Repair programma van Hewlett Packard Enterprise.

Garantieservice "Parts Only"

Het is mogelijk dat de Hewlett Packard Enterprise garantie alleen de garantieservice "Parts Only" omvat. Volgens de bepalingen van de Parts Only garantieservice zal Hewlett Packard Enterprise kosteloos vervangende onderdelen ter beschikking stellen.

Voor de Parts Only garantieservice is vervanging door CSR-onderdelen verplicht. Als u Hewlett Packard Enterprise verzoekt deze onderdelen voor u te vervangen, worden u voor deze service reiskosten en arbeidsloon in rekening gebracht

Reparo feito pelo cliente

Os produtos da Hewlett Packard Enterprise são projetados com muitas peças para reparo feito pelo cliente (CSR) de modo a minimizar o tempo de reparo e permitir maior flexibilidade na substituição de peças com defeito. Se, durante o período de diagnóstico, a Hewlett Packard Enterprise (ou fornecedores/parceiros da Hewlett Packard Enterprise) concluir que o reparo pode ser efetuado pelo uso de uma peça CSR, a Hewlett Packard Enterprise enviará a peça diretamente ao cliente. Há duas categorias de peças CSR:

- **Obrigatória**—Peças cujo reparo feito pelo cliente é obrigatório. Se desejar que a Hewlett Packard Enterprise substitua essas peças, serão cobradas as despesas de transporte e mão-de-obra do serviço.
- **Opcional**—Peças cujo reparo feito pelo cliente é opcional. Essas peças também são projetadas para o reparo feito pelo cliente. No entanto, se desejar que a Hewlett Packard Enterprise as substitua, pode haver ou não a cobrança de taxa adicional, dependendo do tipo de serviço de garantia destinado ao produto.

OBSERVAÇÃO: Algumas peças da Hewlett Packard Enterprise não são projetadas para o reparo feito pelo cliente. A fim de cumprir a garantia do cliente, a Hewlett Packard Enterprise exige que um técnico autorizado substitua a peça. Essas peças estão identificadas com a marca "No" (Não), no catálogo de peças ilustrado.

Conforme a disponibilidade e o local geográfico, as peças CSR serão enviadas no primeiro dia útil após o pedido. Onde as condições geográficas permitirem, a entrega no mesmo dia ou em quatro horas pode ser feita mediante uma taxa adicional. Se precisar de auxílio, entre em contato com o Centro de suporte técnico da Hewlett Packard Enterprise para que um técnico o ajude por telefone. A Hewlett Packard Enterprise especifica nos materiais fornecidos com a peça CSR de reposição se a peça com defeito deve ser devolvida à Hewlett Packard Enterprise. Nos casos em que isso for necessário, é preciso enviar a peça com defeito à Hewlett Packard Enterprise, você deverá enviar a peça com defeito de volta para a Hewlett Packard Enterprise dentro do período de tempo definido, normalmente em 5 (cinco) dias úteis. A peça com defeito deve ser enviada com a documentação correspondente no material de transporte fornecido. Caso não o faça, a Hewlett Packard Enterprise poderá cobrar a reposição. Para as peças de reparo feito pelo cliente, a Hewlett Packard Enterprise paga todas as despesas de transporte e de devolução da peça e determina a transportadora/serviço postal a ser utilizado.

Para obter mais informações sobre o programa de reparo feito pelo cliente da Hewlett Packard Enterprise, entre em contato com o fornecedor de serviços local.

Serviço de garantia apenas para peças

A garantia limitada da Hewlett Packard Enterprise pode incluir um serviço de garantia apenas para peças. Segundo os termos do serviço de garantia apenas para peças, a Hewlett Packard Enterprise fornece as peças de reposição sem cobrar nenhuma taxa.

No caso desse serviço, a substituição de peças CSR é obrigatória. Se desejar que a Hewlett Packard Enterprise substitua essas peças, serão cobradas as despesas de transporte e mão-de-obra do serviço.

カスタマーセルフリペア

修理時間を短縮し、故障部品の交換における高い柔軟性を確保するために、Hewlett Packard Enterprise製品には多数のカスタマーセルフリペア（CSR）部品があります。診断の際に、CSR部品を使用すれば修理ができるとHewlett Packard Enterprise（Hewlett Packard EnterpriseまたはHewlett Packard Enterprise正規保守代理店）が判断した場合、Hewlett Packard Enterpriseはその部品を直接、お客様に発送し、お客様に交換していただきます。CSR部品には以下の2種類があります。

- **必須** - カスタマーセルフリペアが必須の部品。当該部品について、もしもお客様がHewlett Packard Enterpriseに交換作業を依頼される場合には、その修理サービスに関する交通費および人件費がお客様に請求されます。
- **任意** - カスタマーセルフリペアが任意である部品。この部品もカスタマーセルフリペア用です。当該部品について、もしもお客様がHewlett Packard Enterpriseに交換作業を依頼される場合には、お買い上げの製品に適用される保証サービス内容の範囲内においては、別途費用を負担していただくことなく保証サービスを受けることができます。

注：Hewlett Packard Enterprise製品の一部の部品は、カスタマーセルフリペアの対象外です。製品の保証を継続するためには、Hewlett Packard EnterpriseまたはHewlett Packard Enterprise正規保守代理店による交換作業が必須となります。部品カタログには、当該部品がカスタマーセルフリペア除外品である旨が記載されています。

部品供給が可能な場合、地域によっては、CSR部品を翌営業日に届くように発送します。また、地域によっては、追加費用を負担いただくことにより同日または4時間以内に届くように発送することも可能な場合があります。サポートが必要なときは、Hewlett Packard Enterpriseサポートセンターに電話していただければ、技術者が電話でアドバイスします。交換用のCSR部品または同梱物には、故障部品をHewlett Packard Enterpriseに返送する必要があるかどうかが表示されています。故障部品をHewlett Packard Enterpriseに返送する必要がある場合は、指定期限内（通常は5営業日以内）に故障部品をHewlett Packard Enterpriseに返送してください。故障部品を返送する場合は、届いた時の梱包箱に関連書類とともに入れてください。故障部品を返送しない場合、Hewlett Packard Enterpriseから部品費用が請求されます。カスタマーセルフリペアの際には、Hewlett Packard Enterpriseは送料および部品返送費を全額負担し、使用する宅配便会社や運送会社を指定します。

部品のみ保証サービス

Hewlett Packard Enterprise保証サービスには、部品のみ保証サービスが適用される場合があります。このサービスでは、交換部品は無償で提供されます。

部品のみ保証サービスにおいては、CSR部品をお客様により交換作業していただくことが必須になります。当該部品について、もしもお客様がHewlett Packard Enterpriseに交換作業を依頼される場合には、その修理サービスに関する交通費および人件費がお客様のご負担となります。

客户自行维修

Hewlett Packard Enterprise 产品提供许多客户自行维修 (CSR) 部件，以尽可能缩短维修时间和在更换缺陷部件方面提供更大的灵活性。如果在诊断期间 Hewlett Packard Enterprise（或Hewlett Packard Enterprise 服务提供商或服务合作伙伴）确定可以通过使用 CSR 部件完成维修，Hewlett Packard Enterprise 将直接把该部件发送给您进行更换。有两类 CSR 部件：

- **强制性的** — 要求客户必须自行维修的部件。如果您请求 Hewlett Packard Enterprise 更换这些部件，则必须为该服务支付差旅费和人工费用。
- **可选的** — 客户可以选择是否自行维修的部件。这些部件也是为客户自行维修设计的。不过，如果您要求 Hewlett Packard Enterprise 为您更换这些部件，则根据为您的产品指定的保修服务类型，Hewlett Packard Enterprise 可能收取或不再收取任何附加费用。

注：某些 Hewlett Packard Enterprise 部件的设计并未考虑客户自行维修。为了满足客户保修的需要，Hewlett Packard Enterprise 要求授权服务提供商更换相关部件。这些部件在部件图解目录中标记为“否”。

CSR 部件将在下一个工作日发运（取决于备货情况和允许的地理范围）。在允许的地理范围内，可在当天或四小时内发运，但要收取额外费用。如果需要帮助，您可以致电 Hewlett Packard Enterprise 技术支持中心，将会有技术人员通过电话为您提供帮助。Hewlett Packard Enterprise 会在随更换的 CSR 部件发运的材料中指明是否必须将有缺陷的部件返还给 Hewlett Packard Enterprise。如果要求您将有缺陷的部件返还给 Hewlett Packard Enterprise，那么您必须在规定的期限内（通常是五 (5) 个工作日）将缺陷部件发给 Hewlett Packard Enterprise。有缺陷的部件必须随所提供的发运材料中的相关文件一起返还。如果未能送还有缺陷的部件，Hewlett Packard Enterprise 可能会要求您支付更换费用。客户自行维修时，Hewlett Packard Enterprise 将承担所有相关运输和部件返回费用，并指定快递商/承运商。

有关 Hewlett Packard Enterprise 客户自行维修计划的详细信息，请与您当地的服务提供商联系。

仅部件保修服务

您的 Hewlett Packard Enterprise 有限保修服务可能涉及仅部件保修服务。根据仅部件保修服务条款的规定，Hewlett Packard Enterprise 将免费提供更换的部件。

仅部件保修服务要求进行 CSR 部件更换。如果您请求 Hewlett Packard Enterprise 更换这些部件，则必须为该服务支付差旅费和人工费用。

客戶自行維修

Hewlett Packard Enterprise 產品設計了許多「客戶自行維修」(CSR) 的零件以減少維修時間，並且使得更換瑕疵零件時能有更大的彈性。如果在診斷期間，Hewlett Packard Enterprise (或 Hewlett Packard Enterprise 服務供應商或維修夥伴) 辨認出此項維修工作可以藉由使用 CSR 零件來完成，則 Hewlett Packard Enterprise 將直接寄送該零件給您作更換。CSR 零件分為兩種類別：

- **強制的** — 客戶自行維修所使用的零件是強制性的。如果您要求 Hewlett Packard Enterprise 更換這些零件，Hewlett Packard Enterprise 將會向您收取此服務所需的外出費用與勞動成本。
- **選購的** — 客戶自行維修所使用的零件是選購的。這些零件也設計用於客戶自行維修之用。不過，如果您要求 Hewlett Packard Enterprise 為您更換，則可能需要也可能不需要負擔額外的費用，端視針對此產品指定的保固服務類型而定。

備註：某些 Hewlett Packard Enterprise 零件沒有消費者可自行維修的設計。為符合客戶保固，Hewlett Packard Enterprise 需要授權的服務供應商更換零件。這些零件在圖示的零件目錄中，被標示為「否」。

基於材料取得及環境允許的情況下，CSR 零件將於下一個工作日以快遞寄送。在環境的允許下當天或四小時內送達，則可能需要額外的費用。若您需要協助，可致電 Hewlett Packard Enterprise 支援中心，會有一位技術人員透過電話來協助您。不論損壞的零件是否必須退回，Hewlett Packard Enterprise 皆會在與 CSR 替換零件一起運送的材料中註明。若要將損壞的零件退回 Hewlett Packard Enterprise，您必須在指定的一段時間內 (通常為五 (5) 個工作天)，將損壞的零件寄回 Hewlett Packard Enterprise。損壞的零件必須與寄送資料中隨附的相關技術文件一併退還。如果無法退還損壞的零件，Hewlett Packard Enterprise 可能要向您收取替換費用。針對客戶自行維修情形，Hewlett Packard Enterprise 將負責所有運費及零件退還費用，並指定使用何家快遞/貨運公司。

如需 Hewlett Packard Enterprise 的 CSR 方案詳細資訊，請連絡您當地的服務供應商。

僅限零件的保固服務

您的「Hewlett Packard Enterprise 有限保固」可能包含僅限零件的保固服務。在僅限零件的保固服務情況下，Hewlett Packard Enterprise 將免費提供替換零件。

針對僅限零件的保固服務，CSR 零件替換是強制性的。如果您要求 Hewlett Packard Enterprise 更換這些零件，Hewlett Packard Enterprise 將會向您收取此服務所需的外出費用與勞動成本。

고객 셀프 수리

Hewlett Packard Enterprise 제품은 수리 시간을 최소화하고 결함이 있는 부품 교체 시 더욱 융통성을 발휘할 수 있도록 하기 위해 고객 셀프 수리(CSR) 부품을 다량 사용하여 설계되었습니다. 진단 기간 동안 Hewlett Packard Enterprise(또는 Hewlett Packard Enterprise 서비스 공급업체 또는 서비스 협력업체)에서 CSR 부품을 사용하여 수리가 가능하다고 판단되면 Hewlett Packard Enterprise는 해당 부품을 바로 사용자에게 보내어 사용자가 교체할 수 있도록 합니다. CSR 부품에는 두 가지 종류가 있습니다.

- **필수** - 고객 셀프 수리가 의무 사항인 필수 부품. 사용자가 Hewlett Packard Enterprise에 이 부품의 교체를 요청할 경우 이 서비스에 대한 출장비 및 작업비가 청구됩니다.
- **선택 사항** - 고객 셀프 수리가 선택 사항인 부품. 이 부품들도 고객 셀프 수리가 가능하도록 설계되었습니다. 하지만 사용자가 Hewlett Packard Enterprise에 이 부품의 교체를 요청할 경우 사용자가 구입한 제품에 해당하는 보증 서비스 유형에 따라 추가 비용 없이 교체가 가능할 수 있습니다.

참고: 일부 Hewlett Packard Enterprise 부품은 고객 셀프 수리가 불가능하도록 설계되었습니다. Hewlett Packard Enterprise는 만족스러운 고객 보증을 위해 공인 서비스 제공업체를 통해 부품을 교체하도록 하고 있습니다. 이러한 부품들은 Illustrated Parts Catalog에 "No"라고 표시되어 있습니다.

CSR 부품은 재고 상태와 지리적 조건이 허용하는 경우 다음 영업일 납품이 가능하도록 배송이 이루어집니다. 지리적 조건이 허용하는 경우 추가 비용이 청구되는 조건으로 당일 또는 4시간 배송이 가능할 수도 있습니다. 도움이 필요하시면 Hewlett Packard Enterprise Support Center로 전화하십시오. 전문 기술자가 전화로 도움을 줄 것입니다. Hewlett Packard Enterprise는 결함이 발생한 부품을 Hewlett Packard Enterprise로 반환해야 하는지 여부를 CSR 교체 부품과 함께 배송된 자료에 지정합니다. 결함이 발생한 부품을 Hewlett Packard Enterprise로 반환해야 하는 경우에는 지정된 기간 내(통상 영업일 기준 5일)에 Hewlett Packard Enterprise로 반환해야 합니다. 이때 결함이 발생한 부품은 제공된 포장 재료에 넣어 관련 설명서와 함께 반환해야 합니다. 결함이 발생한 부품을 반환하지 않는 경우 Hewlett Packard Enterprise가 교체 부품에 대해 비용을 청구할 수 있습니다. 고객 셀프 수리의 경우, Hewlett Packard Enterprise는 모든 운송 및 부품 반환 비용을 부담하며 이용할 운송업체 및 택배 서비스를 결정합니다.

Hewlett Packard Enterprise CSR 프로그램에 대한 자세한 내용은 가까운 서비스 제공업체에 문의하십시오.

부품 제공 보증 서비스

Hewlett Packard Enterprise 제한 보증에는 부품 제공 보증 서비스가 포함될 수 있습니다. 이러한 경우 Hewlett Packard Enterprise는 부품 제공 보증 서비스의 조건에 따라 교체 부품만을 무료로 제공합니다.

부품 제공 보증 서비스 제공 시 CSR 부품 교체는 의무 사항입니다. 사용자가 Hewlett Packard Enterprise에 이 부품의 교체를 요청할 경우 이 서비스에 대한 출장비 및 작업비가 청구됩니다.

Removal and replacement procedures

This chapter provides detailed instructions on how to remove and replace component spare parts.

Subtopics

Safety considerations
Preparation procedures
Removing and replacing the front bezel
Removing and replacing a hot-plug SAS, SATA or NVMe drive
Removing and replacing a drive blank
Removing and replacing the cable management arm
Removing and replacing a power supply
Removing and replacing a power supply blank
Removing and replacing the rack rails
Removing and replacing the hot-plug fan
Removing and replacing the fan power cable

Removing and replacing the air baffle
Removing and replacing the 8 SFF drive backplane
Removing and replacing an LFF drive backplane
Removing and replacing the 2 SFF rear drive backplane
Removing and replacing an energy pack
Removing and replacing an energy pack holder
Removing and replacing a DIMM
Removing and replacing a heatsink
Removing and replacing a processor
Removing and replacing a type-a modular storage controller
Removing and replacing an expansion board
Removing and replacing the M.2 SATA SSD add-in card
Removing and replacing the M.2 SATA SSD from the add-in card
Removing and replacing a PCIe riser board
Removing and replacing the HPE NS204i-p NVMe OS Boot Device option
Removing and replacing the Pensando DSP DSC-25 2p SFP28 card
Removing and replacing an accelerator
Removing and replacing the LFF bezel ear
Removing and replacing the SFF front I/O module
Removing and replacing the bezel ear
Removing and replacing the chassis intrusion detection switch
Removing and replacing the OCP NIC 3.0 adapter
Removing and replacing the serial port
System battery replacement
System board replacement
HPE Trusted Platform Module 2.0 Gen10 Plus option

Safety considerations

Before performing service procedures, review all the safety information.

- Electrostatic discharge
- Symbols on equipment
- Rack warnings and cautions
- Server warnings and cautions

Subtopics

Electrostatic discharge
Symbols on equipment
Rack warnings and cautions
Server warnings and cautions

Electrostatic discharge

Be aware of the precautions you must follow when setting up the system or handling components. A discharge of static electricity from a finger or other conductor may damage system boards or other static-sensitive devices. This type of damage may reduce the life expectancy of the system or component.

To prevent electrostatic damage:

- Avoid hand contact by transporting and storing products in static-safe containers.

- Keep electrostatic-sensitive parts in their containers until they arrive at static-free workstations.
- Place parts on a grounded surface before removing them from their containers.
- Avoid touching pins, leads, or circuitry.
- Always be properly grounded when touching a static-sensitive component or assembly. Use one or more of the following methods when handling or installing electrostatic-sensitive parts:
  - Use a wrist strap connected by a ground cord to a grounded workstation or computer chassis. Wrist straps are flexible straps with a minimum of 1 megohm ±10 percent resistance in the ground cords. To provide proper ground, wear the strap snug against the skin.
  - Use heel straps, toe straps, or boot straps at standing workstations. Wear the straps on both feet when standing on conductive floors or dissipating floor mats.
  - Use conductive field service tools.
  - Use a portable field service kit with a folding static-dissipating work mat.

  If you do not have any of the suggested equipment for proper grounding, have an authorized reseller install the part.

For more information on static electricity or assistance with product installation, contact an authorized reseller.

Symbols on equipment

The following symbols may be placed on equipment to indicate the presence of potentially hazardous conditions:



This symbol in conjunction with any of the following symbols indicates the presence of a potential hazard. The potential for injury exists if warnings are not observed. Consult your documentation for specific details.

該符號與以下任意符號組合使用，指示存在潛在的危險。如果不遵守警告，可能會造成人身傷害。詳細信息請參閱相關文檔。



This symbol indicates the presence of hazardous energy circuits or electric shock hazards. Refer all servicing to qualified personnel.



WARNING

To reduce the risk of injury from electric shock hazards, do not open this enclosure. Refer all maintenance, upgrades, and servicing to qualified personnel.

此符號表明存在危險電路或觸電的危險。所有維修工作應由具有相關資格的人員來完成。
警告：為了減少觸電造成人身傷害的危險，請不要打開此外殼。所有維護、升級和維修工作都應由具有相關資格的人員來完成。



This symbol indicates the presence of electric shock hazards. The area contains no user or field-serviceable parts. Do not open for any reason.

WARNING

To reduce risk of injury from electric shock hazards, do not open this enclosure.

此符號表明存在觸電的危險。在這一區域內沒有用戶可以現場維修的部件。一定不要打開。警告：為了減少觸電造成人身傷害的危險，請不要打開此外殼。



This symbol on an RJ-45 receptacle indicates a Network Interface Connection.

WARNING

To reduce risk of electric shock, fire, or damage to the equipment, do not plug telephone or telecommunications connectors into this receptacle.

RJ-45 插孔上的該符號指示網絡接口連接。
警告：為了減少觸電、火災或設備損壞的危險，不要將電話或電信連接設備插入此插孔。



This symbol indicates the presence of a hot surface or hot component. If this surface is contacted, the potential for injury exists.

WARNING

To reduce the risk of injury from a hot component, allow the surface to cool before touching.

此符號表明表面或組件過熱。如果觸摸此表面，可能會造成人身傷害。警告：為了減少因組件過熱而造成人身傷害的危險，應等到表面降溫後再觸摸。



This symbol indicates the presence of a moving fan blade. If the spinning blades are contacted, the potential for injury exists.

WARNING

Hazardous moving parts. Keep away from moving fan blades. To reduce the risk of injury from a hot component, allow the surface to cool before touching.

此符號表明存在運動風扇葉片的危險。如果觸摸旋轉葉片，可能會造成人身傷害。警告：危險的運動部件。請遠離運動風扇刀片。為減少被高溫組件燙傷的危險，應在表面冷卻之後再接觸。

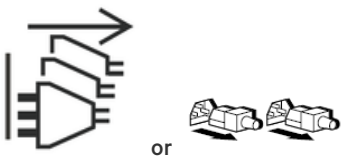

These symbols on power supplies or systems indicate that the equipment is supplied by multiple sources of power.

WARNING

To reduce the risk of injury from electric shock, remove all power cords to completely disconnect power from the system.

電源或系統上的這些符號表明設備由多個電源供電。
警告：為了減少觸電造成人身傷害的危險，應拔下所有電源線插頭，完全斷開系統的電源。



Weight in kg.
Weight in lb.

This symbol indicates that the component exceeds the recommended weight for one individual to handle safely.

WARNING

To reduce the risk of personal injury or damage to the equipment, observe local occupational health and safety requirements and guidelines for manual material handling.

此符號表明組件的重量超出了建議值，一個人無法安全取放。
警告：為了減少人身傷害或設備損壞的危險，應遵守當地有關人工取放物品的職業保健與安全規定及準則。



A discharge of static electricity from a finger or other conductor may damage system boards or other static-sensitive devices. To prevent damage, observe antistatic precautions.

手指或其它導體所釋放的靜電可能損壞主板或其它對靜電敏感的設備。為防止發生損壞，請遵守防靜電預防措施。



This symbol indicates the presence of a laser device in the product that may exceed Class 1 limits. Refer to the product documentation for more information.

此符號表明在可能會超出 1 類限制的產品中存在激光設備。有關詳細信息，請參閱產品文檔。



This symbol indicates the presence of moving parts inside the product that may present a pinch point if improperly contacted.

WARNING

Hazardous moving parts. Do not insert any tools or any part of your body into the product while it is operating or in any openings.

Rack warnings and cautions

WARNING

When all components are removed, the server weighs 12.57 kg (27.71 lb). When all components are installed, the server can weigh up to 26.28 kg (57.94 lb).

Before configuring your rack solution, be sure to check the rack manufacturer weight limits and specifications. Failure to do so can result in physical injury or damage to the equipment and the facility.

WARNING

The server is heavy. To reduce the risk of personal injury or damage to the equipment, do the following:

- Observe local occupational health and safety requirements and guidelines for manual material handling.
- Get help to lift and stabilize the product during installation or removal, especially when the product is not fastened to the rails. The server weighs more than 12.57 kg (27.71 lb), so at least two people must lift the server into the enclosure together. An additional person may be required to help align the server if the server is installed higher than chest level.
- Use caution when installing the server in or removing the server from the enclosure.
- Adequately stabilized the enclosure before extending a component outside the enclosure. Extend only one component at a time. A enclosure may become unstable if more than one component is extended.
- Do not stack anything on top of rail-mounted component or use it as a work surface when extended from the rack.

WARNING

To reduce the risk of personal injury or damage to the equipment, be sure that:

- The rack has anti-tip measures in place. Such measures include floor-bolting, anti-tip feet, ballast, or a combination as specified by the rack manufacturer and applicable codes.
- The leveling jacks (feet) are extended to the floor.
- The full weight of the rack rests on the leveling jacks (feet).
- The stabilizing feet are attached to the rack if it is a single-rack installation.
- The racks are coupled together in multiple rack installations.

WARNING

To reduce the risk of personal injury or equipment damage when unloading a rack:

- At least two people are needed to safely unload the rack from the pallet. An empty 42U rack can weigh as much as 115 kg (253 lb), can stand more than 2.1 m (7 ft) tall, and might become unstable when being moved on its casters.
- Never stand in front of the rack when it is rolling down the ramp from the pallet. Always handle the rack from both sides.

CAUTION

Always plan the rack installation so that the heaviest item is on the bottom of the rack. Install the heaviest item first, and continue to populate the rack from the bottom to the top.

CAUTION

Before installing the server in a enclosure, be sure to properly scope the limitations of the enclosure. Before proceeding with the installation, consider the following:

- You must fully understand the static and dynamic load carrying capacity of the enclosure and be sure that it can accommodate the weight of the server.
- Be sure sufficient clearance exists for cabling, installation and removal of the server, and movement of the rack doors.

Server warnings and cautions

WARNING

To reduce the risk of personal injury, electric shock, or damage to the equipment, disconnect the power cord to remove power from the server. Pressing the Power On/Standby button does not shut off system power completely. Portions of the power supply and some internal circuitry remain active until AC power is removed.

WARNING

To reduce the risk of personal injury from hot surfaces, allow the drives and the internal system components to cool before touching them.

WARNING

To reduce the risk of fire or burns after removing the energy pack:

- Do not disassemble, crush, or puncture the energy pack.
- Do not short external contacts.
- Do not dispose of the energy pack in fire or water.
- Do not expose the energy pack to low air pressure as it might lead to explosion or leakage of flammable liquid or gas.
- Do not expose the energy pack to temperatures higher than 60°C (140°F).

After power is disconnected, battery voltage might still be present for 1s to 160s.

CAUTION

Protect the from power fluctuations and temporary interruptions with a regulating UPS. This device protects the hardware from damage caused by power surges and voltage spikes and keeps the in operation during a power failure.

CAUTION

To prevent damage to electrical components, properly ground the server before beginning any installation, removal, or replacement procedure. Improper grounding can cause electrostatic discharge.

CAUTION

To avoid data loss, Hewlett Packard Enterprise recommends that you back up all server data before installing or removing a hardware option, or performing a server maintenance or troubleshooting procedure.

CAUTION
Do not operate the server for long periods with the access panel open or removed. Operating the server in this manner results in improper airflow and improper cooling that can lead to thermal damage.

Preparation procedures

Prerequisites

Before powering down the server for an upgrade, maintenance, or service procedure, perform a backup of critical server data and programs.

About this task

To access components and perform certain upgrade, maintenance, or service procedure, you must perform one or more of the procedures described in this section.

Subtopics

Power down the server
Power up the server
Extending the server from the rack
Removing the server from the rack
Remove the access panel
Removing the fan cage
Removing a riser cage
Install the access panel
Releasing the cable management arm
Releasing the full-length expansion board retainer

Power down the server

Before powering down the server for any upgrade or maintenance procedures, perform a backup of critical server data and programs.

IMPORTANT
When the server is in standby mode, auxiliary power is still being provided to the system.

To power down the server, use one of the following methods:

- Press and release the Power On/Standby button.
  This method initiates a controlled shutdown of applications and the OS before the server enters standby mode.
- Press and hold the Power On/Standby button for more than 4 seconds to force the server to enter standby mode.
  This method forces the server to enter standby mode without properly exiting applications and the OS. If an application stops responding, you can use this method to force a shutdown.
- Use a virtual power button selection through iLO 5.
  This method initiates a controlled remote shutdown of applications and the OS before the server enters standby mode.

Before proceeding, verify that the server is in standby mode by observing that the system power LED is amber.

Power up the server

About this task

To power up the server, use one of the following methods:

- Press the Power On/Standby button.
- Use the virtual power button through iLO 5.

Extending the server from the rack

About this task

WARNING

To reduce the risk of personal injury or equipment damage, be sure that the rack is adequately stabilized before extending anything from the rack.

Procedure

1. Pull down the quick release levers on each side of the server.
2. If necessary, use a T-25 Torx screwdriver to loosen the shipping screws.
3. Extend the server from the rack.

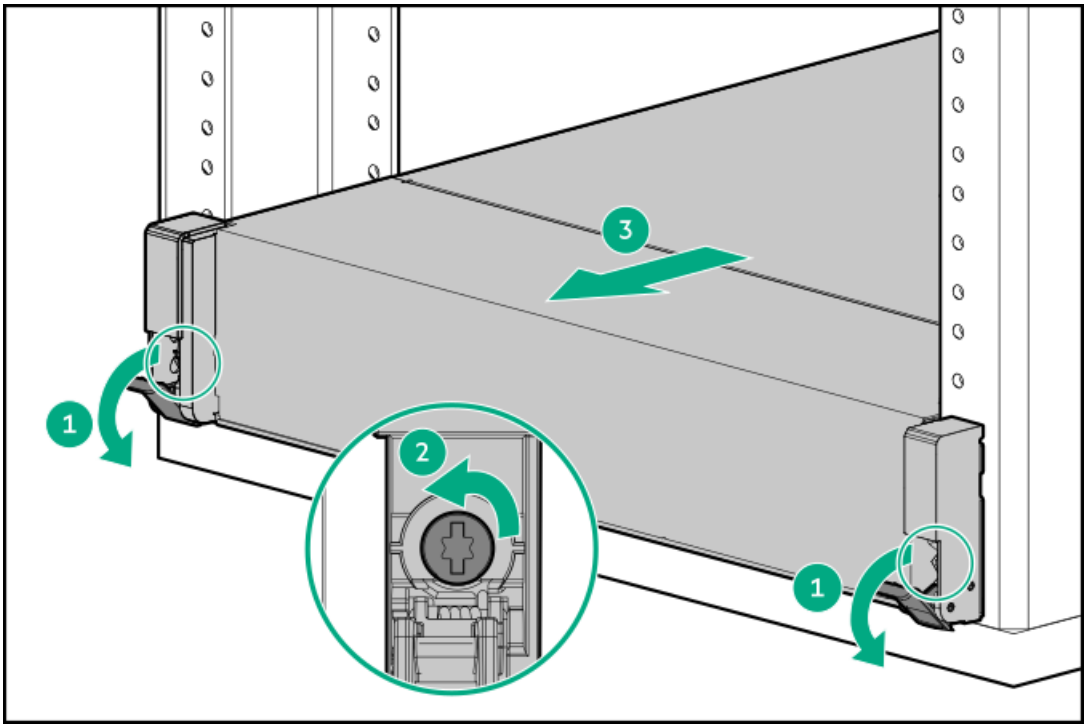

Removing the server from the rack

Prerequisites

Before you perform this procedure, review the:

- Rack warnings and cautions

- Server warnings and cautions
- A fully populated chassis is heavy. Hewlett Packard Enterprise recommends removing the external chassis components before removing the chassis from the rack.

Procedure

1. If installed, remove the front bezel.
2. Power down the server.
3. Remove all power:
   a. Disconnect each power cord from the power source.
   b. Disconnect each power cord from the server.
4. Disconnect all peripheral cables from the server.
5. Extend the server from the rack.
6. Remove the server from the rack.

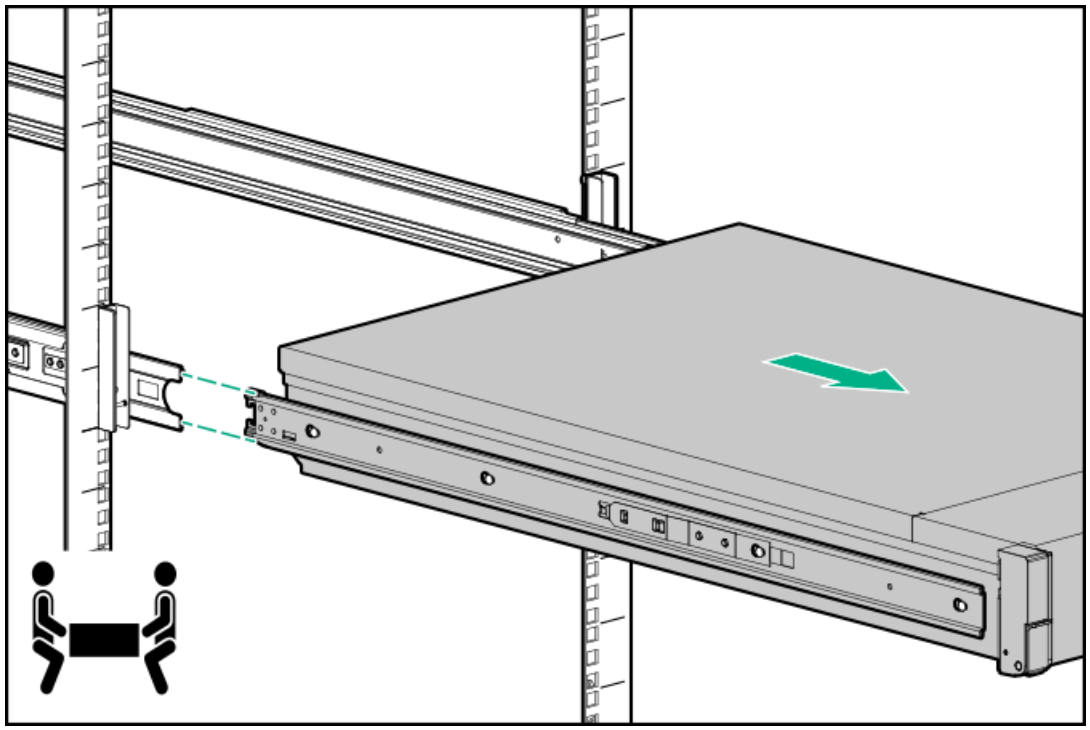

7. Place the server on a sturdy, level surface.

Remove the access panel

About this task

https://www.hpe.com/support/video-dl345gen10plus-replacing-access-panel

WARNING
To reduce the risk of personal injury from hot surfaces, allow the drives, power supplies, and internal system components to cool before touching them.

CAUTION

Do not operate the chassis for long periods with the access panel open or removed. Operating the chassis in this manner results in improper airflow and improper cooling that can lead to thermal damage.

Procedure

1. Power down the server.
2. If installed, release the cable management arm.
3. Remove all power:
   a. Disconnect each power cord from the power source.
   b. Disconnect each power cord from the server.
4. Do one of the following:
   - Extend the server from the rack.
   - Remove the server from the rack.
5. Open or unlock the locking latch, slide the access panel to the rear of the chassis, and remove the access panel.

Removing the fan cage

Procedure

1. Power down the server.
2. If installed, release the cable management arm.
3. Remove all power:
   a. Disconnect each power cord from the power source.
   b. Disconnect each power cord from the server.
4. Do one of the following:
   - Extend the server from the rack.
   - Remove the server from the rack.
5. Remove the access panel.
6. Remove the fan cage.

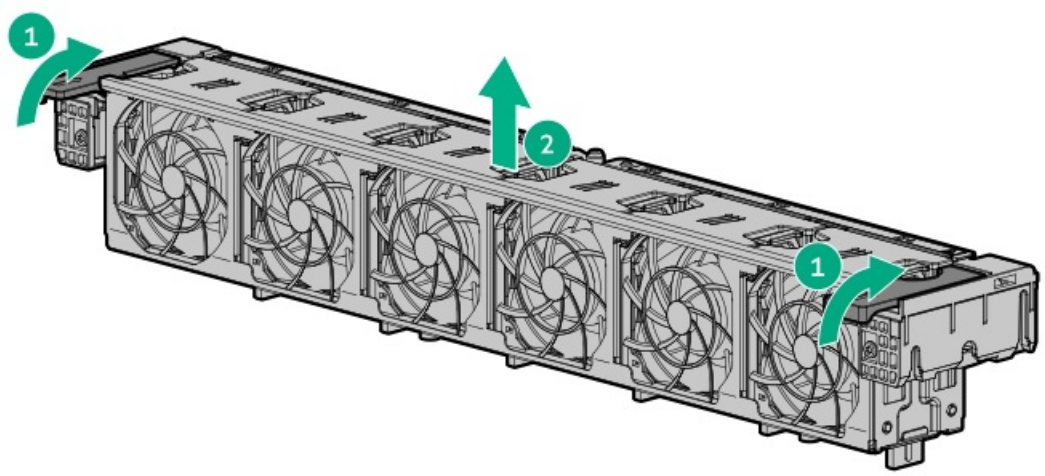

Results

To replace the component, reverse the removal procedure.

Removing a riser cage

About this task

https://www.hpe.com/support/video-dl345gen10plus-replacing-primary-riser-cage

https://www.hpe.com/support/video-dl345gen10plus-replacing-secondary-riser-cage

Procedure

1. Power down the server.
2. If installed, release the cable management arm .
3. Remove all power:
   a. Disconnect each power cord from the power source.
   b. Disconnect each power cord from the server.
4. Do one of the following:
   - Extend the server from the rack .
   - Remove the server from the rack .
5. Remove the access panel.
6. Do one of the following:
   - If an expansion card with internal cables is installed on the riser, disconnect the cables from the card.
   - If cables are connected to the riser SlimSAS ports, disconnect the cables.
7. When the rear 2 SFF drive option is mounted on the secondary riser cage, disconnect the 2 SFF drive backplane cables.
8. Remove the riser cage:
   - Primary riser cage

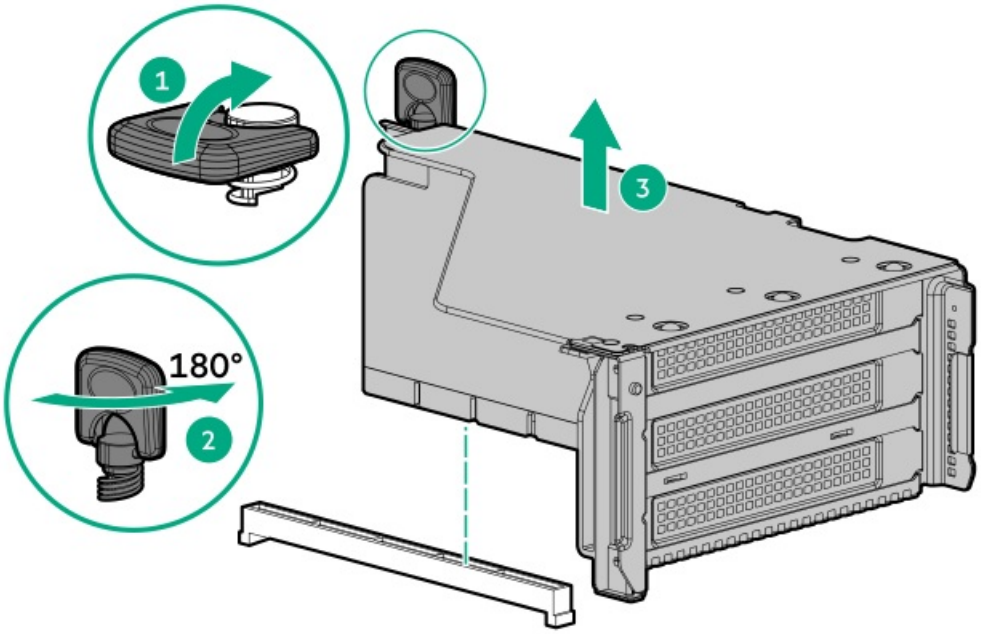

- Secondary riser cage

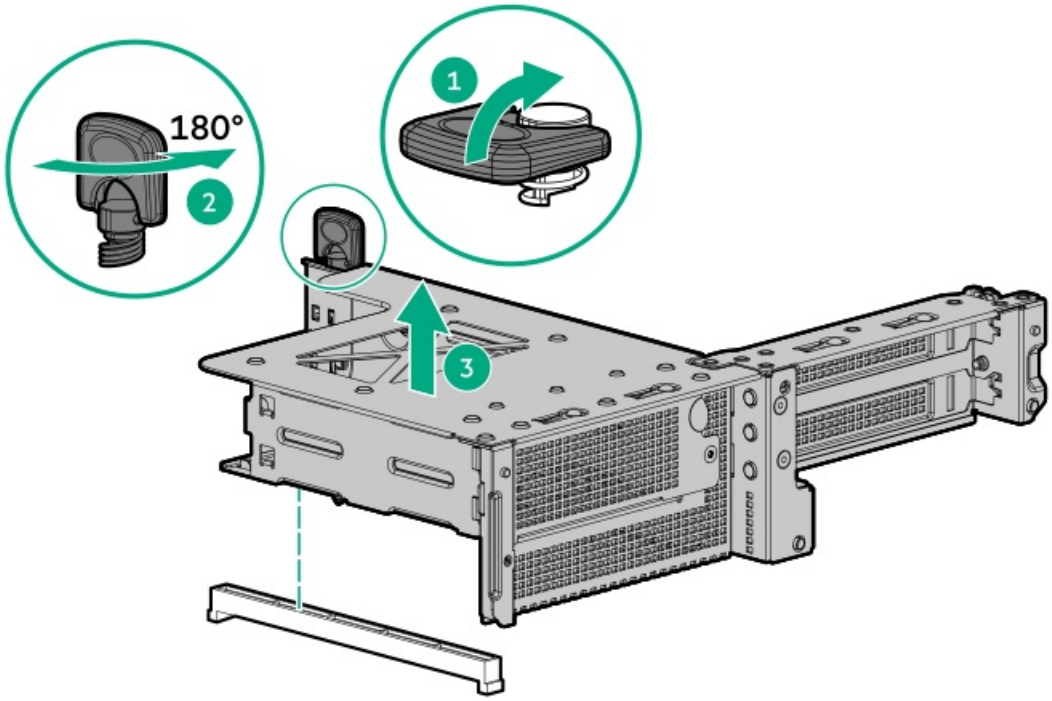

Install the access panel

Procedure

1. Place the access panel on top of the server with the latch open.

   Allow the panel to extend past the rear of the server approximately 1.25 cm (0.5 in).

2. Push down on the latch.

The access panel slides to a closed position.

3. Tighten the security screw on the latch, if needed.

Releasing the cable management arm

About this task

Release the cable management arm and then swing the arm away from the rack.

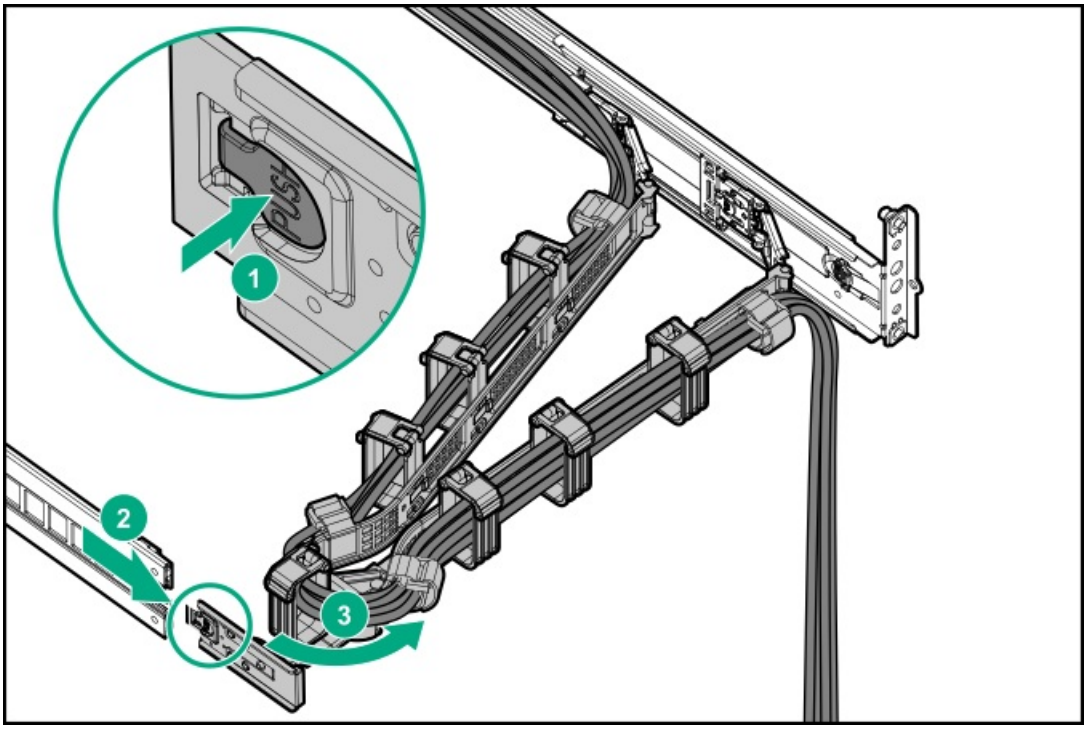

Releasing the full-length expansion board retainer

Procedure

1. Power down the server.
2. Remove all power:
   a. Disconnect each power cord from the power source.
   b. Disconnect each power cord from the server.
3. Do one of the following:
   - Extend the server from the rack.
   - Remove the server from the rack.
4. Remove the access panel.
5. Release the full-length expansion board retainer.

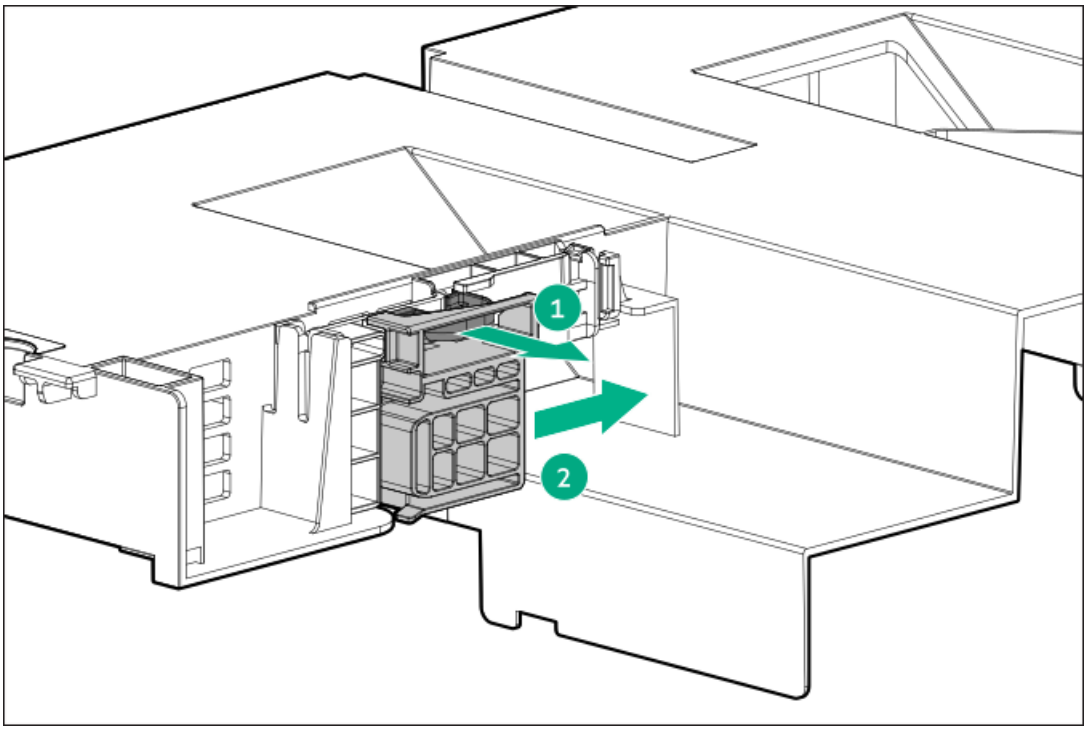

Results

To replace the component, reverse the removal procedure.

Removing and replacing the front bezel

Procedure

1. If installed, remove the Kensington security lock.

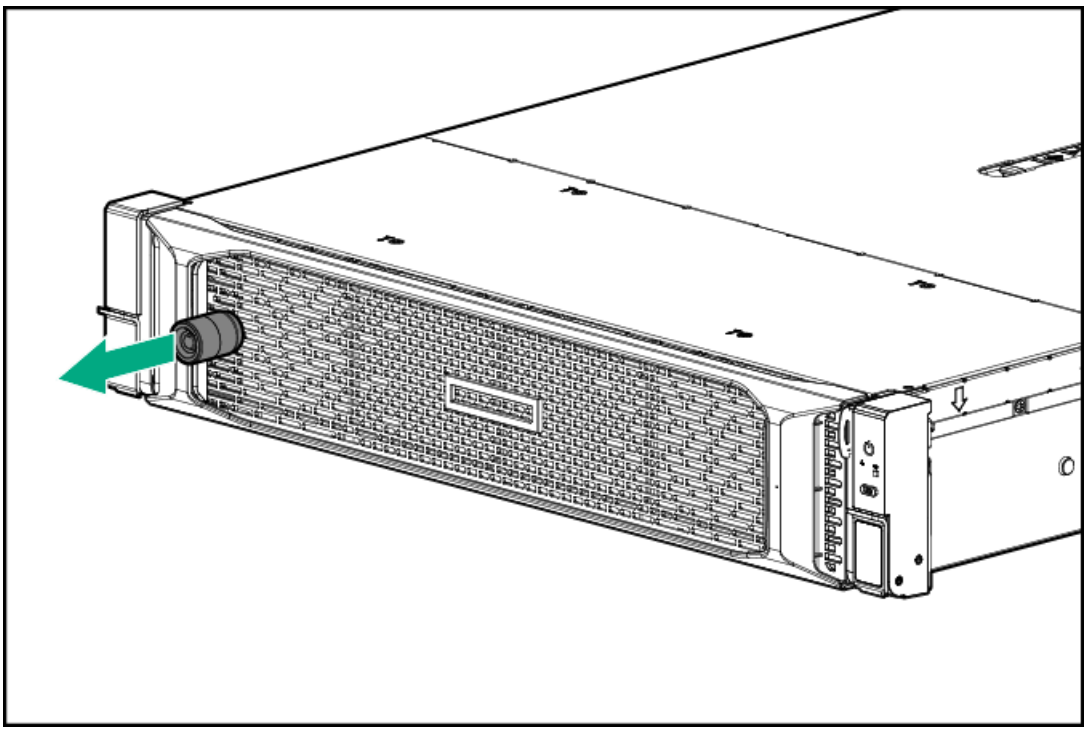

2. Remove the front bezel.

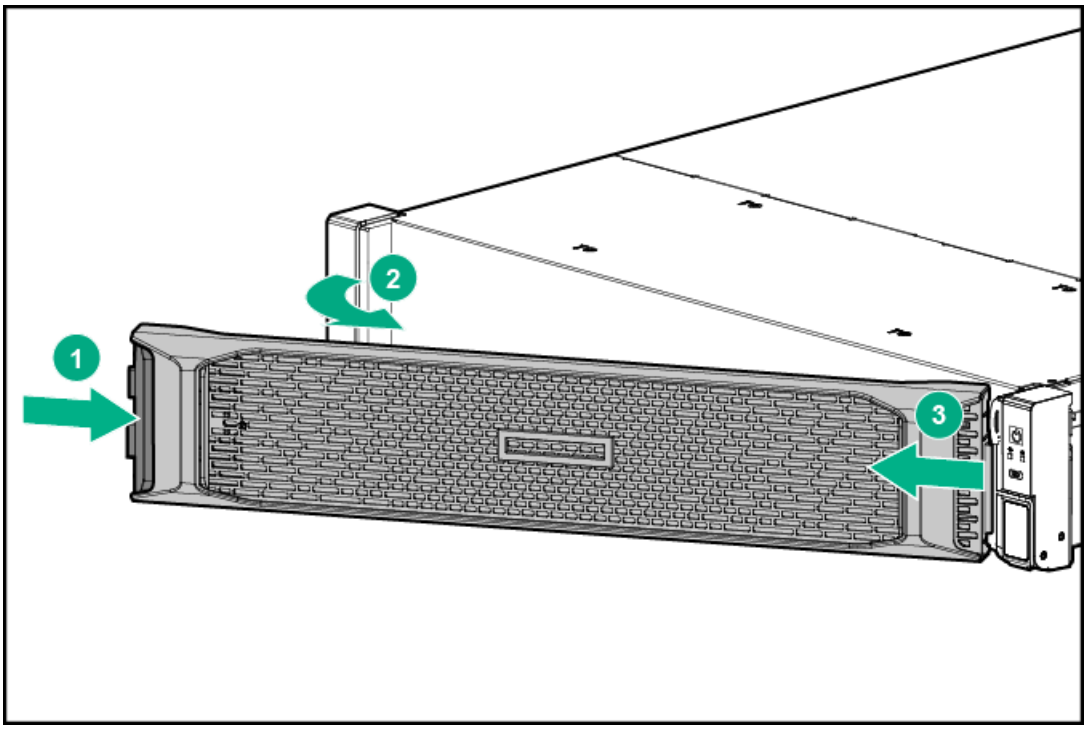

Results

To replace the component, reverse the removal procedure.

Removing and replacing a hot-plug SAS, SATA or NVMe drive

About this task

CAUTION

To prevent improper cooling and thermal damage, do not operate the server unless all bays are populated with either a component or a blank.

Procedure

1. Back up all server data on the drive.
2. If installed, remove the front bezel.
3. Observe the drive LED status and determine if it can be removed.
4. Remove the drive.
   - LFF drive

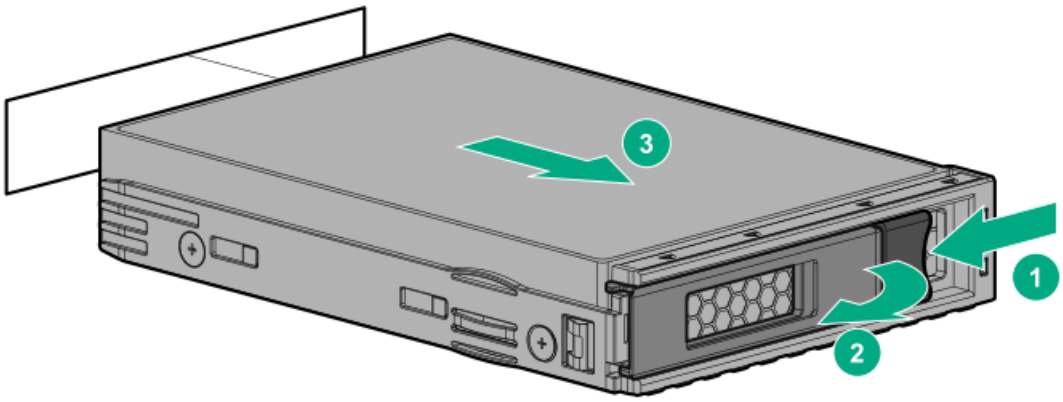

- SFF drive

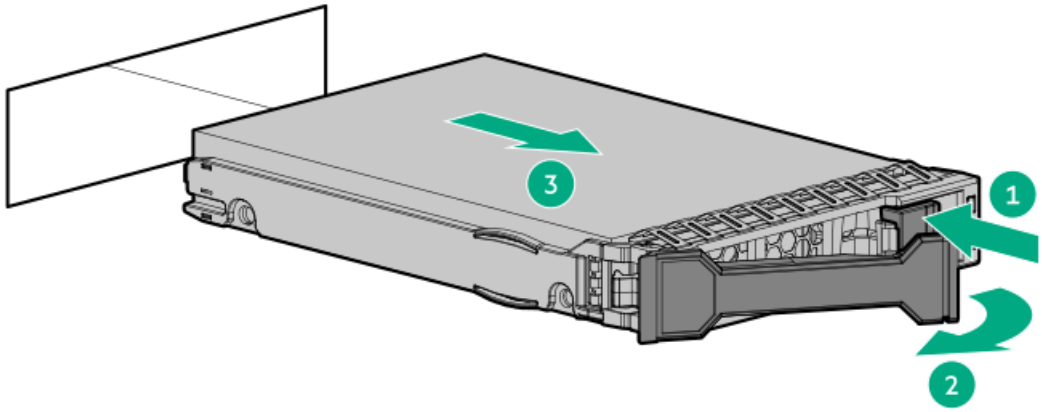

Results

To replace the component, reverse the removal procedure.

Removing and replacing a drive blank

About this task

CAUTION

To prevent improper cooling and thermal damage, do not operate the server unless all bays are populated with either a component or a blank.

Procedure

1. If installed, remove the front bezel.
2. Remove the drive blank.
   - LFF drive blank

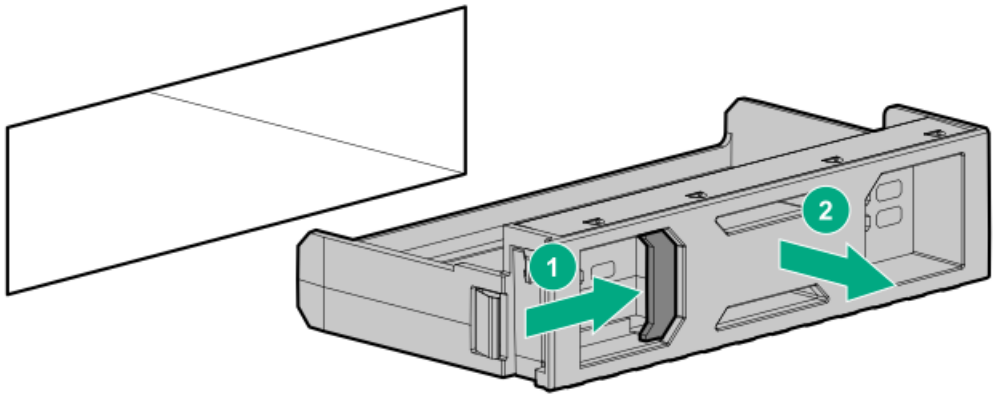

- SFF drive blank

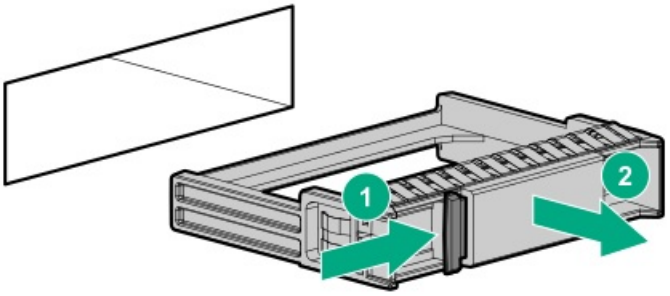

Results

To replace the component, reverse the removal procedure.

Removing and replacing the cable management arm

Procedure

1. Power down the server.
2. Remove all power:
   a. Disconnect each power cord from the power source.
   b. Disconnect each power cord from the server.
3. Extend the server from the rack.
4. Remove the cables from the cable management arm.

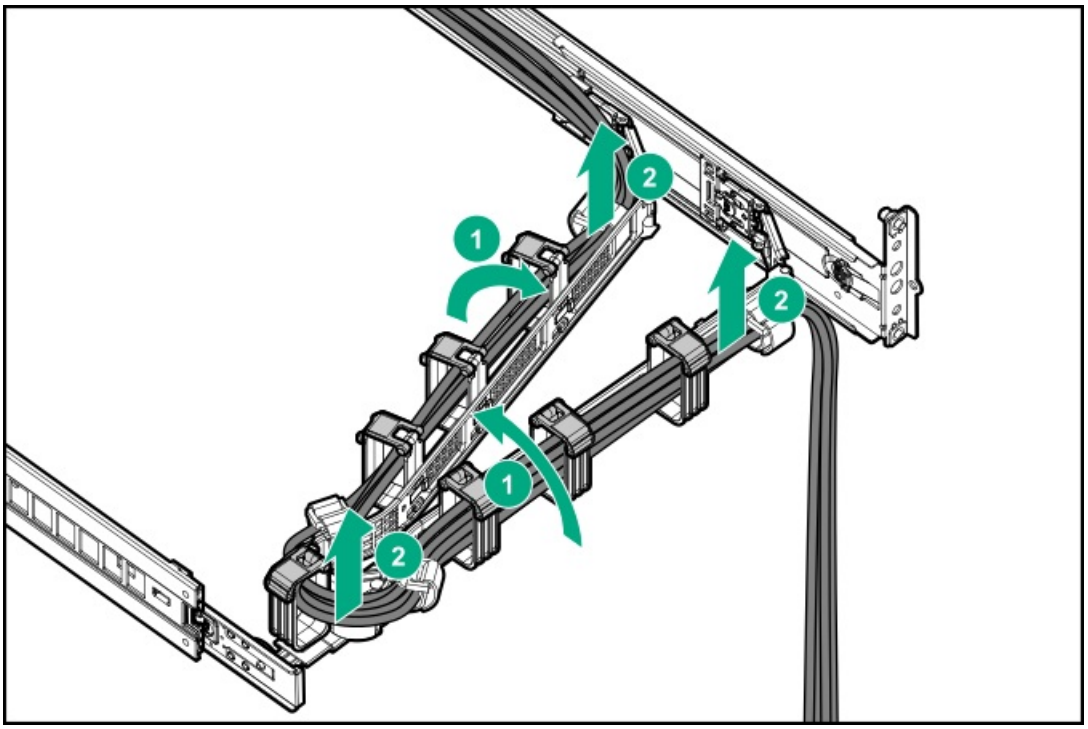

5. Remove the cable management arm.

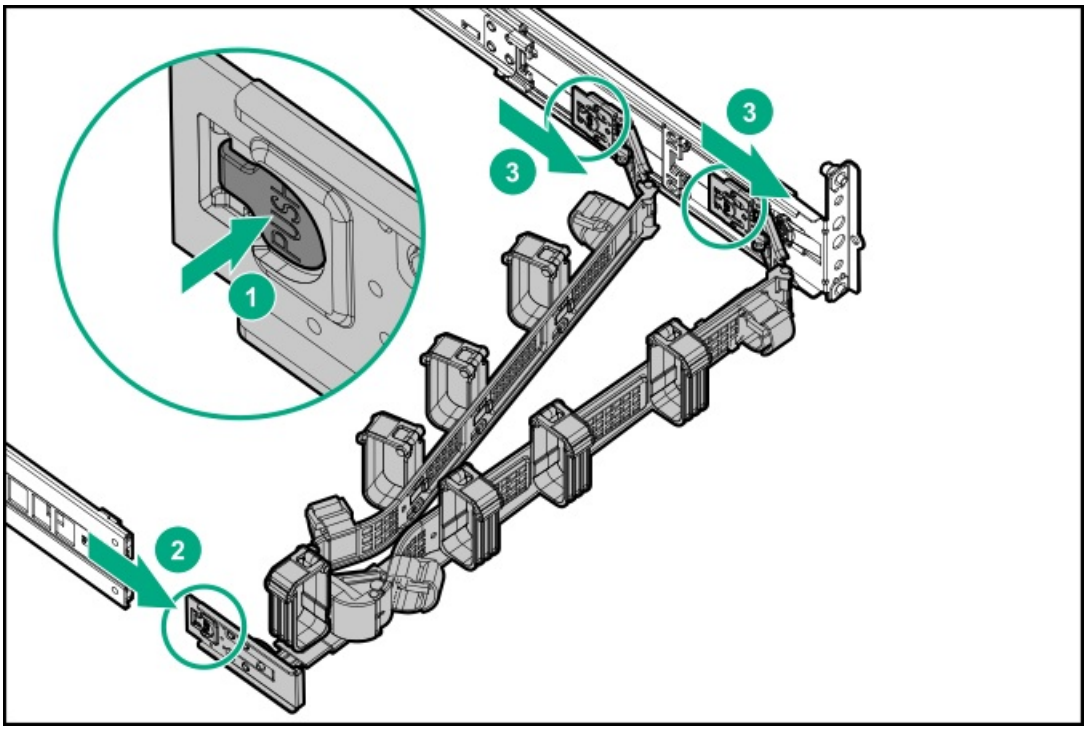

Results

To replace the component, reverse the removal procedure.

Removing and replacing a power supply

Subtopics

Power supply warnings and cautions
DC power supply warnings and cautions
Removing and replacing a hot-plug AC power supply
Removing and replacing the HPE 800 W Flex Slot -48 VDC hot-plug power supply
Removing and replacing an HPE 1600 W Flex Slot -48 VDC hot-plug power supply

Power supply warnings and cautions

WARNING

To reduce the risk of electric shock or damage to the equipment:

- Do not disable the power cord grounding plug. The grounding plug is an important safety feature.
- Plug the power cord into a grounded (earthed) electrical outlet that is easily accessible at all times.
- Unplug the power cord from the power supply to disconnect power to the equipment.
- Do not route the power cord where it can be walked on or pinched by items placed against it. Pay particular attention to the plug, electrical outlet, and the point where the cord extends from the server.

WARNING

To reduce the risk of injury from electric shock hazards, do not open power supplies. Refer all maintenance, upgrades, and servicing to qualified personnel

CAUTION

Mixing different types of power supplies in the same server might:

- Limit or disable some power supply features including support for power redundancy.
- Cause the system to become unstable and might shut down.

To ensure access to all available features, all power supplies in the same server should have the same output and efficiency ratings. Verify that all power supplies have the same part number and label color.

DC power supply warnings and cautions

WARNING

To reduce the risk of electric shock, be sure that the cable grounding kit is properly installed and connected to a suitable protective earth terminal before connecting the power source to the enclosure.

CAUTION

This equipment is designed to permit the connection of the earthed conductor of the DC supply circuit to the earthing conductor at the equipment. If this connection is made, all the following must be met:

- This equipment must be connected directly to the DC supply system earthing electrode conductor or to a bonding jumper from an earthing terminal bar or bus to which the DC supply system earthing electrode conductor is connected.
- This equipment must be located in the same immediate area (such as adjacent cabinets) as any other equipment that has a connection between the earthed conductor of the same DC supply circuit and the earthing conductor, and also the point of earthing of the DC system. The DC system must be earthed elsewhere.
- The DC supply source is to be located within the same premises as the equipment.
- Switching or disconnecting devices must not be in the earthed circuit conductor between the DC source and the point of connection of the earthing electrode conductor.

Removing and replacing a hot-plug AC power supply

About this task

WARNING

To reduce the risk of personal injury, fire, or damage to the equipment, do not overload the AC supply branch circuit that provides power to the rack. Consult the electrical authority having jurisdiction over wiring and installation requirements of your facility.

WARNING

To reduce the risk of personal injury from hot surfaces, allow the drives, power supplies, and internal system components to cool before touching them.

CAUTION

To prevent damage to electrical components, properly ground the server before beginning any installation procedure. Improper grounding can cause electrostatic discharge.

CAUTION

To prevent improper cooling and thermal damage, do not operate the server or the enclosure unless all drive and device bays are populated with either a component or a blank.

Procedure

1. If installed, release the cable management arm.
2. If the server is using a single power supply only, remove all power from the server:
   a. Back up all server data.
   b. Power down the server.
   c. Disconnect all peripheral cables from the server.
3. Release the power cord from the strain relief strap.

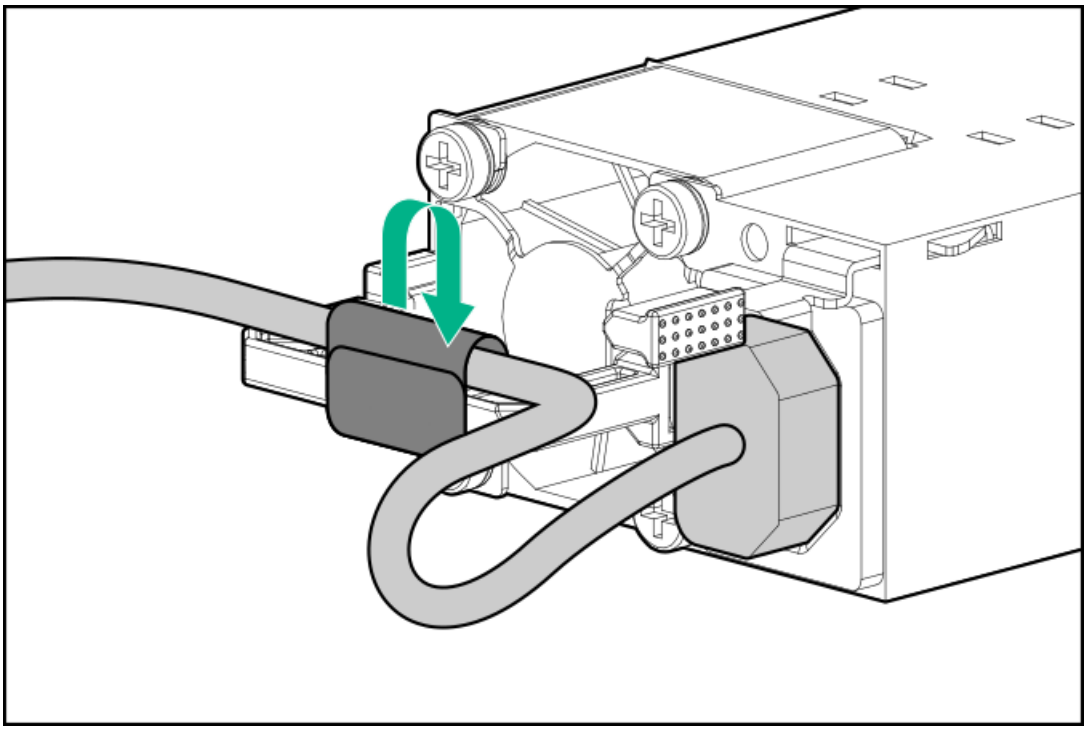

4. Disconnect the power cord from the power supply.

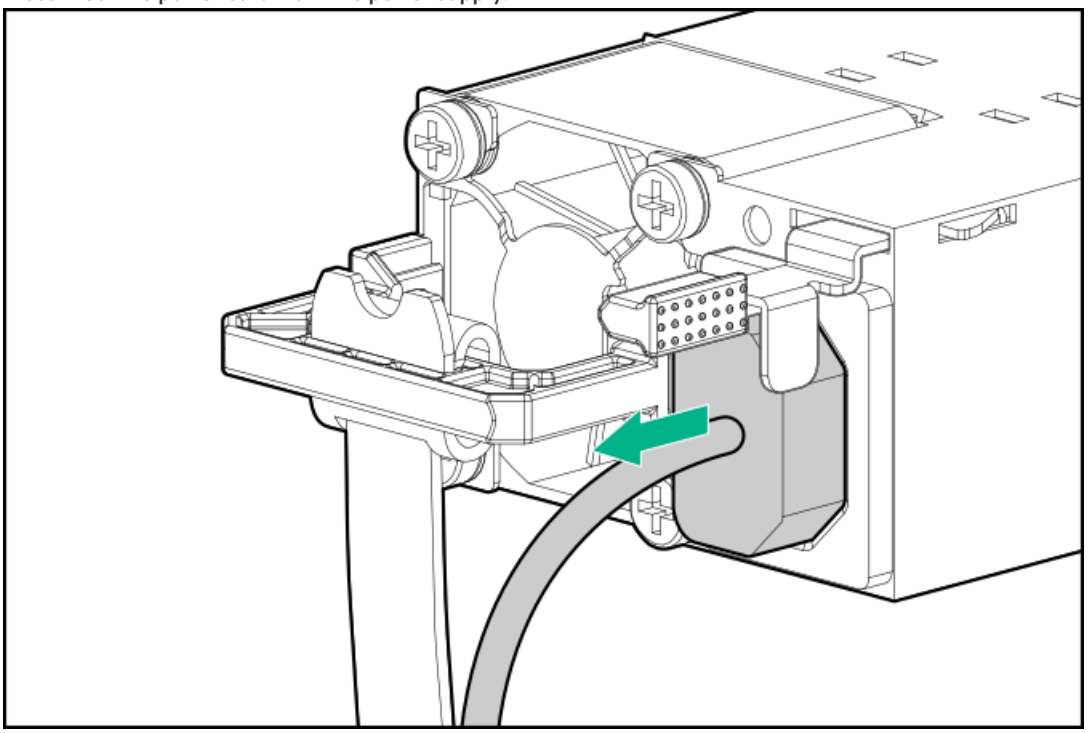

5. Remove the power supply.

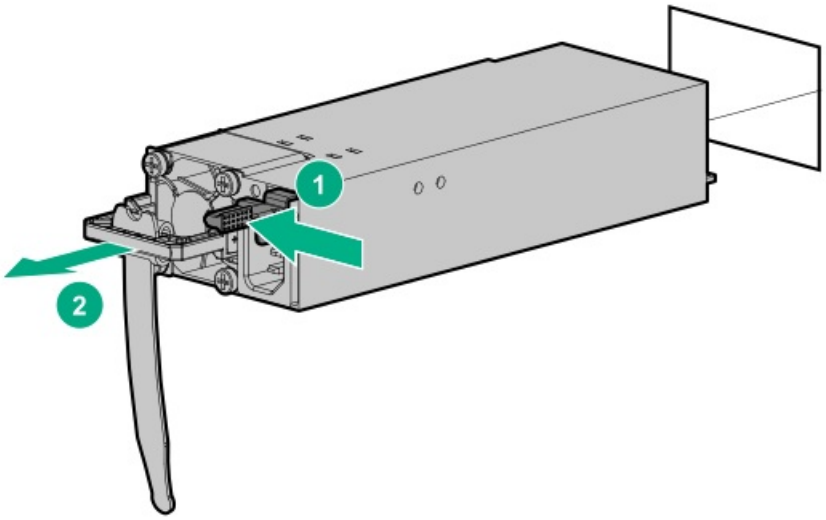

Results

To replace the component, reverse the removal procedure.

Removing and replacing the HPE 800 W Flex Slot -48 VDC hot-plug power supply

Prerequisites

Before you perform this procedure, make sure that you have the following items:

- No. 1 Phillips screwdriver
- If you are replacing the factory installed ground lug, use the KST RNB5-5 crimp terminal ring or equivalent. Use an M5-0.80 x 8 screw to attach the ground lug to the power supply.

About this task

WARNING

To reduce the risk of electric shock, fire, and damage to the equipment, you must install this product in accordance with the following guidelines:

- The HPE 800 W Flex Slot -48 VDC hot-plug power supply is intended only for installation in Hewlett Packard Enterprise servers located in a restricted access location.
- The HPE 800 W Flex Slot -48 VDC hot-plug power supply is not intended for direct connection to the DC supply branch circuit. Only connect this power supply to a power distribution unit (PDU) that provides an independent overcurrent-protected output for each DC power supply. Each output overcurrent-protected device in the PDU must be suitable for interrupting fault current available from the DC power source and must be rated no more than 30 A.
- The PDU output must have a shut-off switch or a circuit breaker to disconnect power for each power supply. To completely remove power from the power supply, disconnect power at the PDU. Disconnect the power for each power supply, if there are multiple power supplies.
- In accordance with applicable national requirements for Information Technology Equipment and Telecommunications Equipment, this power supply only connects to DC power sources that are classified as SELV or TNV. Generally, these requirements are based on the International Standard for Information Technology Equipment, IEC 60950-1/IEC 62368-1. In accordance with local and regional electric codes and regulations, the DC source must have one pole (Neutral/Return) reliably connected to earth ground.
- You must connect the power supply ground screw located on the front of the power supply to a suitable ground (earth) terminal. In accordance with local and regional electric codes and regulations, this terminal must be connected to a suitable building ground (earth) terminal. Do not rely on the rack or cabinet chassis to provide adequate ground (earth) continuity.

Procedure

1. If installed, release the cable management arm.
2. If the server is using a single power supply only, remove all power from the server:
   a. Back up all server data.
   b. Power down the server.
   c. Disconnect all peripheral cables from the server.
3. Release the power cord, wires, and/or cables from the strain relief strap.
4. To access the ground cable screw, slide the power supply out of the bay.

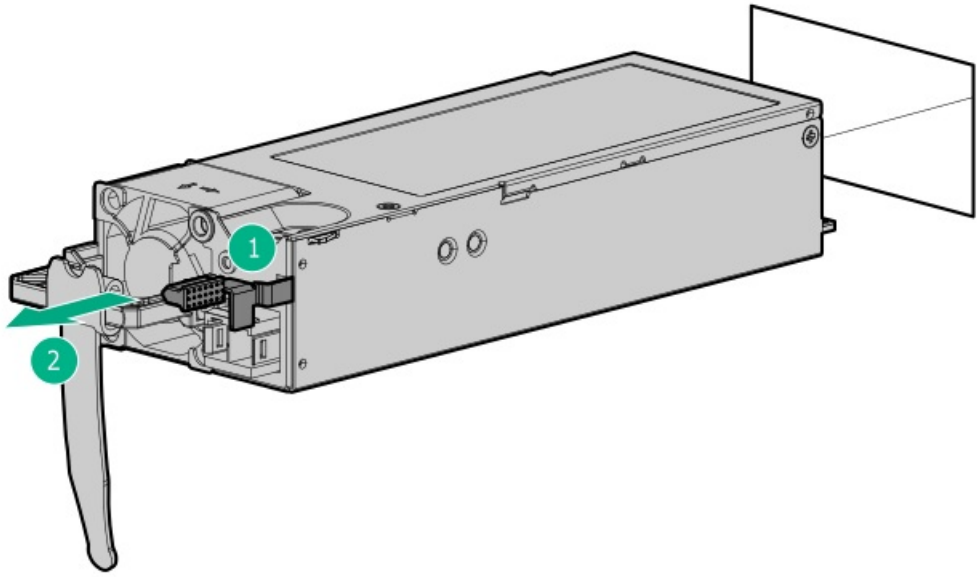

5. Detach the ground (earthed) cable from the power supply.

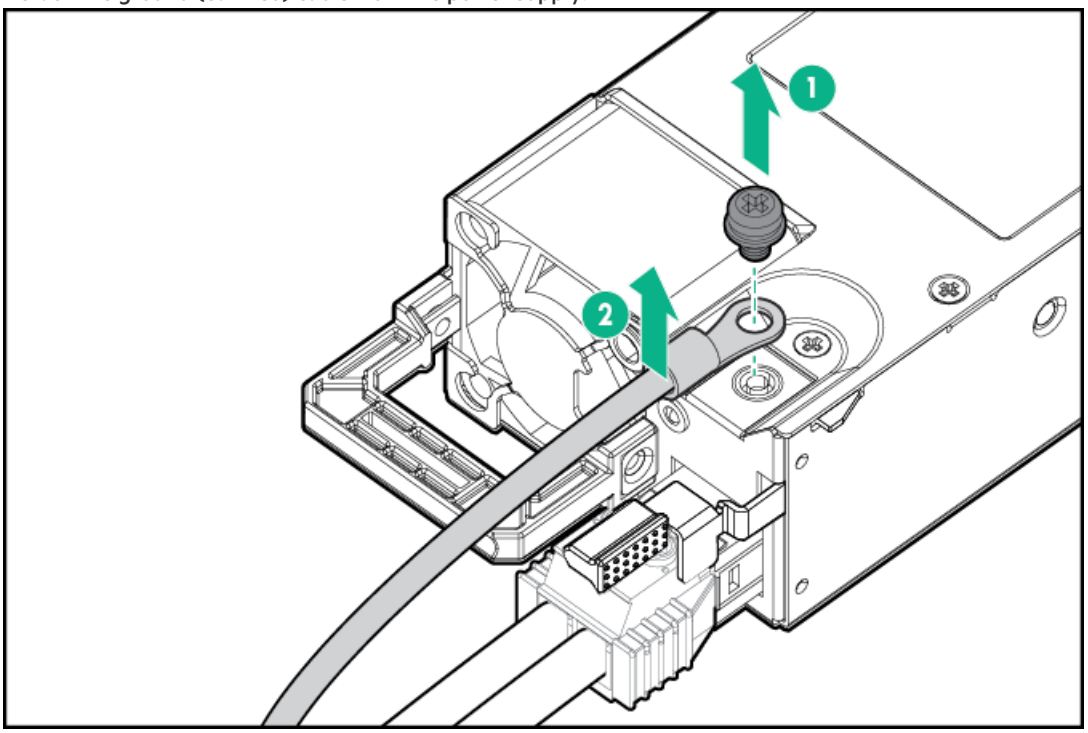

6. Remove the terminal block connector from the power supply.

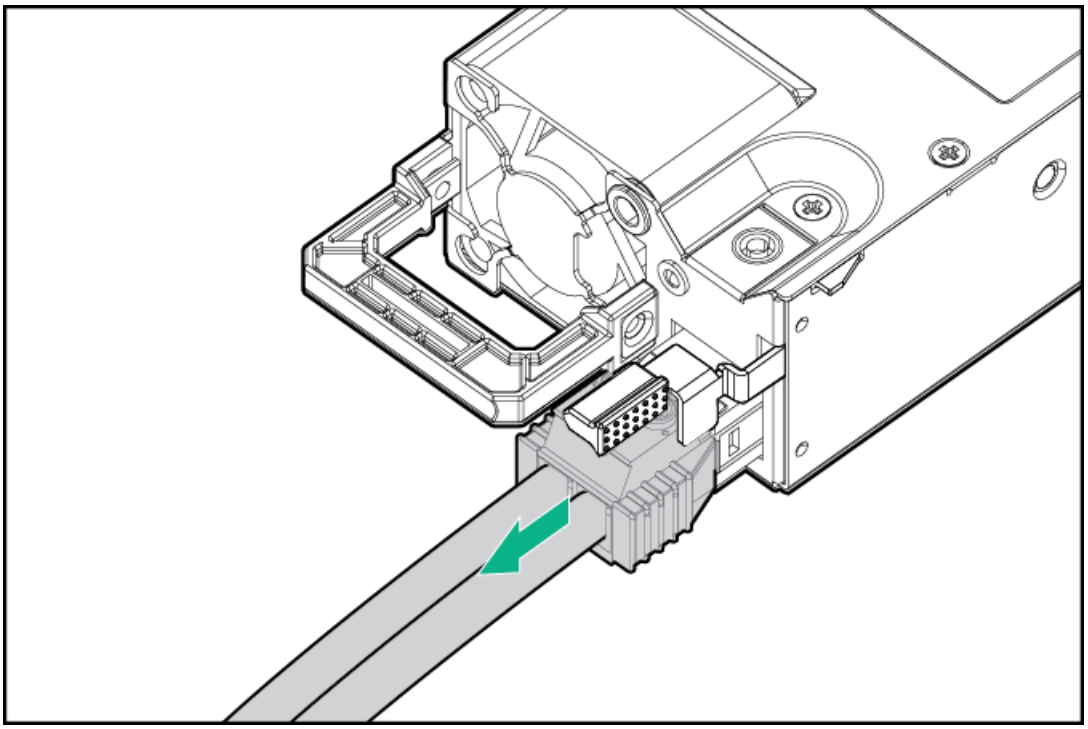

To replace the component, reverse the removal procedure.

Removing and replacing an HPE 1600 W Flex Slot -48 VDC hot-plug power supply

Prerequisites

Before you perform this procedure, make sure that you have a No. 1 Phillips screwdriver.

About this task

WARNING

To reduce the risk of electric shock, fire, and damage to the equipment, you must install this product in accordance with the following guidelines:

- The HPE 1600 W Flex Slot -48 VDC hot-plug power supply is intended only for installation in Hewlett Packard Enterprise servers located in a restricted access location.
- The HPE 1600 W Flex Slot -48 VDC hot-plug power supply is not intended for direct connection to the DC supply branch circuit. Only connect this power supply to a power distribution unit (PDU) that provides an independent overcurrent-protected output for each DC power supply. Each output overcurrent-protected device in the PDU must be suitable for interrupting fault current available from the DC power source and must be rated no more than 45 A.
- The PDU output must have a shut-off switch or a circuit breaker to disconnect power for each power supply. To completely remove power from the power supply, disconnect power at the PDU. The end product may have multiple power supplies. To remove all power from the product, disconnect the power for each power supply.
- In accordance with applicable national requirements for Information Technology Equipment and Telecommunications Equipment, this power supply only connects to DC power sources that are classified as SELV or TNV. Generally, these requirements are based on the International Standard for Information Technology Equipment, IEC 60950-1/IEC 62368-1. In accordance with local and regional electric codes and regulations, the DC source must have one pole (Neutral/Return) reliably connected to earth ground.
- You must connect the power supply ground screw located on the front of the power supply to a suitable ground (earth) terminal. In accordance with local and regional electric codes and regulations, this terminal must be connected to a suitable building ground (earth) terminal. Do not rely on the rack or cabinet chassis to provide adequate ground (earth) continuity.

Procedure

1. If installed, release the cable management arm.
2. If the server is using a single power supply only, remove all power from the server:
   a. Back up all server data.
   b. Power down the server.
   c. Disconnect all peripheral cables from the server.
3. Slide the power supply out of the bay.
4. Release the ground (earthed), -48 V, and return wires from the strain relief strap.

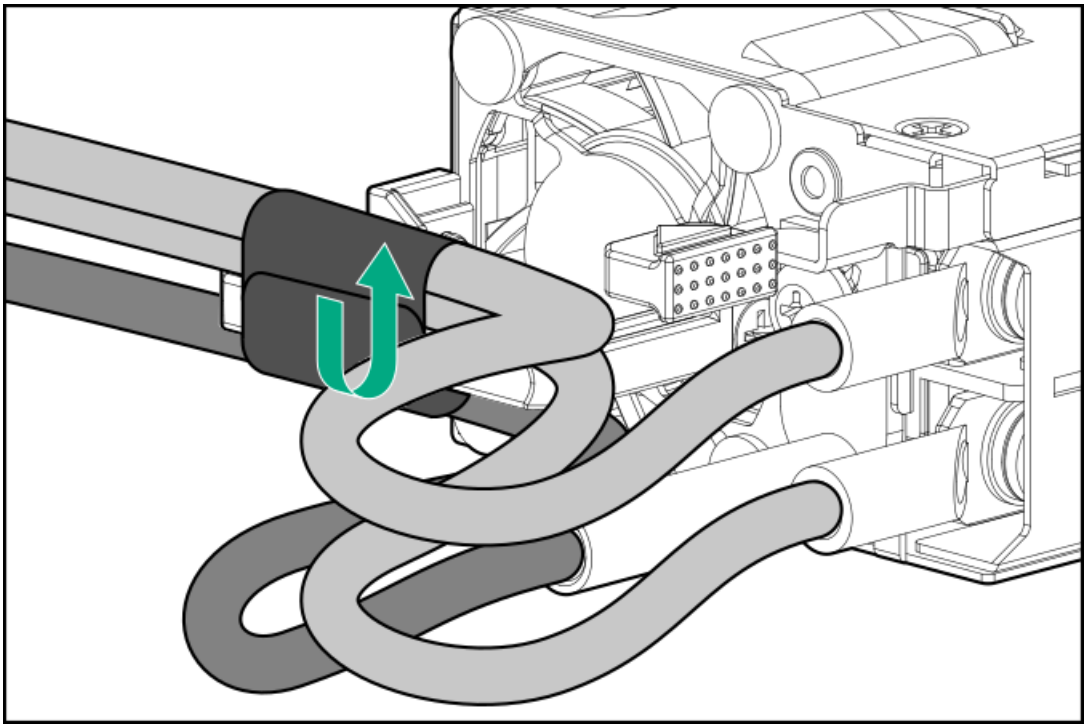

5. Disconnect the ground (earthed) wire from the power supply.

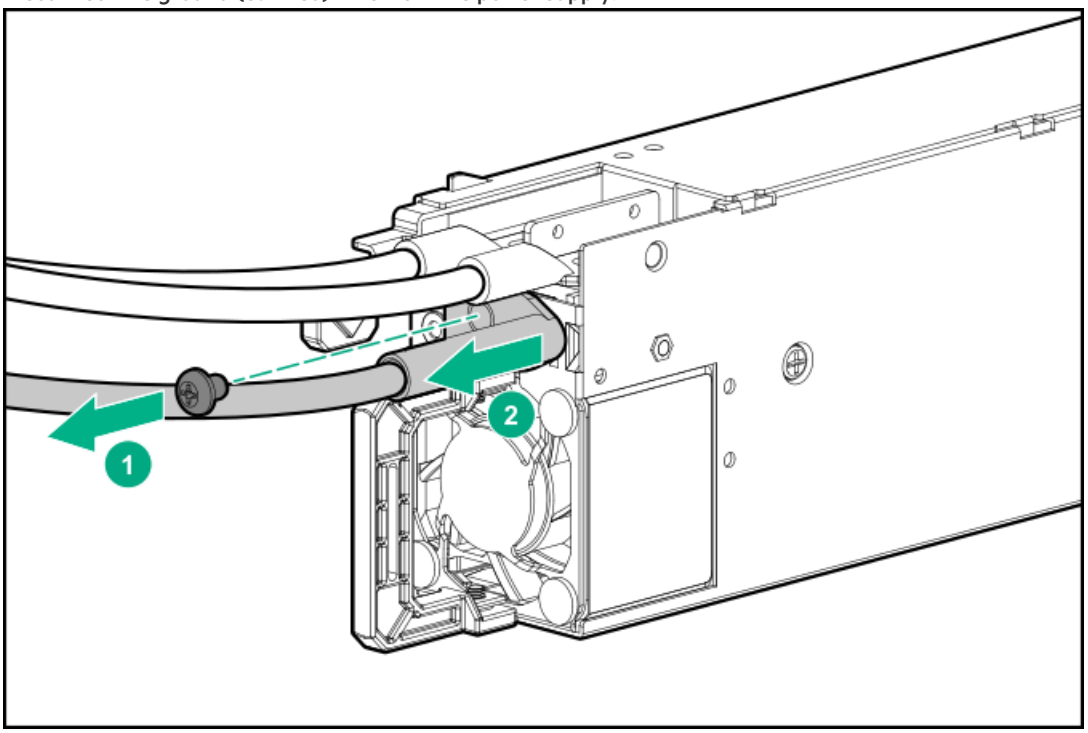

6. Remove the clear plastic cover from the power supply.

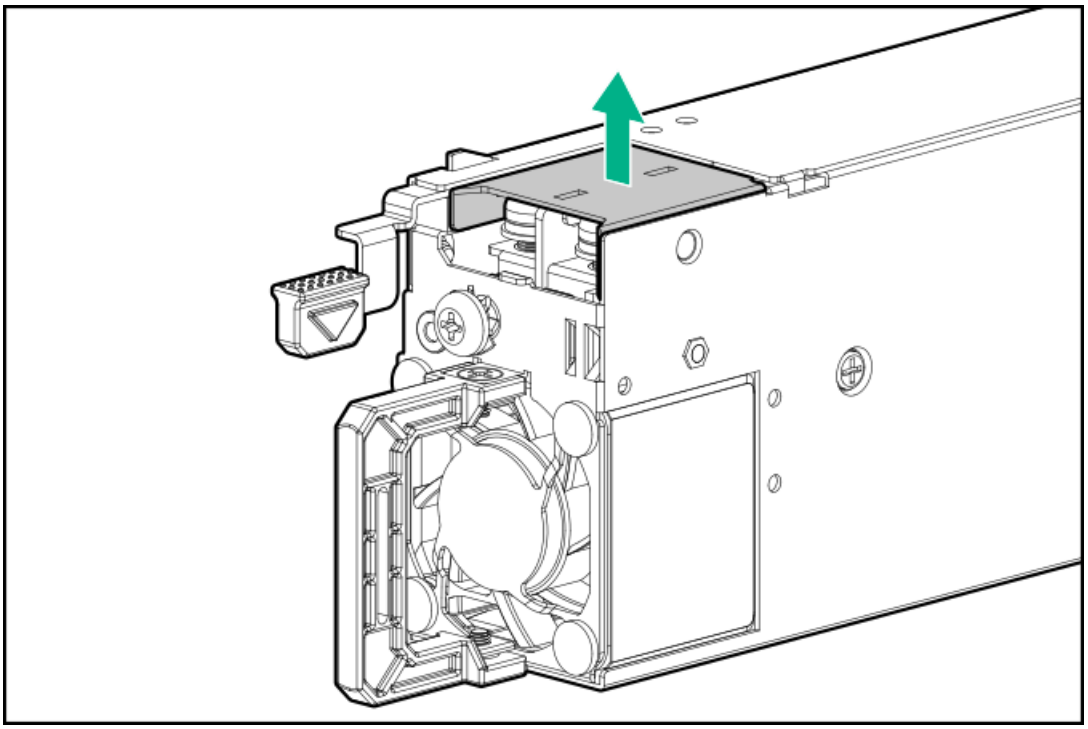

7. Disconnect the -48 V and return wires from the power supply.

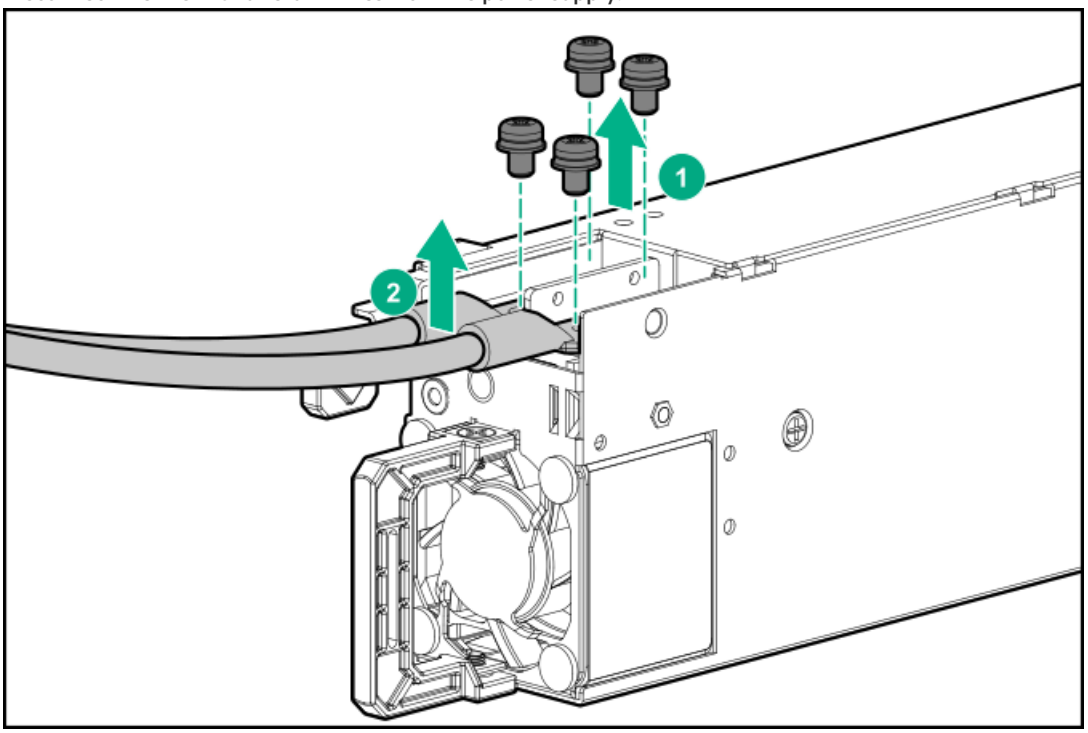

Results

To replace the component, reverse the removal procedure.

Removing and replacing a power supply blank

Procedure

Remove the component as indicated.

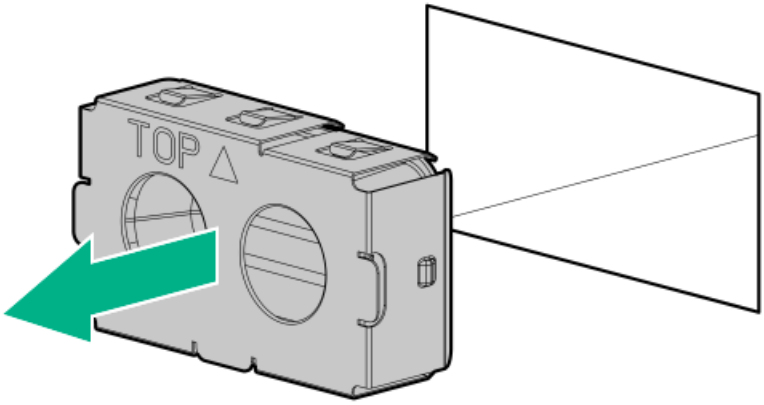

To replace the component, reverse the removal procedure.

Removing and replacing the rack rails

Prerequisites

Before you begin, be sure that you have the appropriate screwdriver for the screws in the rack.

About this task

WARNING

To reduce the risk of personal injury or damage to the equipment, you must adequately support the enclosure during installation and removal.

Procedure

1. Power down the server.
2. Remove all power:
   a. Disconnect each power cord from the power source.
   b. Disconnect each power cord from the server.
3. Remove the server from the rack.
4. Place the server on a sturdy, level surface.

   IMPORTANT

   When removing the rail from the rack, always remove the front of the rail first.
5. If installed, remove the cable management arm.
6. Remove the rail from the rack.

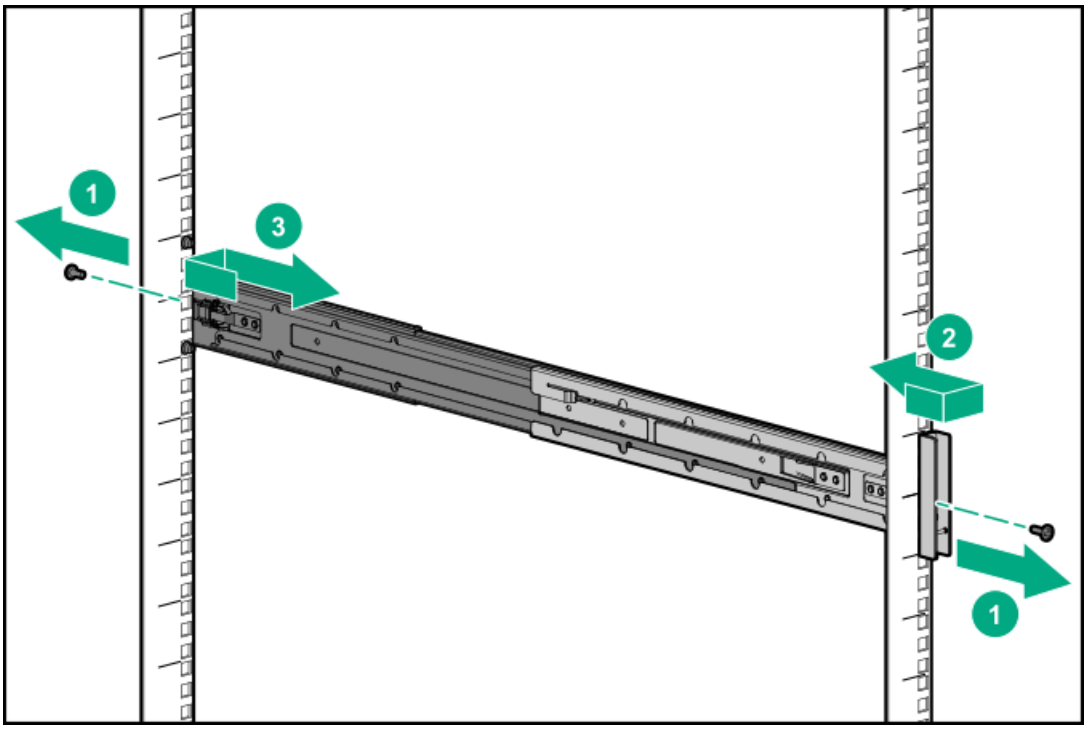

Results

To replace the component, reverse the removal procedure.

Removing and replacing the hot-plug fan

About this task

IMPORTANT

Do not mix standard fans and high-performance fans in the same server.

Procedure

1. If installed, release the cable management arm.
2. Extend the server from the rack.
3. Remove the access panel.
4. Remove the fan.

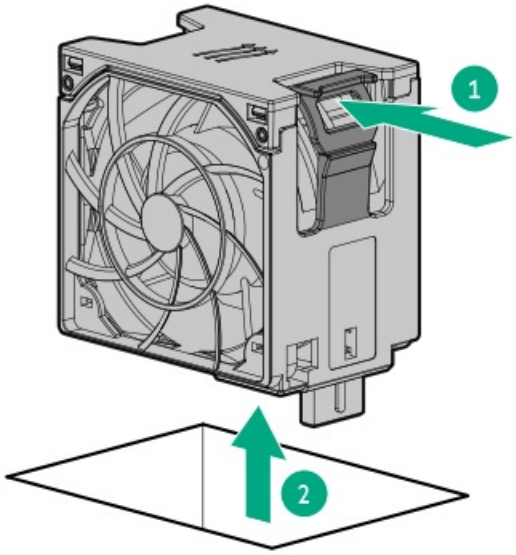

Results

To replace the component, reverse the removal procedure.

Removing and replacing the fan power cable

Procedure

1. Power down the server.
2. Remove all power:
   a. Disconnect each power cord from the power source.
   b. Disconnect each power cord from the server.
3. Do one of the following:
   - Extend the server from the rack.
   - Remove the server from the rack.
4. Remove the access panel.
5. Remove the fan cage.
6. Remove the air baffle.
7. Disconnect the fan power cable from the system board.
8. Remove the fan power cable bracket.

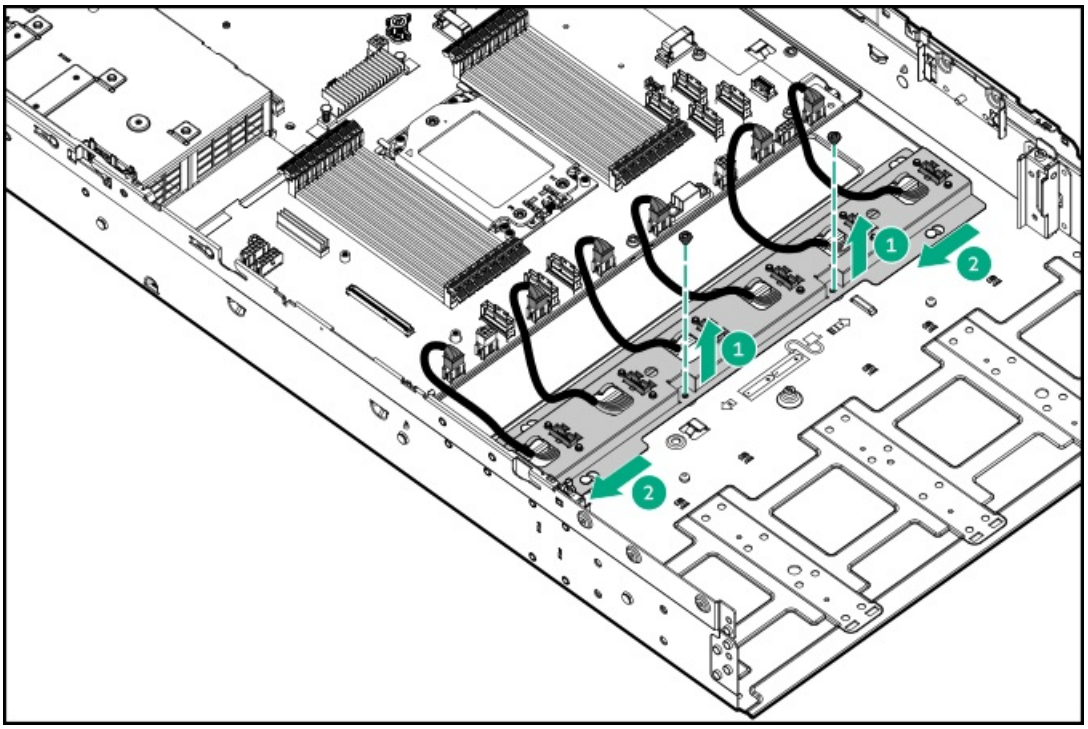

9. Remove the fan power cable

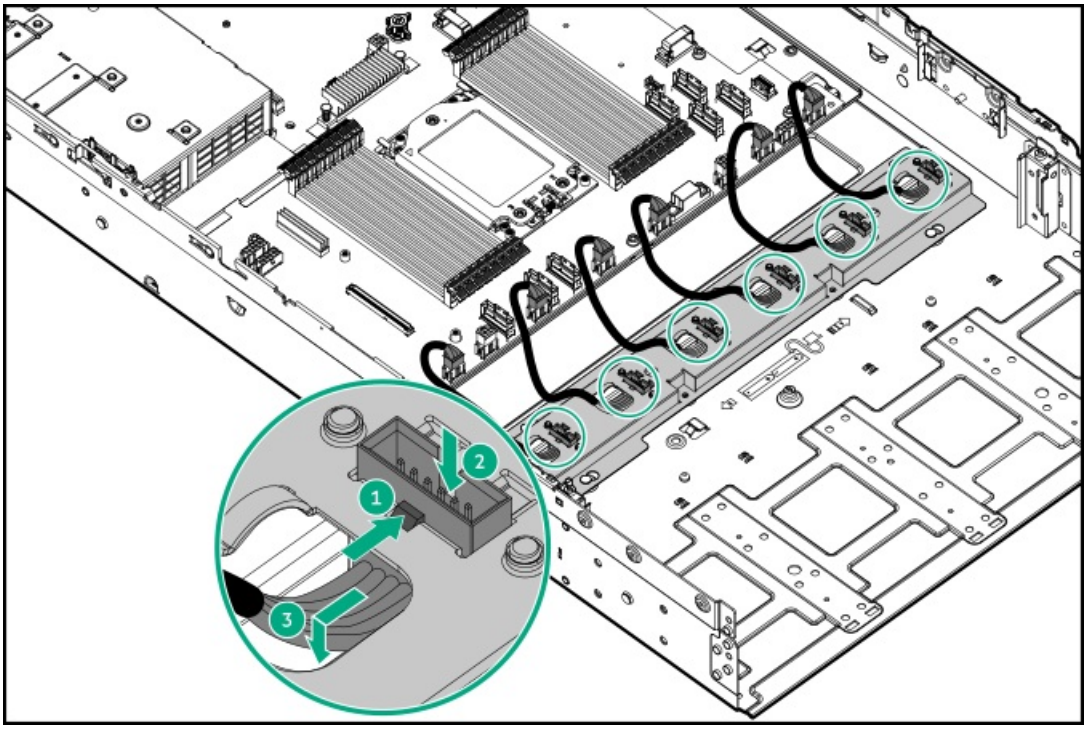

Results

To replace the component, reverse the removal procedure.

Removing and replacing the air baffle

About this task

CAUTION

For proper cooling, do not operate the server without the access panel, baffles, expansion slot covers, or blanks installed. If the server supports hot-plug components, minimize the amount of time the access panel is open.

Procedure

1. Power down the server.
2. If installed, release the cable management arm.
3. Remove all power:
   a. Disconnect each power cord from the power source.
   b. Disconnect each power cord from the server.
4. Do one of the following:
   - Extend the server from the rack.
   - Remove the server from the rack.
5. Remove the access panel.
6. Remove the air baffle.

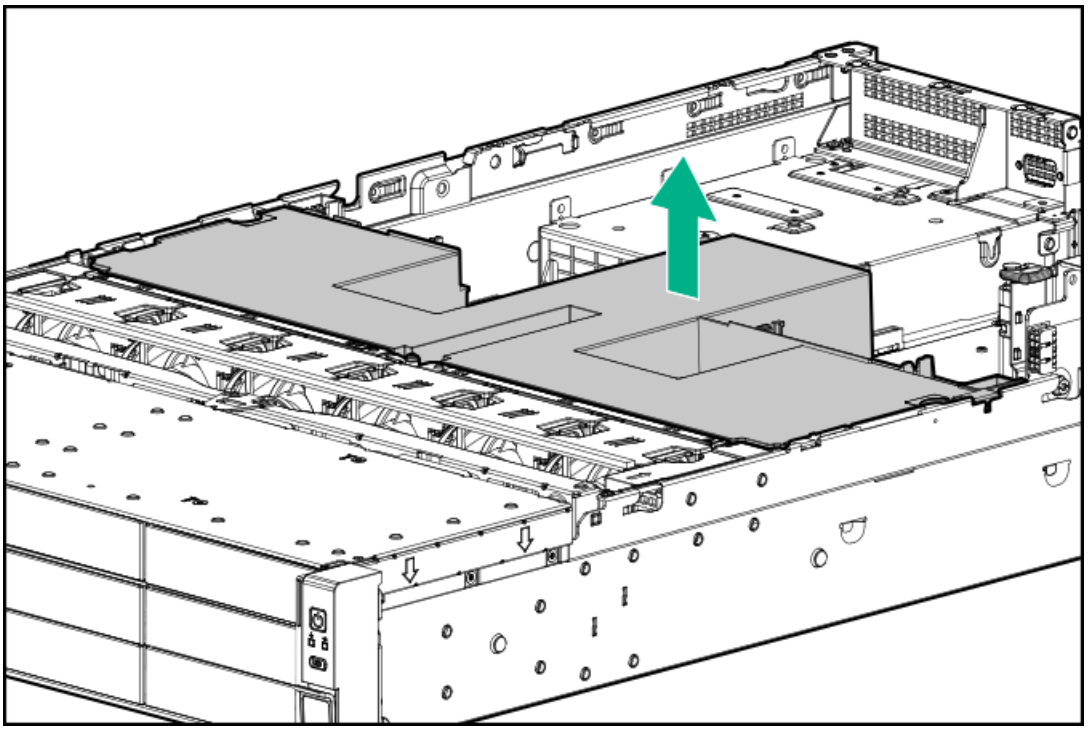

Results

To replace the component, reverse the removal procedure.

Removing and replacing the 8 SFF drive backplane

Prerequisites

Before you perform this procedure, make sure that you have a T-15 Torx screwdriver available.

About this task

https://www.hpe.com/support/video-dl345gen10plus-replacing-8SFF-drive-backplane

Procedure

1. Power down the server.
2. Remove all power:
   a. Disconnect each power cord from the power source.
   b. Disconnect each power cord from the server.
3. Do one of the following:
   - Extend the server from the rack.
   - Remove the server from the rack.
4. Remove the access panel.
5. Remove the fan cage.
6. Remove all drives.
7. Disconnect all cables from the drive backplane.
8. Remove the drive cage.

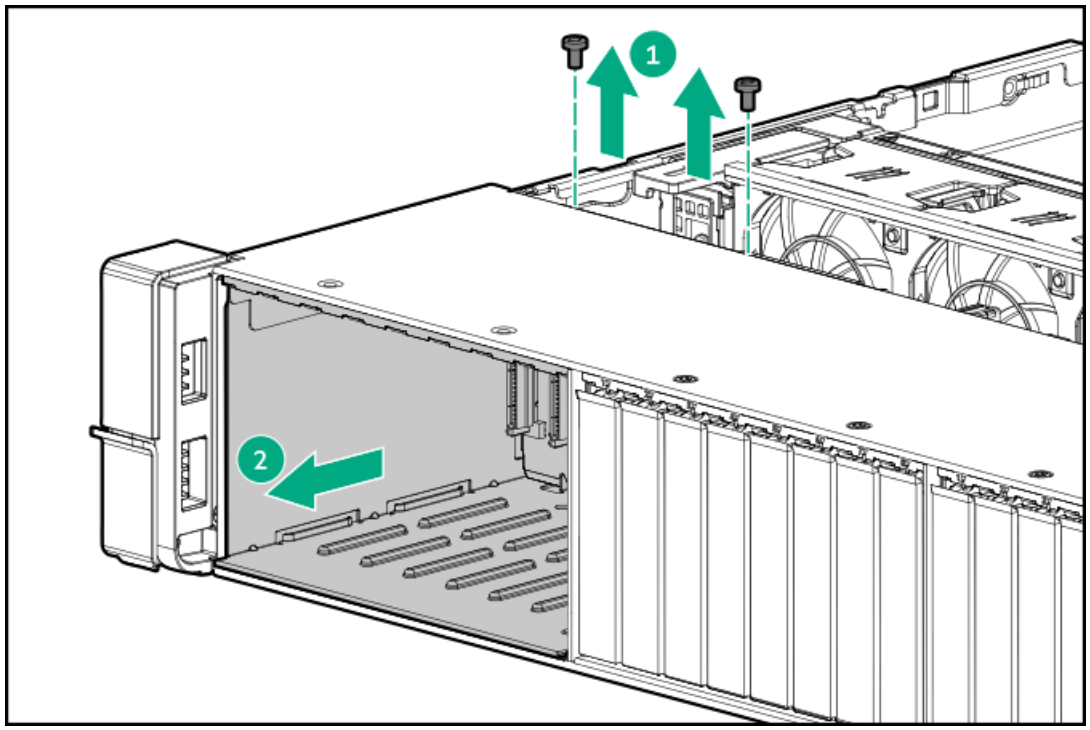

9. Remove the drive backplane.

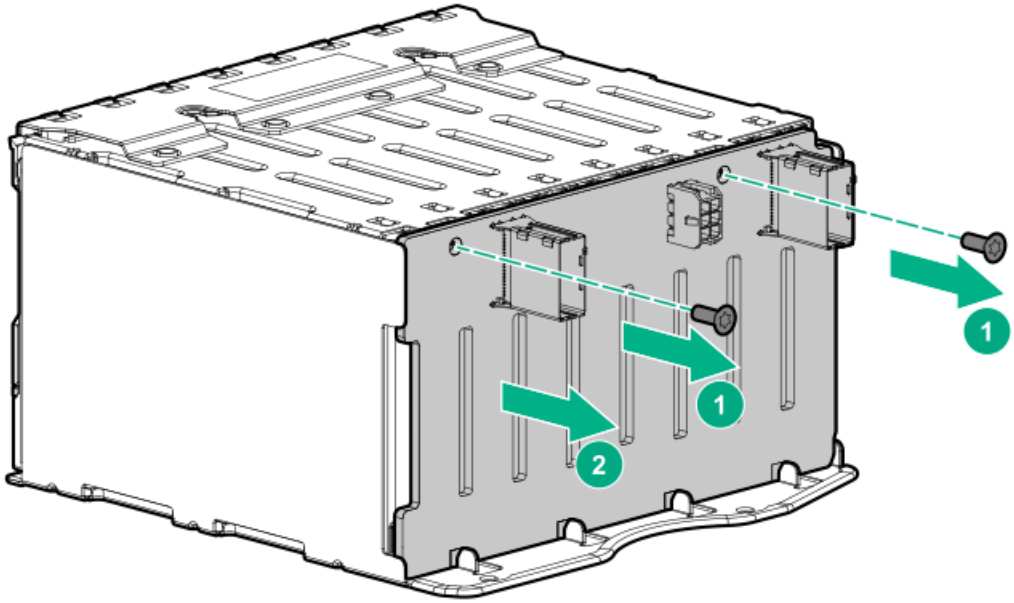

Results

To replace the component, reverse the removal procedure.

Removing and replacing an LFF drive backplane

Prerequisites

Before you perform this procedure, make sure that you have a T-15 Torx screwdriver available.

About this task

https://www.hpe.com/support/video-dl345gen10plus-replacing-4LFF-drive-backplane

Procedure

1. Power down the server.
2. Remove all power:
   a. Disconnect each power cord from the power source.
   b. Disconnect each power cord from the server.
3. Do one of the following:
   - Extend the server from the rack.
   - Remove the server from the rack.
4. Remove the access panel.
5. Remove all drives.
6. Remove the air baffle.
7. Remove the fan cage.

8. Disconnect all cables connected to the LFF backplane assembly.
9. Disconnect the right ear cable from the system board to access the backplane assembly screw on the right side.

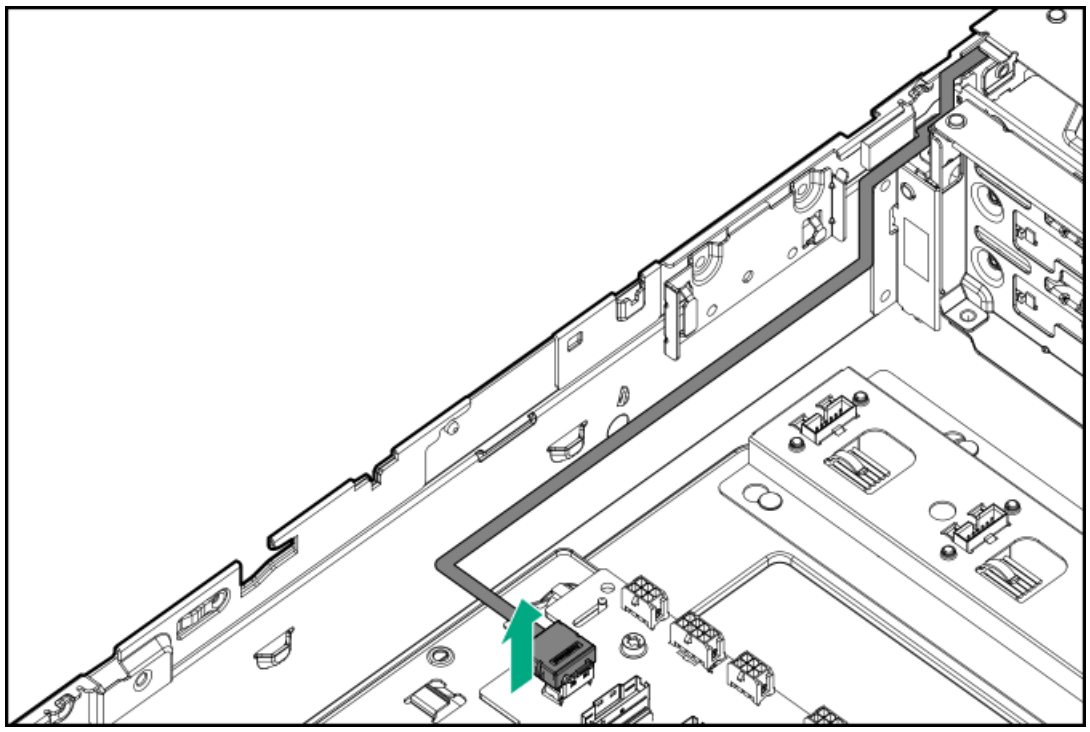

10. Remove the LFF backplane assembly.

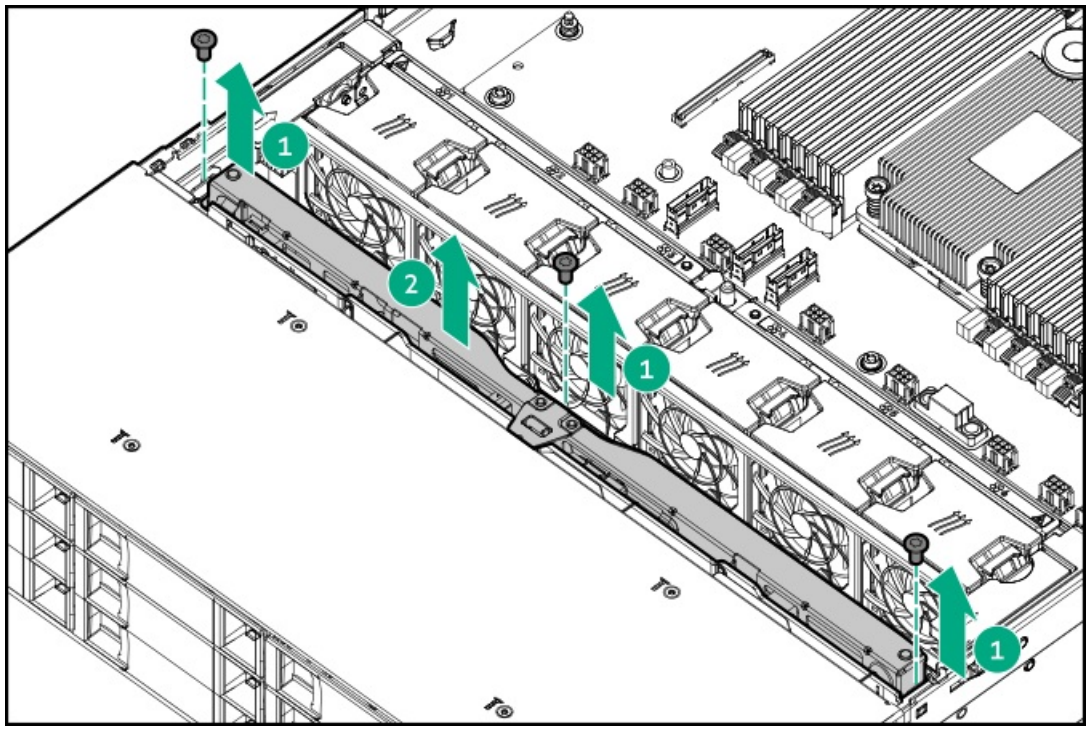

11. Remove the drive backplane.

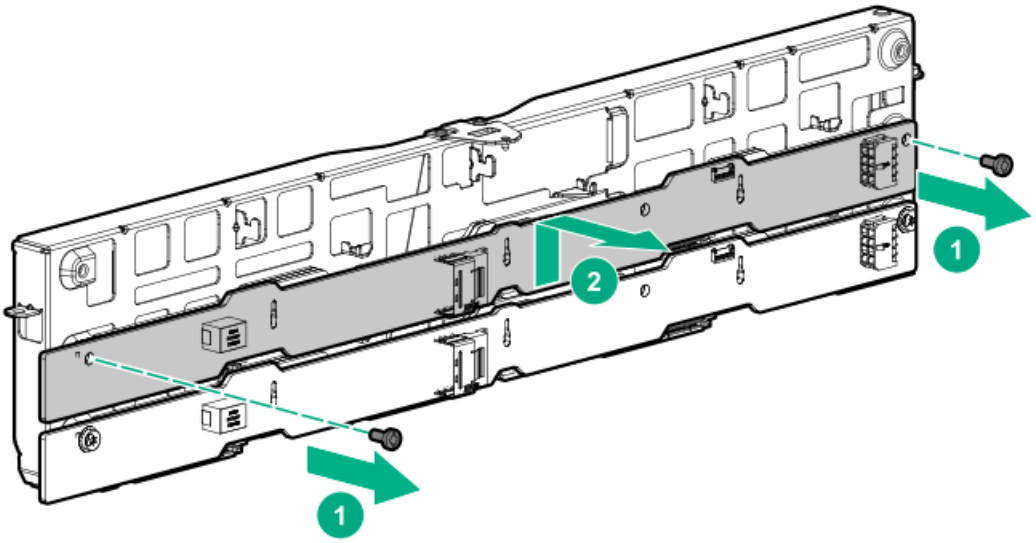

Results

To replace the component, reverse the removal procedure.

Removing and replacing the 2 SFF rear drive backplane

Prerequisites

Before you perform this procedure, make sure that you have a T-15 Torx screwdriver available.

About this task

https://www.hpe.com/support/video-dl345gen10plus-replacing-2SFF-drive-backplane

Procedure

1. Power down the server.
2. Remove all power:
   a. Disconnect each power cord from the power source.
   b. Disconnect each power cord from the server.
3. Remove the server from the rack
4. Remove the access panel.
5. Remove all drives.
6. Disconnect all cables from the drive backplane.
7. Remove the secondary riser cage.
8. Remove the drive backplane.

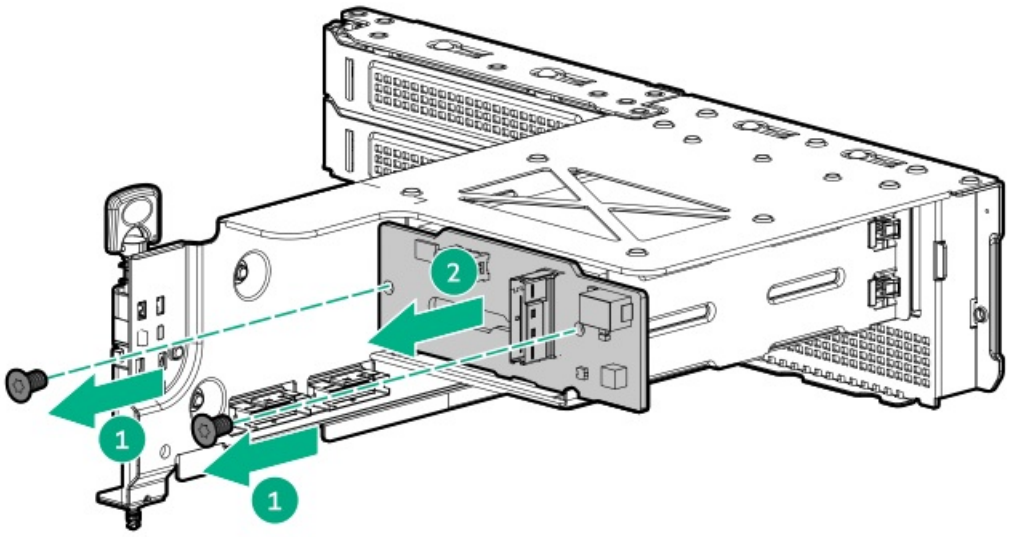

Results

To replace the component, reverse the removal procedure.

Removing and replacing an energy pack

Procedure

1. Power down the server.
2. Remove all power:
   a. Disconnect each power cord from the power source.
   b. Disconnect each power cord from the server.
3. Do one of the following:
   - Extend the server from the rack.
   - Remove the server from the rack.
4. Remove the access panel.
5. Remove the fan cage.
6. Remove the air baffle.
7. Disconnect the extension cable from the energy pack.
8. Remove the energy pack.

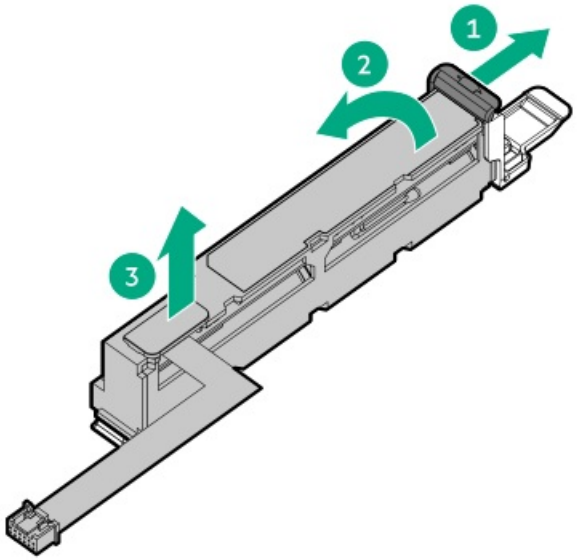

Results

To replace the component, reverse the removal procedure.

Removing and replacing an energy pack holder

Procedure

1. Power down the server.
2. Remove all power:
   a. Disconnect each power cord from the power source.
   b. Disconnect each power cord from the server.
3. Do one of the following:
   - Extend the server from the rack.
   - Remove the server from the rack.
4. Remove the access panel.
5. Remove the fan cage.
6. Remove the air baffle.
7. Disconnect the extension cable from the energy pack.
8. Remove the energy pack.

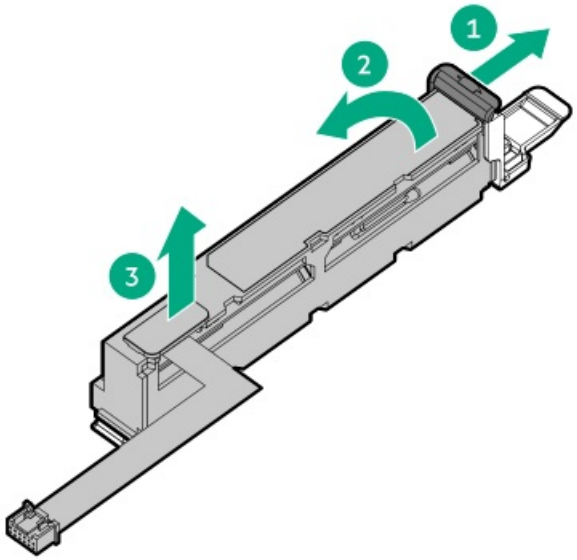

9. Remove the energy pack holder

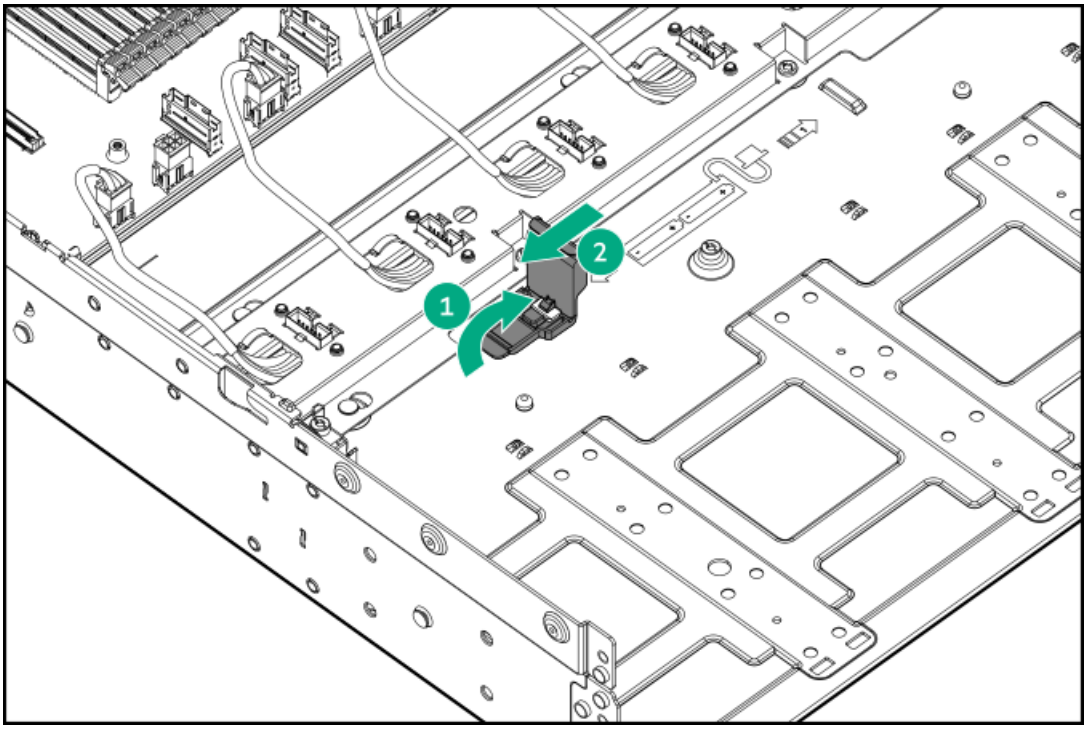

Results

To replace the component, reverse the removal procedure.

Removing and replacing a DIMM

Procedure

1. Power down the server.
2. Remove all power:
   a. Disconnect each power cord from the power source.

b. Disconnect each power cord from the server.

3. Do one of the following:
   - Extend the server from the rack.
   - Remove the server from the rack.
4. Remove the access panel.
5. Remove the air baffle.
6. Remove the DIMM.

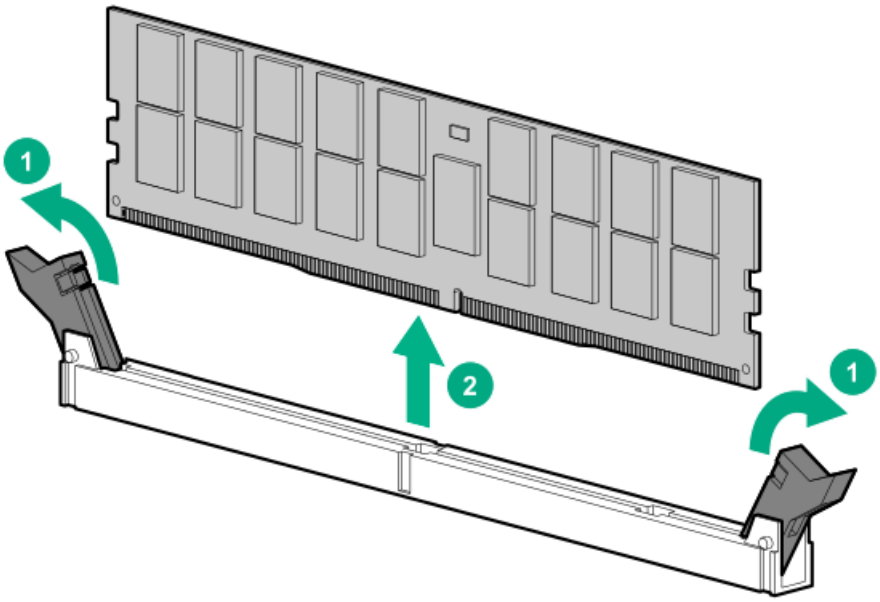

Results

To replace the component, reverse the removal procedure.

For DIMM configuration information, see the server user guide.

Removing and replacing a heatsink

Prerequisites

Before you perform this procedure, make sure that you have the following items available:

- T-20 screwdriver
- Alcohol wipe

About this task

This procedure shows a standard heatsink as an example. The replacement process is the same for both the standard and high-performance heatsinks.

Procedure

1. Power down the server.
2. Remove all power:

a. Disconnect each power cord from the power source.

b. Disconnect each power cord from the server.

3. Remove the server from the rack.
4. Remove the access panel.
5. Remove the air baffle.
6. Allow the existing heatsink to cool.
7. Remove the heatsink:

> **CAUTION**
>
> To prevent mechanical damage or depositing oil on your hands or other contaminants to the heatsink contact surface, hold the heatsink only by the edge of its baseplate. Do not touch the heatsink fins.

> **CAUTION**
>
> Heatsink screws must be tightened and loosened in alternating sequence as shown on the heatsink label.

a. Use a T-20 screwdriver to loosen the captive screws in the sequence specified on the heatsink label.

b. Lift the heatsink away from the system board.

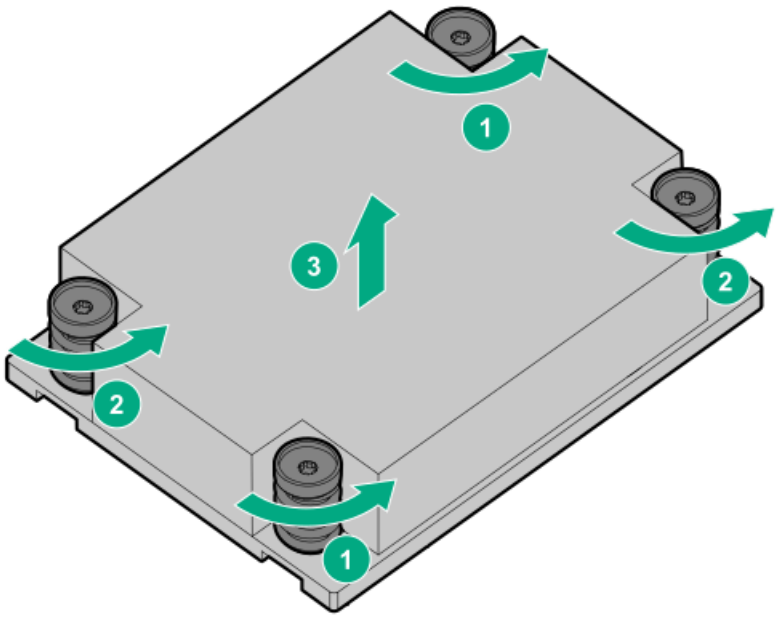

c. Place the heatsink on a flat work surface with its contact side facing up.

8. Use an alcohol wipe to remove the existing thermal grease from the processor.

   Allow the alcohol to evaporate before continuing.

9. Remove the thermal interface protective cover from the new heatsink.
10. Install the heatsink.

CAUTION

To prevent mechanical damage or depositing oil on your hands or other contaminant to the heatsink contact surface, hold the heatsink only by the edge of its base plate. Do not touch the heatsink fins.

CAUTION

To prevent thermal failure or component damage, do not move the heatsink once the bottom of its base plate touches the top of the processor. Excessive heatsink movement can cause the thermal grease to smear and become uneven. Voids in the compound can adversely impact the transfer of heat away from the processor.

CAUTION

Heatsink screws must be tightened and loosened in alternating sequence. Do not overtighten the screws as this might damage the system board or the processor socket.

a. Position the heatsink on top of the processor, ensuring that it is properly seated before securing the screws.

b. Use a T-20 screwdriver to tighten the captive screws in the sequence specified on the heatsink label until fully seated.

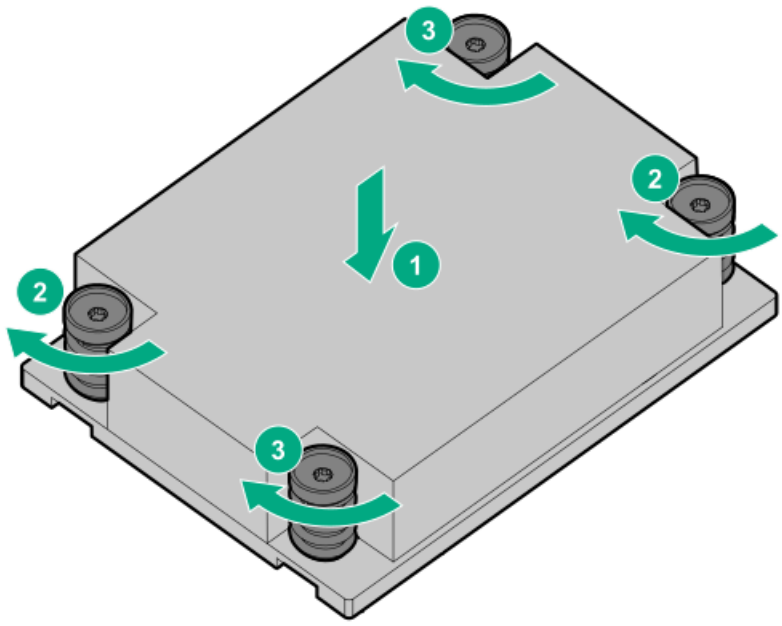

11. Install the air baffle.
12. Install the access panel.
13. Install the server into rack.
14. Connect each power cord to the server.
15. Connect each power cord to the power source.
16. Power up the server.

Removing and replacing a processor

Removing and replacing a processor

Prerequisites

Before you perform this procedure, make sure that you have the following items available:

- T-20 screwdriver
- Thermal grease (spare part number 777298-001)
- Alcohol wipe

About this task

https://www.hpe.com/support/video-dl345gen10plus-replacing-heatsink-and-processor

Hewlett Packard Enterprise recommends identifying the processor and socket components before performing this procedure.

Procedure

1. Observe the following alerts.

   CAUTION

   To avoid damage to the processor or system board, only authorized personnel should attempt to replace or install the processor in this server.

   CAUTION

   To prevent possible server malfunction and damage to the equipment, multiprocessor configurations must contain processors with the same part number.

   CAUTION

   If installing a processor with a faster speed, update the system ROM before installing the processor.

   To download firmware and view installation instructions, see the **Hewlett Packard Enterprise Support Center website**.

   CAUTION

   THE CONTACTS ARE VERY FRAGILE AND EASILY DAMAGED. To avoid damage to the socket or processor, do not touch the contacts.

2. Power down the server.
3. Remove all power:
   a. Disconnect each power cord from the power source.
   b. Disconnect each power cord from the server.
4. Do one of the following:
   - Extend the server from the rack.
   - Remove the server from the rack.
5. Remove the access panel.
6. Remove the air baffle.
7. Allow the heatsink to cool.

8. Remove the heatsink:

> **CAUTION**
>
> To prevent mechanical damage or depositing oil on your hands or other contaminants to the heatsink contact surface, hold the heatsink only by the edge of its baseplate. Do not touch the heatsink fins.

> **CAUTION**
>
> Heatsink screws must be tightened and loosened in alternating sequence as shown on the heatsink label.

a. Use a T-20 screwdriver to loosen the captive screws in the sequence specified on the heatsink label.

b. Lift the heatsink away from the system board.

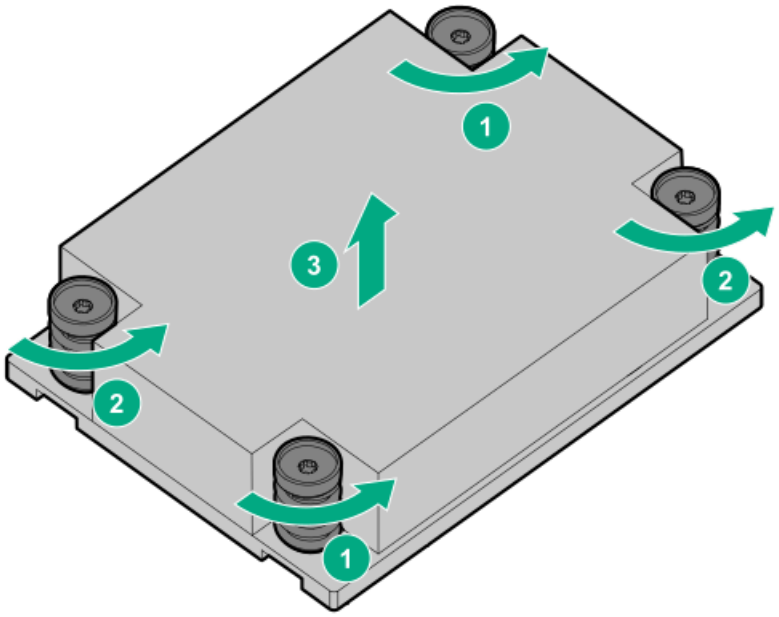

c. Place the heatsink on a flat work surface with its contact side facing up.

9. Use an alcohol wipe to remove the existing thermal grease from the heatsink and processor.

   Allow the alcohol to evaporate before continuing.

10. Use a screwdriver to loosen the three captive screws in the sequence shown and then pivot the force frame up.

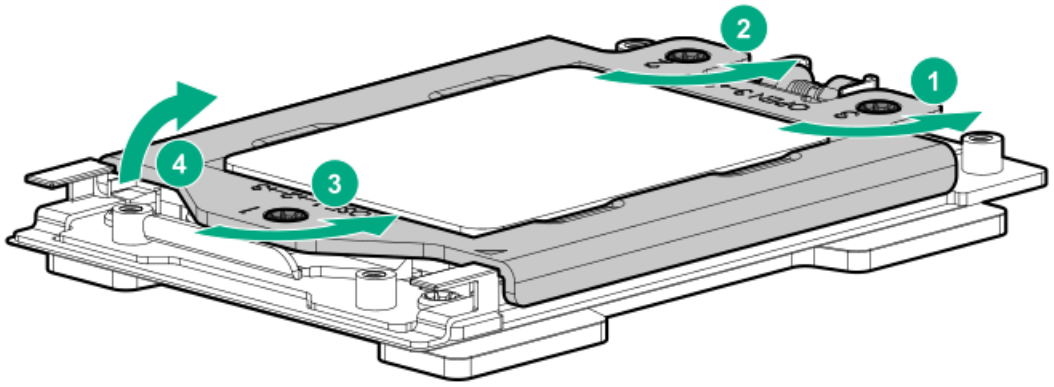

11. Remove the processor:

    a. Hold the lift tabs near the front end of the rail frame, and then pivot the rail frame to the vertical position.

    b. Slide the processor out of the rail frame.

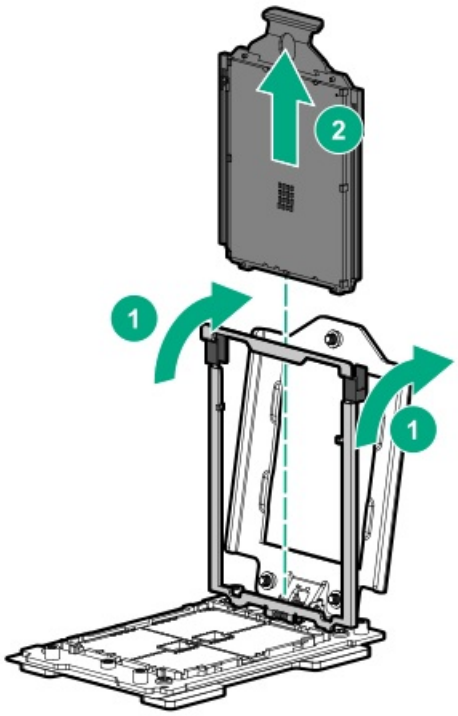

12. Install the processor:

    a. Hold the processor by its carrier handle and slide the processor into the rail frame until it engages with a click sound.

    b. Remove the pin field cover cap.

> **CAUTION**
>
> To prevent the risk of damaging the pins in the processor socket, do not reinstall the pin field cover cap after removing it.

    c. Hold the lift tabs near the front end of the rail frame, and then pivot the rail frame to the closed position.

    A click sound indicates that the rail frame is properly engaged.

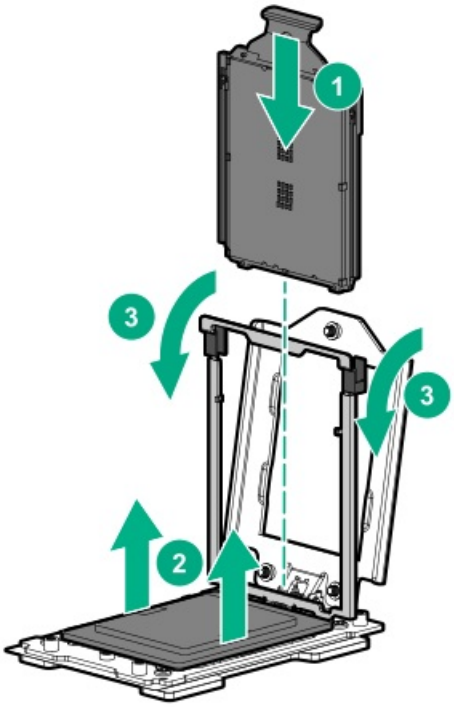

13. Close the force frame.

> **CAUTION**
>
> Do not overtighten the screws as this might damage the system board or the processor socket.

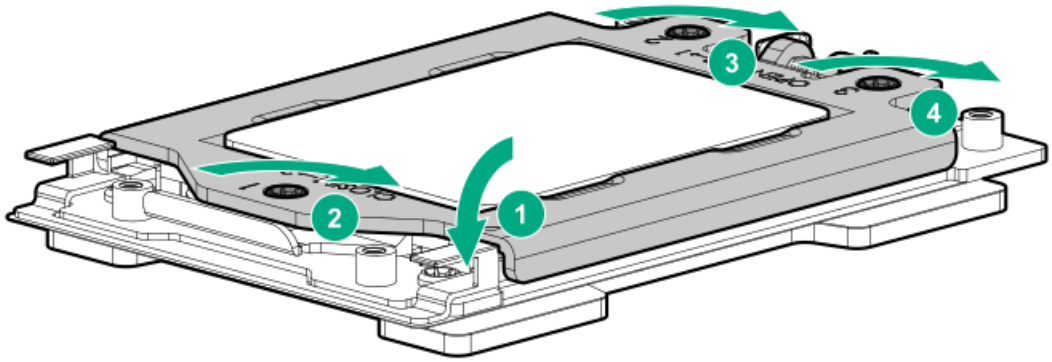

14. Apply new thermal grease to the processor in the pattern shown in the following image. Use the full contents of the thermal grease syringe.

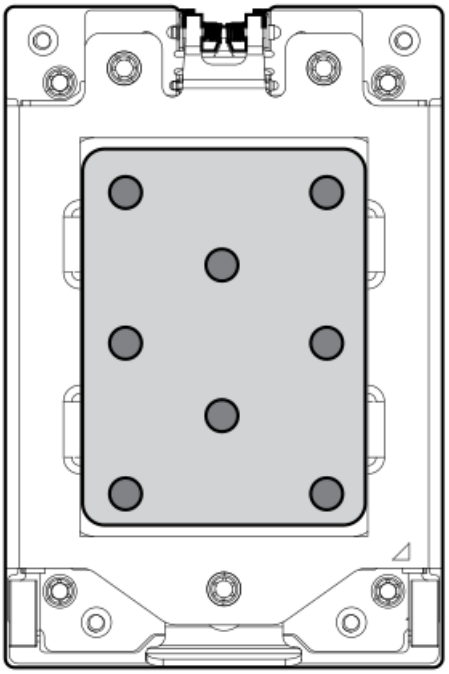

15. Install the heatsink.

> **CAUTION**
>
> To prevent mechanical damage or depositing oil on your hands or other contaminant to the heatsink contact surface, hold the heatsink only by the edge of its base plate. Do not touch the heatsink fins.

> **CAUTION**
>
> To prevent thermal failure or component damage, do not move the heatsink once the bottom of its base plate touches the top of the processor. Excessive heatsink movement can cause the thermal grease to smear and become uneven. Voids in the compound can adversely impact the transfer of heat away from the processor.

> **CAUTION**
>
> Heatsink screws must be tightened and loosened in alternating sequence as shown on the heatsink label. Do not overtighten the screws as this might damage the system board or the processor socket.

a. Position the heatsink on top of the processor, ensuring that it is properly seated before securing the screws.

b. Use a T-20 screwdriver to tighten the captive screws in the sequence specified on the heatsink label until fully seated.

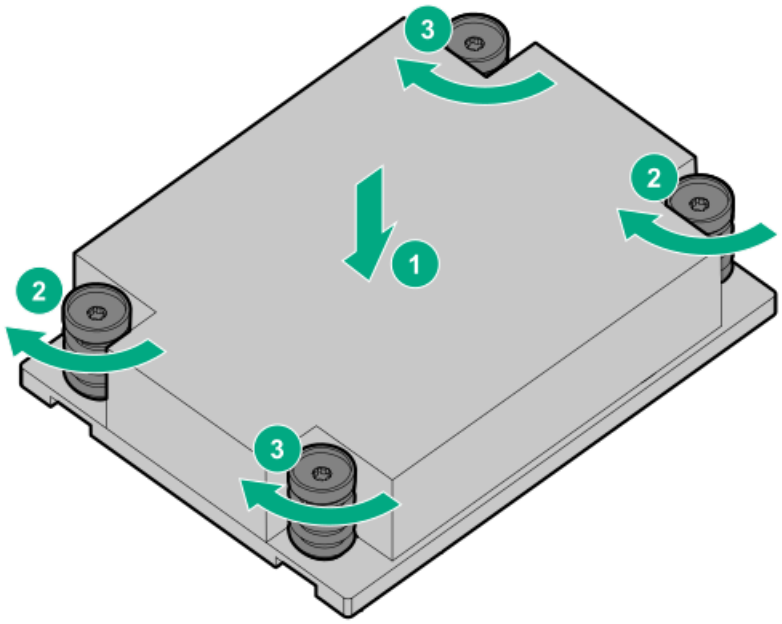

16. Install the air baffle
17. Install the access panel.
18. Install the server into the rack.
19. Connect each power cord to the server.
20. Connect each power cord to the power source.
21. Power up the server.

Removing and replacing a type-a modular storage controller

Prerequisites

Before you perform this procedure, make sure that you have a T-15 Torx screwdriver available.

Procedure

1. Power down the server.
2. Remove all power:
   a. Disconnect each power cord from the power source.
   b. Disconnect each power cord from the server.
3. Do one of the following:
   - Extend the server from the rack.
   - Remove the server from the rack.
4. Remove the access panel.
5. Remove the air baffle.
6. Disconnect all cables from the storage controller.

7. Remove the storage controller.

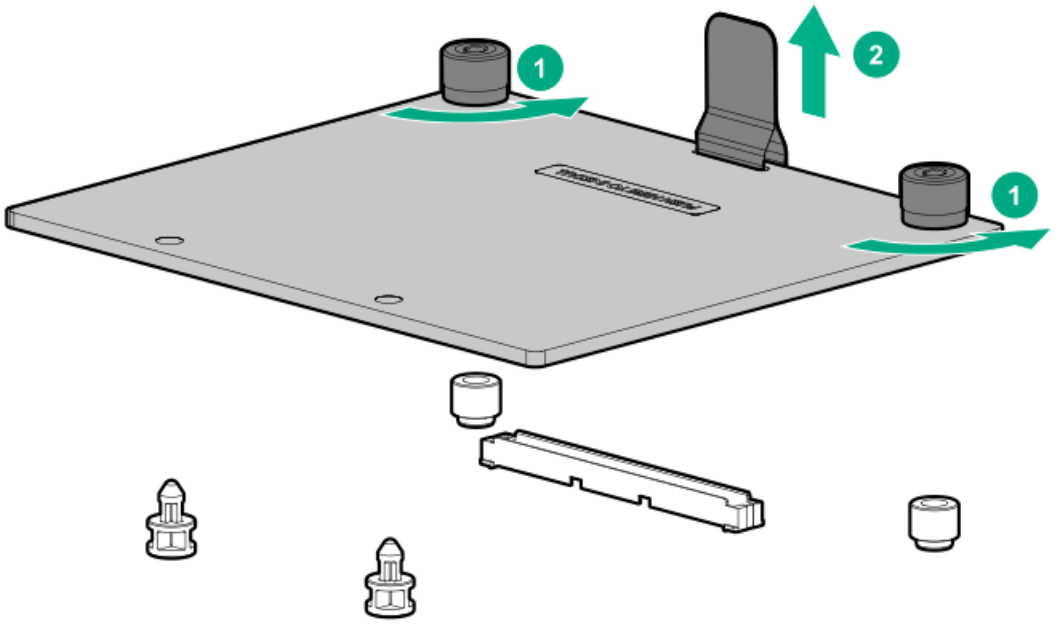

Results

To replace the component, reverse the removal procedure.

Removing and replacing an expansion board

Prerequisites

Before you perform this procedure, make sure that you a T-10 Torx screwdriver available.

Procedure

1. Power down the server.
2. Remove all power:
   a. Disconnect each power cord from the power source.
   b. Disconnect each power cord from the server.
3. Remove the server from the rack
4. Remove the access panel.
5. Disconnect any internal cables that are connected to the expansion board.
6. Remove the riser cage.
7. Remove the expansion board.

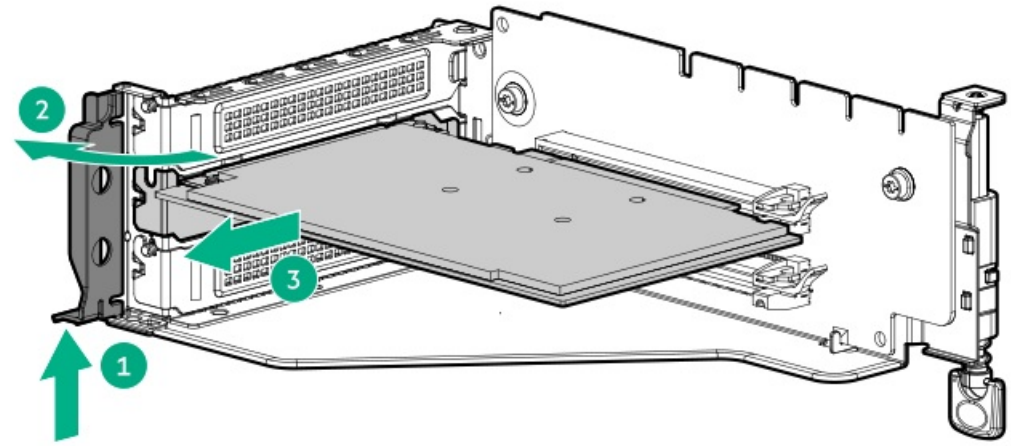

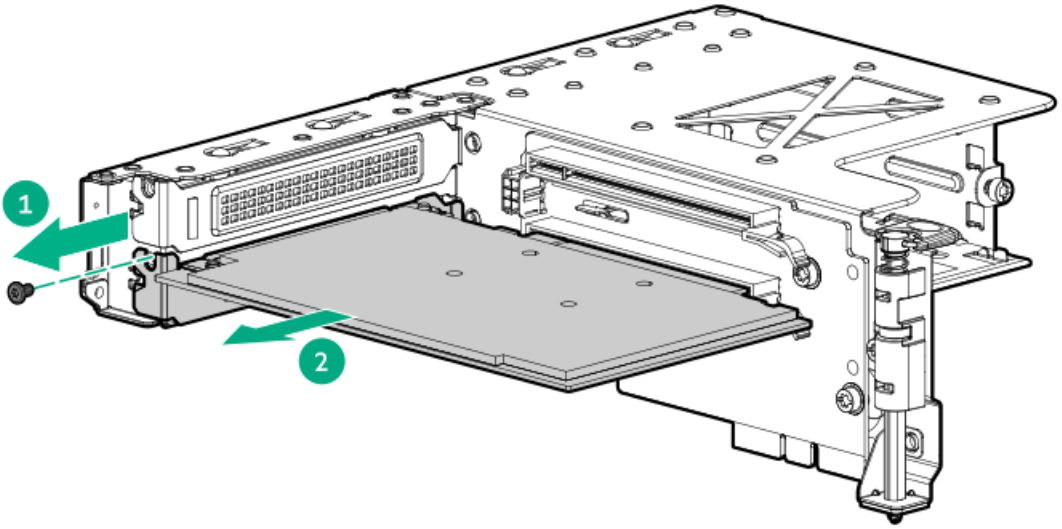

Results

To replace the component, reverse the removal procedure.

Removing and replacing the M.2 SATA SSD add-in card

Prerequisites

Before you perform this procedure, make sure that you have the following items available:

- T-10 Torx screwdriver
- Phillips No. 1 screwdriver

About this task

CAUTION

A discharge of static electricity from a finger or other conductor might damage system boards or other static-sensitive devices. To prevent damage, observe antistatic precautions.

CAUTION

To prevent improper cooling and thermal damage, do not operate the server unless all PCI slots have either a riser slot blank or an expansion card installed.

CAUTION

Before replacing a DIMM, expansion card, or other similar PCA components due to a perceived hardware error, make sure first that the component is firmly seated in the slot. Do not bend or flex circuit boards when reseating components.

Procedure

1. If physically powering down a server with the front bezel installed, remove the front bezel.
2. Power down the server.
3. Remove all power:
   a. Disconnect each power cord from the power source.
   b. Disconnect each power cord from the server.
4. Disconnect all peripheral cables from the server.
5. Remove the server from the rack.
6. Place the server on a flat, level work surface.
7. Remove the access panel.
8. Disconnect all SATA cables from the add-in card .
9. Remove the riser cage.
10. To remove the M.2 SATA SSD add-in card from the primary riser cage:
    a. Press and hold the release latch on the retainer bracket (callout 1).
    b. Open the retainer bracket (callout 2).
    c. Remove the M.2 SATA SSD add-in card (callout 3).

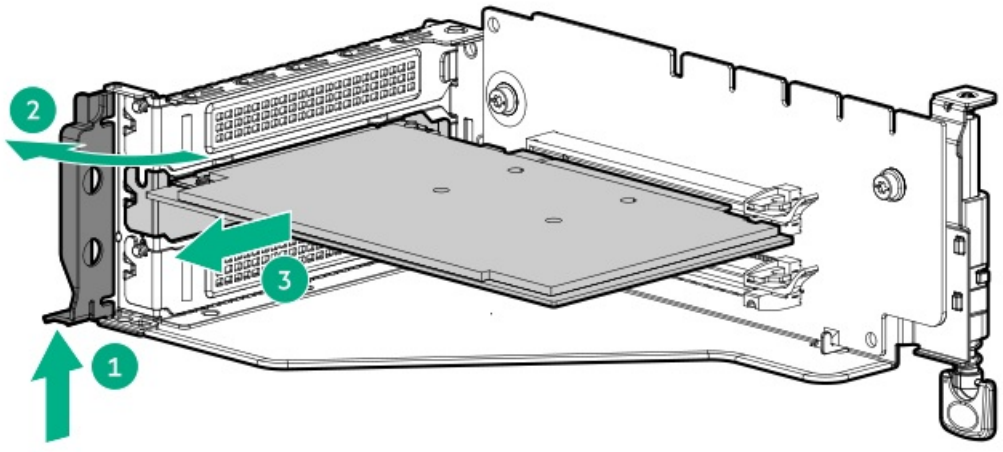

11. To remove the M.2 SATA SSD add-in card from the secondary riser cage:
    a. Remove the screw (callout 1).

       Retain the screw for future use.

b. Remove the M.2 SATA SSD add-in card (callout 2).

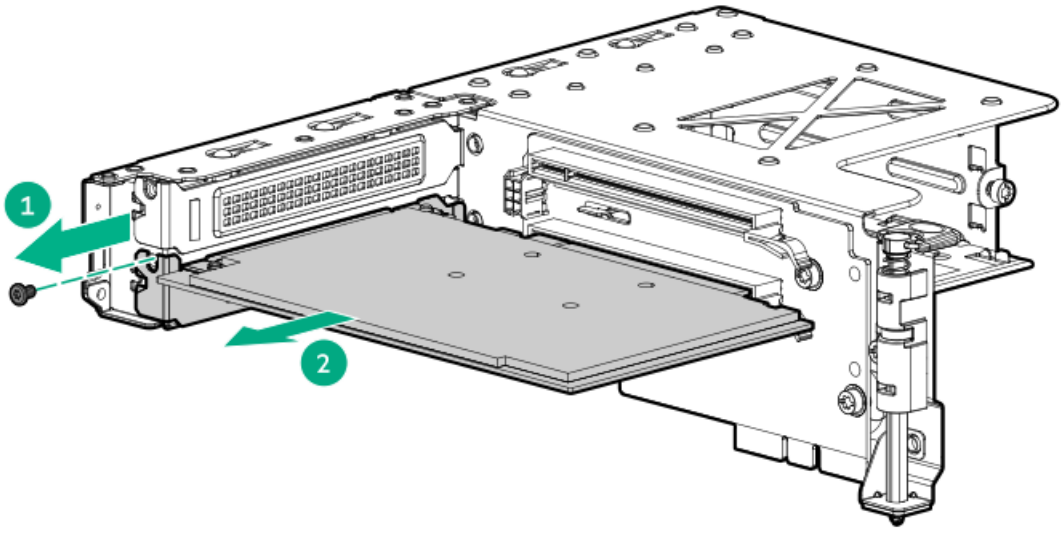

12. If installed, remove all M.2 SATA SSDs from the add-in card.

    Retain all screws and M.2 SATA SSDs for future use.

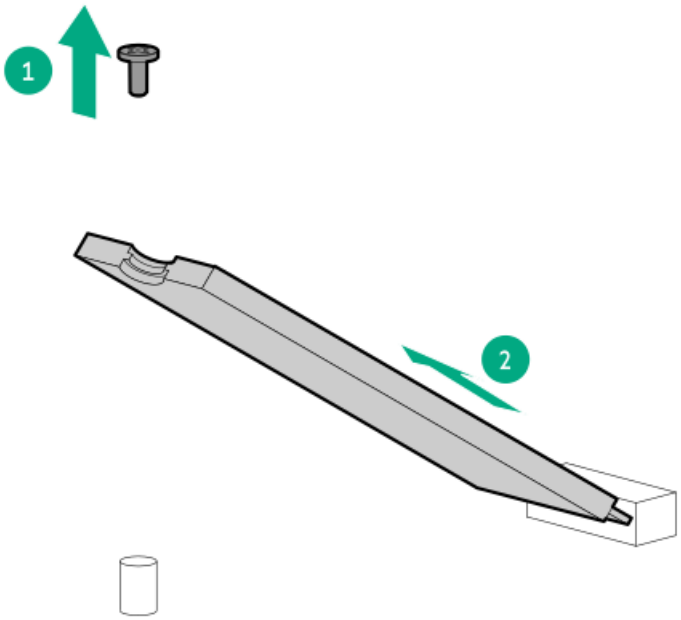

Results

To replace the component, reverse the removal procedure.

Removing and replacing the M.2 SATA SSD from the add-in card

Prerequisites

Before you perform this procedure, make sure that you have the following items available:

- T-10 Torx screwdriver
- Phillips No. 1 screwdriver

About this task

CAUTION

A discharge of static electricity from a finger or other conductor might damage system boards or other static-sensitive devices. To prevent damage, observe antistatic precautions.

CAUTION

To prevent improper cooling and thermal damage, do not operate the server unless all PCI slots have either a riser slot blank or an expansion card installed.

CAUTION

Before replacing a DIMM, expansion card, or other similar PCA components due to a perceived hardware error, make sure first that the component is firmly seated in the slot. Do not bend or flex circuit boards when reseating components.

Procedure

1. If physically powering down a server with the front bezel installed, remove the front bezel.
2. Power down the server.
3. Remove all power:
   a. Disconnect each power cord from the power source.
   b. Disconnect each power cord from the server.
4. Disconnect all peripheral cables from the server.
5. Remove the server from the rack.
6. Place the server on a flat, level work surface.
7. Remove the access panel.
8. Disconnect all SATA cables from the add-in card .
9. Remove the riser cage.
10. Remove the M.2 SATA SSD add-in card .
11. Remove all M.2 SATA SSDs from the add-in card.

    Retain all screws and M.2 SATA SSDs for future use.

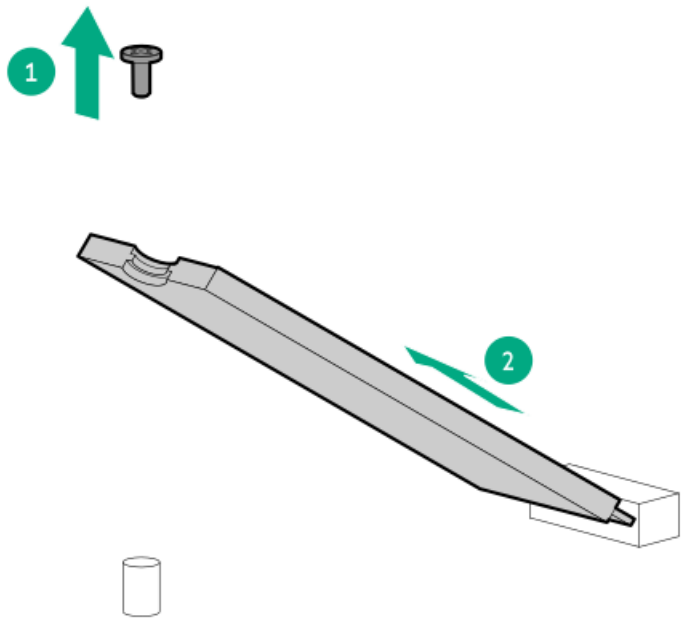

Results

To replace the component, reverse the removal procedure.

Removing and replacing a PCIe riser board

Prerequisites

Before you perform this procedure, make sure that you have a T-15 Torx screwdriver available.

About this task

https://www.hpe.com/support/video-dl345gen10plus-replacing-primary-riser-board

https://www.hpe.com/support/video-dl345gen10plus-replacing-secondary-riser-board

Procedure

1. Power down the server.
2. Remove all power:
   a. Disconnect each power cord from the power source.
   b. Disconnect each power cord from the server.
3. Remove the server from the rack
4. Remove the access panel.
5. Remove the riser cage.
6. Remove all expansion boards from the PCIe riser cage.
7. Remove the PCIe riser board:
   - Primary riser board

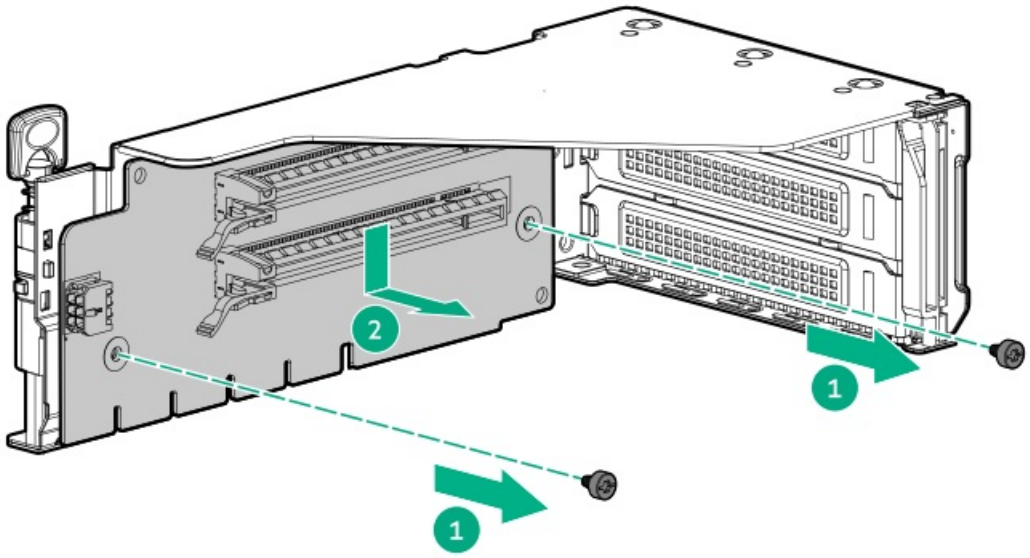

- Secondary riser boards

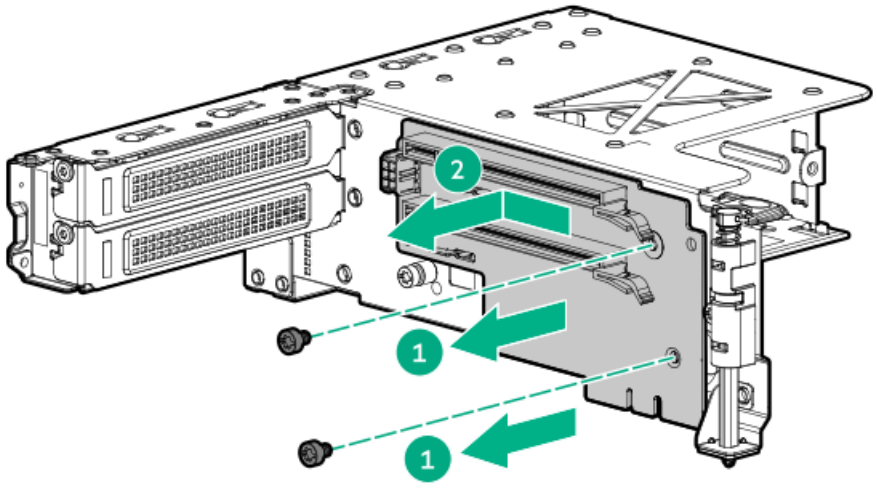

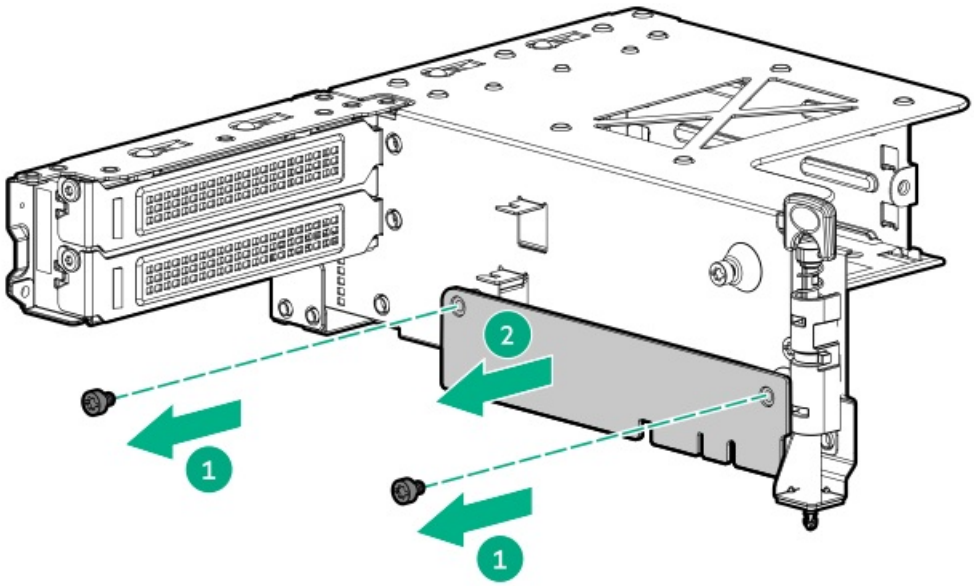

Results

To replace the component, reverse the removal procedure.

Removing and replacing the HPE NS204i-p NVMe OS Boot Device option

Subtopics

Removing and replacing the boot device
Removing and replacing a boot device drive
Relocating the M.2 drive retaining latches

Removing and replacing the boot device

Procedure

1. Observe the following alerts:

   CAUTION

   The boot device and the drives installed on the boot device are not hot-pluggable. To remove the boot device, or a drive from the boot device, you must first power down the server.

   WARNING

   To reduce the risk of personal injury from hot surfaces, allow the drives and the internal system components to cool before touching them.

2. Back up all server data.
3. Power down the server.
4. Remove all power:

a. Disconnect each power cord from the power source.

b. Disconnect each power cord from the server.

5. Do one of the following:
   - Extend the server from the rack.
   - Remove the server from the rack.
6. Place the server on a flat, level work surface.
7. Remove the access panel.
8. Remove the riser cage.
9. Remove the boot device.
10. Remove the drives from the boot device.

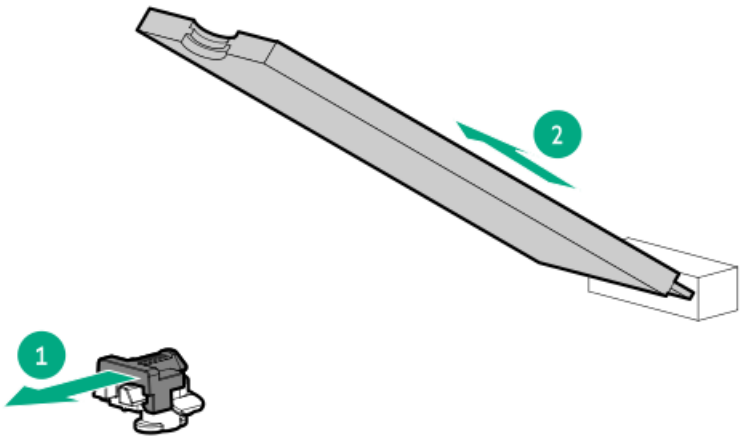

Retain these drives for installation onto the replacement boot device.

Results

To replace the component, reverse the removal procedure.

Removing and replacing a boot device drive

Prerequisites

Review the boot device drive bay LEDs to determine the failed drive.

About this task

The boot device supports two physical drive sizes:

- 22110 (110 mm)
- 2280 (80 mm)

Two drives of the same physical size, or one of each size, can be installed at the same time. Depending on the replacement drive size, you might need to relocate the M.2 drive retaining latches on the boot device.

Procedure

1. Observe the following alerts:

CAUTION

The boot device and the drives installed on the boot device are not hot-pluggable. To remove the boot device, or a drive from the boot device, you must first power down the server.

WARNING

To reduce the risk of personal injury from hot surfaces, allow the drives and the internal system components to cool before touching them.

2. Back up all server data.
3. Power down the server.
4. Remove all power:
   a. Disconnect each power cord from the power source.
   b. Disconnect each power cord from the server.
5. Do one of the following:
   - Extend the server from the rack.
   - Remove the server from the rack.
6. Place the server on a flat, level work surface.
7. Remove the access panel.
8. Remove the riser cage.
9. Remove the boot device.
10. Remove the failed drive from the boot device.

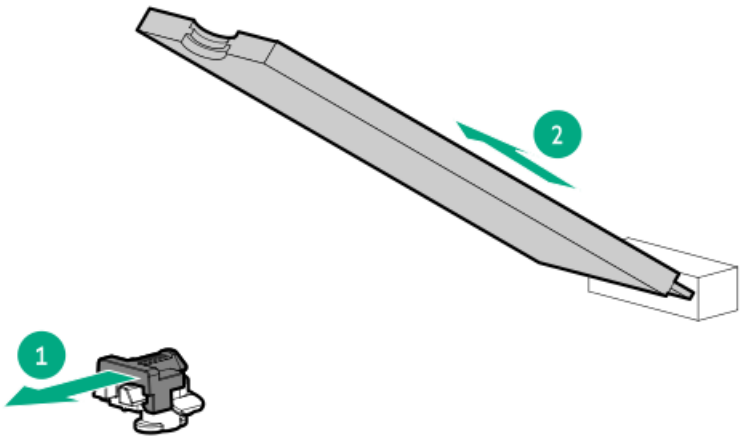

Results

To replace the component, reverse the removal procedure.

Relocating the M.2 drive retaining latches

Procedure

1. If your spare kit includes an 80 mm replacement drive, remove the retaining latch from its current location.

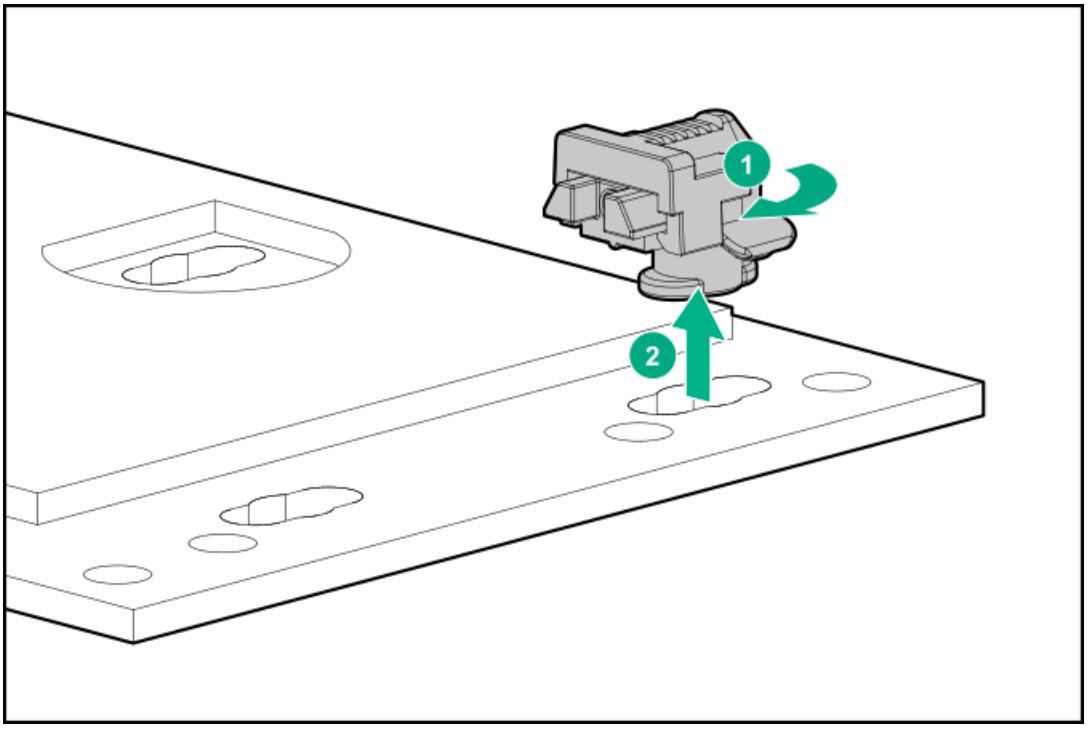

2. Install the retaining latch at the 80 mm drive location.

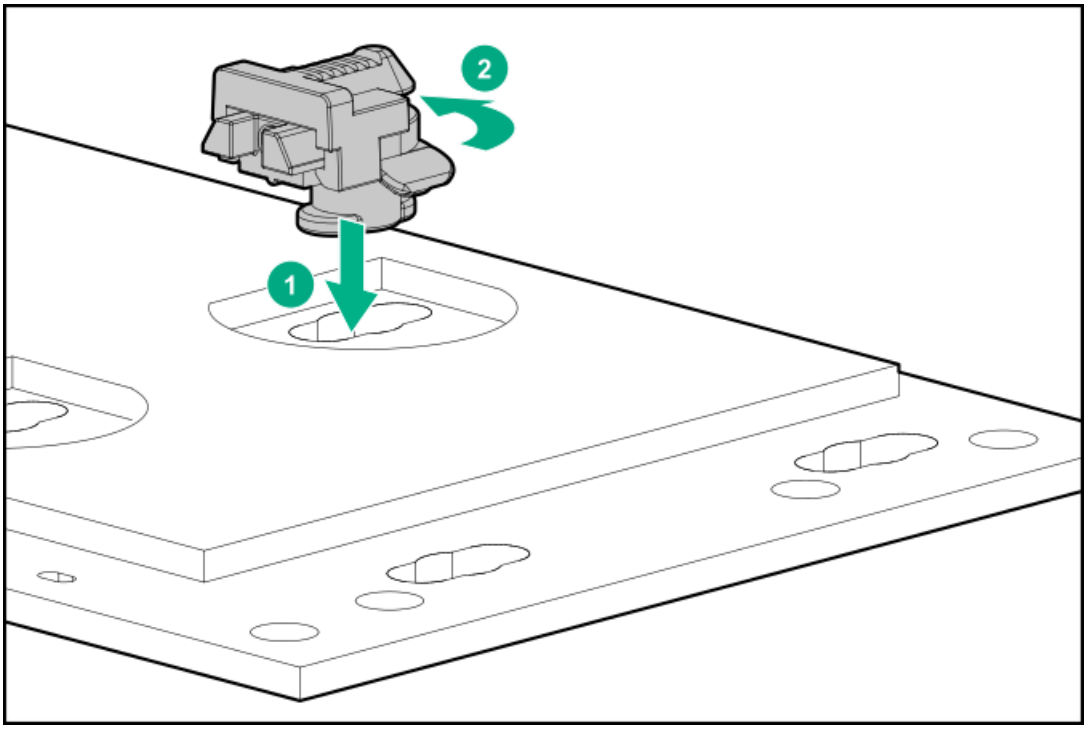

Removing and replacing the Pensando DSP DSC-25 2p SFP28 card

Subtopics

Decommissioning the Pensando DSP DSC-25 2p SFP28 card

Removing the Pensando DSP DSC-25 2p SFP28 card
Replacing the Pensando DSP DSC-25 2p SFP28 card

Decommissioning the Pensando DSP DSC-25 2p SFP28 card

About this task

Procedure

Before removing the DSC-25 card from the server, you must first decommission the card using the Pensando Policy and Services Manager (PSM).

For more information, see Pensando Distributed Services Card for Single-Wire Management (DSC-25-SWM) Removal/Replacement Guide on the Hewlett Packard Enterprise website (**https://www.hpe.com/support/dsc25-replacement**).

Removing the Pensando DSP DSC-25 2p SFP28 card

Prerequisites

The DSC-25 card has been decommissioned.

About this task

NOTE

Images might differ from the actual product.

Procedure

1. Observe the following alerts:

   WARNING

   To reduce the risk of personal injury from hot surfaces, allow the drives and the internal system components to cool before touching them.

   CAUTION

   A discharge of static electricity from a finger or other conductor might damage system boards or other static-sensitive devices. To prevent damage, observe antistatic precautions.

   CAUTION

   To prevent improper cooling and thermal damage, do not operate the server unless all PCI slots have either an expansion slot cover or an expansion board installed.

2. Power down the server.
3. Remove all power:
   a. Disconnect each power cord from the power source.
   b. Disconnect each power cord from the server.
4. Remove the server from the rack

5. Remove the access panel.

> **CAUTION**
>
> Do not operate the server for long periods with the access panel open or removed. Operating the server in this manner results in improper airflow and improper cooling that can lead to thermal damage.

6. Remove the riser cage
7. Remove the DSC-25 card from the slot.

Replacing the Pensando DSP DSC-25 2p SFP28 card

Procedure

1. Install the DSC-25 card into the riser slot.
2. Install the riser cage.
3. Install the access panel.
4. Slide the server into the rack.
5. Connect each power cord to the server.
6. Connect each power cord to the power source.
7. Power up the server.
8. Admit the new card to the Pensando Policy and Services Manager (PSM).

   For more information, see Pensando Distributed Services Card for Single-Wire Management (DSC-25-SWM) Removal/Replacement Guide on the Hewlett Packard Enterprise website (**https://www.hpe.com/support/dsc25-replacement**).

Removing and replacing an accelerator

Prerequisites

Before you perform this procedure, make sure that you have a T-10 Torx screwdriver available.

Procedure

1. Power down the server.
2. Remove all power:
   a. Disconnect each power cord from the power source.
   b. Disconnect each power cord from the server.
3. Remove the server from the rack
4. Remove the access panel.
5. For full-lenght accelerators, release the expansion board retainers .

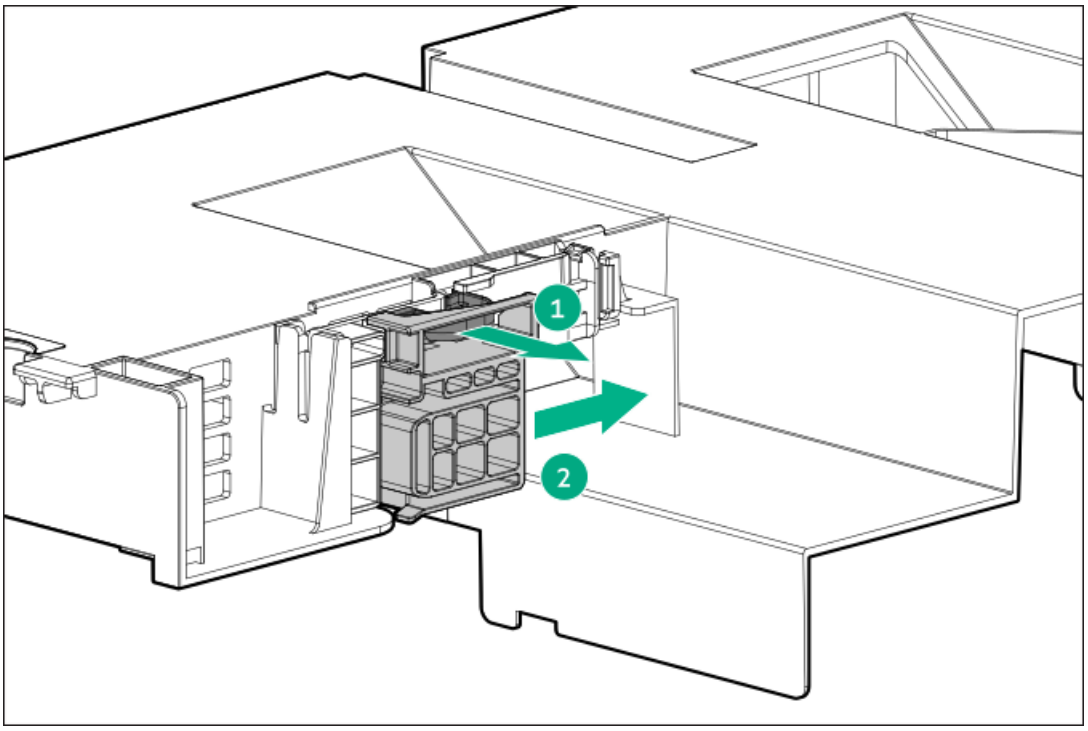

6. Remove the air baffle.
7. Disconnect the corresponding accelarator power cable.

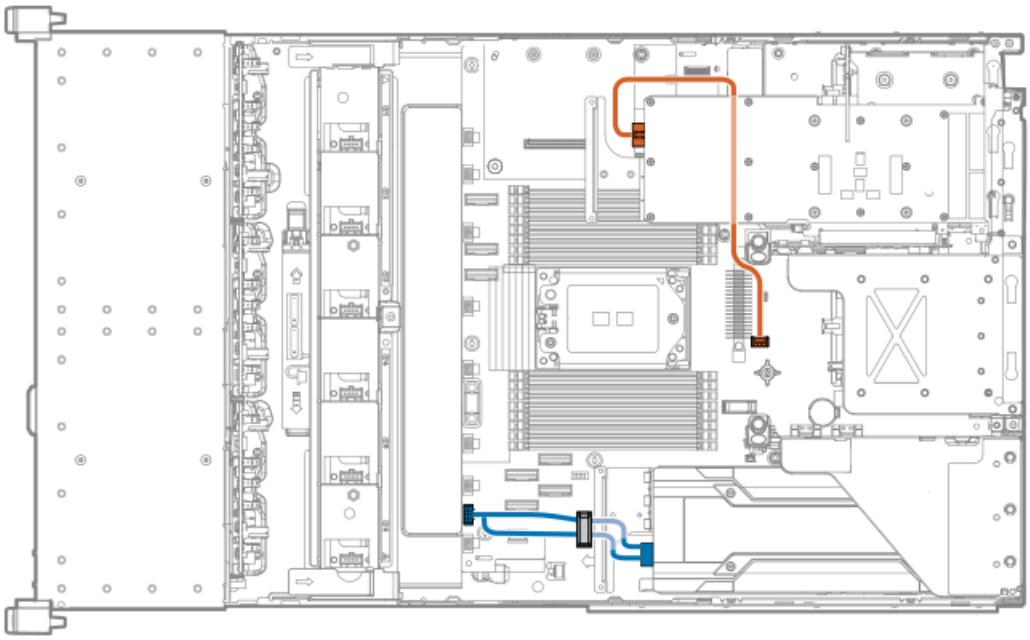

8. Remove the riser cage.
9. Remove the accelerator from the riser cage

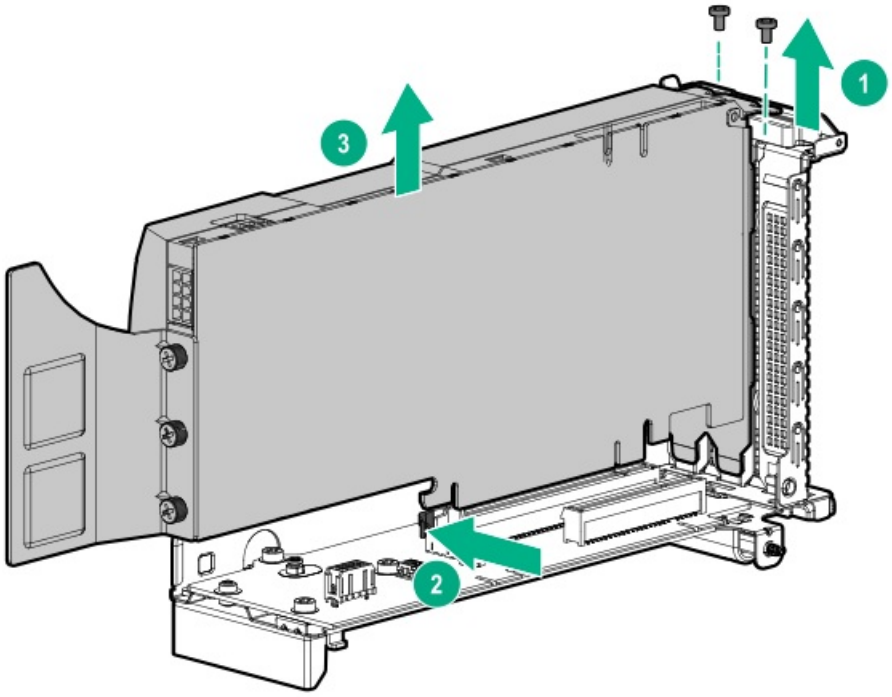

Results

To replace the component, reverse the removal procedure.

Removing and replacing the LFF bezel ear

Prerequisites

Before you perform this procedure, make sure that you have a T-10 Torx screwdriver available.

About this task

https://www.hpe.com/support/video-dl345gen10plus-replacing-bezel-ear-LFF-chassis

Procedure

1. Power down the server.
2. Remove all power:
   a. Disconnect each power cord from the power source.
   b. Disconnect each power cord from the server.
3. Remove the server from the rack
4. Remove the access panel.
5. Remove the fan cage.
6. Remove the air baffle.
7. Disconnect the front I/O cable.

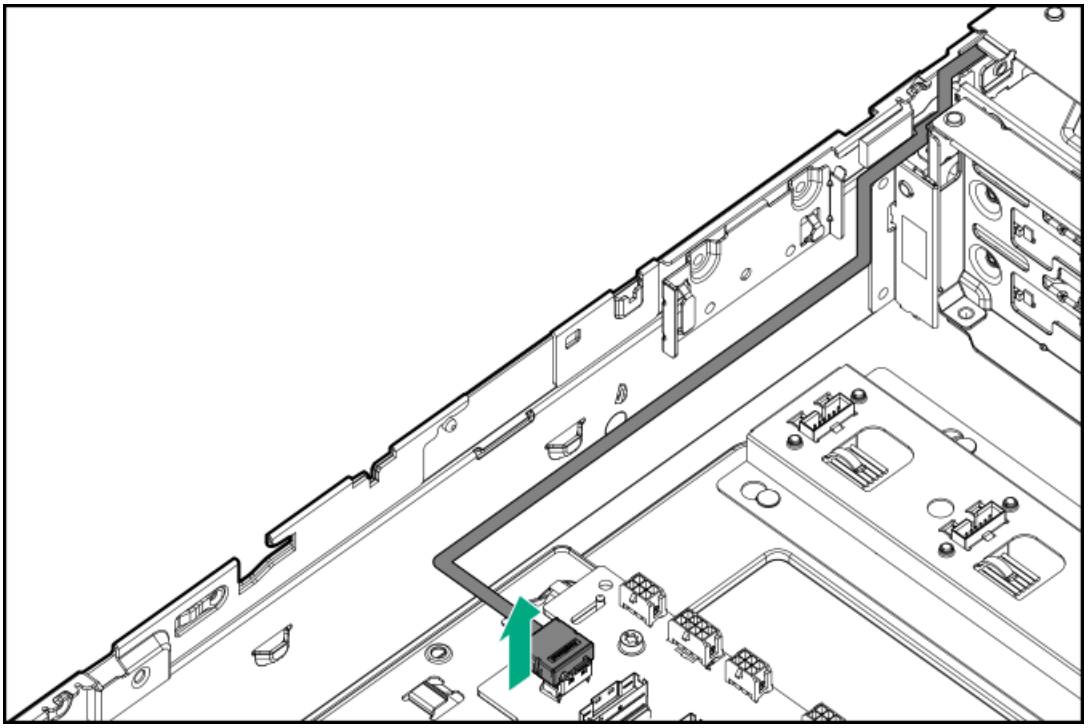

8. Remove the cable protection panel behind the bezel ear.

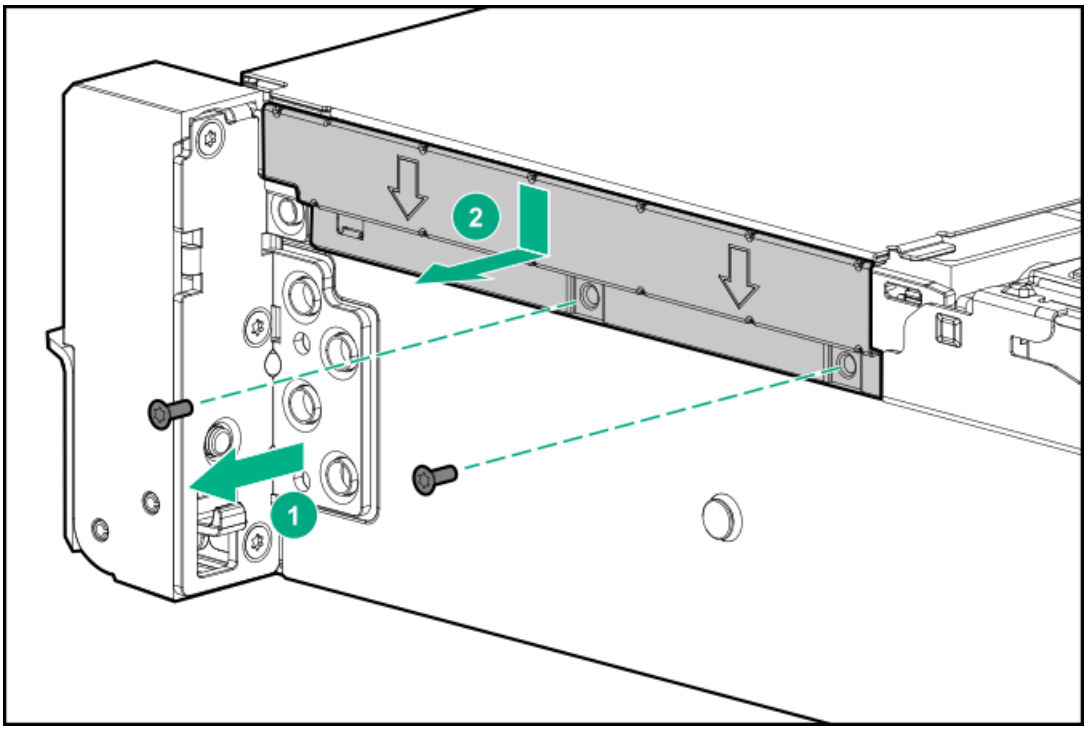

9. Remove the bezel ear.

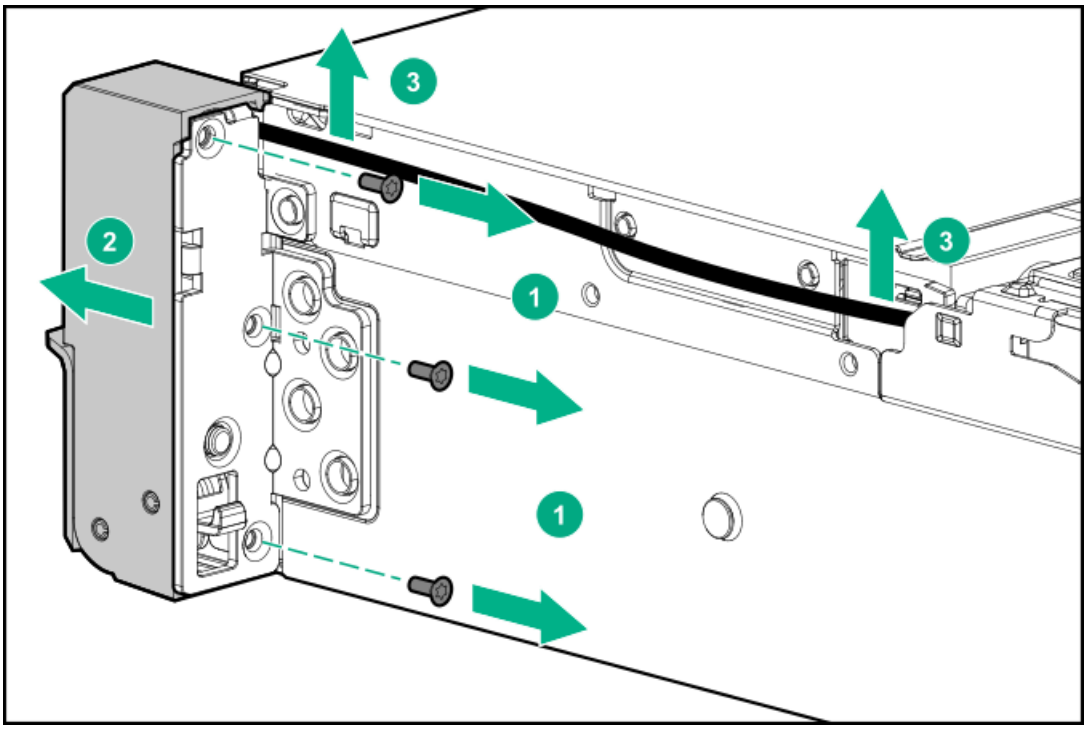

Results

To replace the component, reverse the removal procedure.

Removing and replacing the SFF front I/O module

Prerequisites

Before you perform this procedure, make sure that you have a T-10 Torx screwdriver available.

About this task

https://www.hpe.com/support/video-dl345gen10plus-replacing-SFF-front-IO-asembly

Procedure

1. Power down the server.
2. Remove all power:
   a. Disconnect each power cord from the power source.
   b. Disconnect each power cord from the server.
3. Do one of the following:
   - Extend the server from the rack.
   - Remove the server from the rack.
4. Remove the access panel.
5. Remove the air baffle.
6. Disconnect the front I/O module cable.
7. Remove the SFF front I/O module.

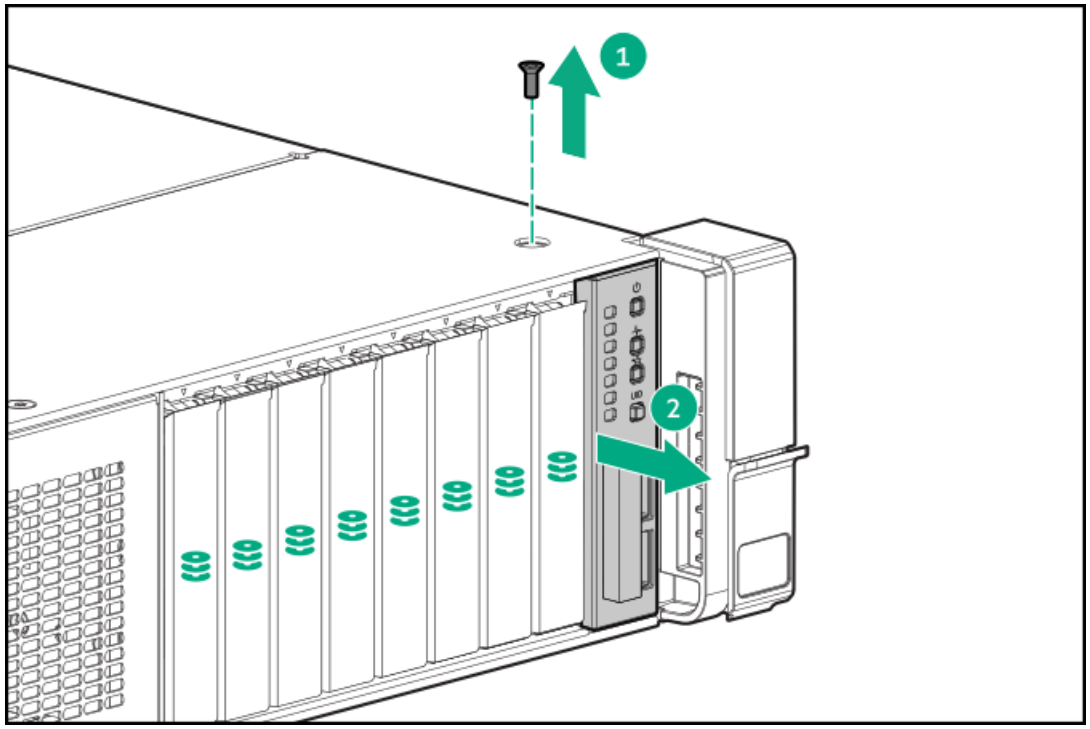

Results

To replace the component, reverse the removal procedure.

Removing and replacing the bezel ear

Prerequisites

Before you perform this procedure, make sure that you have a T-10 Torx screwdriver available.

About this task

https://www.hpe.com/support/video-dl345gen10plus-replacing-bezel-ear

Procedure

1. Power down the server.
2. Remove all power:
   a. Disconnect each power cord from the power source.
   b. Disconnect each power cord from the server.
3. Remove the server from the rack
4. Remove the bezel ear.

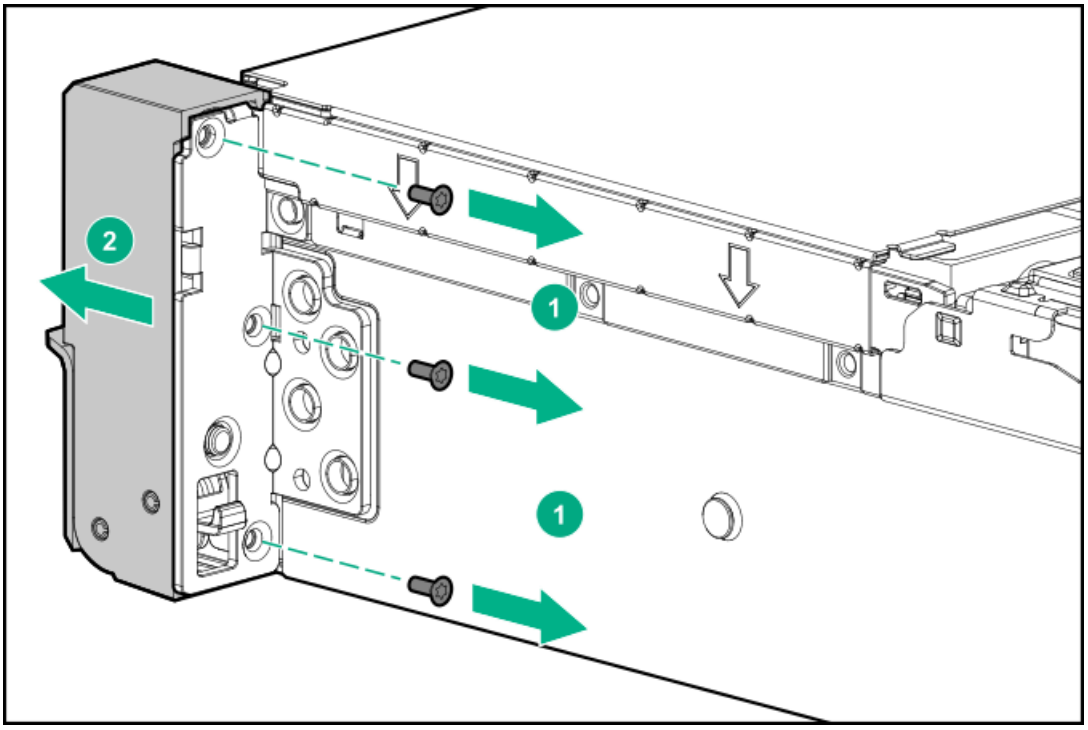

Results

To replace the component, reverse the removal procedure.

Removing and replacing the chassis intrusion detection switch

Procedure

1. Power down the server.
2. Remove all power:
   a. Disconnect each power cord from the power source.
   b. Disconnect each power cord from the server.
3. Remove the server from the rack
4. Remove the access panel.
5. Remove the chassis intrusion detection switch.

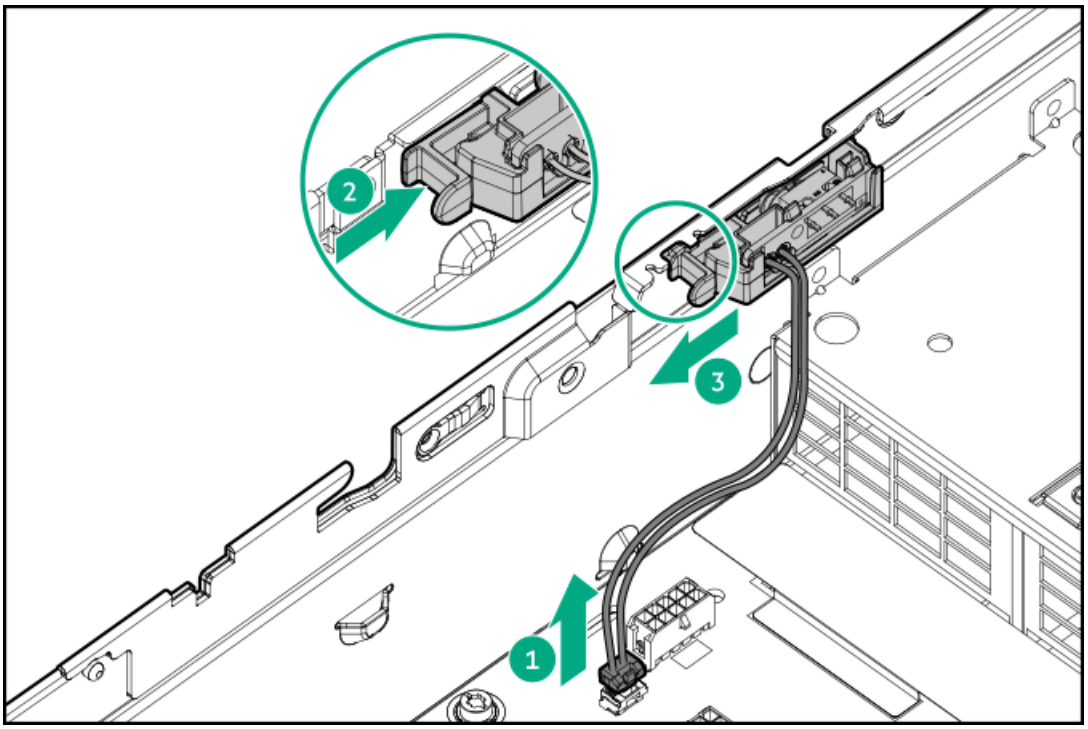

Results

To replace the component, reverse the removal procedure.

Removing and replacing the OCP NIC 3.0 adapter

About this task

https://www.hpe.com/support/video-dl345gen10plus-replacing-OCP-NIC-3-0-adapter

Procedure

1. Power down the server.
2. Remove all power:
   a. Disconnect each power cord from the power source.
   b. Disconnect each power cord from the server.
3. Remove the server from the rack
4. Remove the access panel.
5. Remove the primary riser cage.
6. Remove the OCP NIC 3.0 adapter.

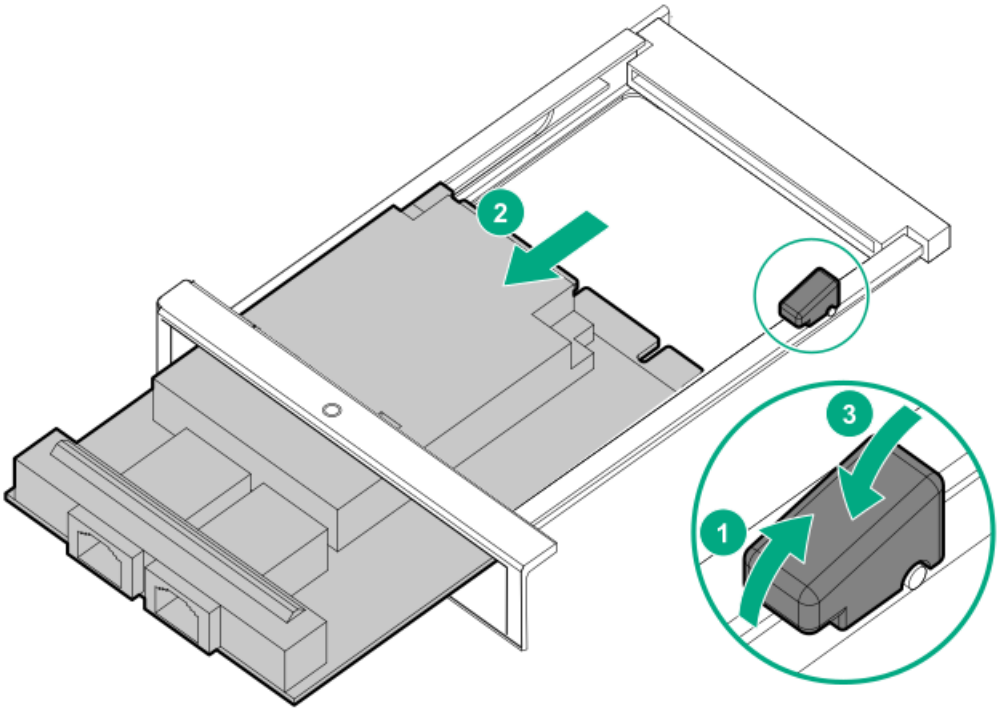

To replace the component, reverse the removal procedure.

Removing and replacing the serial port

Prerequisites

Before you perform this procedure, make sure that you have a hex screwdriver available.

Procedure

1. Power down the server.
2. Remove all power:
   a. Disconnect each power cord from the power source.
   b. Disconnect each power cord from the server.
3. Remove the server from the rack
4. Remove the access panel.
5. Remove the secondary riser cage.
6. Remove the serial port screws.

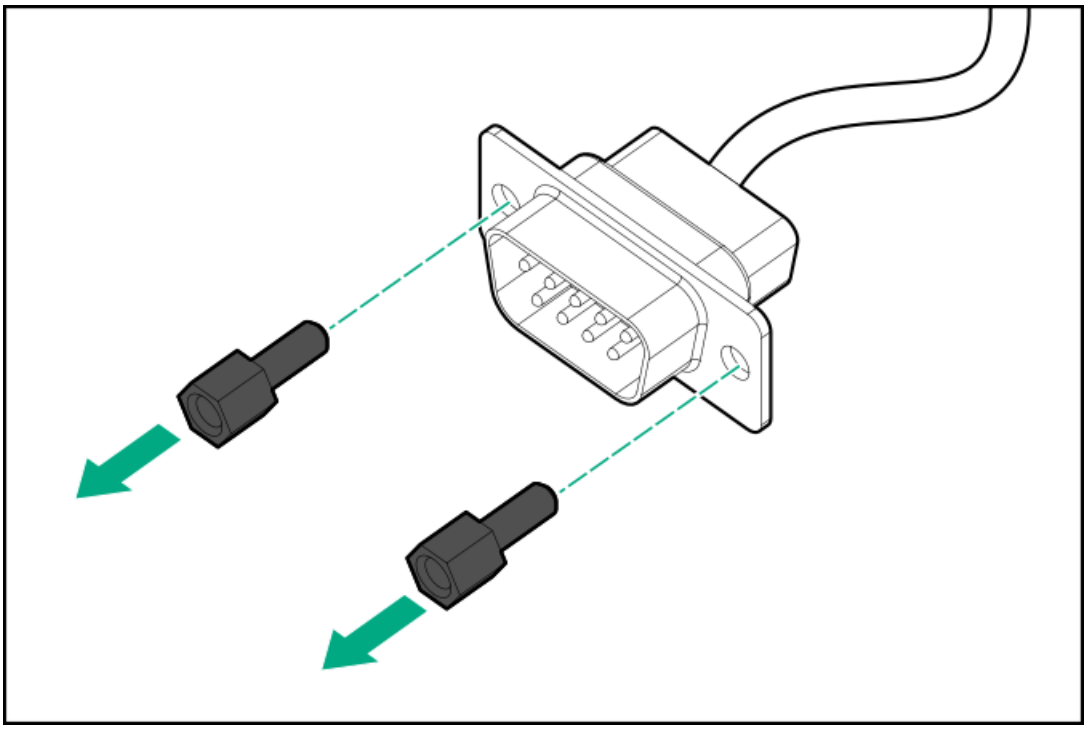

7. Disconnect the serial port cable, and then detach it from the USB port.

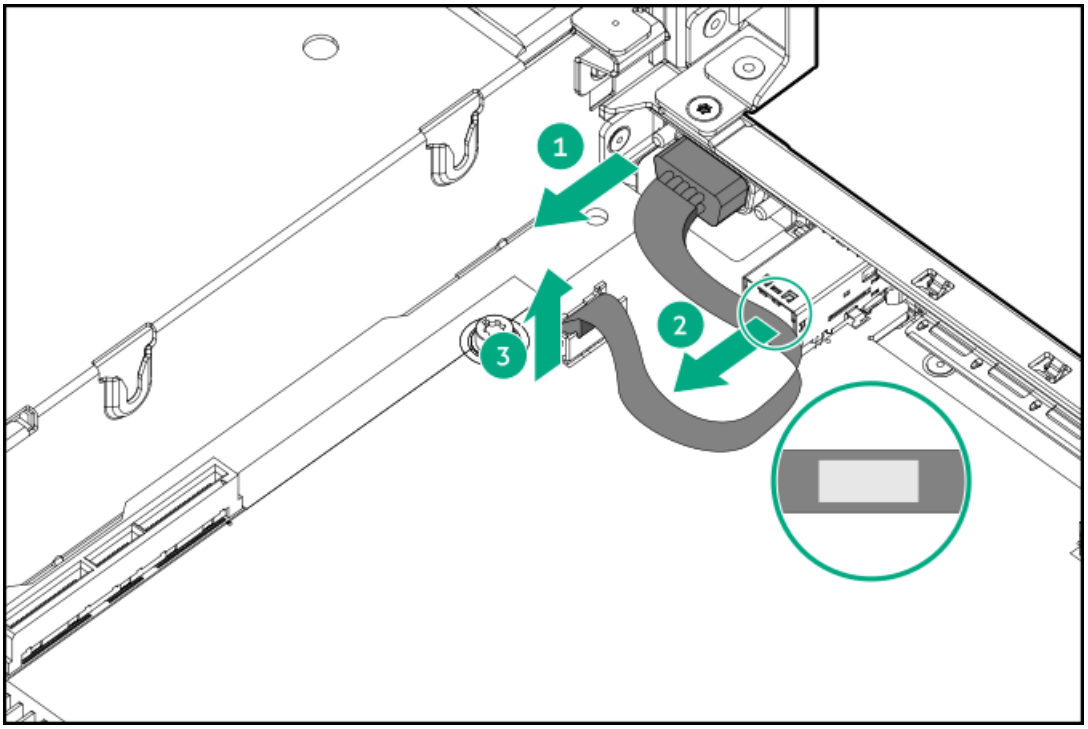

Results

To replace the component, reverse the removal procedure.

System battery replacement

If the server no longer automatically displays the correct date and time, then replace the battery that provides power to the real-time clock. Under normal use, battery life is 5–10 years.

Subtopics

System battery information
Replace the system battery

System battery information

The server contains an internal lithium manganese dioxide, a vanadium pentoxide, or an alkaline battery that provides power to the real-time clock.

WARNING

If this battery is not properly handled, a risk of the fire and burns exists. To reduce the risk of personal injury:

- **Do not attempt to recharge the battery.**
- **Do not expose the battery to temperatures higher than 60°C (140°F).**
- **Do not expose the battery to extremely low air pressure as it might lead to explosion or leakage of flammable liquid or gas.**
- **Do not disassemble, crush, puncture, short external contacts, or dispose the battery in fire or water.**

Replace the system battery

Procedure

1. Power down the server.
2. Remove all power:
   a. Disconnect each power cord from the power source.
   b. Disconnect each power cord from the server.
3. Do one of the following:
   - Extend the server from the rack.
   - Remove the server from the rack.
4. Remove the access panel.
5. Remove the secondary riser cage.
6. Locate the battery on the system board.
7. Remove the system battery.

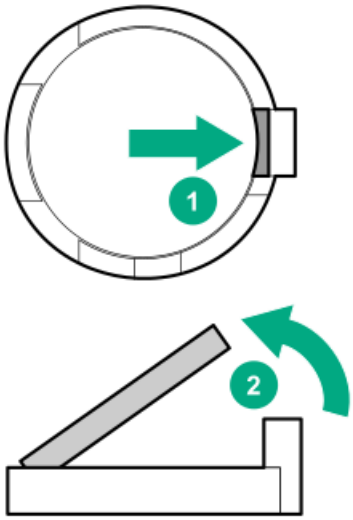

8. Insert the system battery with the "+" side facing up on the socket, and then press the battery down to secure it in place.

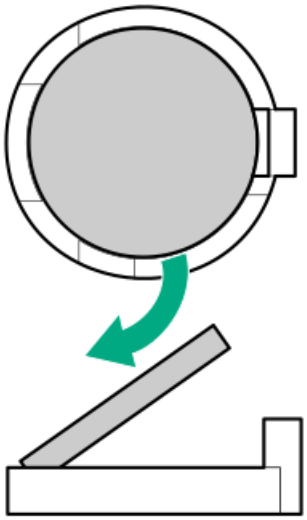

Results

For more information about battery replacement or proper disposal, contact an authorized reseller or a support specialist.

System board replacement

- Removing the system board
- Replacing the system board
- Re-entering the server serial number and product ID

Subtopics

Removing the system board
Replacing the system board

Re-entering the server serial number and product ID

Removing the system board

Prerequisites

CAUTION

Be sure to have the BitLocker recovery key/password prior to replacing the system board. If you do not have the key/password, you will need to re-install the OS.

Before you perform this procedure, make sure that you have the following items available:

- T-15 screwdriver (for system board screws)
- T-20 screwdriver for processor and heatsink screws
- Alcohol wipe

About this task

https://www.hpe.com/support/video-dl345gen10plus-replacing-system-board

Procedure

1. Power down the server.
2. Remove all power:
   a. Disconnect each power cord from the power source.
   b. Disconnect each power cord from the server.
3. Remove the server from the rack
4. Remove all power supplies.
5. Remove the access panel.
6. Remove the air baffle.
7. Remove all DIMMs.
8. Remove the fan cage.
9. Remove the riser cages.
10. Remove the OCP network adapter.
11. Allow the existing heatsink to cool.
12. Remove the heatsink:

CAUTION

To prevent mechanical damage or depositing oil on your hands or other contaminants to the heatsink contact surface, hold the heatsink only by the edge of its baseplate. Do not touch the heatsink fins.

CAUTION

Heatsink screws must be tightened and loosened in alternating sequence as shown on the heatsink label.

a. Use a T-20 screwdriver to loosen the captive screws in the sequence specified on the heatsink label.

b. Lift the heatsink away from the system board.

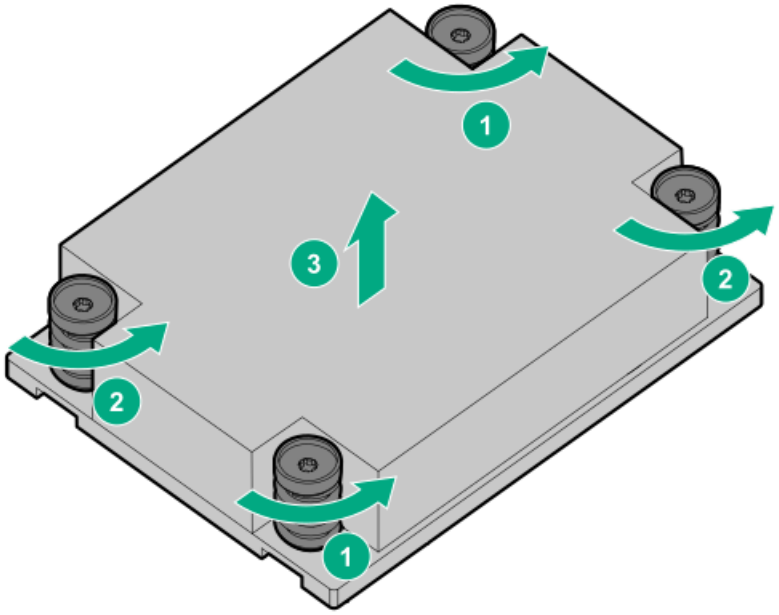

c. Place the heatsink on a flat work surface with its contact side facing up.

13. Use an alcohol wipe to remove the existing thermal grease from the heatsink and the processor.

    Allow the alcohol to evaporate before continuing.

14. Use a screwdriver to loosen the three captive screws in the sequence shown and then pivot the force frame up.

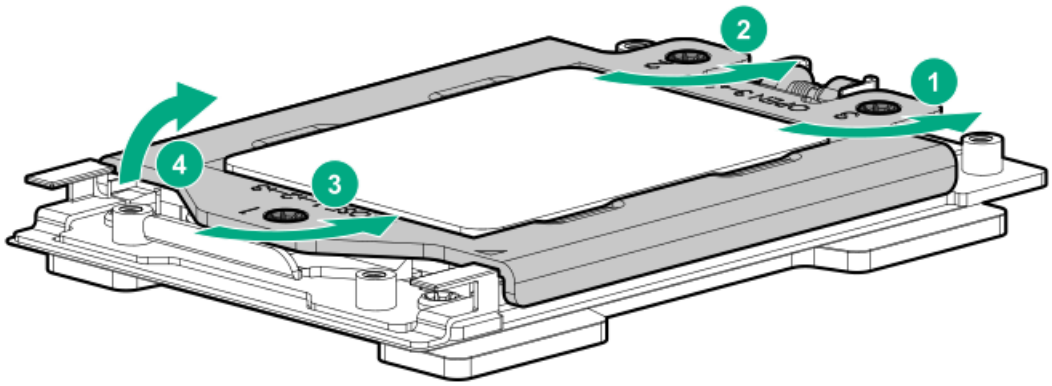

15. Remove the processor:

    a. Hold the lift tabs near the front end of the rail frame, and then pivot the rail frame to the vertical position.

    b. Slide the processor out of the rail frame.

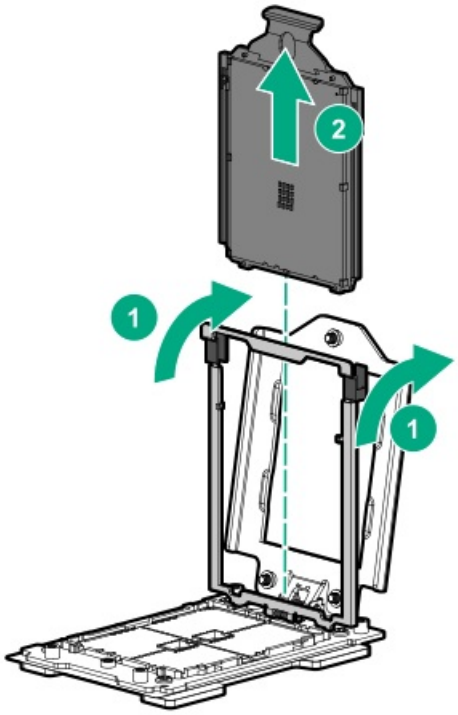

16. Disconnect all cables connected to the system board.
17. Remove the system board.

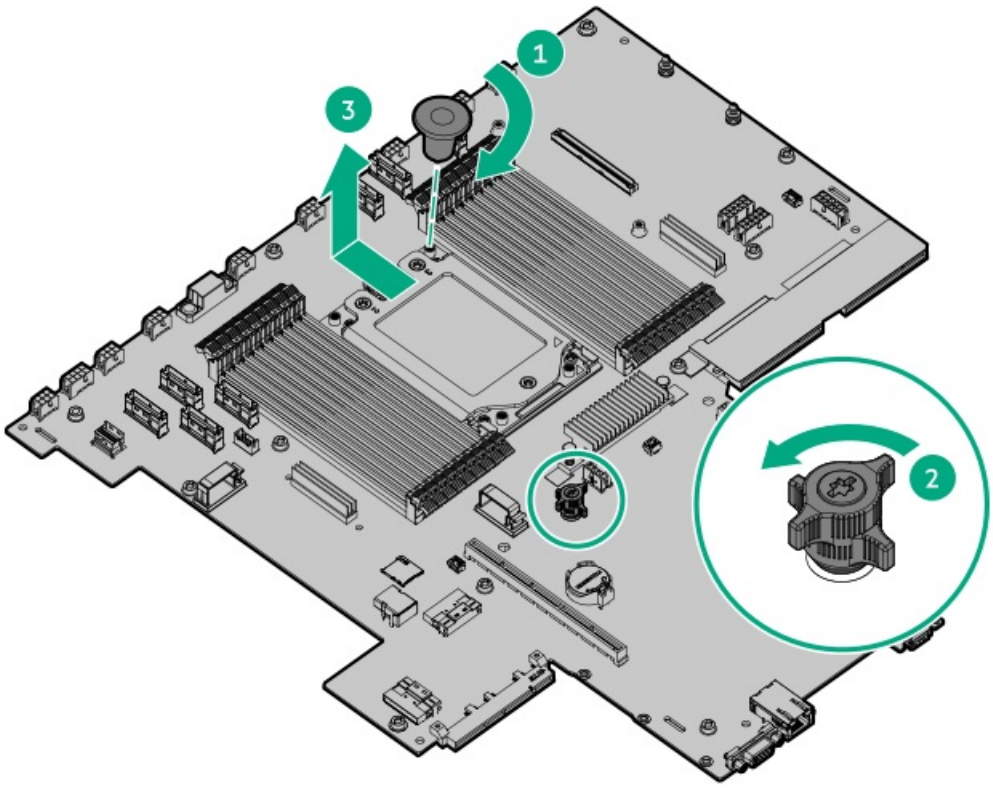

Replacing the system board

Prerequisites

CAUTION

Be sure to have the BitLocker recovery key/password prior to replacing the system board. If you do not have the key/password, you will need to re-install the OS.

CAUTION

Do not use One-button secure erase (OBSE). OBSE should only be used to decommission or repurpose a system. **This option erases all data. Be sure to disconnect any drives, SANs, NAS, or other shared/external storage devices that you do not want erased.**

Before you perform this procedure, make sure that you have the following items available:

- T-15 screwdriver (for system board screws)
- T-20 screwdriver for processor and heatsink screws
- Alcohol wipe
- Thermal grease (spare part number 777298-001)

About this task

https://www.hpe.com/support/video-dl345gen10plus-replacing-system-board

Procedure

1. Install the spare system board.

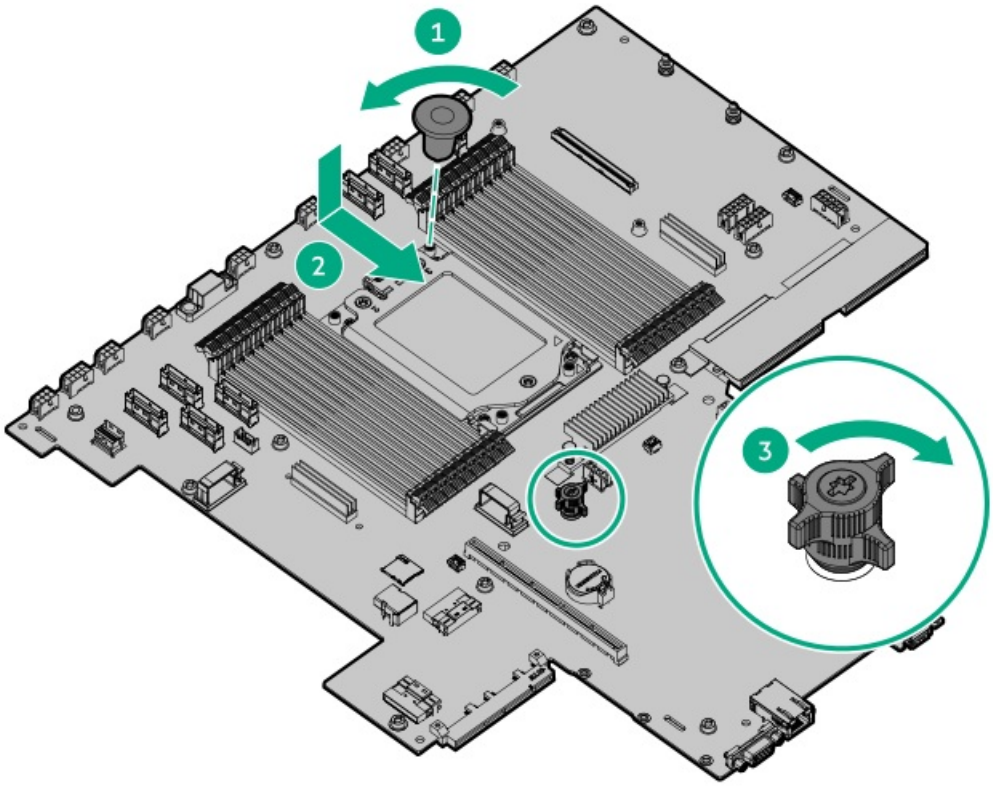

2. Use a screwdriver to loosen the three captive screws in the sequence shown and then pivot the force frame up.

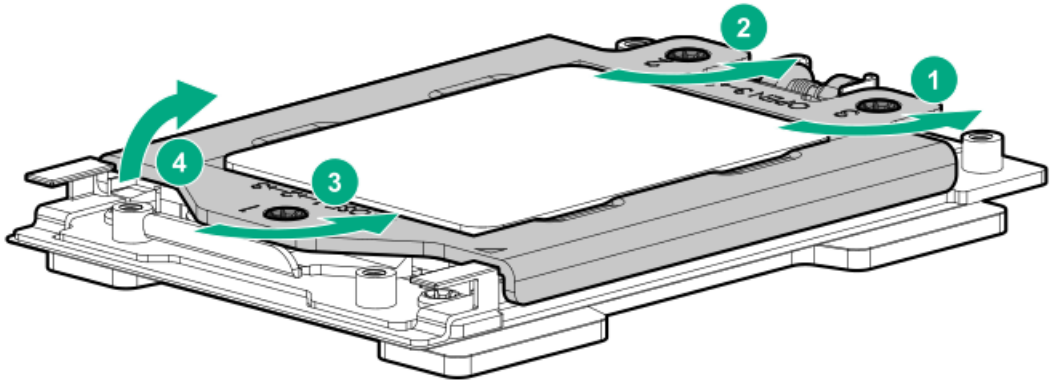

3. Remove the external cap.
   a. Hold the lift tabs near the front end of the rail frame, and then pivot the rail frame to the vertical position.
   b. Slide the external cap out of the rail frame.

   Retain the external cap for future use.

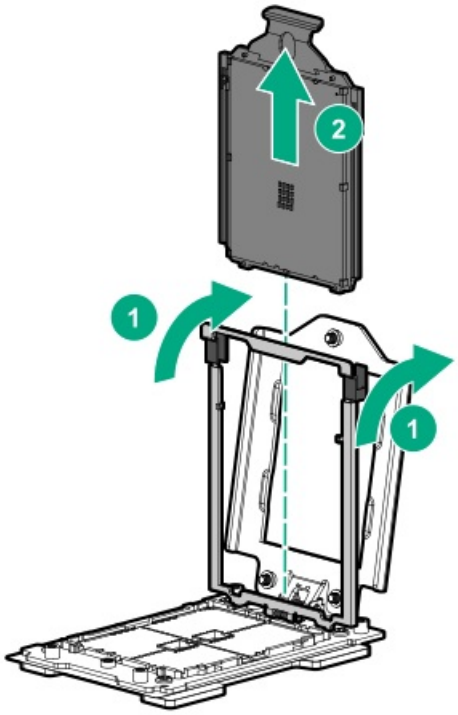

4. Install the processor:
   a. Hold the processor by its carrier handle and slide the processor into the rail frame until it engages with a click sound.
   b. Remove the pin field cover cap.

   CAUTION

   To prevent the risk of damaging the pins in the processor socket, do not reinstall the pin field cover cap after removing it.

   c. Hold the lift tabs near the front end of the rail frame, and then pivot the rail frame to the closed position.

   A click sound indicates that the rail frame is properly engaged.

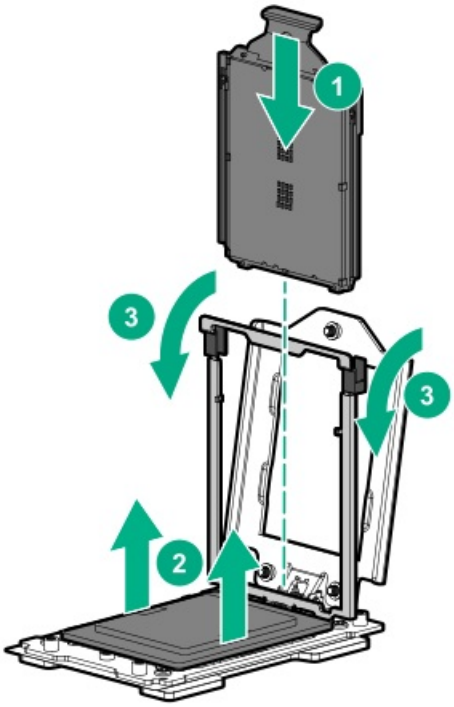

5. Close the force frame.

> **CAUTION**
>
> Do not overtighten the screws as this might damage the system board or the processor socket.

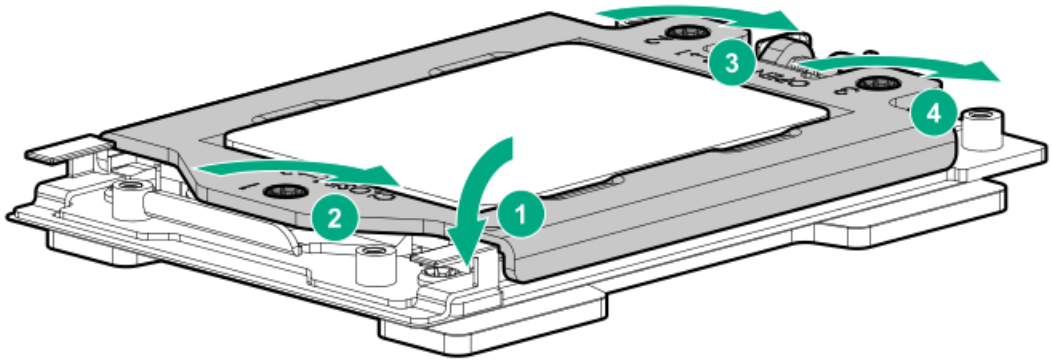

6. Apply new thermal grease to the processor in the pattern shown in the following image. Use the full contents of the thermal grease syringe.

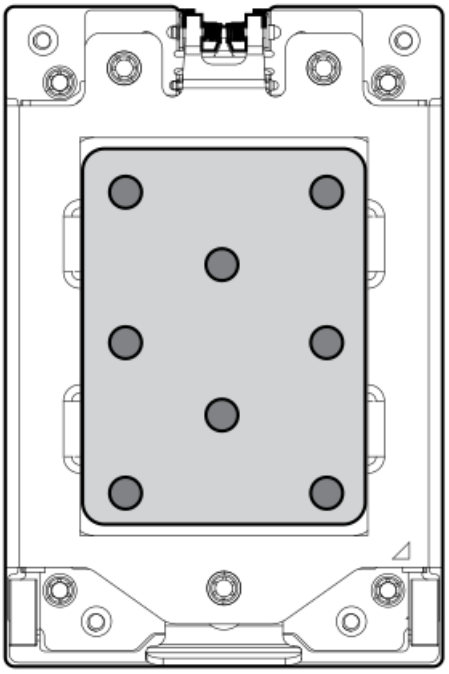

7. Remove the thermal interface protective cover from the new heatsink.
8. Install the heatsink.

> **CAUTION**
>
> To prevent mechanical damage or depositing oil on your hands or other contaminant to the heatsink contact surface, hold the heatsink only by the edge of its base plate. Do not touch the heatsink fins.

> **CAUTION**
>
> To prevent thermal failure or component damage, do not move the heatsink once the bottom of its base plate touches the top of the processor. Excessive heatsink movement can cause the thermal grease to smear and become uneven. Voids in the compound can adversely impact the transfer of heat away from the processor.

> **CAUTION**
>
> Heatsink screws must be tightened and loosened in alternating sequence as shown on the heatsink label. Do not overtighten the screws as this might damage the system board or the processor socket.

a. Position the heatsink on top of the processor, ensuring that it is properly seated before securing the screws.
b. Use a T-20 screwdriver to tighten the captive screws in the sequence specified on the heatsink label until fully seated.

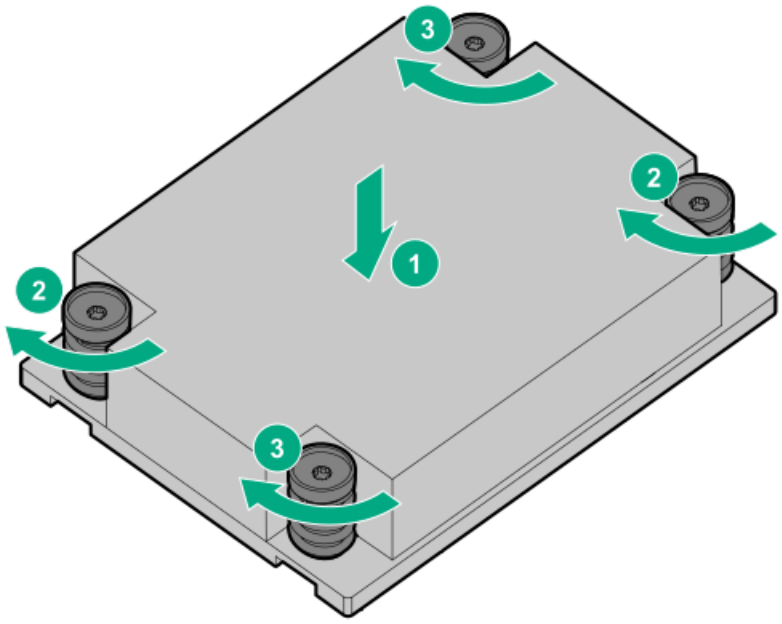

9. Install all components removed from the failed system board.
10. Install the access panel.
11. Install the power supplies.
12. Power up the server.
13. Ensure all firmware, including option cards and embedded devices, is updated to the same versions to ensure that the latest drivers are being used.
14. Re-enter any Secure Boot Keys that were previously added in the Secure Boot configuration.
15. Re-enter the server serial number and product ID.
16. See the applicable OS documentation for procedures and recommendations on restoring the OS and accessing drive data.

CAUTION

(For Microsoft Windows only) After replacing the system board, Hewlett Packard Enterprise recommends using BitLocker Recovery to restore the OS and access drive data. The recovery key/password previously generated during the initial server installation and BitLocker setup is required to enter Recovery Mode.

For more information about BitLocker Recovery, see the **Microsoft website**.

Re-entering the server serial number and product ID

About this task

After replacing the system board, re-enter the system serial number and product ID, and configure the date and time settings.

Procedure

1. Access the UEFI System Utilities. During POST, press **F9**.
2. From the System Utilities screen, select System Configuration > BIOS/Platform Configuration (RBSU) > Advanced Options > Advanced

Service Options.

3. Select Serial Number, and then press **Enter**.

   The following warning appears:

   ```
   The serial number is modified by qualified service personnel and must
   match the serial number located on the chassis.
   ```

4. Click OK.
5. Type the serial number, and then press **Enter**.
6. Select Product ID, and then press **Enter**.

   The following warning appears:

   ```
   Product ID is modified only by qualified service personnel. This value
   must match the product ID located on the chassis.
   ```

7. Type the product ID, and then press **Enter**.
8. From the System Utilities screen, select System Configuration > BIOS/Platform Configuration (RBSU) > Date and Time.
9. Configure the date and time settings:
   - Date (mm-dd-yyyy)—Enter the date in a month-day-year (mm-dd-yyyy) format.
   - Time (hh:mm:ss)—Enter the time in a 24-hour format (hh:mm:ss) format.
   - Hour Format—Select either a 12- or 24-hours format. (This menu is supported in Gen10 Plus and later servers.)
   - Time Format
     - Coordinated Universal Time (UTC)—Calculates the time stored in the hardware real-time clock (RTC) from the associated Time Zone setting.
     - Local Time—Removes the use of the Time Zone setting. This option is useful for addressing interaction issues in Windows operating systems set in legacy BIOS boot mode.
     - Time Zone—Select the time zone for the system.
     - Daylight Savings Time—Select whether to enable DST in the system time setting.
10. To confirm and save the settings, press **F12**.

    The server automatically reboots.

Results

The installation is complete.

HPE Trusted Platform Module 2.0 Gen10 Plus option

The option is not a customer-removable part.

CAUTION

If the TPM is removed from the original server and powered up on a different server, data stored in the TPM including keys will be erased.

If you suspect a TPM board failure, leave the TPM installed and remove the system board (system board). Contact a Hewlett Packard Enterprise authorized service provider for a replacement system board and TPM module.

Troubleshooting

- NMI functionality
- Troubleshooting resources

Subtopics

NMI functionality
Troubleshooting resources

NMI functionality

An NMI crash dump enables administrators to create crash dump files when a system is hung and not responding to traditional debugging methods.

An analysis of the crash dump log is an essential part of diagnosing reliability problems, such as hanging operating systems, device drivers, and applications. Many crashes freeze a system, and the only available action for administrators is to cycle the system power. Resetting the system erases any information that could support problem analysis, but the NMI feature preserves that information by performing a memory dump before a hard reset.

To force the OS to initiate the NMI handler and generate a crash dump log, the administrator can use the iLO Generate NMI feature.

Troubleshooting resources

Troubleshooting resources are available for HPE Gen10 and Gen10 Plus server products in the following documents:

- Troubleshooting Guide for HPE ProLiant Gen10 and Gen10 Plus servers provides procedures for resolving common problems and comprehensive courses of action for fault isolation and identification, issue resolution, and software maintenance.
- Error Message Guide for HPE ProLiant Gen10 Plus servers and HPE Synergy provides a list of error messages and information to assist with interpreting and resolving error messages.
- Integrated Management Log Messages and Troubleshooting Guide for HPE ProLiant Gen10 and Gen10 Plus servers and HPE Synergy provides IML messages and associated troubleshooting information to resolve critical and cautionary IML events.

To access troubleshooting resources for your product, see the **Hewlett Packard Enterprise website**.

Configuration and diagnostic utilities

This chapter provides information about common utilities that might not apply to your server. For information about server compatibility with the utilities listed in this chapter, see the product QuickSpecs at the Hewlett Packard Enterprise website (**https://www.hpe.com/info/qs**).

NOTE

Servers ordered from HPE Factory Express might have already been configured with all or some of the steps provided in this chapter. Refer to your order from HPE Factory Express to determine if any additional steps are required for setup.

Installing an operating system

To install an operating system on a server, first use iLO Virtual Media to connect the OS installation media to the server. Information about iLO Virtual Media is in the iLO User Guide at **www.hpe.com/support/ilo-docs**. Then, use the Intelligent Provisioning Setup Wizard (**www.hpe.com/info/intelligentprovisioning/docs**) to install the operating system.

For a list of supported operating systems, see the HPE Servers Support & Certification Matrices at **www.hpe.com/support/Servers-Certification-Matrices**.

Configuring the initial setup of a server

To configure	Use
Single server (graphical user interface)	• **Guided process:** Intelligent Provisioning (**www.hpe.com/info/intelligentprovisioning/docs**) • **Manual process:** HPE iLO web interface accessed by iLO remote console. Refer to the iLO online help for more information about iLO remote console. • **Menu-based process:** UEFI System Utilities (**https://www.hpe.com/info/UEFI-manual**)
Single server (scripting)	• **Using CLI for Windows and Linux to configure Redfish settings on a Gen10 or later server:** RESTful Interface Tool (**www.hpe.com/support/restfulinterface/docs**) • **Using Python:** Python iLO Redfish Library (python-ilorest-library) (**github.com/HewlettPackard/python-ilorest-library**) • **Using PowerShell for Windows-based environments:** PowerShell cmdlets (**https://www.hpe.com/info/powershell/docs**) • **Directly to the API using cURL or any other programming interface:** iLO RESTful API (**https://hewlettpackard.github.io/ilo-rest-api-docs/**)
Multiple servers (either UI or scripting)	HPE OneView (**https://www.hpe.com/support/oneview-docs**) [1]

[1] For servers running HPE OneView, do not use another tool, such as iLO, to delete or change certain settings. For more information about using HPE OneView and iLO to manage the same server, see the iLO User Guide at **www.hpe.com/support/ilo-docs**.

Configuring storage controllers

To determine the storage controllers that are supported by your server, see the product QuickSpecs at the Hewlett Packard Enterprise website (**https://www.hpe.com/info/qs**).

Controller type	Documentation
SR hardware RAID	—
Gen10 Plus	HPE SR Gen10 Plus Controller User Guide at https://www.hpe.com/info/SR-Gen10Plus-UG
Gen10	HPE Smart Array SR Controller Gen10 User Guide at https://www.hpe.com/support/SSC-SRGen10-ug
MR hardware RAID	—
Gen10 Plus	HPE MR Gen10 Plus Controller User Guide at https://www.hpe.com/info/MR-Gen10Plus-UG
Gen10	HPE Smart Array P824i-p MR Gen10 User Guide at https://www.hpe.com/info/p824ip-mr-gen10-contr-UG
Software RAID	• HPE SR Gen10 Plus Software RAID User Guide at https://www.hpe.com/support/SSC-SRGen10Plus-ug • User guides for the Intel Virtual RAID on CPU for HPE Gen10 Plus at https://www.hpe.com/support/IntelVROC-Gen10Plus-docs

Configuring NVMe OS boot devices

NVMe OS boot devices are plug and play as of Gen10. Device installation instructions are included in the packaging, server user guides, or server maintenance and service guides.

Configuring network controllers

To determine the network controllers that are supported by your server, see the product QuickSpecs at the Hewlett Packard Enterprise website (https://www.hpe.com/info/qs).

Network controllers are plug and play. For installation instructions, see the server user guide, the documentation included with the controller, or on the Hewlett Packard Enterprise Support Center website (https://www.hpe.com/support/hpesc) see:

Controller	Type	Documentation
OPC NIC 3.0	Network adapter	HPE OCP NIC 3.0 Adapter Installation Instructions at www.hpe.com/support/OCP3-NIC-Installation
PCIe	Network adapter	HPE PCIe Network Adapter Installation Instructions at www.hpe.com/support/PCIe-Installation
Synergy Type C and D	Mezzanine adapter	HPE Synergy Type C and Type D Mezzanine Adapters Installation Instructions at https://www.hpe.com/support/Synergy-Mezz-Installation
FlexibleLOM for Blades	Mezzanine card	HPE FlexibleLOM for Blades Installation Instructions at https://www.hpe.com/support/BLOM-Installation
FlexibleLOM for Racks	Network adapter	HPE FlexibleLOM for Racks Installation Instructions at https://www.hpe.com/support/ALOM-Installation
BladeSystem Type A and B	Mezzanine card	HPE BladeSystem Type A and B Mezzanine Card Installation Instructions at https://www.hpe.com/support/Blade-Mezz-Installation

Monitoring servers

To monitor	Use	Supported notifications
Single server	HPE iLO (www.hpe.com/support/ilo-docs)	• **SNMP** • **Redfish events** • **Email alerts** • **syslog**
Multiple servers	HPE OneView (www.hpe.com/support/oneview-docs)	• **SNMP** • **Redfish change events for Gen10 or later servers:** An example of a change event is adding a disk to a server. • **Email alerts**: HPE OneView provides email notifications based on alerts triggered from HPE iLO and other resources. • **syslogs from iLO**: HPE OneView can configure the iLO servers to forward their syslogs. HPE Oneview does not monitor the content of the forwarded syslogs.

Updating the server

- **HPE ProLiant servers:** HPE provides a comprehensive system software and firmware update solution through Service Packs for ProLiant (SPP).
- **HPE Synergy:** HPE provides updated firmware and software images through HPE Synergy Service Packs (SSPs).

To	Use
View supported operating systems and access operating system updates.	HPE Servers Support & Certification Matrices at www.hpe.com/support/Servers-Certification-Matrices
Determine and deploy which SSPs or SPPs to a single server.	Smart Update Manager (SUM) (www.hpe.com/info/sum-docs)
Deploy SSPs and SPPs to multiple servers.	HPE OneView (www.hpe.com/support/oneview-docs)
Download the SSP.	HPE Synergy management combinations and HPE Synergy Service Packs (SSPs) (www.hpe.com/info/synergy-sw-release-information)
Download the SPP.	HPE Service Pack for ProLiant (SPP) (www.hpe.com/servers/spp)

Optimizing the server

To	Use
Optimize server performance through management and tuning features.	HPE Server Performance Management and Tuning Guide at www.hpe.com/info/server-performance-management-tuning-en
Obtain recommendations for resolving incorrect settings.	HPE InfoSight for Servers (www.hpe.com/info/infosight-servers-docs)

Configuring security

To	See
Implement server security best practices.	• HPE Gen10 and Gen10 Plus Security Reference Guide at www.hpe.com/info/server-security-reference-en • HPE iLO 5 Security Technology Brief at www.hpe.com/support/ilo5-security-en
Configure and use the Server Configuration Lock feature on HPE Trusted Supply Chain servers and other servers that have the Server Configuration Lock feature enabled.	Server Configuration Lock User Guide for HPE ProLiant Gen10 and Gen10 Plus servers and HPE Synergy at www.hpe.com/info/server-config-lock-UG-en

Managing Linux-based high performance compute clusters

To	Use
Provision, manage, and monitor clusters.	HPE Performance Cluster Manager (www.hpe.com/support/hpcm_manuals)
Optimize your applications.	HPE Performance Analysis Tools (www.hpe.com/info/perftools)
Optimize software library for low latency and high bandwidth, both on-node and off-node, for point-to-point and collective communications.	HPE Cray Message Passing Toolkit in the HPE Cray Programming Environment User Guide for your server OS at www.hpe.com/info/cray-pe-user-guides
Optimize software libraries, runtime tools, and a scalable development environment for tuning and accelerating compute-intensive applications.	HPE Message Passing Interface (www.hpe.com/support/mpi-ug-038)

Component identification

This chapter describes the external and internal server features and components.

Subtopics

Front panel components
Front panel LEDs and buttons
Rear panel components
Rear panel LEDs
System board components
Drive box numbering
Drive bay numbering
HPE Basic Drive LED definitions
DSC-25 2-port SFP28 card ports and LEDs
HPE NS204i-p NVMe OS Boot Device components
HPE NS204i-p NVMe OS Boot Device LED definitions
Fan bay numbering

Front panel components

SFF front panel components

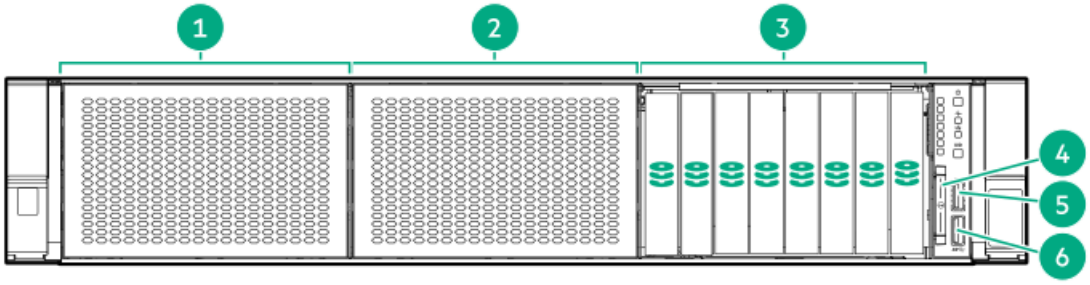

Item	Description
1	Box 1
2	Box 2
3	Box 3
4	Serial number/iLO information pull tab [1]
5	iLO service port
6	USB 3.0 port

[1] The serial number/iLO information pull tab is double-sided. One side shows the server serial number and the customer asset tag label. The other side shows the default iLO account information.

LFF front panel components



Item	Description
1	Box 1
2	Box 2
3	Box 3

Subtopics

iLO Service Port

iLO Service Port

The Service Port is a USB port with the label **iLO** on supported servers and compute modules.

To find out if your server or compute module supports this feature, see the server specifications document at the following website: https://www.hpe.com/info/qs.

When you have physical access to a server, you can use the Service Port to do the following:

- Download the Active Health System Log to a supported USB flash drive.

  When you use this feature, the connected USB flash drive is not accessible by the host operating system.

- Connect a client (such as a laptop) with a supported USB to Ethernet adapter to access the following:

- iLO web interface
- Remote console
- iLO RESTful API
- CLI

Hewlett Packard Enterprise recommends the HPE USB to Ethernet Adapter (part number Q7Y55A).

When you use the iLO Service Port:

- Actions are logged in the iLO event log.
- The server UID flashes to indicate the Service Port status.

  You can also retrieve the Service Port status by using a REST client and the iLO RESTful API.
- You cannot use the Service Port to boot any device within the server, or the server itself.
- You cannot access the server by connecting to the Service Port.
- You cannot access the connected device from the server.

For more information about the iLO Service Port, see the iLO user guide at the following website: **https://www.hpe.com/support/ilo-docs**.

Front panel LEDs and buttons

SFF front panel LEDs and buttons

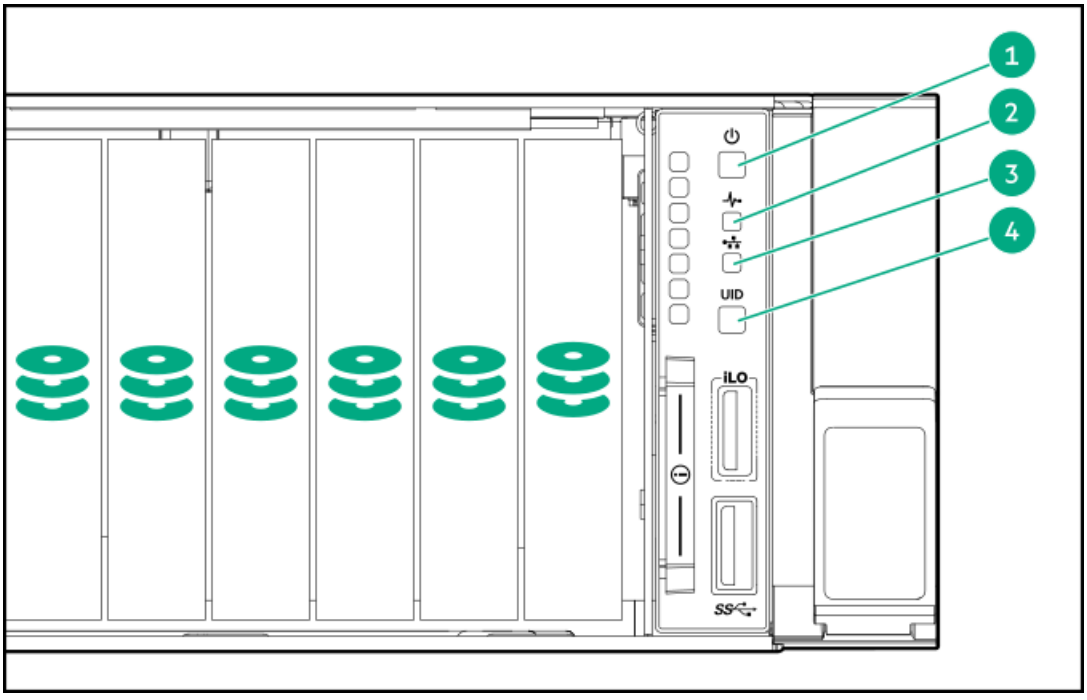

LFF front panel LEDs and buttons

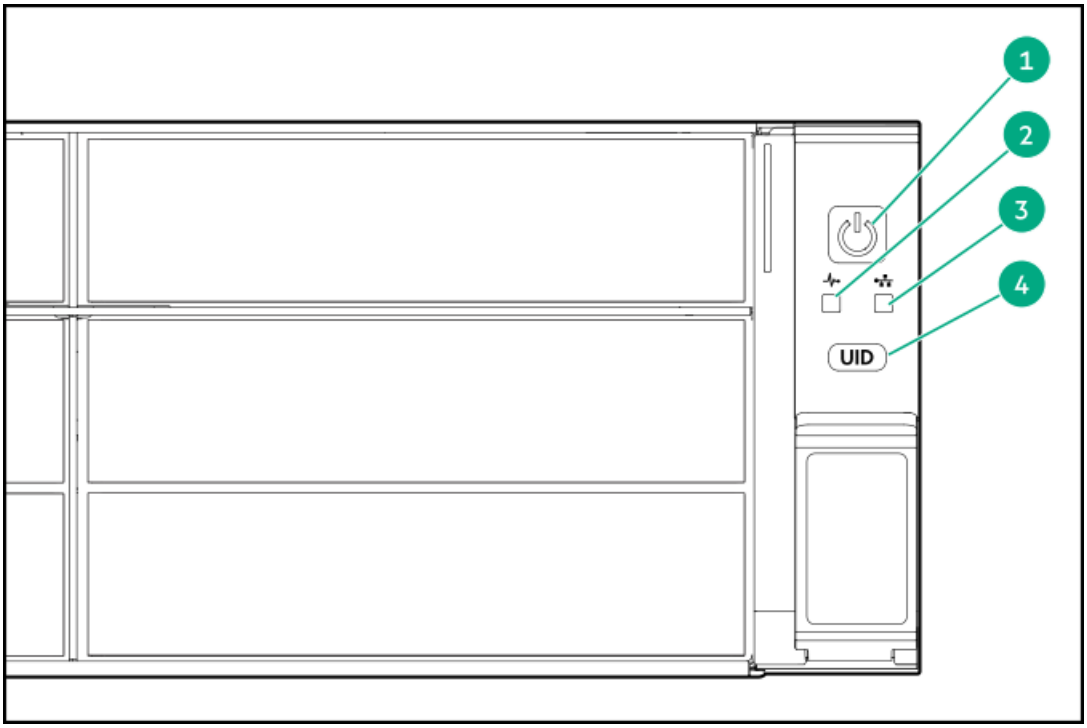

Item	Description	Status	Definition
1	Power On/Standby button and system power LED [1]	Solid green	System on
		Flashing green	Performing power-on sequence
		Solid amber	System in standby
		Off	No power present [2]
2	Health LED [1]	Solid green	Normal
		Flashing green	iLO is rebooting
		Flashing amber	System degraded [3]
		Flashing red	System critical [3]
3	NIC status LED [1]	Solid green	Linked to network
		Flashing green	Network active
		Off	No network activity
4	UID button/LED [1]	Solid blue	Activated
		Flashing blue	• 1 flash per second = Remote management or firmware upgrade in progress • 4 flashes per second = iLO manual reboot sequence initiated • 8 flashes per second = iLO manual reboot sequence in progress
		Off	Deactivated

1 When all four LEDs described in this table flash simultaneously, a power fault has occurred. For more information, see Front panel LED

power fault codes.

2 Facility power is not present, power cord is not attached, no power supplies are installed, power supply failure has occurred, or the front I/O cable is disconnected.

3 If the health LED indicates a degraded or critical state, review the system Integrated Management Log (IML) or use HPE iLO to review the system health status.

Subtopics

Server UID LED

Using the UID button to view the Server Health Summary

Front panel LED power fault codes

Server UID LED

The UID LED is used to locate a particular server when it is deployed in a dense enclosure with other equipment. Activating the UID LED helps an on-site technician to quickly identify a server for maintenance tasks.

Using the UID button to view the Server Health Summary

Prerequisites

- An external monitor is connected.
- In the iLO web interface, the Show Server Health on External Monitor feature is enabled on the Access Settings page.

About this task

You can use the UID button to display the iLO Server Health Summary screen on an external monitor. This function works both when the server is powered on or off. Use this feature for troubleshooting if the server will not start up.

CAUTION

Press and release the UID button. Holding it down at any time for more than five seconds initiates a graceful iLO reboot or a hardware iLO reboot. Data loss or NVRAM corruption might occur during a hardware iLO reboot.

Procedure

1. Press and release the UID button.

   The Server Health Summary screen is displayed on the external monitor. For more information, see the iLO troubleshooting guide on the Hewlett Packard Enterprise website (**https://www.hpe.com/support/ilo-docs**).

2. Press the UID button again to close the Server Health Summary screen.

Front panel LED power fault codes

The following table provides a list of power fault codes, and the subsystems that are affected. Not all power faults are used by all servers.

Subsystem	LED behavior
System board	1 flash
Processor	2 flashes
Memory	3 flashes
Riser board PCIe slots	4 flashes
FlexibleLOM	5 flashes
Storage controller	6 flashes
System board PCIe slots	7 flashes
Power backplane	8 flashes
Storage backplane	9 flashes
Power supply	10 flashes
PCIe expansion cards installed in riser board	11 flashes
Chassis	12 flashes
GPU card	13 flashes

Rear panel components

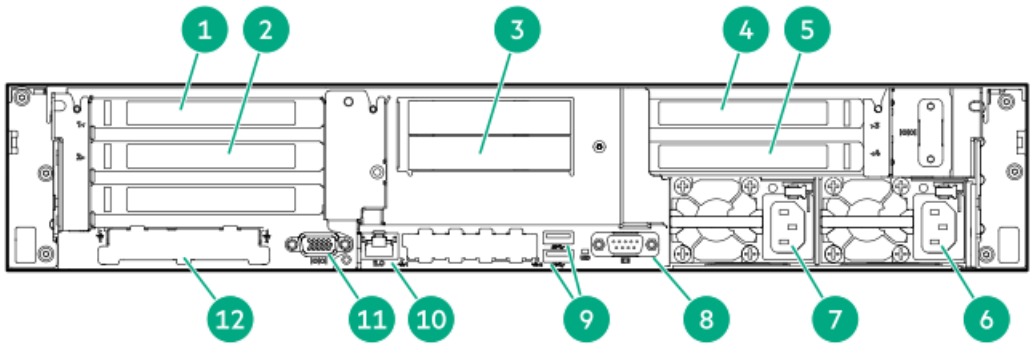

Item	Description
1	Slot 1 PCIe4 x16 (16, 8, 4, 1)
2	Slot 2 PCIe4 x16 (16, 8, 4, 1)
3	Box 4
4	Slot 3 PCIe4 x8 (8, 4, 1) or PCIe4 x16 (16, 8, 4, 1) [1]
5	Slot 4 PCIe4 x8 (8, 4, 1)
6	Flex Slot power supply 1
7	Flex Slot power supply 2 (optional)
8	Serial port (optional)
9	USB 3.0 ports
10	iLO Management port
11	Video port
12	OCP NIC 3.0 slot [2]

1 The slot 3 specifications depends on the secondary riser option installed.

2 This slot supports a SFF OCP NIC 3.0 adapter.

Rear panel LEDs

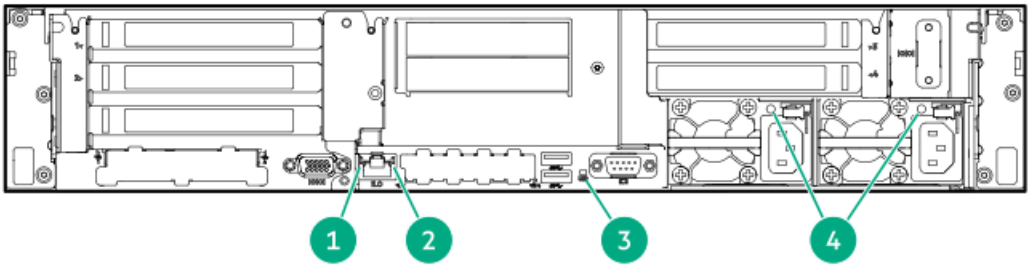

Item	LED	Status	Definition
1	iLO link	Solid green	Network link
		Off	No network link
2	iLO status	Solid green	Linked to network
		Flashing green	Network active
		Off	No network activity
3	UID	Solid blue	Activated
		Flashing blue	• 1 flash per sec = Remote management or firmware upgrade in progress • 4 flashes per sec = iLO manual reboot sequence initiated • 8 flashes per sec = iLO manual reboot sequence in progress
		Off	Deactivated
4	Power supply	Solid green	The power supply is operating normally
		Off	One or more of the following conditions exists: • Power is unavailable • Power supply failure • Power supply is in standby mode • Power supply error

System board components

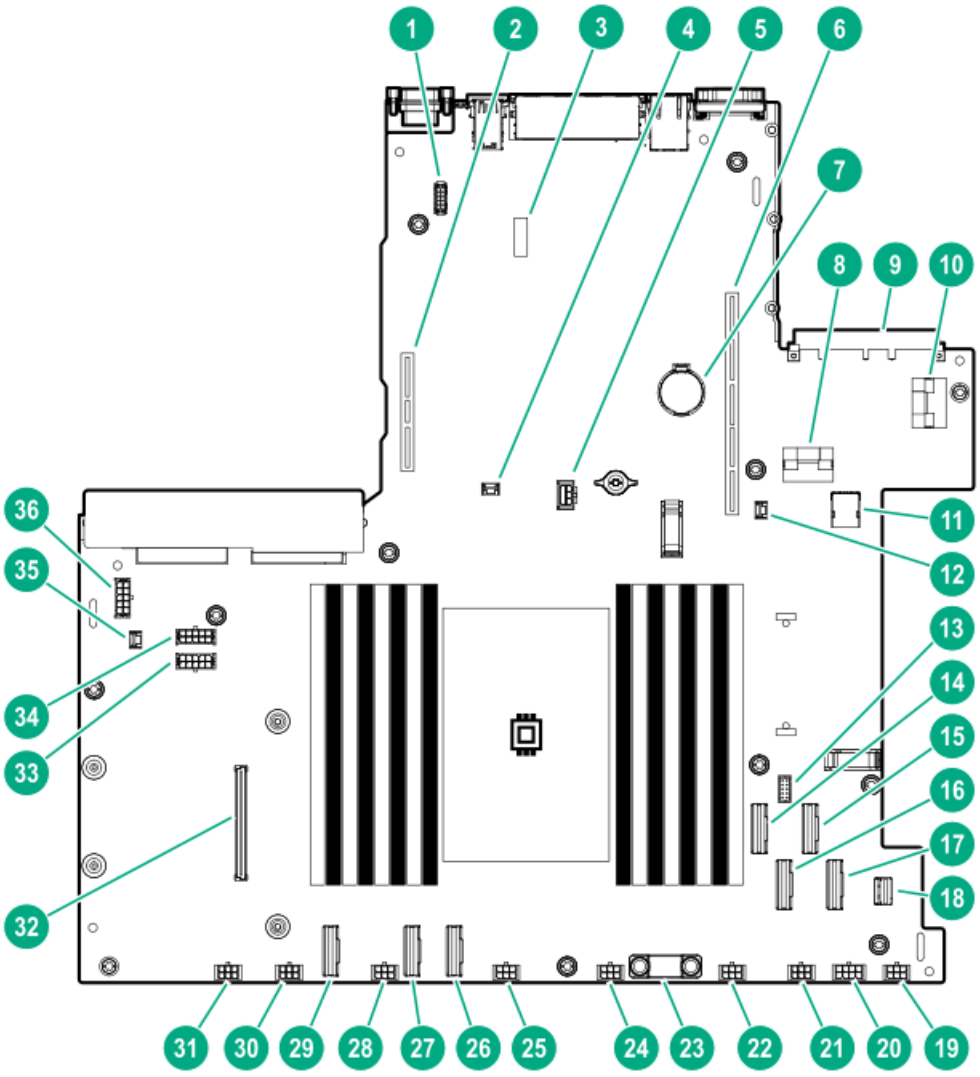
1
2
3
4
5
6
7
8
9
10
11
12
13
14
15
16
17
18
19
20
21
22
23
24
25
26
27
28
29
30
31
32
33
34
35
36

Item	Description
1	Serial port connector
2	Secondary PCIe4 riser connector
3	System maintenance switch
4	Storage controller backup power connector 2
5	Graphics card power connector 2
6	Primary PCIe4 riser connector
7	System battery
8	NVMe port 6A
9	OCP NIC 3.0 slot
10	OCP NIC 3.0 x16 upgrade connector
11	Internal USB 3.0 port
12	Storage controller backup power connector 1
13	Energy pack connector
14	NVMe/SATA port 9A
15	NVMe port 4A
16	NVMe/SATA port 8A
17	NVMe port 5A
18	Front I/O connector
19	Fan connector 6
20	Graphics card power connector 1
21	Fan connector 5
22	Not for use in this server
23	TPM connector
24	Fan connector 4
25	Fan connector 3
26	NVMe port 3A
27	NVMe port 1A
28	Fan connector 2
29	NVMe port 2A
30	Not for use in this server
31	Fan connector 1
32	Type-a modular storage controller slot
33	Drive backplane power connector 3
34	Drive backplane power connector 2
35	Chassis intrusion detection switch connector
36	Drive backplane power connector 1

Subtopics

- System maintenance switch descriptions
- DIMM slot locations
- DIMM label identification
- Processor and socket components

System maintenance switch descriptions

Position	Default	Function
S1 [1]	Off	• Off = iLO 5 security is enabled. • On = iLO 5 security is disabled.
S2	Off	Reserved
S3	Off	Reserved
S4	Off	Reserved
S5 [1]	Off	• Off = Power-on password is enabled. • On = Power-on password is disabled.
S6 [1], [2], [3]	Off	• Off = No function • On = Restore default manufacturing settings
S7	Off	Reserved
S8	—	Reserved
S9	—	Reserved
S10	—	Reserved
S11	—	Reserved
S12	—	Reserved

[1] To access the redundant ROM, set S1, S5, and S6 to On.

[2] When the system maintenance switch position 6 is set to the On position, the system is prepared to restore all configuration settings to their manufacturing defaults.

[3] When the system maintenance switch position 6 is set to the On position and Secure Boot is enabled, some configurations cannot be restored. For more information, see Configuring security.

DIMM slot locations

DIMM slots are numbered sequentially (1 through 16). The supported Advance Memory Protection (AMP) modes use the letter assignments for population guidelines.

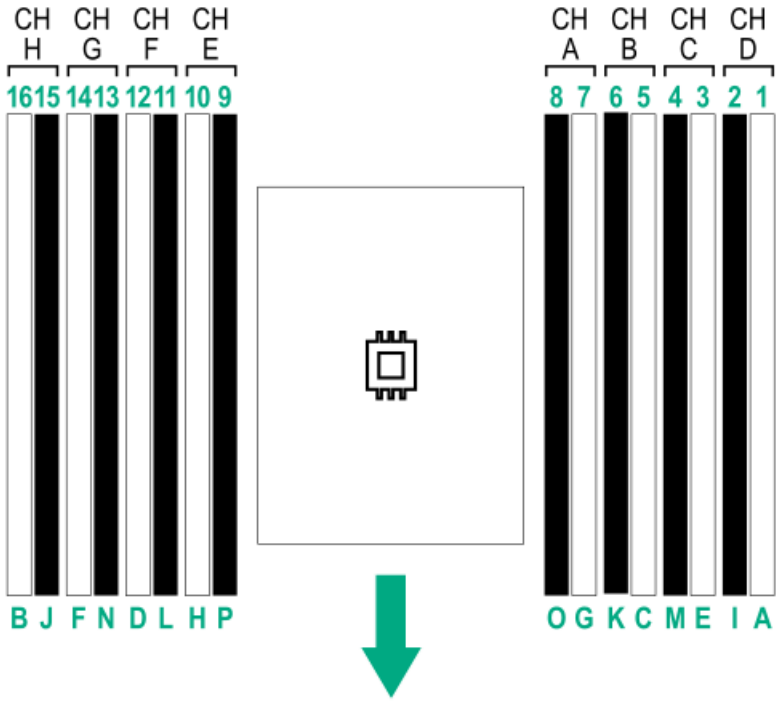

The arrow points to the front of the server.

DIMM label identification

To determine DIMM characteristics, see the label attached to the DIMM. The information in this section helps you to use the label to locate specific information about the DIMM.

For more information about product features, specifications, options, configurations, and compatibility, see the HPE DDR4 SmartMemory QuickSpecs on the Hewlett Packard Enterprise website (**https://www.hpe.com/support/DDR4SmartMemoryQS**).

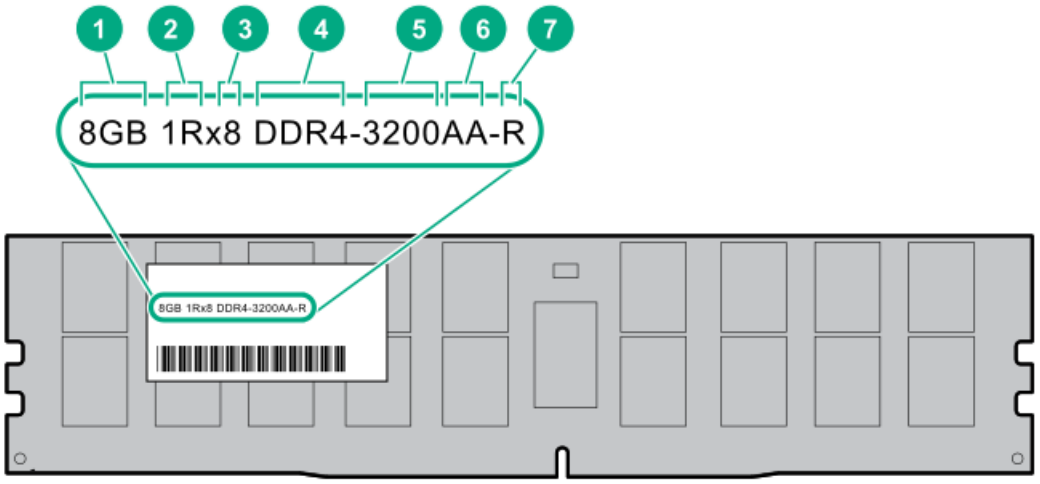

Item	Description	Example
1	Capacity	8 GB
		16 GB
		32 GB
		64 GB
		128 GB
		256 GB
2	Rank	1R = Single rank
		2R = Dual rank
		4R = Quad rank
		8R = Octal rank
3	Data width on DRAM	x4 = 4-bit
		x8 = 8-bit
4	Memory generation	PC4 = DDR4
5	Maximum memory speed	3200 MT/s
6	CAS latency	AA = CAS 22-22-22
		AA = CAS 26-22-22 (for 3DS LRDIMM)
7	DIMM type	E = Unbuffered ECC (UDIMM)
		R = RDIMM (registered)
		L = LRDIMM (load reduced)

Processor and socket components

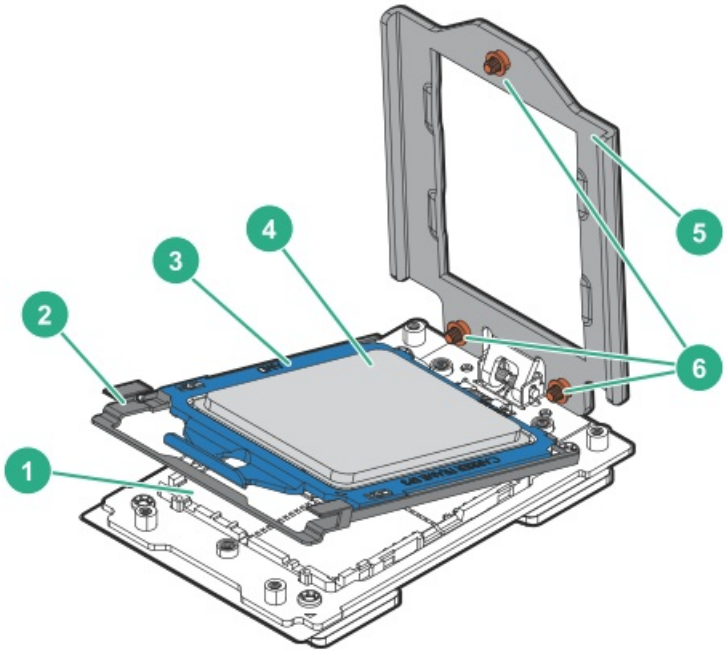

Item	Description
1	Pin field
2	Rail frame
3	Carrier frame
4	Processor
5	Force frame
6	Captive screws (Torx T-20)

Drive box numbering

Front SFF drive box numbering (SAS/SATA/NVMe)

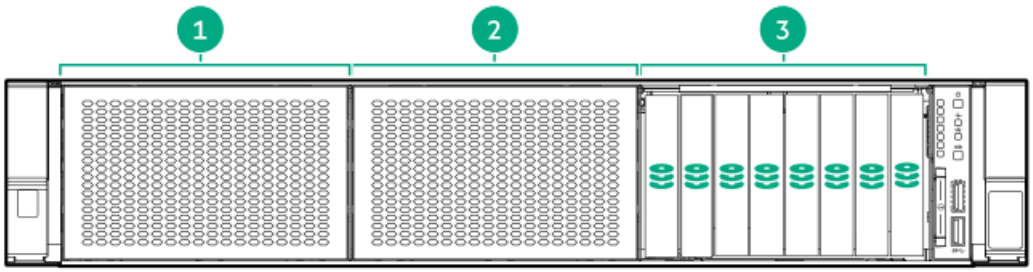

Item	Description
1	Box 1
2	Box 2
3	Box 3

Front LFF drive box numbering (SAS/SATA)



Item	Description
1	Box 1
2	Box 2
3	Box 3

Rear SFF drive box 4 (SAS/SATA/NVMe)

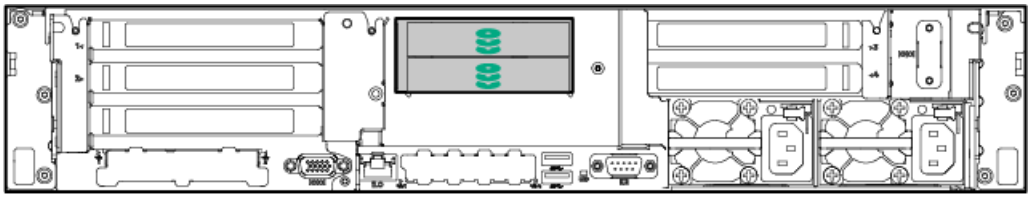

Drive bay numbering

The drive bay numbering depends on where the drive backplanes are connected:

- To a storage controller:
  - Embedded HPE SR100i Gen10 Plus Software RAID controller using the onboard SATA/NVMe ports
  - Type-a and type-p storage controller ports
- To a SAS expander (installed in the primary riser)

Subtopics

Drive bay numbering: Storage controller
Drive bay numbering: SAS expander

Drive bay numbering: Storage controller

When the drive backplane is connected directly to a storage controller, the drive numbering in each drive box starts at 1.

Front SFF drive numbering

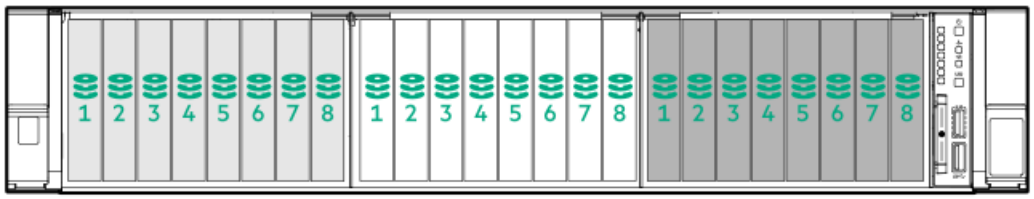

Front LFF drive numbering

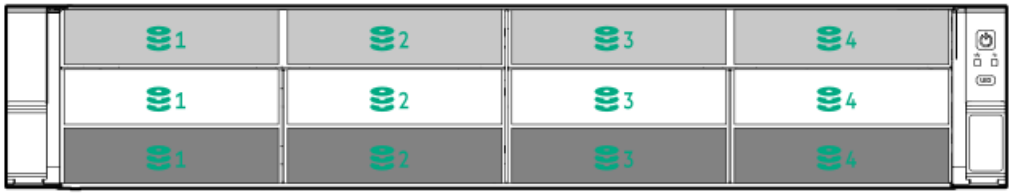

Rear SFF drive numbering

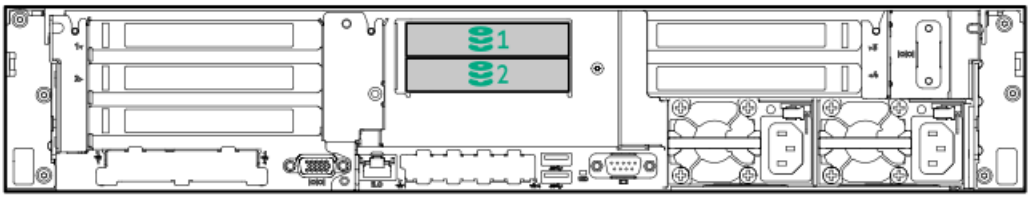

Drive bay numbering: SAS expander

When the drive backplane is connected to the SAS expander, the drive numbering is continuous across all the drive boxes.

- SAS expander port 1 always connects to the controller port 1.
- SAS expander port 2 always connects to the controller port 2.
- SAS expander port 3—Drive numbers 1 to 4
- SAS expander port 4—Drive numbers 5 to 8
- SAS expander port 5—Drive numbers 9 to 12
- SAS expander port 6—Drive numbers 13 to 16
- SAS expander port 7—Drive numbers 17 to 20
- SAS expander port 8—Drive numbers 21 to 24
- SAS expander port 9—Drive numbers 25 to 27

Front SFF drive numbering

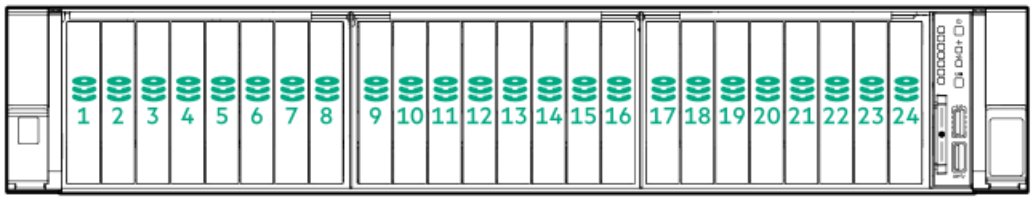

Rear SFF drive numbering

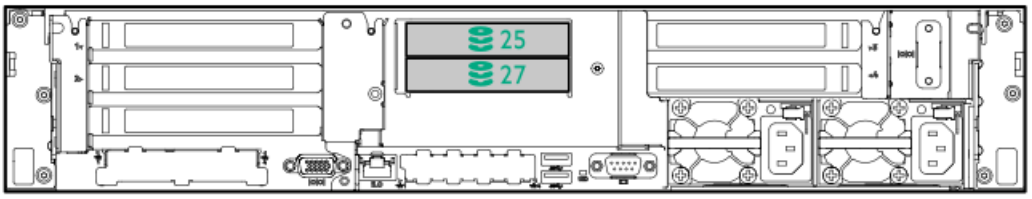

HPE Basic Drive LED definitions

LFF low-profile drive carrier

The LFF low-profile drive carrier supports hot-plug SAS and SATA drives.

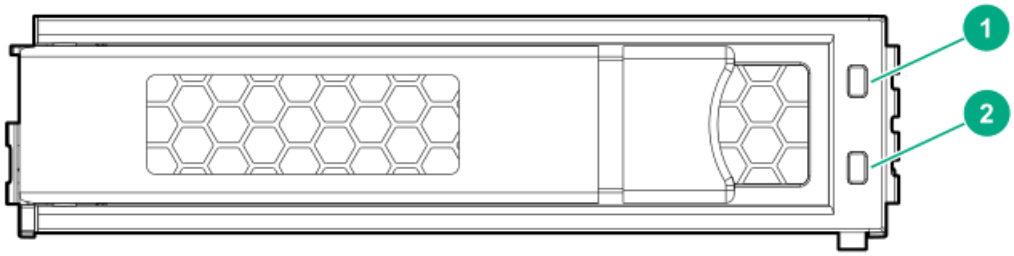

SFF basic drive carrier

The SFF basic drive carrier supports hot-plug SAS, SATA, U.2 NVMe or U.3 NVMe .

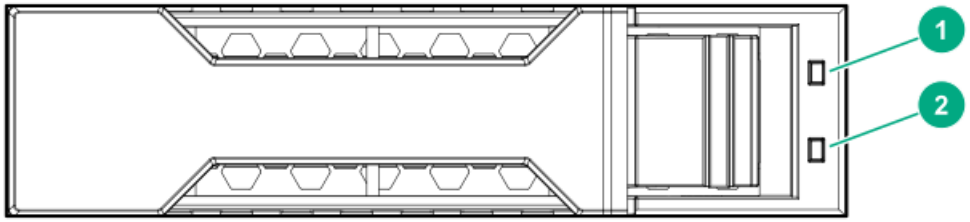

Item	LED	Status	Definition
1	Fault/Locate	Solid amber	This drive has failed, is unsupported, or is invalid.
		Solid blue	The drive is operating normally and being identified by a management application.
		Flashing amber/blue	The drive has failed, or a predictive failure alert has been received for this drive. The drive has also been identified by a management application.
		Flashing amber	A predictive failure alert has been received for this drive. Replace the drive as soon as possible.
2	Online/Activity	Solid green	The drive is online and has no activity.
		Flashing green (1 flash per second)	The drive is doing one of the following: • Rebuilding or performing a RAID • Performing a stripe size migration • Performing a capacity expansion • Performing a logical drive extension • Erasing • Spare part activation
		Flashing green (4 flashes per second)	The drive is operation normally and has activity.
		Off	The drive is not configured by a RAID controller or is a spare drive.

DSC-25 2-port SFP28 card ports and LEDs

Ports

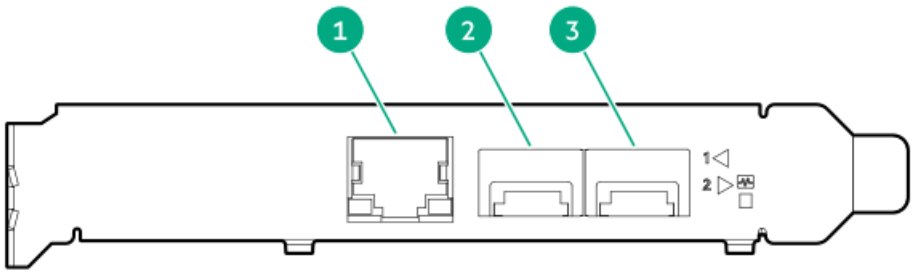

Table 1. Ports

Item	Port	Description
1	Management port	1GbE RJ45
2	Network interface port	10/25G SFP+ based
3	Network interface port	10/25G SFP+ based

LEDs

The HPE for Pensando DSP DSC-25 2p SFP28 card is a dual-port, single-slot, half-height, half-length (HHHL) SFP28 network adapter. It has LEDs for Link (L) and Activity (A) for each port. A half-height bracket is shown in the following illustration with SFP28 ports and LEDs.

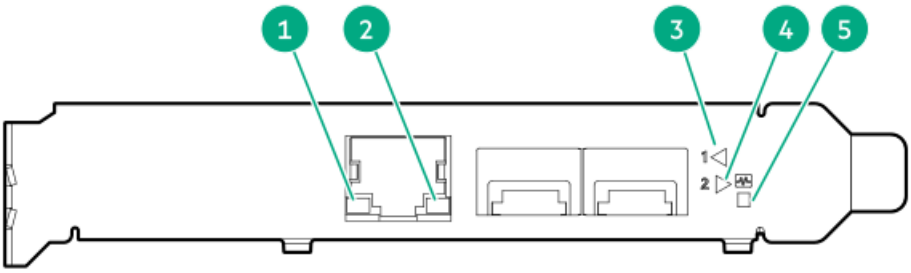

Table 2. LED indicators

Item	LED	Status	Description
1	Management Port Activity LED	Off	No activity
		Flashing	Passing traffic; flashing frequency indicates traffic intensity
2	Management Port Link LED	Off	A link has not been established
		Solid green	Valid Ethernet link
3	SFP Port 1 Link/Activity LED	Off	A link has not been established
		Solid green	Valid Ethernet link
		Flashing green	Passing traffic; flashing frequency indicates traffic intensity
		Solid amber	Link fault
4	SFP Port 2 Link/Activity LED	Off	A link has not been established
		Solid green	Valid Ethernet link
		Flashing green	Passing traffic; flashing frequency indicates traffic intensity
		Solid amber	Link fault
5	System status LED	Off	System is not powered
		Solid amber	Power is up, software has not booted yet
		Solid green	System is up and fully operational

HPE NS204i-p NVMe OS Boot Device components

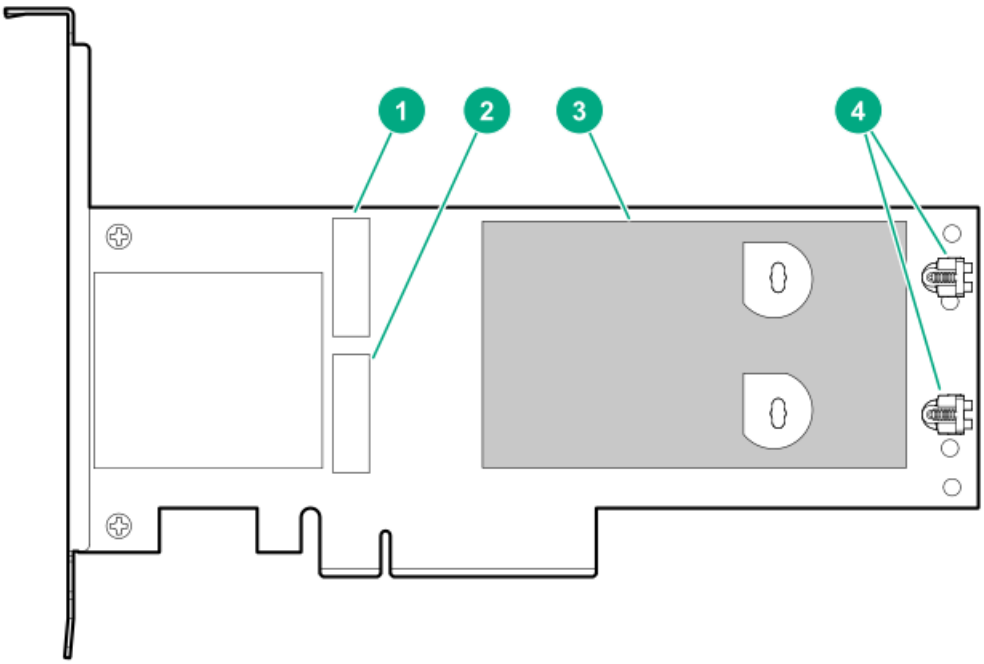

Item	Description
1	Drive bay 1
2	Drive bay 2
3	Thermal interface pad with removable liner
4	M.2 drive retaining latches

HPE NS204i-p NVMe OS Boot Device LED definitions

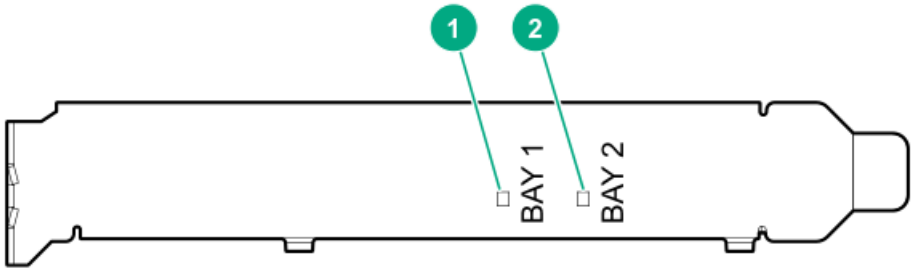

Item	Description	Fault LED status
1	Bay 1 LED	Off: Normal
2	Bay 2 LED	Flashing 1Hz: Drive predictive failure Amber: Drive failure

Fan bay numbering

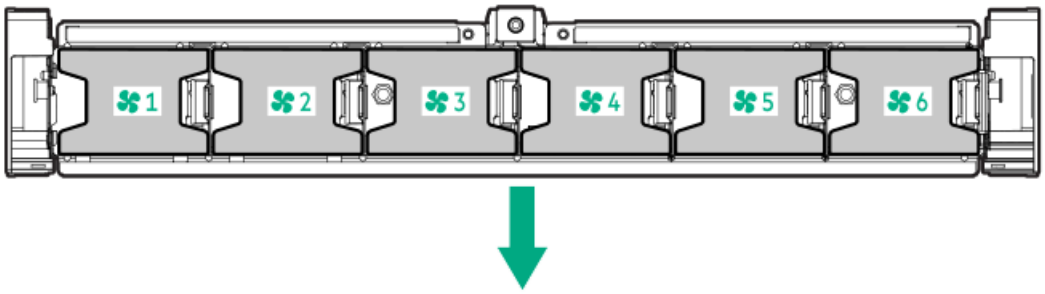

The arrow points to the front of the server.

Cabling

This chapter includes cabling guidelines and diagrams for internal component cabling.

Subtopics

Cabling guidelines
Storage cabling
M.2 SATA SSD cabling
Accelerator or GPU power cabling
Fan cabling
OCP bandwidth upgrade cabling
Serial port cabling
Chassis intrusion detection switch cabling
Front I/O cabling

Cabling guidelines

Observe the following:

- For cable option kits, see the product QuickSpecs.
- For cable spare part numbers, see the Illustrated parts catalog in the maintenance and service guide.
- Some diagrams show alphabetical callouts such as A, B, C, etc. These callouts correspond to labels near the connectors on the cable.
- Some cables have more than one connector, such as a Y-cable, but not all connectors are used.
- The cable colors in the cabling diagrams used in this chapter are for illustration purposes only.
- Observe all guidelines when working with server cables.

Before connecting cables

- Note the port labels on the PCA components. Not all these components are used by all servers:
  - System board ports
  - Drive and power supply backplane ports
  - Expansion board ports (controllers, retimers, adapters, expanders, risers, and similar boards)
- Note the label near each cable connector. This label indicates the destination port for the cable connector.

- Some data cables are prebent. Do not unbend or manipulate the cables.
- To prevent mechanical damage or depositing oil that is present on your hands, and other contamination, do not touch the ends of the connectors.

When connecting cables

- Before connecting a cable to a port, lay the cable in place to verify the length of the cable.
- Use the internal cable management features to properly route and secure the cables.
- When routing cables, be sure that the cables are not in a position where they can be pinched or crimped.
- Avoid tight bend radii to prevent damaging the internal wires of a power cord or a server cable. Never bend power cords and server cables tight enough to cause a crease in the sheathing.
- Make sure that the excess length of cables is properly secured to avoid excess bends, interference issues, and airflow restriction.
- To prevent component damage and potential signal interference, make sure that all cables are in their appropriate routing position before installing a new component and before closing up the server after hardware installation/maintenance.

When disconnecting cables

- Grip the body of the cable connector. Do not pull on the cable itself because this action can damage the internal wires of the cable or the pins on the port.
- If a cable does not disconnect easily, check for any release latch that must be pressed to disconnect the cable.

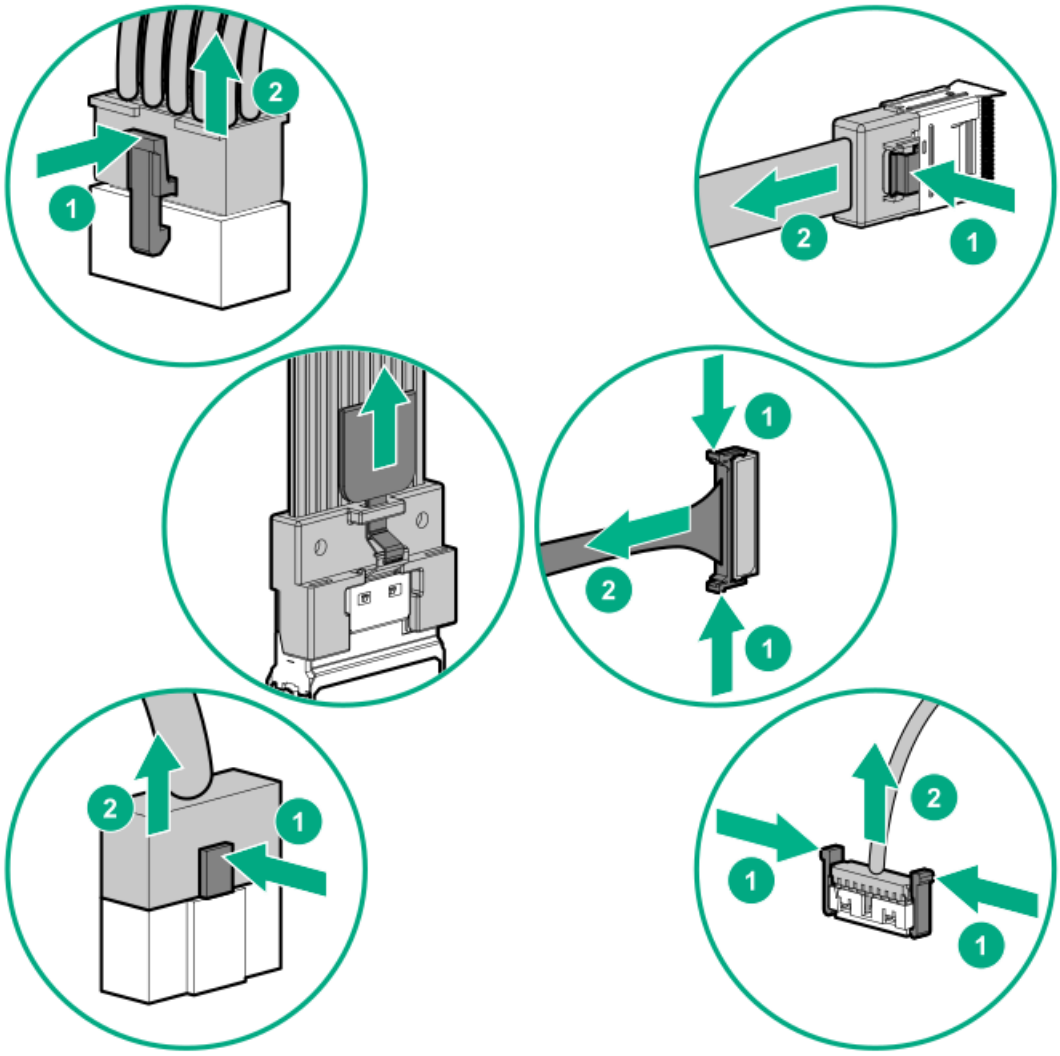

- Remove cables that are no longer being used. Retaining them inside the server can restrict airflow. If you intend to use the removed

cables later, label and store them for future use.

Storage cabling

Subtopics

Drive power cabling
Storage controller cabling
Energy pack cabling
Storage controller backup power cabling

Drive power cabling

Subtopics

12 LFF drive power cabling
24 SFF drive power cabling
2 SFF drive power cabling

12 LFF drive power cabling

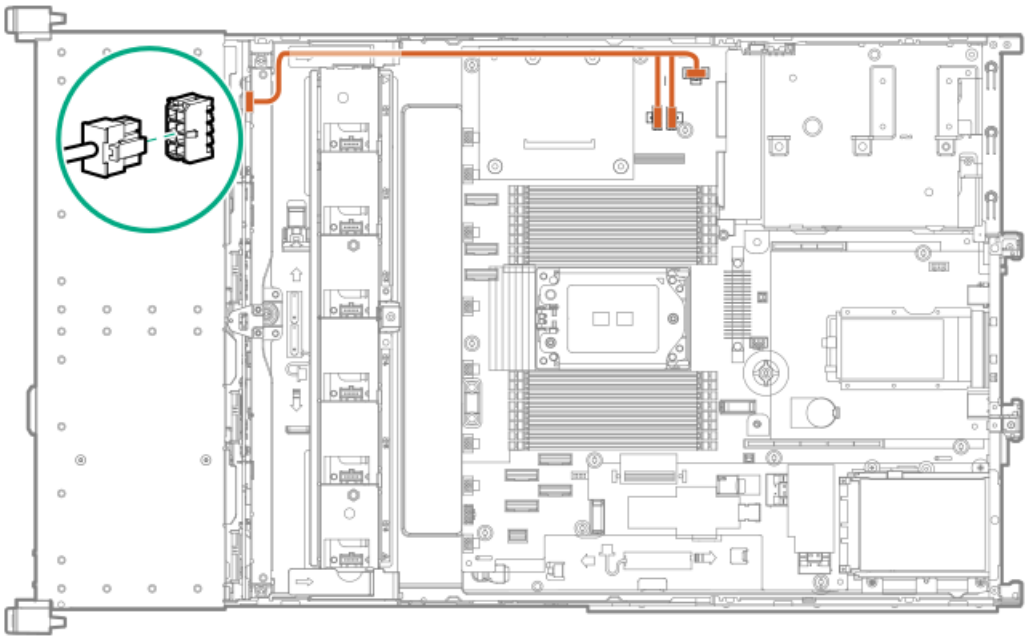

Description
4LFF BOX1 to power connector (J37)
4LFF BOX2 to power connector (J68)
4LFF BOX3 to power connector (J42)

24 SFF drive power cabling

24 SFF drive power cabling

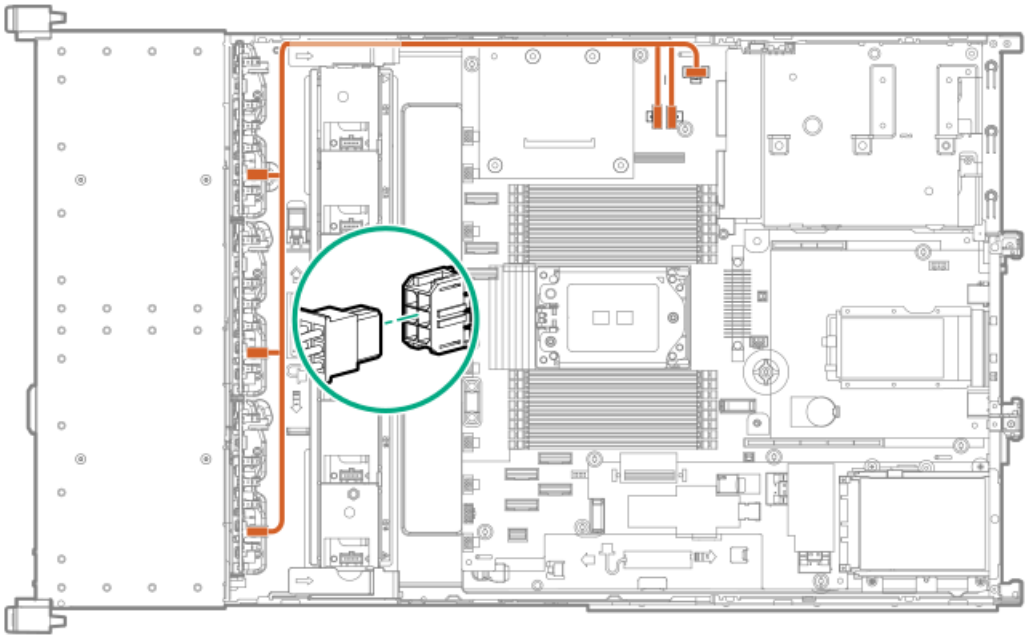

Description
8SFF BOX1 to power connector (J37)
8SFF BOX2 to power connector (J68)
8SFF BOX3 to power connector (J42)

2 SFF drive power cabling

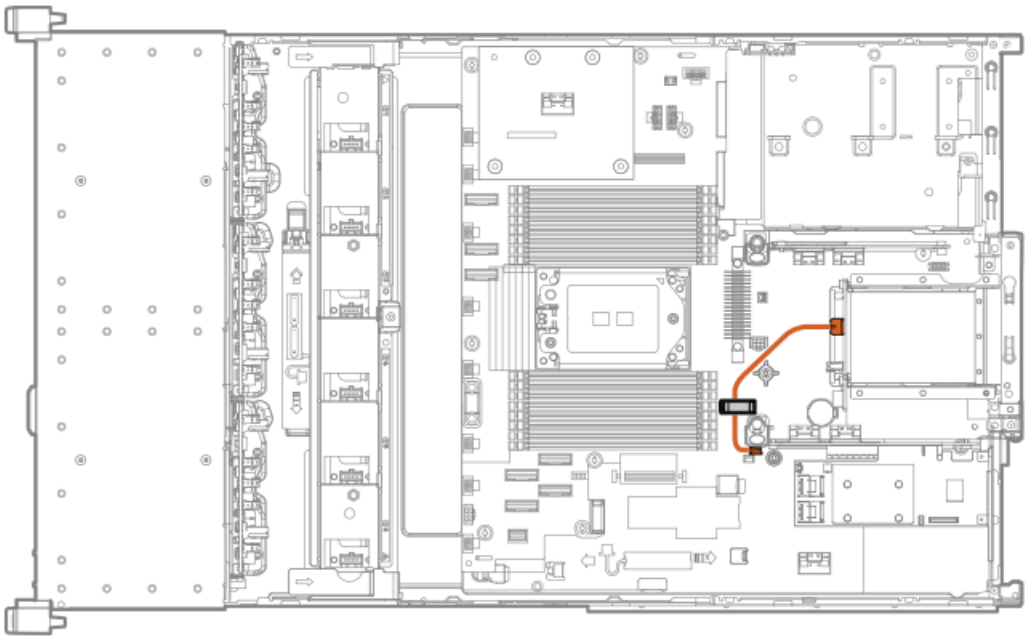

Storage controller cabling

Subtopics

8 LFF SATA Box 2 and Box 3 to system board connector (J17) cabling
8 LFF SAS/SATA Box 2 and Box 3 to type-a controller cabling
12 LFF SAS/SATA to P816-a controller cabling
12 LFF SAS/SATA + 2SFF to P816-a controller cabling
8 SFF SATA Box 3 to system board connector (J17) cabling
8 SFF SAS/SATA Box 3 to type-a controller cabling
8 SFF SAS/SATA Box 3 to PCIe controller cabling
8 SFF SAS/SATA Box 2 to type-a controller (E208i-a/E408i-a) cabling
8 SFF SAS/SATA Box 2 to type-a controller (P816i-a) cabling
8 SFF SAS/SATA Box 1 to type-a controller cabling
16 SFF SAS/SATA Box 2 and Box 3 to P816i-a controller cabling
24 SFF SAS/SATA to SAS expander cabling
8 SFF NVMe x4 Box 2 cabling
16 SFF SAS/SATA Box 1 and Box 3 to P816i-a controller cabling
16 SFF NVMe x4 Box 1 and Box 2 cabling
2 SFF SAS/SATA Box 4 to SAS expander port 9 cabling
8 SFF Basic U.3x1 to PCIe x16 or x32 tri-mode controller in primary riser cabling
8 SFF Basic U.3x1 to PCIe x16 or x32 Ttri-mode controller in secondary riser cabling
8 SFF Basic U.3x1 Box2 and Box3 to type-a tri-mode controller cabling
24 SFF NVMe x4 Premium U.2/U.3 cabling
8 SFF NVMe x4 Box 3 Premium U.2/U.3 to x32 tri-mode controller in primary riser cabling
8 SFF NVMe x4 Box 2 Premium U.2/U.3 to x32 tri-mode controller in primary riser cabling
8 SFF NVMe x4 Box 1 Premium U.2/U.3 to x32 tri-mode controller in secondary riser cabling
8 SFF NVMe x2 Box 3 Premium U.2/U.3 to x16 or x32 tri-mode controller in primary riser cabling
8 SFF NVMe x2 Box 2 Premium U.2/U.3 to x16 or x32 tri-mode controller cabling
8 SFF NVMe x2 Box 1 Premium U.2/U.3 to x16 or x32 tri-mode controller in secondary riser cabling
2 SFF SAS/SATA Box 4 to system board J1 (port 9A) cabling
2 SFF SAS/SATA Box 4 to type-a controller cabling
2 SFF NVMe Box 4 to tri-mode controller cabling

8 LFF SATA Box 2 and Box 3 to system board connector (J17) cabling

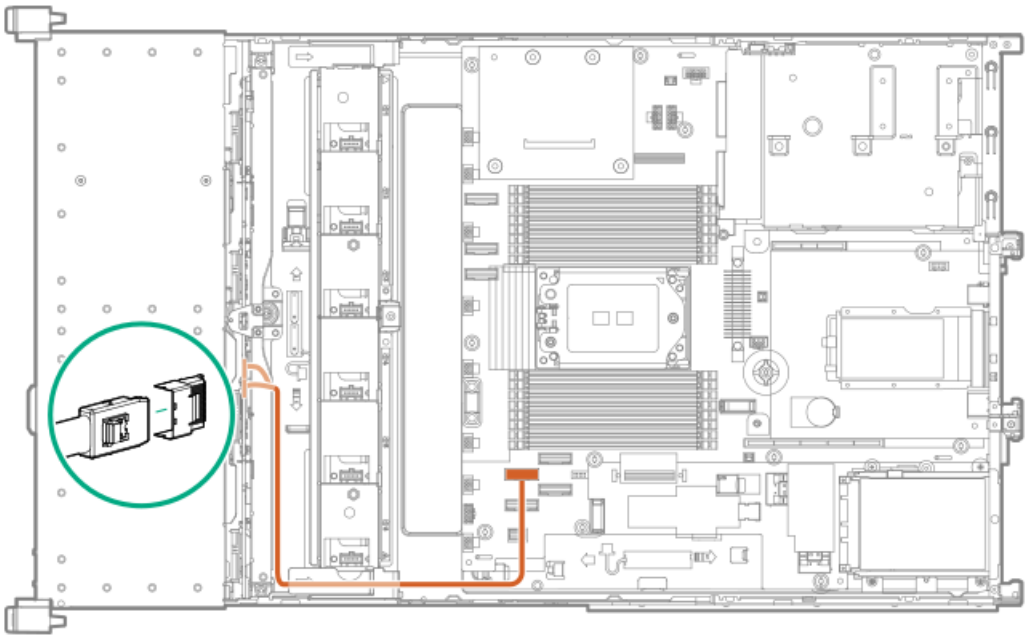

8 LFF SAS/SATA Box 2 and Box 3 to type-a controller cabling

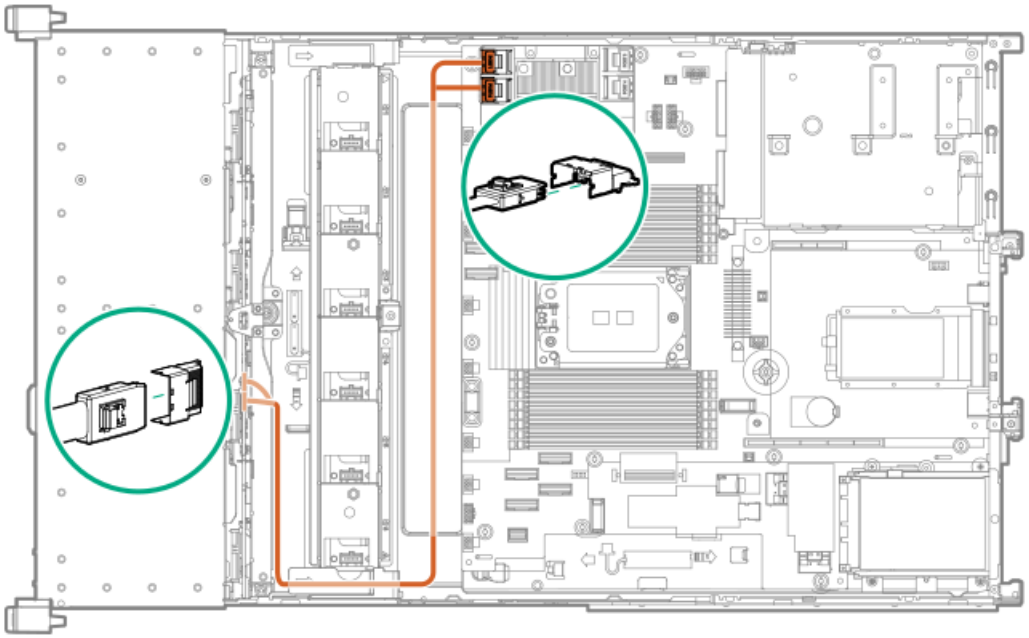

Description
Box 2 to controller port 2
Box 3 to controller port 1

12 LFF SAS/SATA to P816-a controller cabling

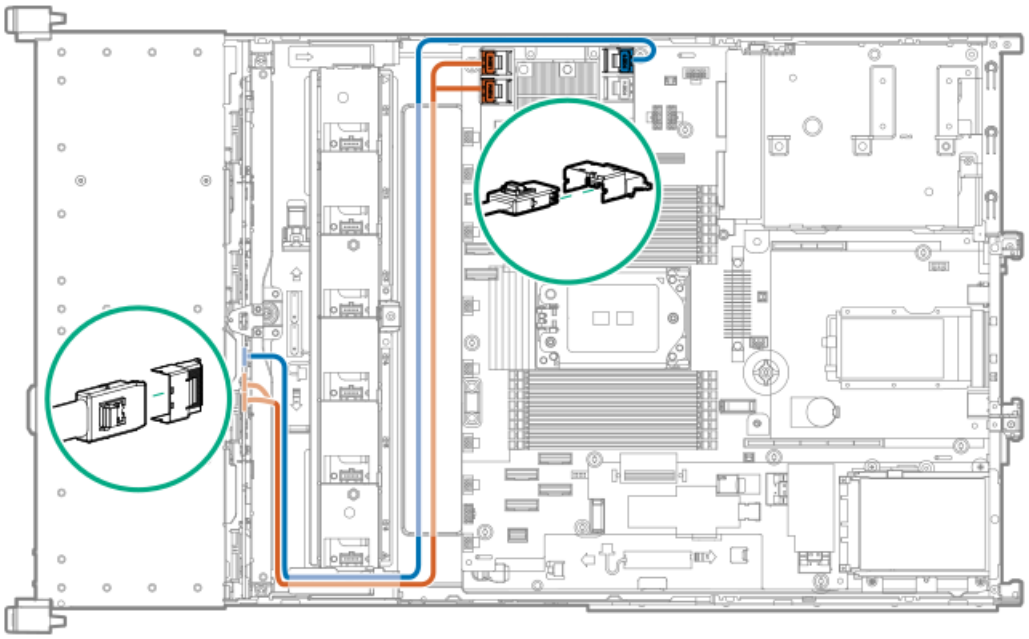

Item	Description
Orange	Box 2 to controller port 2
Orange	Box 3 to controller port 1
Blue	Box 1 to controller port 3

12 LFF SAS/SATA + 2SFF to P816-a controller cabling

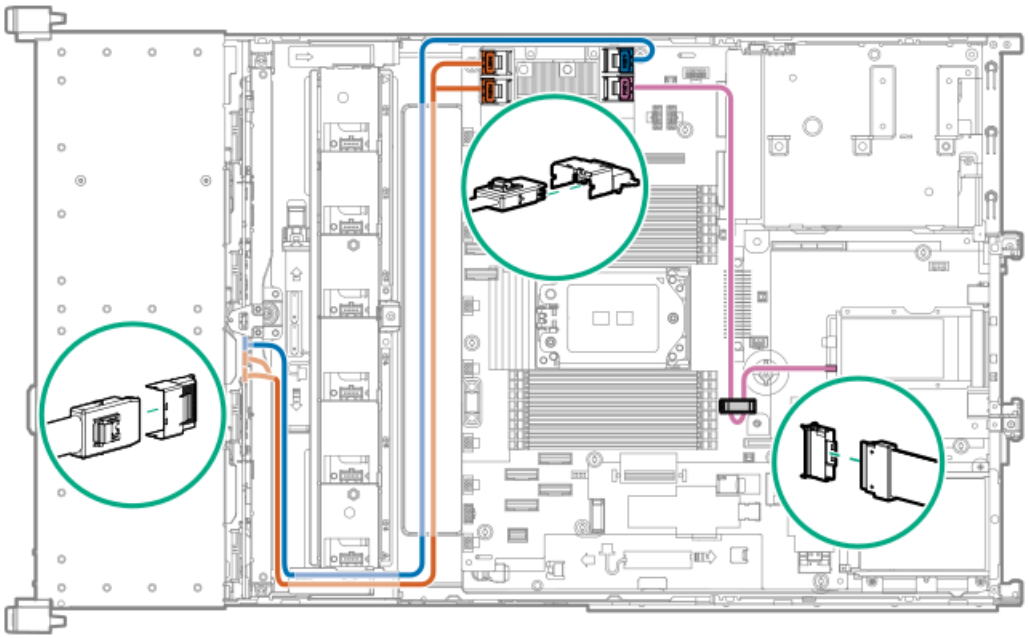

Item	Description
Orange	Box 2 to controller port 2
Orange	Box 3 to controller port 1
Blue	Box 1 to controller port 3
Pink	Box 4 to controller port 4

8 SFF SATA Box 3 to system board connector (J17) cabling

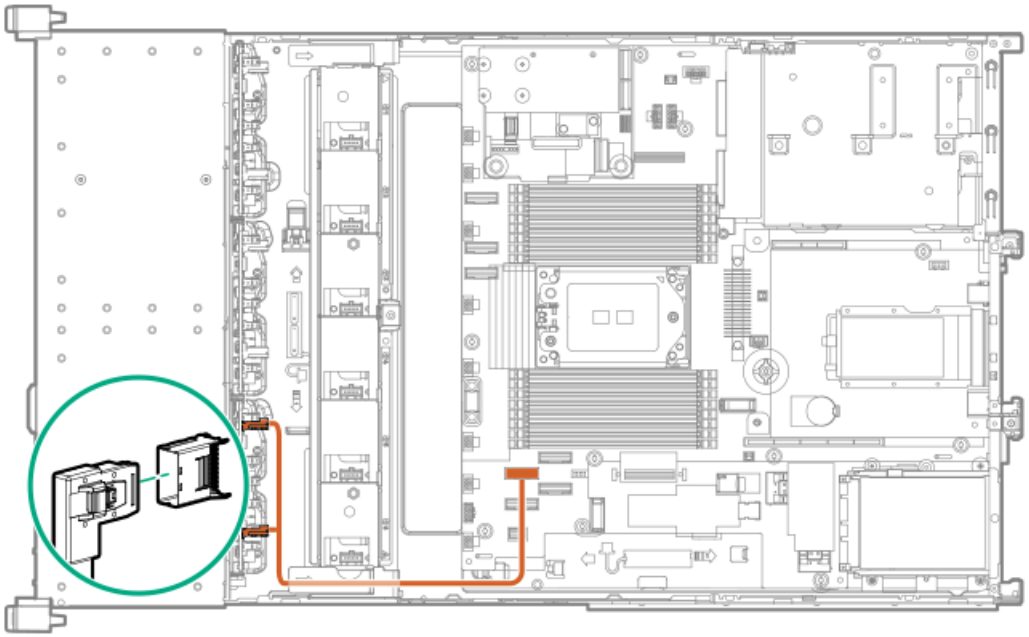

8 SFF SAS/SATA Box 3 to type-a controller cabling

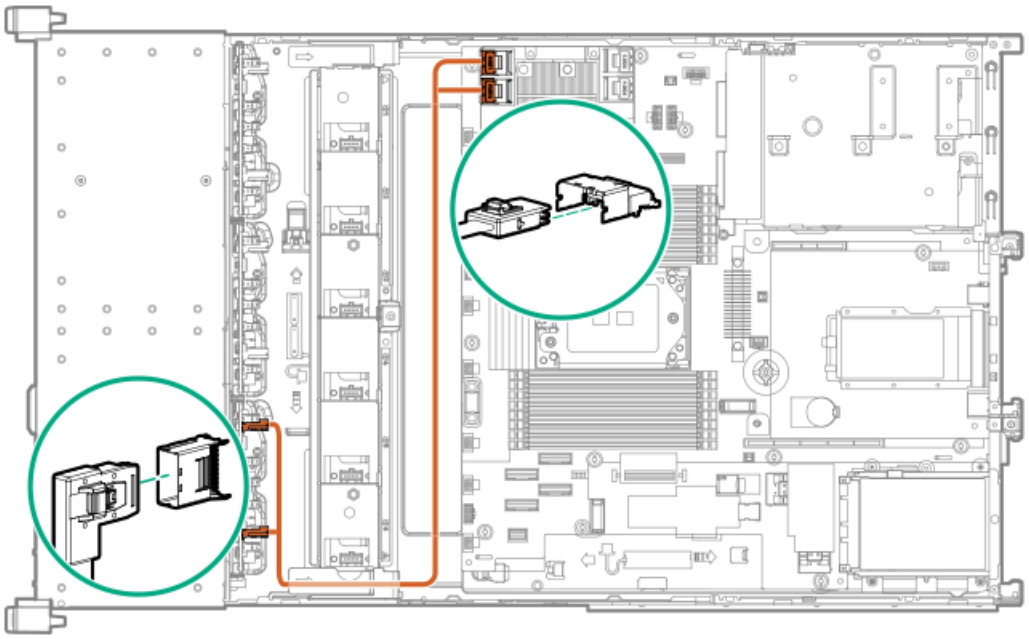

Description
Box 3 port 1 to controller port 1
Box 3 port 2 to controller port 2

8 SFF SAS/SATA Box 3 to PCIe controller cabling

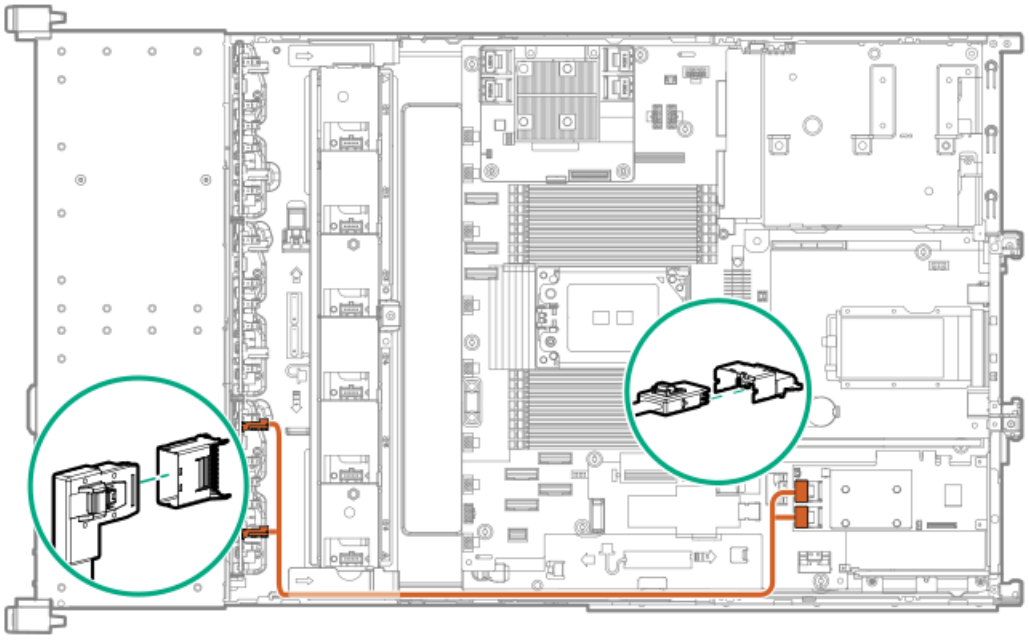

Description
Box 3 port 1 to controller port 1
Box 3 port 2 to controller port 2

8 SFF SAS/SATA Box 2 to type-a controller (E208i-a/E408i-a) cabling

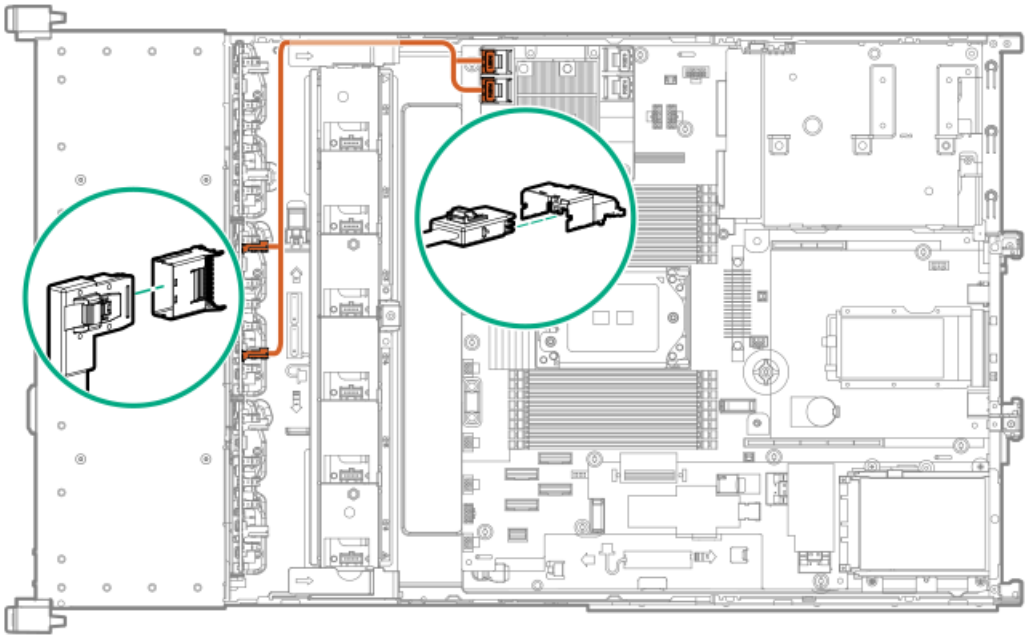

Description
Box 2 port 1 to controller port 1
Box 2 port 2 to controller port 2

8 SFF SAS/SATA Box 2 to type-a controller (P816i-a) cabling

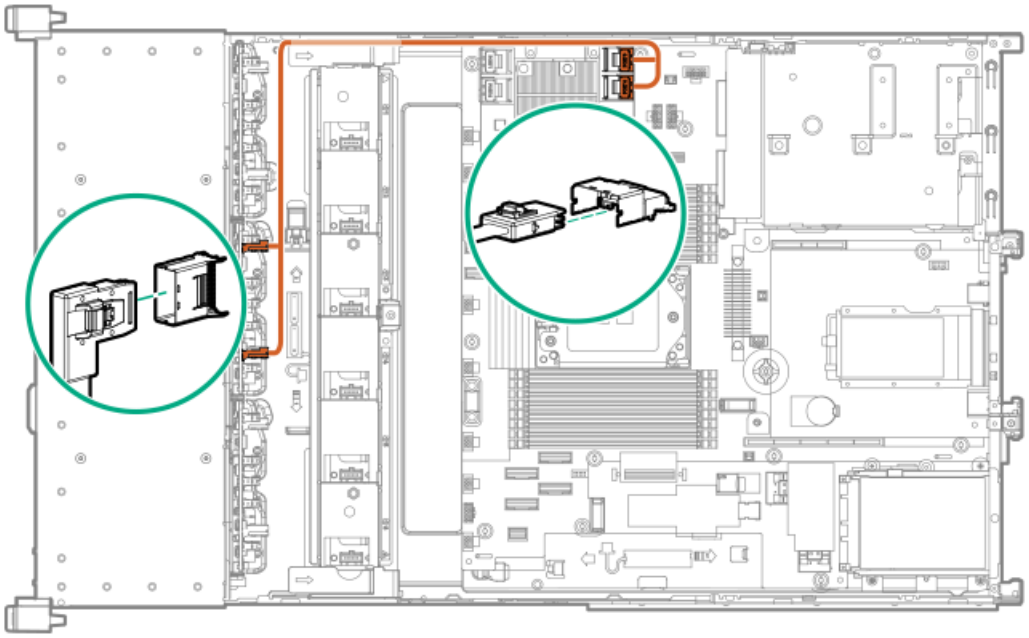

Description
Box 2 port 1 to controller port 3
Box 2 port 2 to controller port 4

8 SFF SAS/SATA Box 1 to type-a controller cabling

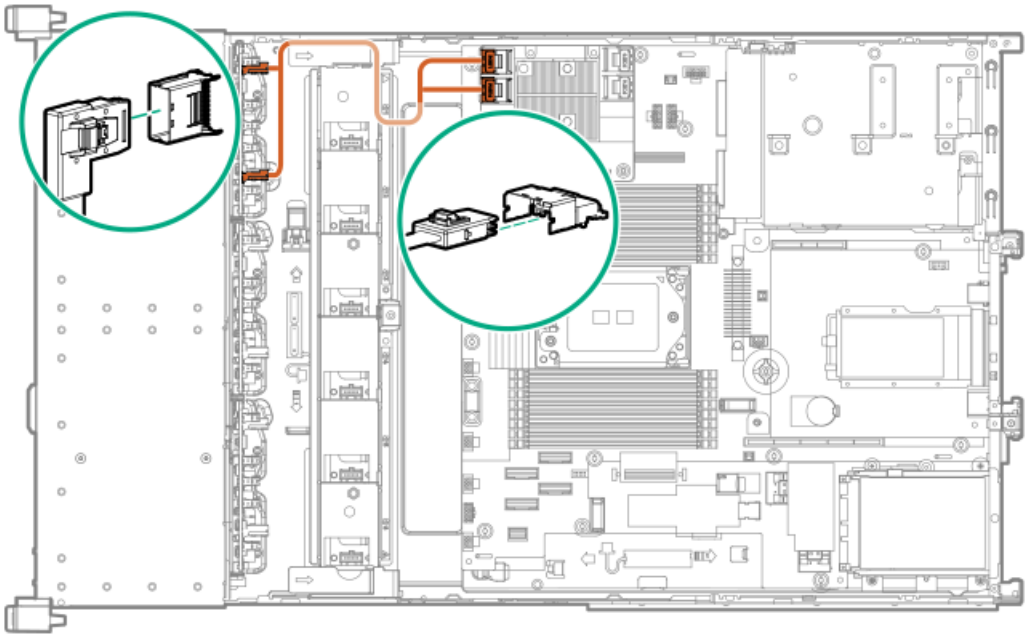

Description
Box 1 port 1 to controller port 1
Box 1 port 2 to controller port 2

16 SFF SAS/SATA Box 2 and Box 3 to P816i-a controller cabling

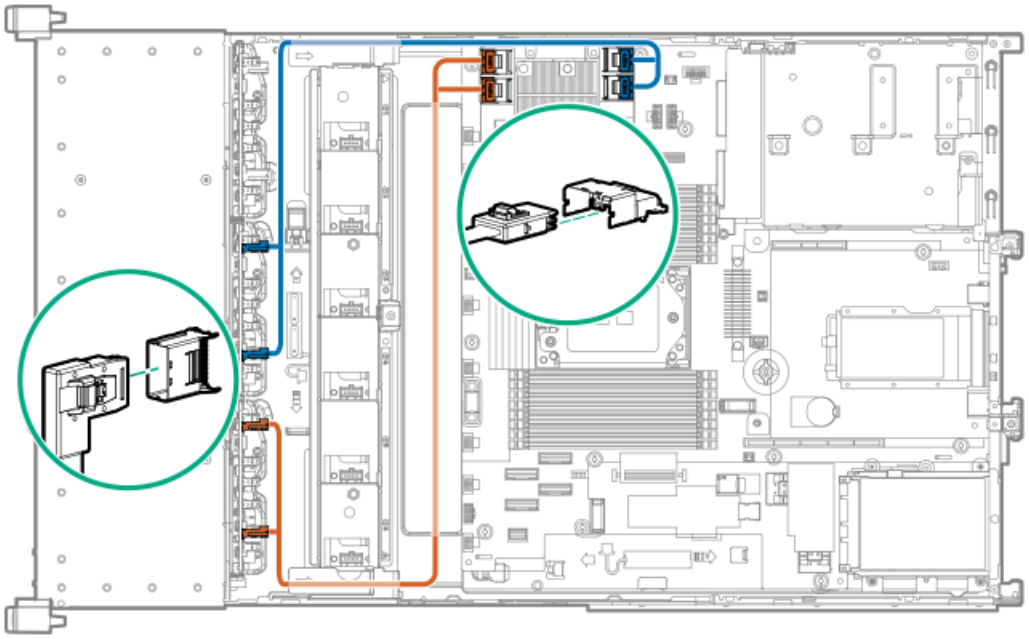

Item	Description
Blue	Box 2 port 1 to controller port 3
Blue	Box 2 port 2 to controller port 4
Orange	Box 3 port 1 to controller port 1
Orange	Box 3 port 2 to controller port 2

24 SFF SAS/SATA to SAS expander cabling

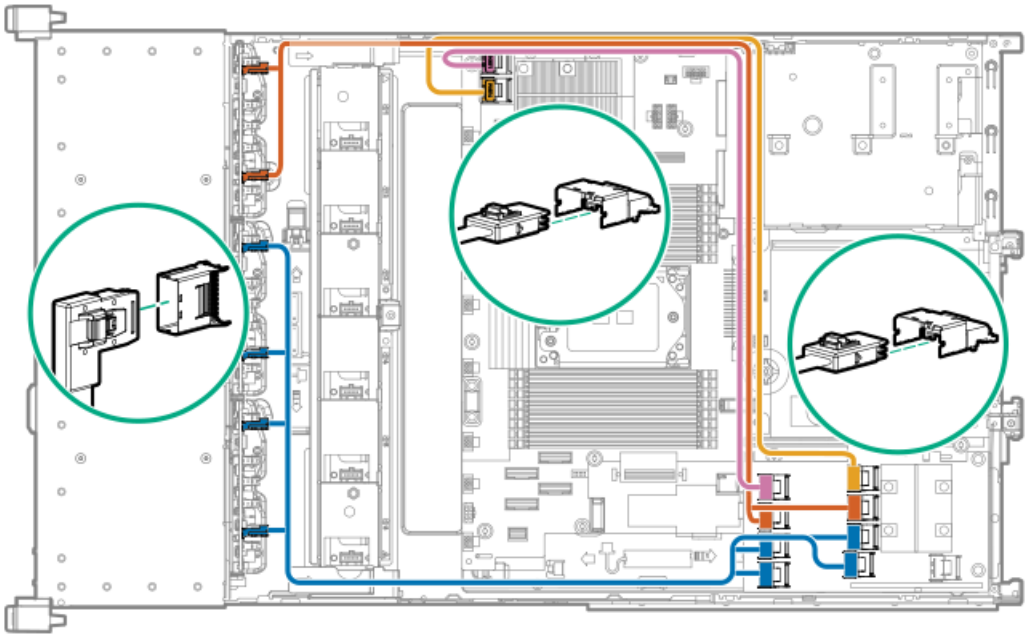

Item	Description
Orange	Box 1 port 1 to SAS expander port 3
Orange	Box 1 port 2 to SAS expander port 4
Blue	Box 2 port 1 to SAS expander port 5
Blue	Box 2 port 2 to SAS expander port 6
Blue	Box 3 port 1 to SAS expander port 7
Blue	Box 3 port 2 to SAS expander port 8
Pink	Type-a controller port 1 to SAS expander port 1
Gold	Type-a controller port 2 to SAS expander port 2

8 SFF NVMe x4 Box 2 cabling

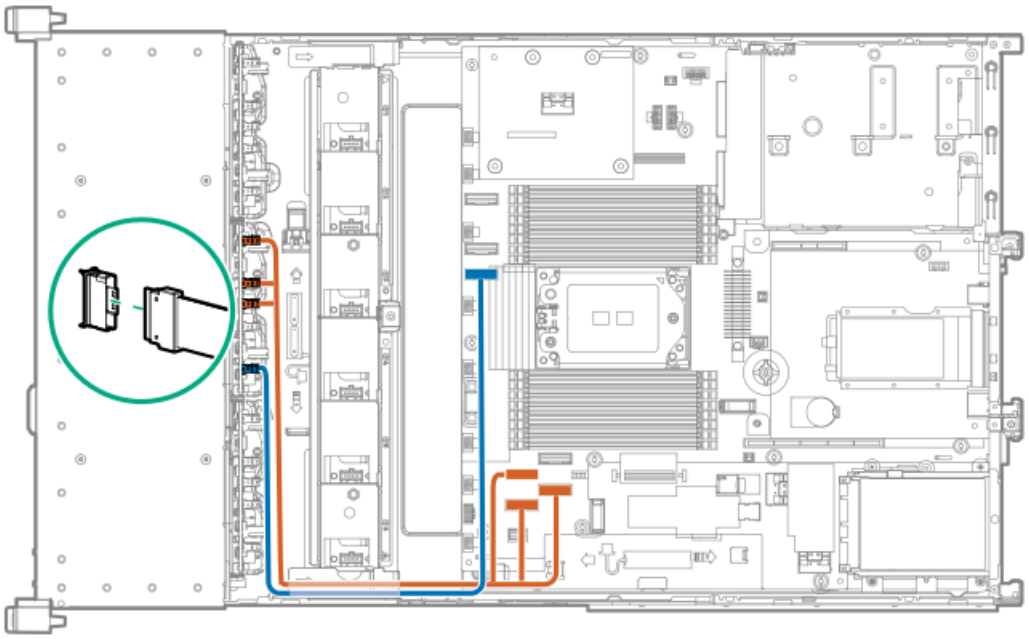

Item	Description
Orange	Box 2 port 1 to system board J17 (port 8A)
Orange	Box 2 port 2 to system board J18 (port 5A)
Orange	Box 2 port 3 to system board J67 (port 4A)
Blue	Box 2 port 4 to system board J57 (port 3A)

16 SFF SAS/SATA Box 1 and Box 3 to P816i-a controller cabling

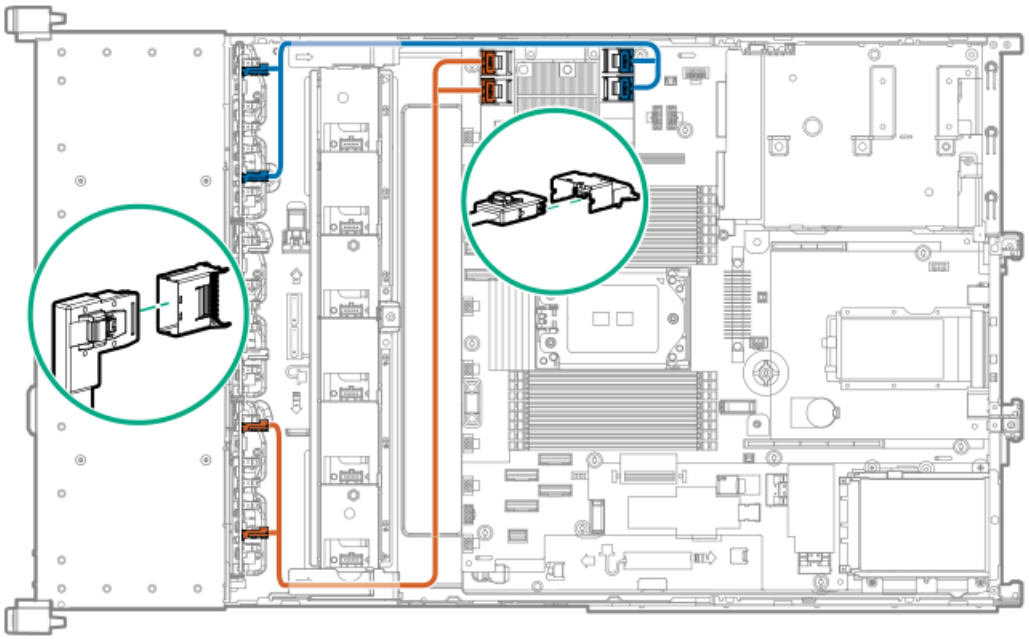

Item	Description
Blue	Box 1 port 1 to controller port 3
Blue	Box 1 port 2 to controller port 4
Orange	Box 3 port 1 to controller port 1
Orange	Box 3 port 2 to controller port 2

16 SFF NVMe x4 Box 1 and Box 2 cabling

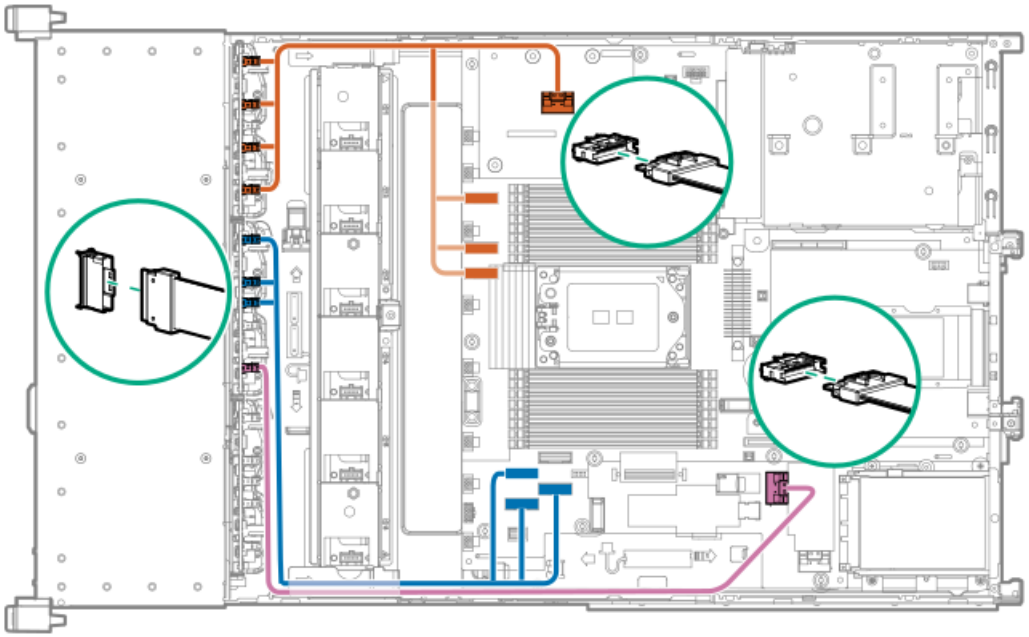

Item	Description
Orange	Box 1 port 1 to AROC 1 port NVMe adapter
Orange	Box 1 port 2 to system board J59 (port 2A)
Orange	Box 1 port 3 to system board J56 (port 1A)
Orange	Box 1 port 4 to system board J57 (port 3A)
Blue	Box 2 port 1 to system board J17 (port 8A)
Blue	Box 2 port 2 to system board J18 (port 5A)
Blue	Box 2 port 3 to system board J67 (port 4A)
Pink	Box 2 port 4 to system board J58 (port 6A)

2 SFF SAS/SATA Box 4 to SAS expander port 9 cabling

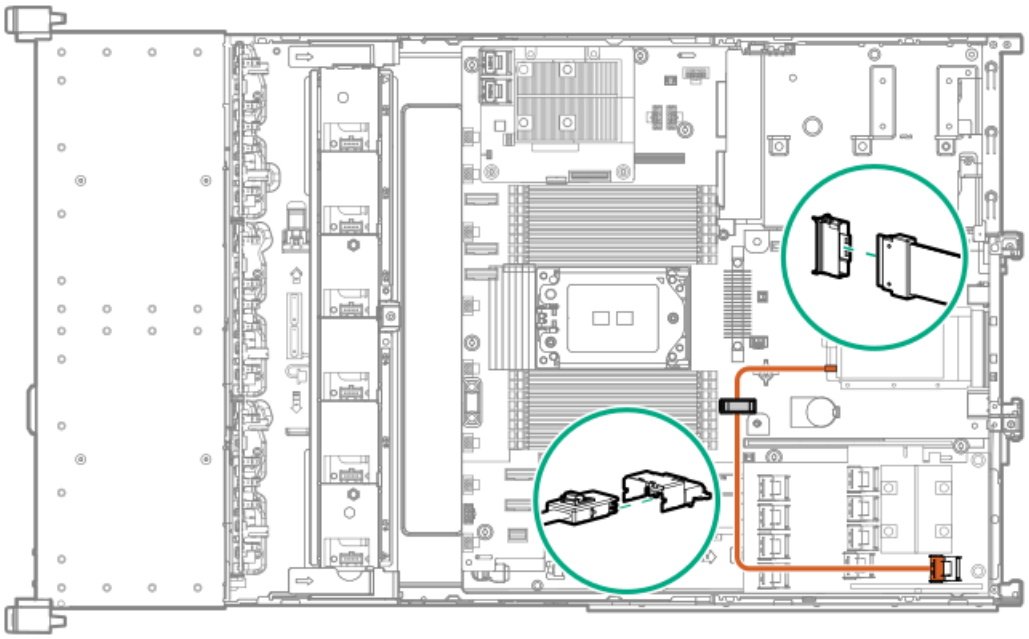

8 SFF Basic U.3x1 to PCIe x16 or x32 tri-mode controller in primary riser cabling

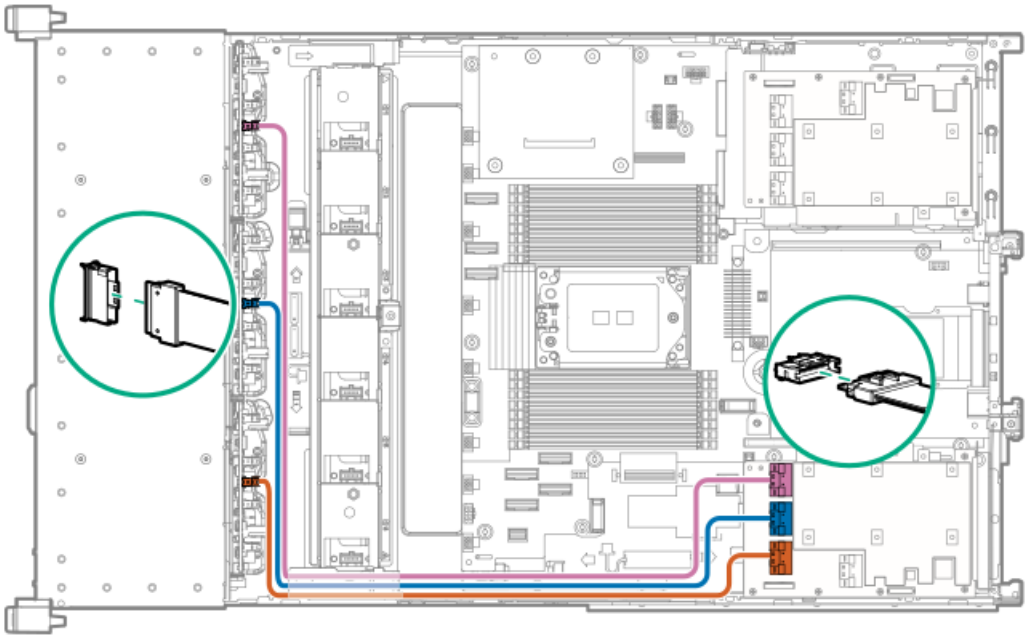

Item	Description
Pink	Box 1 port 1 to x16 controller port 1 or x32 controller port 4
Blue	Box 2 port 1 to x16 controller port 2 or x32 controller port 3
Orange	Box 3 port 1 to x16 controller port 1 or x32 controller port 2

8 SFF Basic U.3x1 to PCIe x16 or x32 Ttri-mode controller in secondary riser cabling

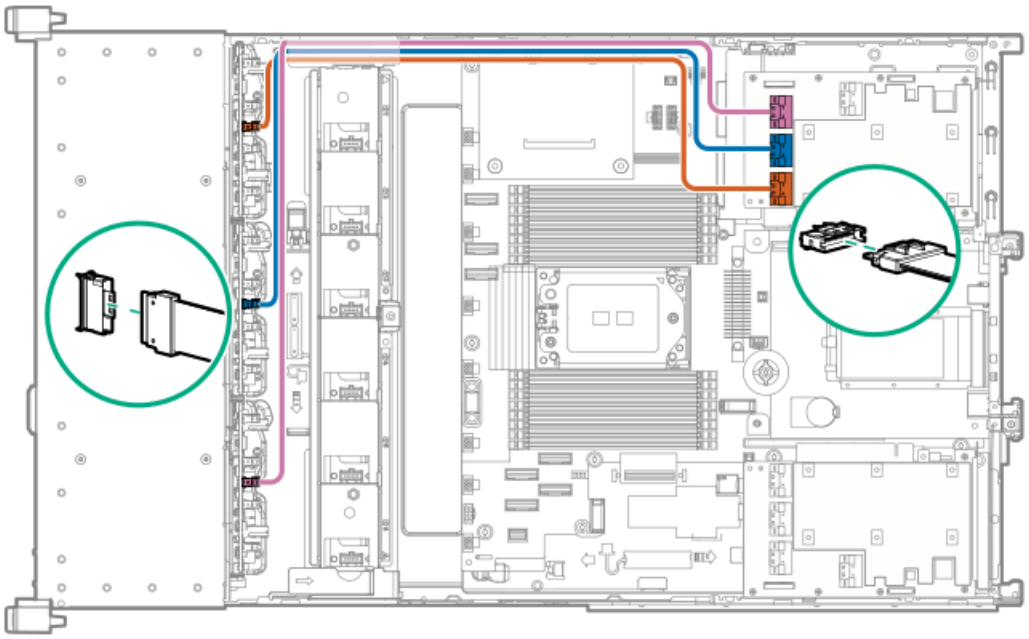

Item	Description
Orange	Box 1 port 1 to x16 controller port 1 or x32 controller port 4
Blue	Box 2 port 1 to x16 controller port 2 or x32 controller port 3
Pink	Box 3 port 1 to x16 controller port 1 or x32 controller port 2

8 SFF Basic U.3x1 Box2 and Box3 to type-a tri-mode controller cabling

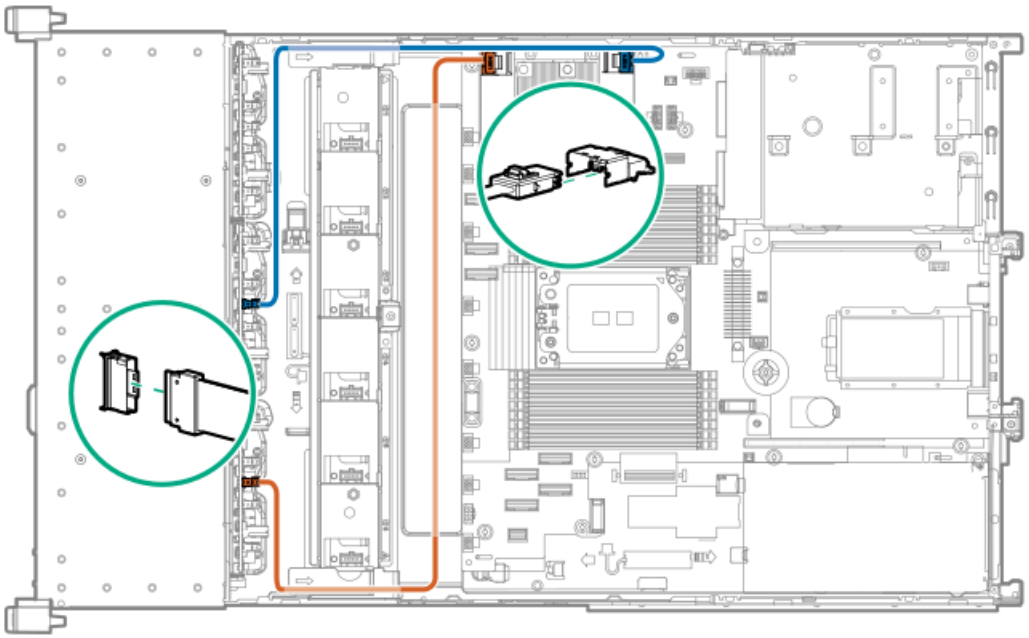

Item	Description
Blue	Box 2 port 1 to controller port 2
Orange	Box 3 port 1 to controller port 1

24 SFF NVMe x4 Premium U.2/U.3 cabling

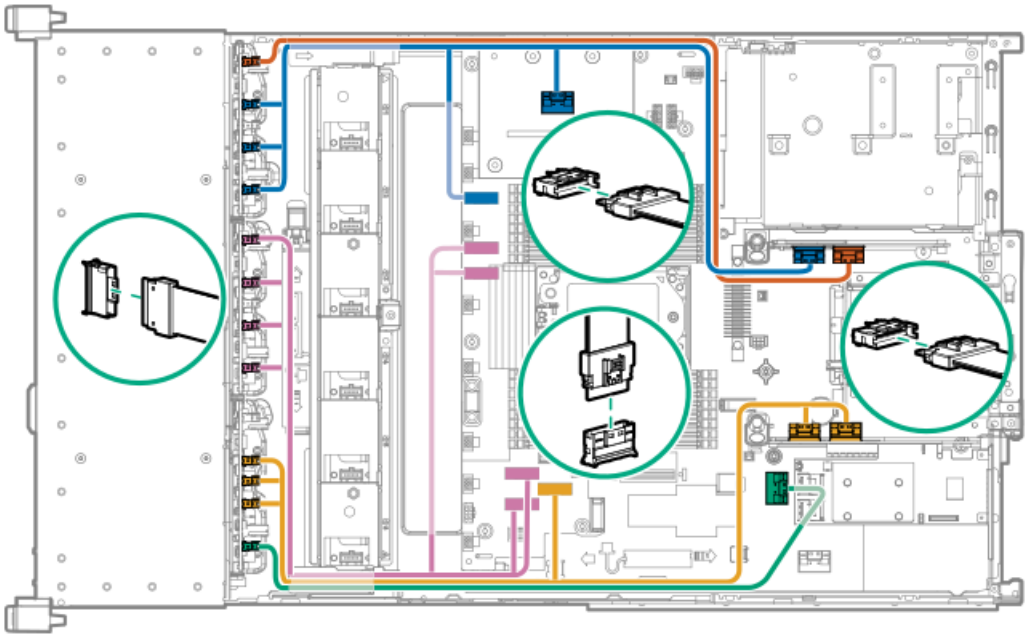

Item	Description
Orange	Box 1 port 1 to secondary riser J2 (port 2B)
Blue	Box 1 port 2 to secondary riser J1 (port 1B)
Blue	Box 1 port 3 to to AROC 1 port NVMe adapter
Blue	Box 1 port 4 to system boad J59 (port 2A)
Pink	Box 2 port 1 to system board J57 (port 3A)
Pink	Box 2 port 2 to system board J56 (port 1A)
Pink	Box 2 port 3 to system board J17 (port 8A)
Pink	Box 2 port 4 to system board J18 (port 5A)
Gold	Box 3 port 1 to system board J67 (port 4A)
Gold	Box 3 port 2 to primary riser J1 (port 3B)
Gold	Box 3 port 3 to primary riser J2 (port 4B)
Green	Box 3 port 4 to system board J58 (port 6A)

8 SFF NVMe x4 Box 3 Premium U.2/U.3 to x32 tri-mode controller in primary riser cabling

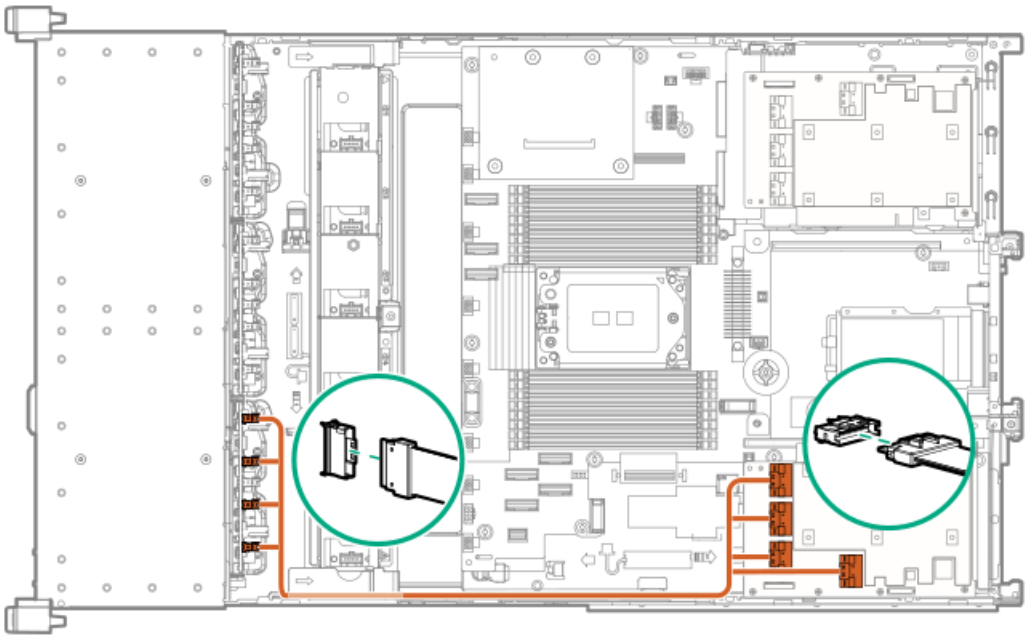

Description
Box 3 port 1 to controller port 1
Box 3 port 2 to controller port 2
Box 3 port 3 to controller port 3
Box 3 port 4 to controller port 4

8 SFF NVMe x4 Box 2 Premium U.2/U.3 to x32 tri-mode controller in primary riser cabling

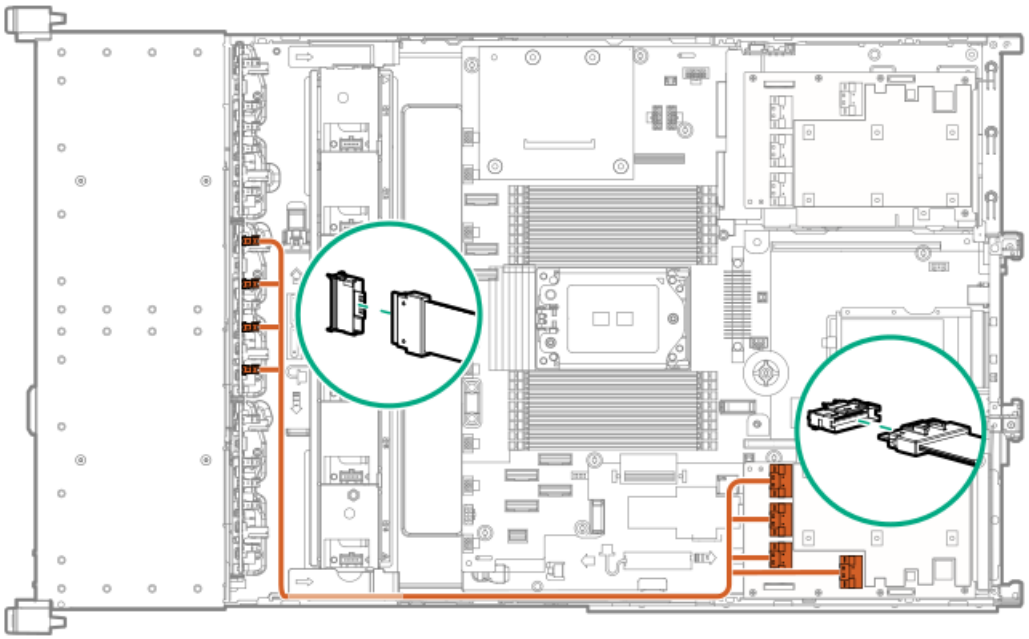

Description
Box 2 port 1 to controller port 1
Box 2 port 2 to controller port 2
Box 2 port 3 to controller port 3
Box 2 port 4 to controller port 4

8 SFF NVMe x4 Box 1 Premium U.2/U.3 to x32 tri-mode controller in secondary riser cabling



Description
Box 1 port 1 to controller port 1
Box 1 port 2 to controller port 2
Box 1 port 3 to controller port 3
Box 1 port 4 to controller port 4

8 SFF NVMe x2 Box 3 Premium U.2/U.3 to x16 or x32 tri-mode controller in primary riser cabling

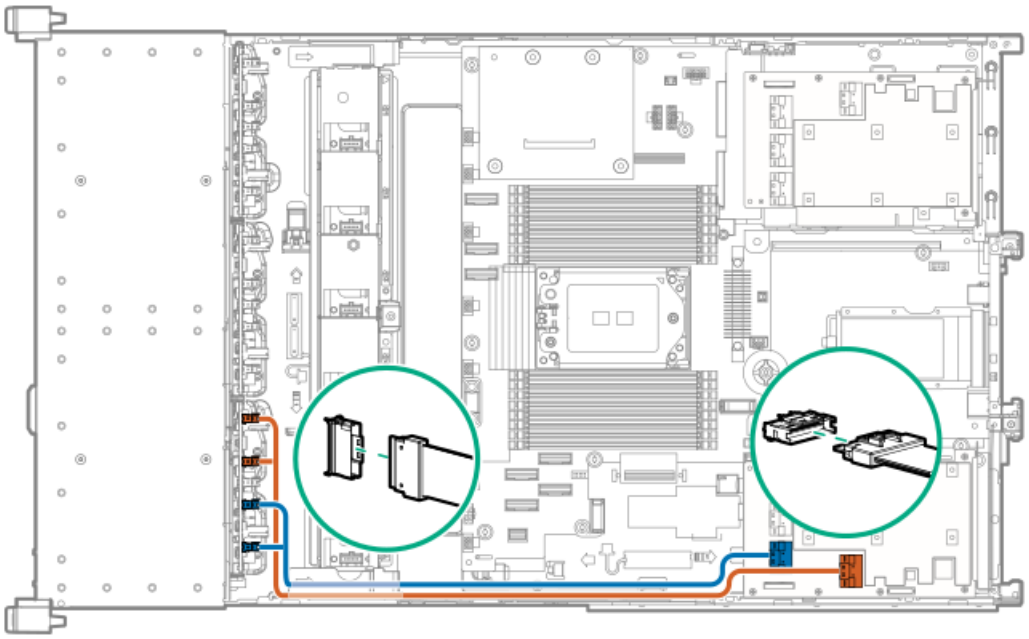

Item	Description
Orange	Box 3 port 1/2 to controller port 1
Blue	Box 3 port 3/4 to controller port 2

8 SFF NVMe x2 Box 2 Premium U.2/U.3 to x16 or x32 tri-mode controller cabling

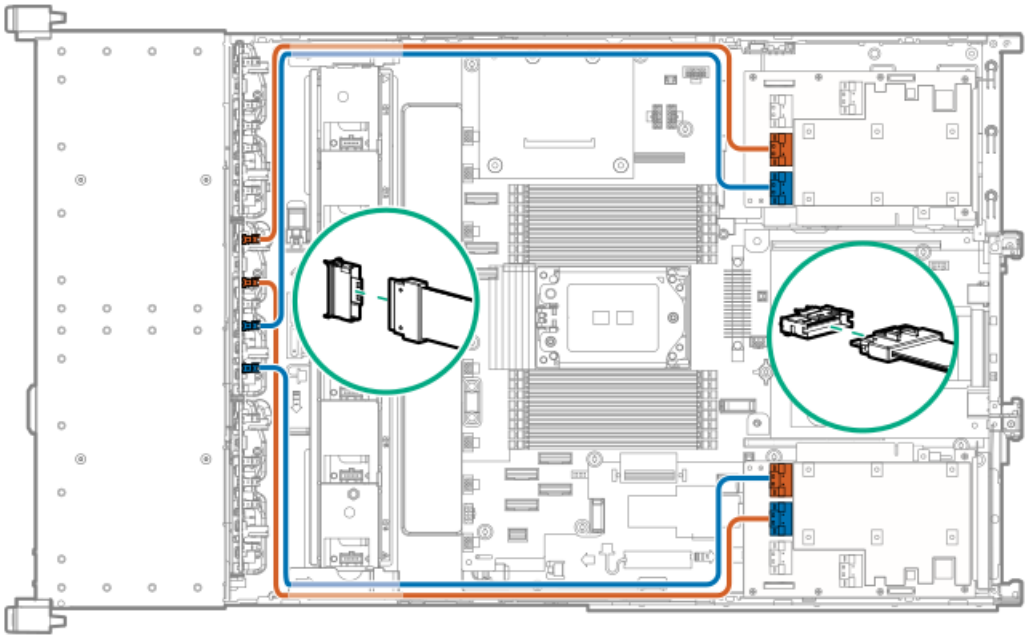

Item	Description
Orange	Box 2 port 1/2 to x16 port 1 or x32 port 3 controller in primary or secondary riser
Blue	Box 2 port 3/4 to x16 port 2 or x32 port 4 controller in primary or secondary riser

8 SFF NVMe x2 Box 1 Premium U.2/U.3 to x16 or x32 tri-mode controller in secondary riser cabling

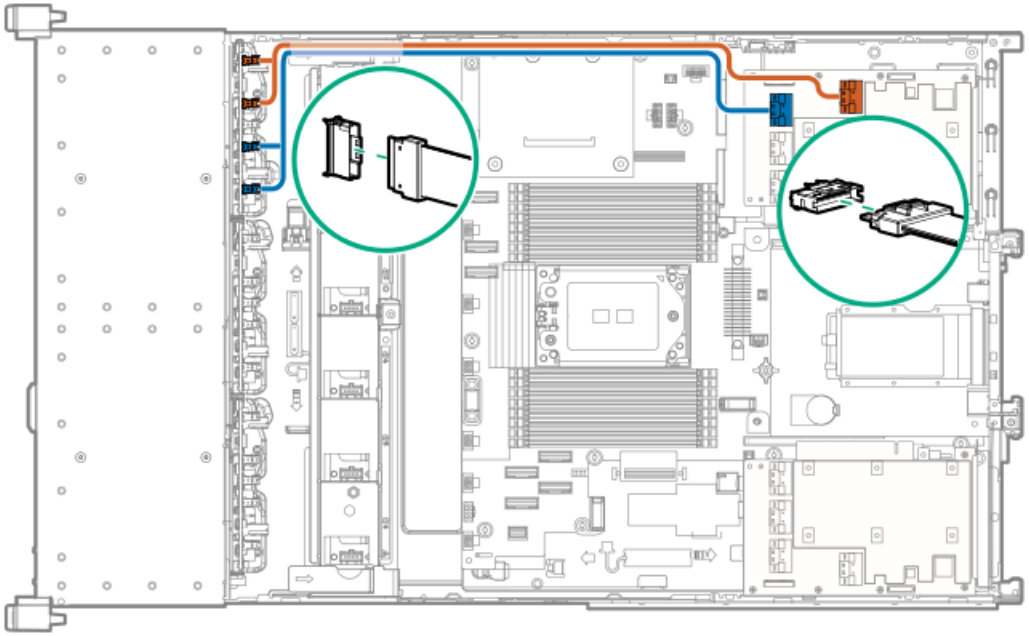

Item	Description
Orange	Box 1 port 1/2 to controller port 1
Blue	Box 1 port 3/4 to controller port 2

2 SFF SAS/SATA Box 4 to system board J1 (port 9A) cabling

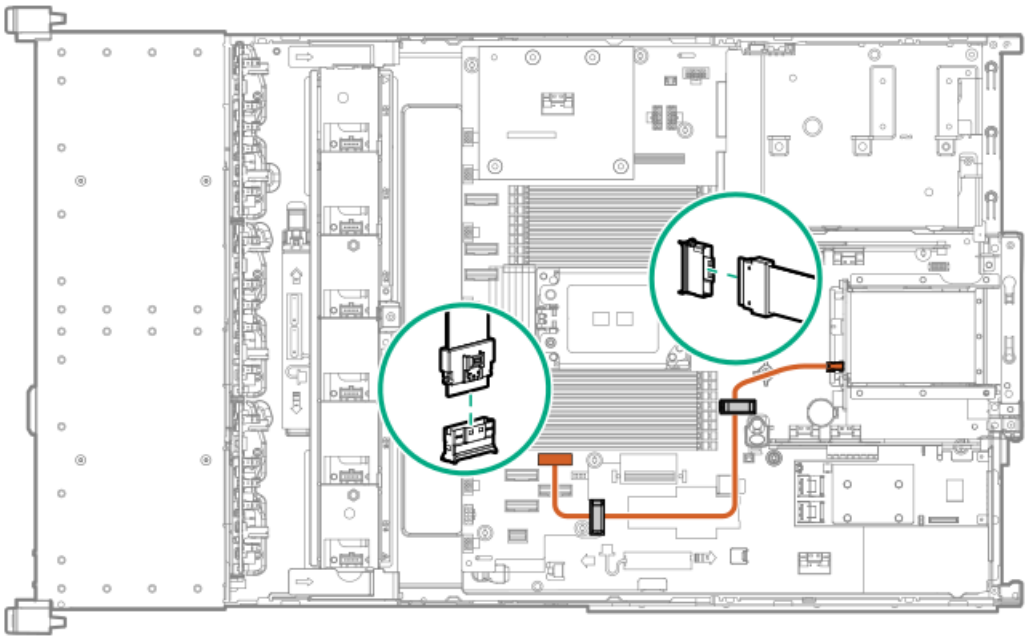

2 SFF SAS/SATA Box 4 to type-a controller cabling

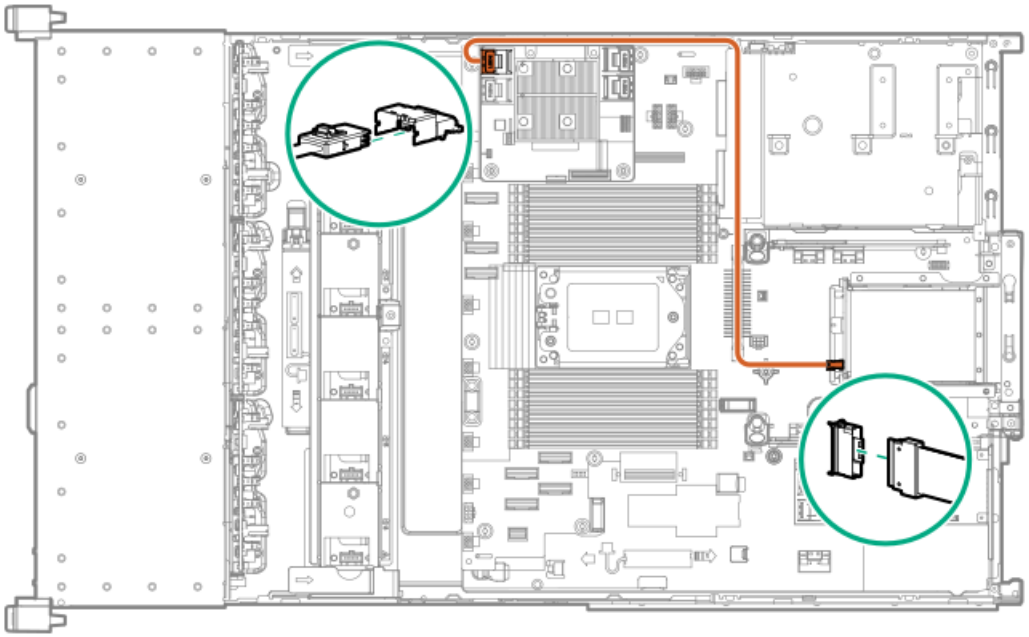

Description

Box 4 port 1 to controller port 1, 2, 3, or 4

2 SFF NVMe Box 4 to tri-mode controller cabling

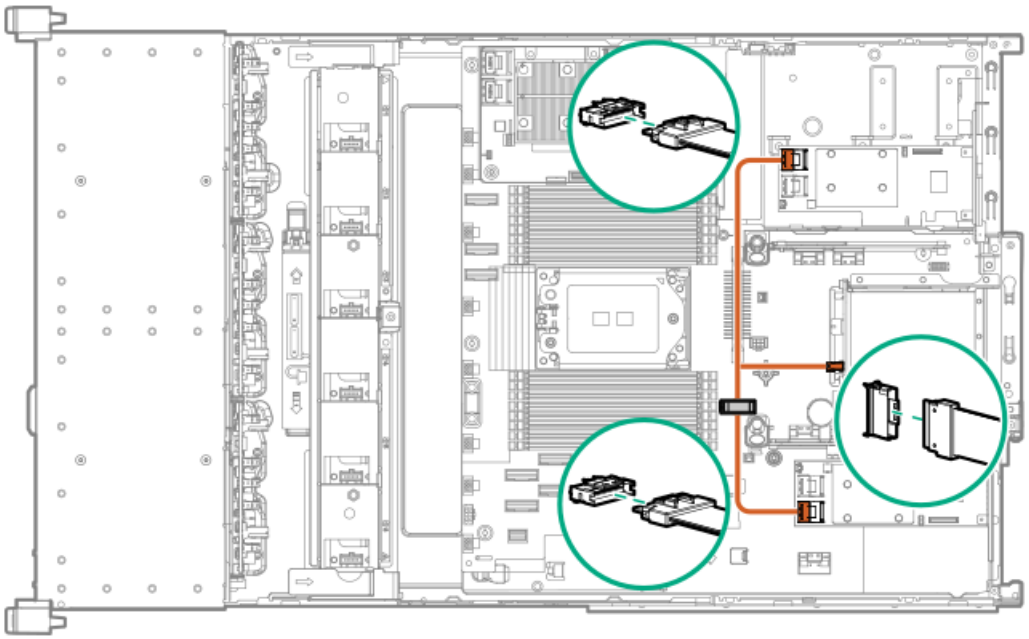

Description

Box 4 port 1 to x16 port 1 or x32 port 2 controller in primary or secondary riser

Energy pack cabling

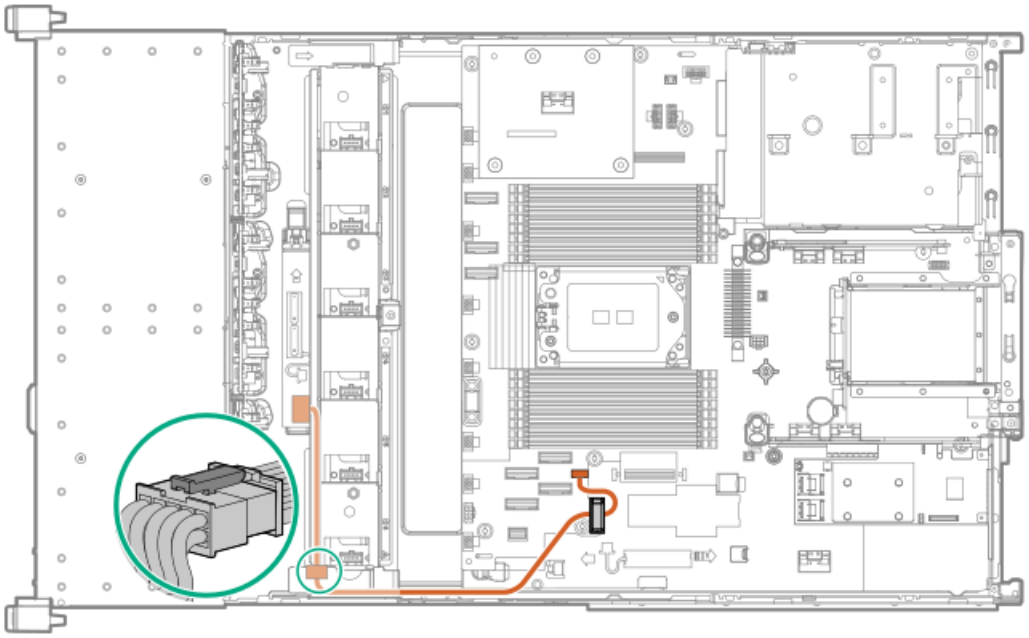

Storage controller backup power cabling

The exact route of the storage controller backup power cabling will depend on:

- The riser slot where the controller is installed.
- The location of the storage controller backup power connector on the controller.

Use the following diagrams for reference only.

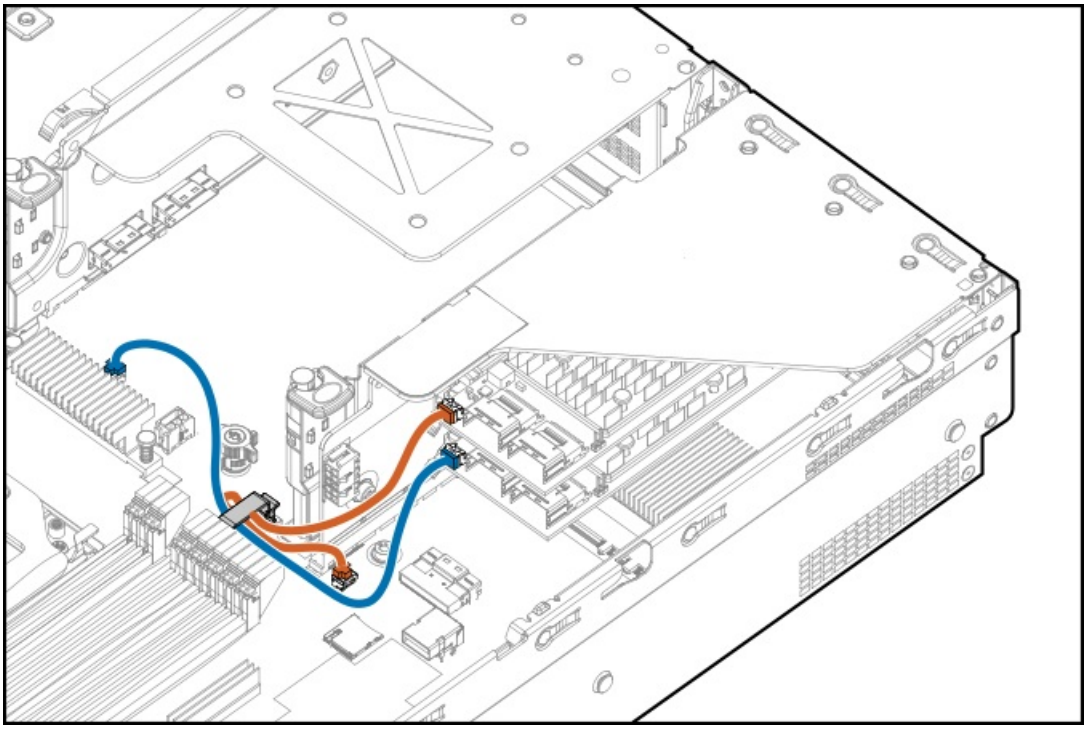

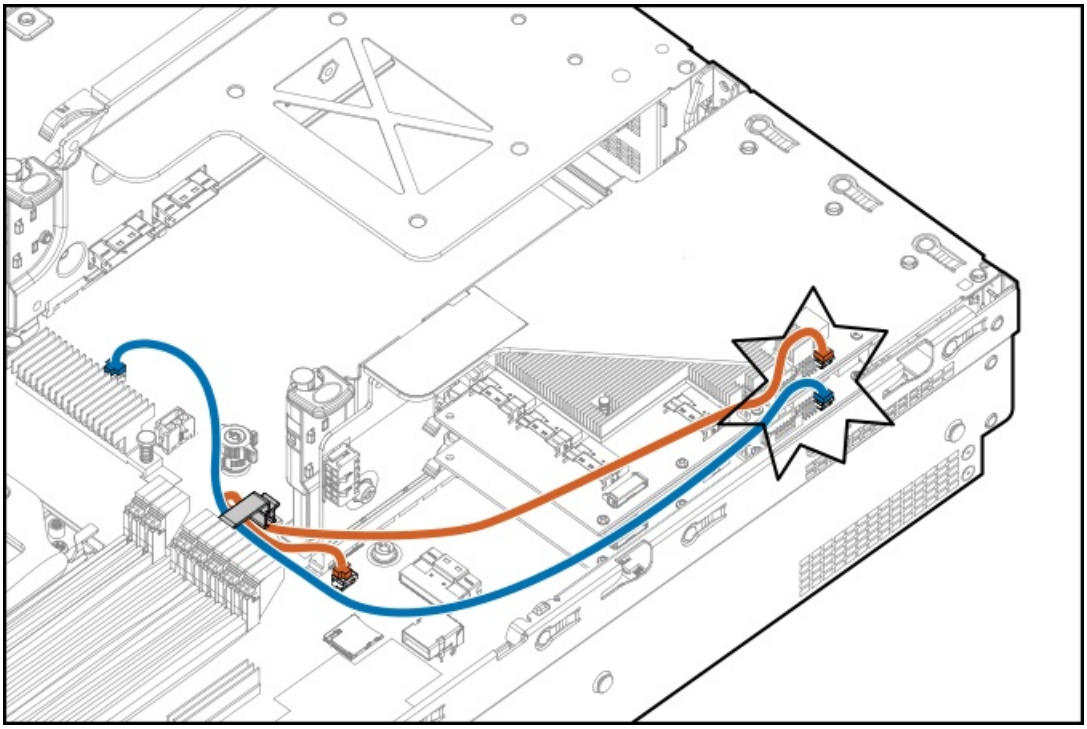

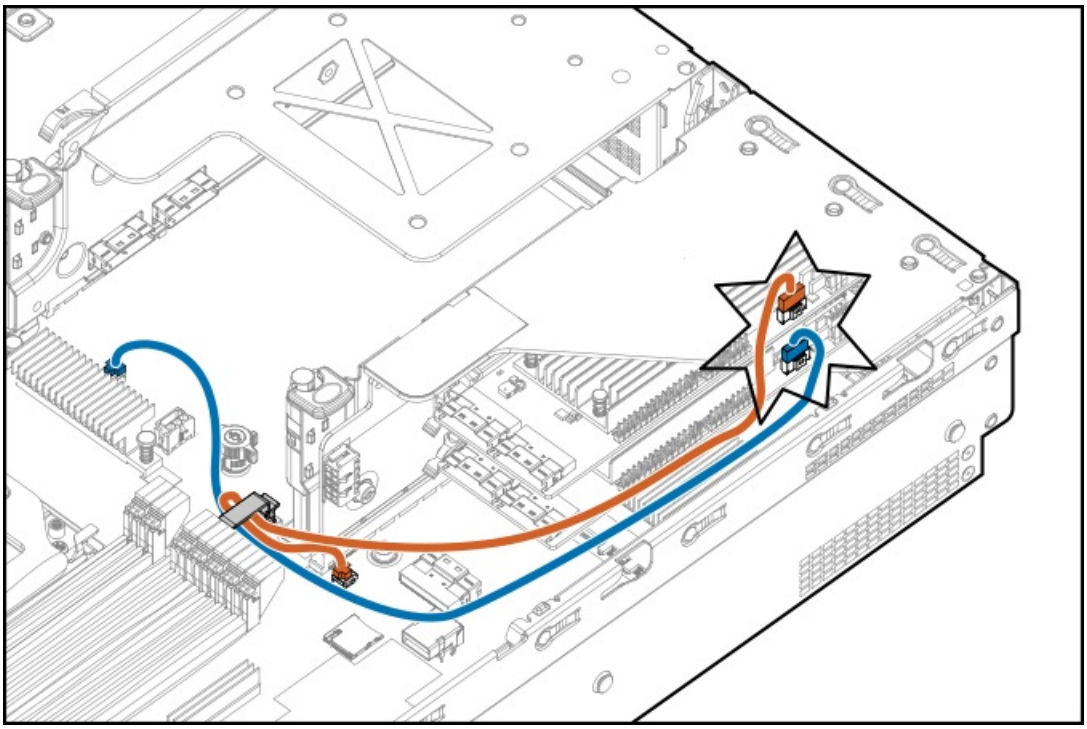

M.2 SATA SSD cabling

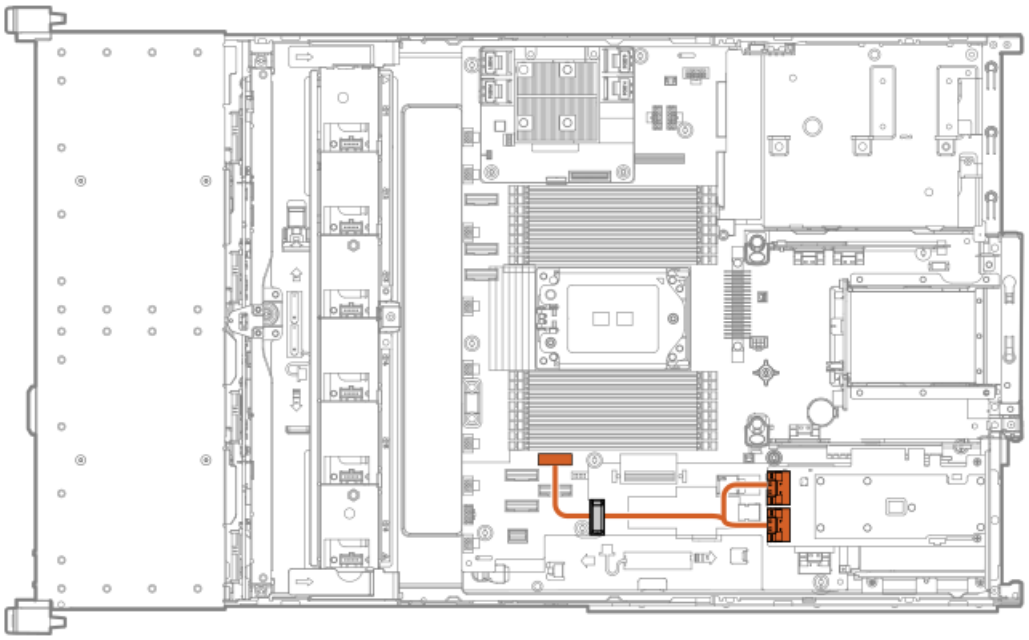

Accelerator or GPU power cabling

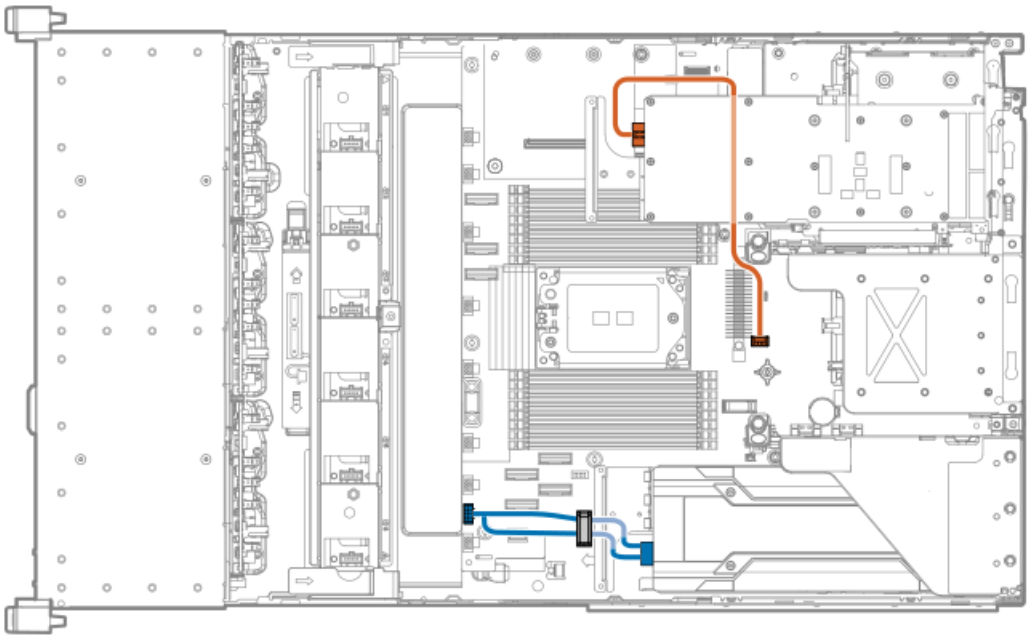

Item	Description
Orange	Low performance
Blue	High and low performance [1]

1 Y-cable to support 2 accelerators in primary riser cage

Fan cabling

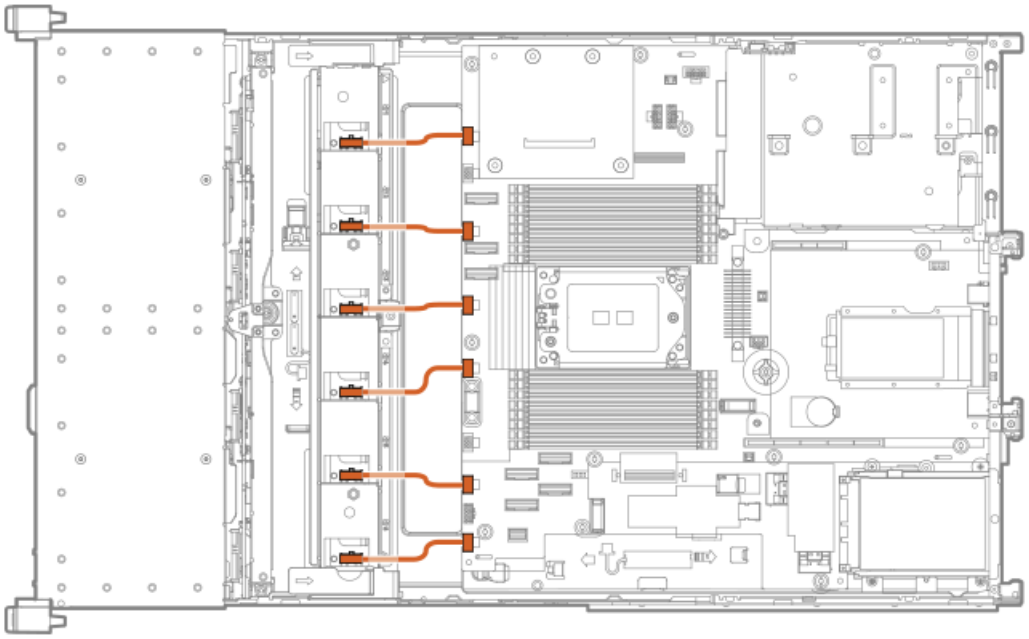

OCP bandwidth upgrade cabling

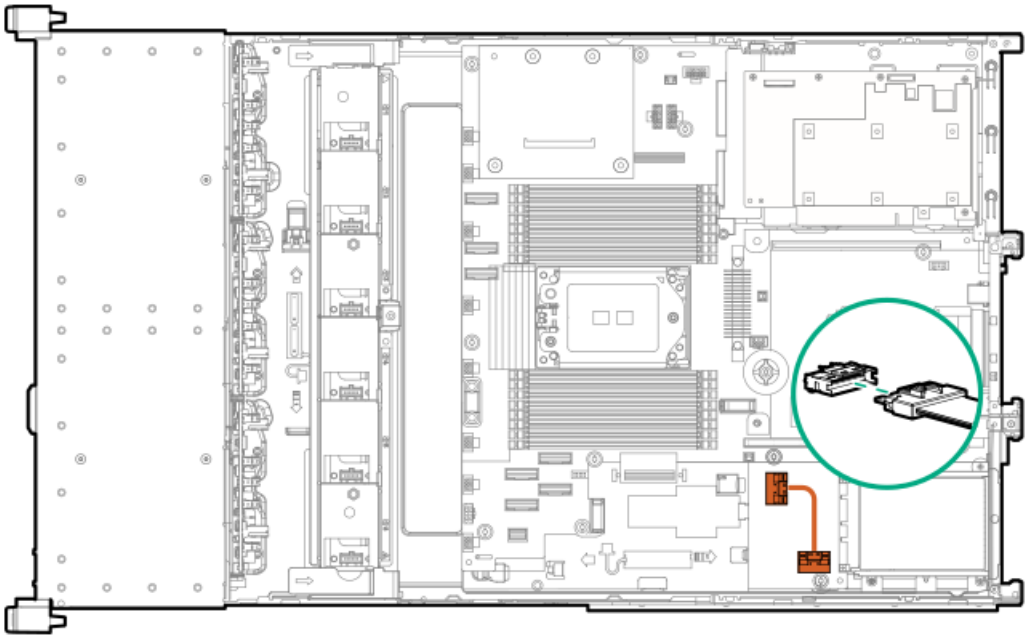

Serial port cabling

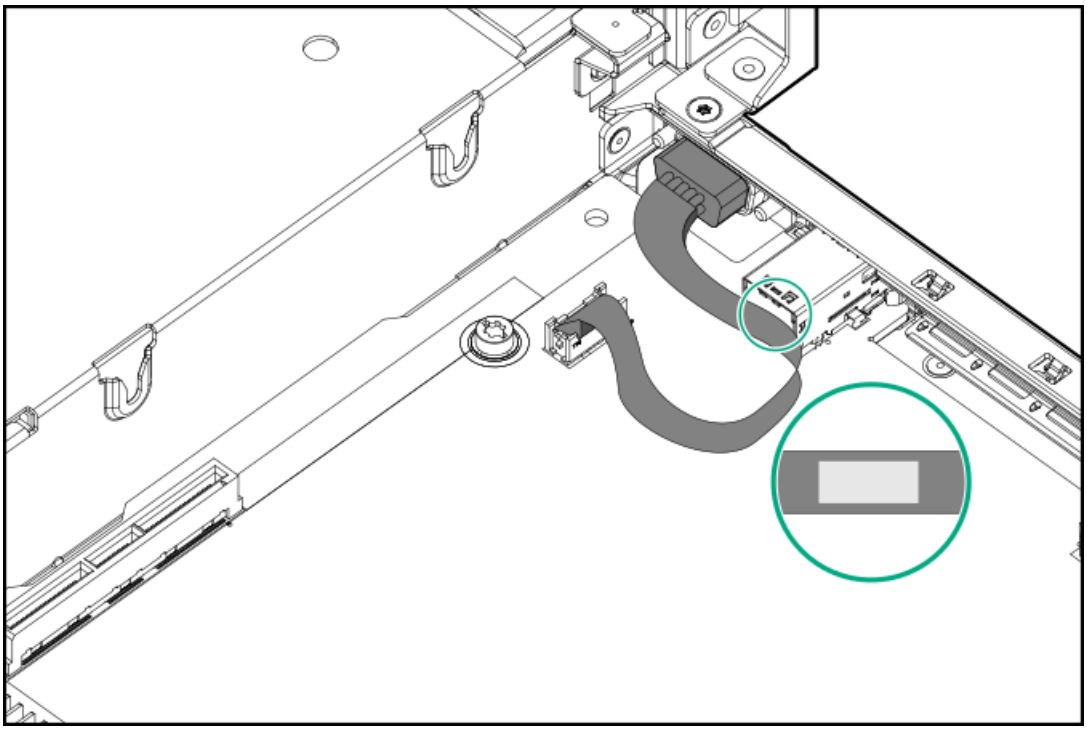

Chassis intrusion detection switch cabling

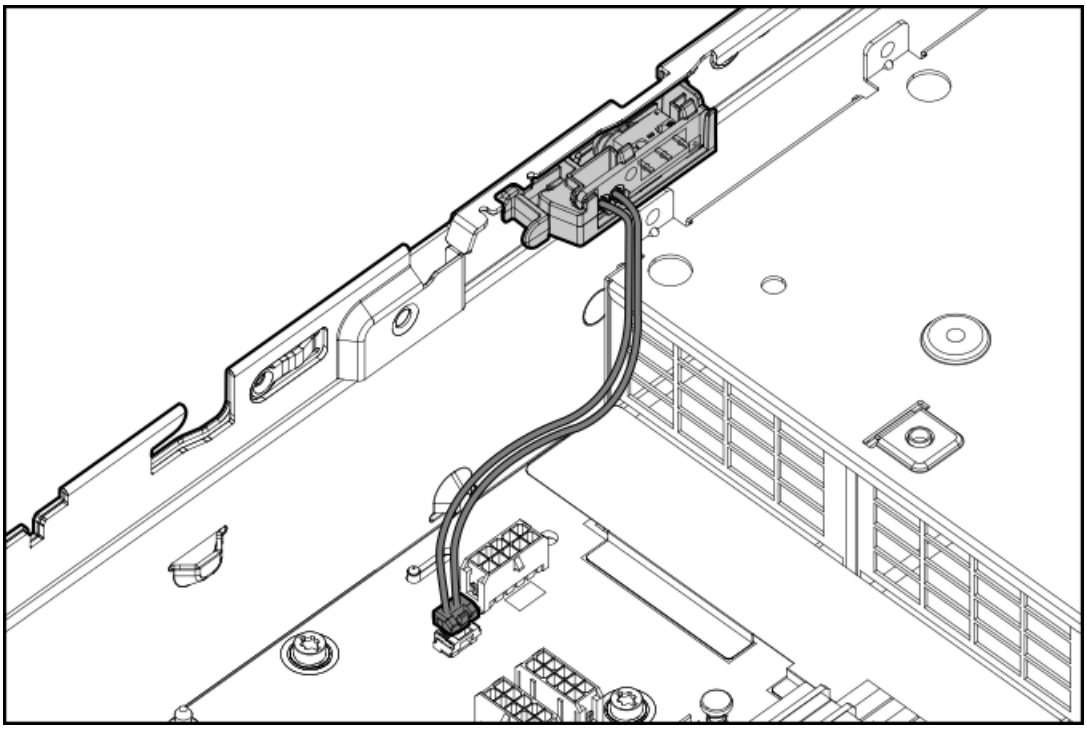

Front I/O cabling

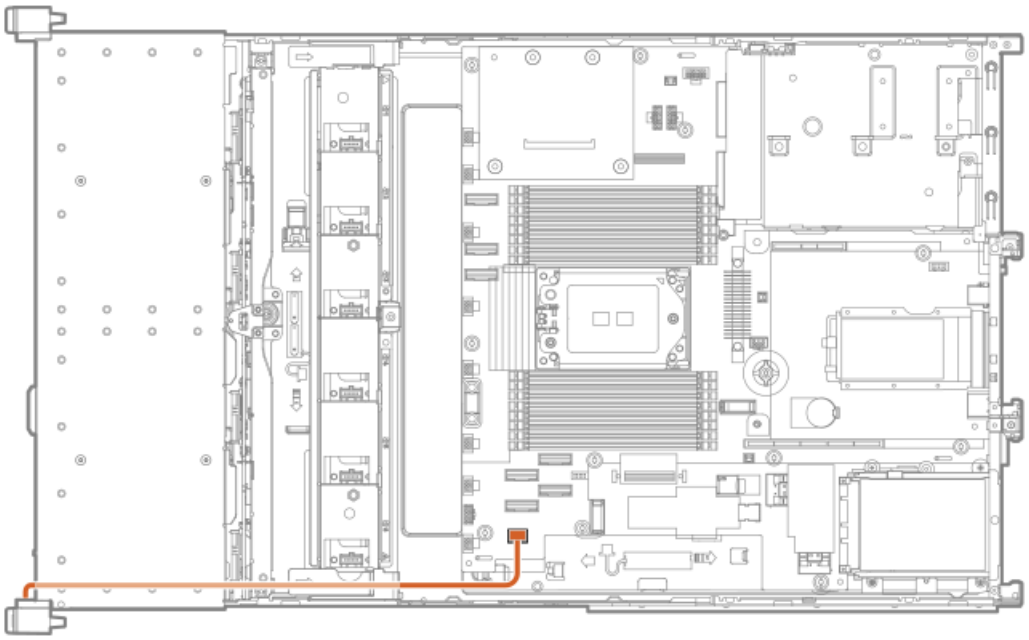

Specifications

This chapter lists the technical specifications for the server, including:

- Environmental specifications

- Mechanical specifications
- Power supply specifications

Subtopics

Environmental specifications
Limited ambient temperature limitation for specific drive configurations
Mechanical specifications
Power supply specifications

Environmental specifications

Specifications	Value
Temperature range*	—
Operating	10°C to 35°C (50°F to 95°F)
Nonoperating	-30°C to 60°C (-22°F to 140°F)
Relative humidity (noncondensing)	—
Operating	8% to 90% 28°C (82.4°F) maximum wet bulb temperature, noncondensing
Nonoperating	5% to 95% 38.7°C (101.7°F) maximum wet bulb temperature, noncondensing
Altitude	—
Operating	3050 m (10,000 ft) This value may be limited by the type and number of options installed. Maximum allowable altitude change rate is 457 m/min (1,500 ft/min).
Nonoperating	9144 m (30,000 ft) Maximum allowable altitude change rate is 457 m/min (1,500 ft/min).

Standard operating support

10° to 35°C (50° to 95°F) at sea level with an altitude derating of 1.0°C per every 305 m (1.8°F per every 1,000 ft) above sea level to a maximum of 3,050 m (10,000 ft), no direct sustained sunlight. Maximum rate of change is 20°C/hr (36°F/hr). The upper limit and rate of change may be limited by the type and number of options installed.

System performance during standard operating support might be reduced if operating above 30°C (86°F).

Extended ambient operating support

For approved hardware configurations, the supported system inlet range is extended to be: 5° to 10°C (41° to 50°F) and 35° to 40°C (95° to 104°F) at sea level with an altitude derating of 1.0°C per every 175 m (1.8°F per every 574 ft) above 900 m (2,953 ft) to a maximum of 3050 m (10,000 ft). The approved hardware configurations for this system are listed at the **Hewlett Packard Enterprise website**.

40°C to 45°C (104°F to 113°F) at sea level with an altitude derating of 1.0°C per every 125 m (1.8°F per every 410 ft) above 900 m (2953 ft) to a maximum of 3,050 m (10,000 ft). The approved hardware configurations for this system are listed on the **Hewlett Packard Enterprise website**.

Limited ambient temperature limitation for specific drive configurations

When either hardware option is installed, observe the following ambient temperature values:

- 280 W processor: 25°C (77°F)
- Rear 2 SFF NVMe drive: 30°C (86°F)

The above temperature values require the high-performance fans to be installed.

Mechanical specifications

Specification	Value
Height	8.75 cm (3.46 in)
Depth, SFF	71.36 cm (28.09 in)
Depth, LFF	75.08 cm (29.56 in)
Width	44.54 cm (17.54 in)
Weight, SFF minimum	11.66 kg (25.71 lb)
Weight, SFF maximum	24.20 kg (53.35 lb)
Weight, LFF minimum	12.57 kg (27.71 lb)
Weight, LFF maximum	26.28 kg (57.94 lb)

Power supply specifications

Depending on the installed options and the regional location where the server was purchased, the server can be configured with one of the following power supplies:

- HPE 500 W Flex Slot Platinum Hot-plug Low Halogen Power Supply (94% efficiency)
- HPE 800 W Flex Slot Platinum Hot-plug Low Halogen Power Supply
- HPE 800 W Flex Slot Titanium Hot-plug Low Halogen Power Supply
- HPE 800 W Flex Slot Universal Hot-plug Low Halogen Power Supply
- HPE 800 W Flex Slot -48 VDC Hot-plug Low Halogen Power Supply
- HPE 1600 W Flex Slot Platinum Hot-plug Low Halogen Power Supply
- HPE 1600 W Flex Slot -48 VDC Hot-plug Power Supply

For detailed power supply specifications, see the QuickSpecs on the **Hewlett Packard Enterprise website**.

CAUTION

Mixing different types of power supplies in the same server might:

- Limit or disable some power supply features including support for power redundancy.
- Cause the system to become unstable and might shut down.

To ensure access to all available features, all power supplies in the same server should have the same output and efficiency ratings. Verify that all power supplies have the same part number and label color.

Subtopics

HPE 500 W Flex Slot Platinum Hot-plug Low Halogen Power Supply (94% efficiency)
HPE 800 W Flex Slot Platinum Hot-plug Low Halogen Power Supply

HPE 800 W Flex Slot Titanium Hot-plug Low Halogen Power Supply
HPE 800 W Flex Slot Universal Hot-plug Low Halogen Power Supply
HPE 800 W Flex Slot -48 VDC Hot-plug Low Halogen Power Supply
HPE 1600 W Flex Slot Platinum Hot-plug Low Halogen Power Supply
HPE 1600 W Flex Slot -48 VDC Hot-plug Power Supply

HPE 500 W Flex Slot Platinum Hot-plug Low Halogen Power Supply (94% efficiency)

Specification	Value
Input requirements	—
Rated input voltage	100 VAC to 240 VAC 240 VDC for China only
Rated input frequency	50 Hz to 60 Hz Not applicable to 240 VDC
Rated input current	5.8 A at 100 VAC 2.8 A at 200 VAC 2.4 A at 240 VDC for China only
Maximum rated input power	580 W at 100 VAC 560 W at 200 VAC 558 W at 240 VDC for China only
BTUs per hour	1999 at 100 VAC 1912 at 200 VAC 1904 at 240 VDC for China only
Power supply output	—
Rated steady-state power	500 W at 100 VAC to 127 VAC input 500 W at 100 VAC to 240 VAC input 500 W at 240 VDC input for China only
Maximum peak power	500 W at 100 VAC to 127 VAC input 500 W at 100 VAC to 240 VAC input 500 W at 240 VDC input for China only

HPE 800 W Flex Slot Platinum Hot-plug Low Halogen Power Supply

Specification	Value
Input requirements	—
Rated input voltage	100 VAC to 127 VAC 200 VAC to 240 VAC 240 VDC for China only
Rated input frequency	50 Hz to 60 Hz Not applicable to 240 VDC
Rated input current	9.1 A at 100 VAC 4.4 A at 200 VAC 3.6 A at 240 VDC for China only
Maximum rated input power	899 W at 100 VAC 867 W at 200 VAC 864 W at 240 VDC for China only
BTUs per hour	3067 at 100 VAC 2958 at 200 VAC 2949 at 240 VAC for China only
Power supply output	—
Rated steady-state power	800 W at 100 VAC to 127 VAC input 800 W at 100 VAC to 240 VAC input 800 W at 240 VDC input for China only
Maximum peak power	800 W at 100 VAC to 127 VAC input 800 W at 100 VAC to 240 VAC input 800 W at 240 VDC input for China only

HPE 800 W Flex Slot Titanium Hot-plug Low Halogen Power Supply

Specification	Value
Input requirements	—
Rated input voltage	200 VAC to 240 VAC 240 VDC for China only
Rated input frequency	50 Hz to 60 Hz Not applicable to 240 VDC
Rated input current	4.3 A at 200 VAC 3.6 A at 240 VAC 3.6 A at 240 VDC for China only
Maximum rated input power	851 W at 200 VAC 848 W at 240 VAC 848 W at 240 VDC for China only
BTUs per hour	2905 at 200 VAC 2893 at 240 VAC 2893 at 240 VDC for China only
Power supply output	—
Rated steady-state power	800 W at 200 VAC to 240 VAC input 800 W at 240 VDC input for China only
Maximum peak power	800 W at 200 VAC to 240 VAC input 800 W at 240 VDC input for China only

HPE 800 W Flex Slot Universal Hot-plug Low Halogen Power Supply

Specification	Value
Input requirements	—
Rated input voltage	200 VAC to 277 VAC 380 VDC
Rated input frequency	50 Hz to 60 Hz
Rated input current	4.4 A at 200 VAC 3.8 A at 230 VAC 2.3 A at 380 VDC
Maximum rated input power	869 W at 200 VAC 865 W at 230 VAC 861 W at 277 VAC 863 W at 380 VDC
BTUs per hour	2964 at 200 VAC 2951 at 230 VAC 2936 at 277 VAC 2943 at 380 VDC
Power supply output	—
Rated steady-state power	800 W at 200 VAC to 277 VAC input
Maximum peak power	800 W at 200 VAC to 277 VAC input

HPE 800 W Flex Slot -48 VDC Hot-plug Low Halogen Power Supply

Specification	Value
Input requirements	—
Rated input voltage	-40 VDC to -72 VDC -48 VDC nominal input
Rated input current	22.1 A at -40 VDC input 18.2 A at -48 VDC input, nominal input 12.0 A at -72 VDC input
Rated input power	874 W at -40 VDC input 865 W at -48 VDC input, nominal input 854 W at -72 VDC input
Rated input power (BTUs per hour)	2983 at -40 VDC input 2951 at -48 VDC input, nominal input 2912 at -72 VDC input
Power supply output	—
Rated steady-state power	800 W at -40 VDC to -72 VDC
Maximum peak power	800 W at -40 VDC to -72 VDC
Maximum peak power	800 W at -40 VDC to -72 VDC input

WARNING

To reduce the risk of electric shock or energy hazards:

- This equipment must be installed by trained service personnel.
- Connect the equipment to a reliably grounded secondary circuit source. A secondary circuit has no direct connection to a primary circuit and derives its power from a transformer, converter, or equivalent isolation device.
- The branch circuit overcurrent protection must be rated 27 A.

CAUTION

This equipment is designed to permit the connection of the earthed conductor of the DC supply circuit to the earthing conductor at the equipment.

If this connection is made, all of the following must be met:

- This equipment must be connected directly to the DC supply system earthing electrode conductor or to a bonding jumper from an earthing terminal bar or bus to which the DC supply system earthing electrode conductor is connected.
- This equipment must be located in the same immediate area (such as adjacent cabinets) as any other equipment that has a connection between the earthed conductor of the same DC supply circuit and the earthing conductor, and also the point of earthing of the DC system. The DC system must be earthed elsewhere.
- The DC supply source is to be located within the same premises as the equipment.
- Switching or disconnecting devices must not be in the earthed circuit conductor between the DC source and the point of connection of the earthing electrode conductor.

HPE 1600 W Flex Slot Platinum Hot-plug Low Halogen Power Supply

Specification	Value
Input requirements	—
Rated input voltage	200 VAC to 240 VAC 240 VDC for China only
Rated input frequency	50 Hz to 60 Hz
Rated input current	8.7 A at 200 VAC 7.5 A at 230 VAC
Maximum rated input power	1734 W at 200 VAC 1727 W at 230 VAC
BTUs per hour	5918 at 200 VAC 5891 at 230 VAC
Power supply output	—
Rated steady-state power	1600 W at 200 VAC to 240 VAC input 1600 W at 240 VDC input
Maximum peak power	2200 W for 1 ms (turbo mode) at 200 VAC to 240 VAC input

HPE 1600 W Flex Slot -48 VDC Hot-plug Power Supply

Specification	Value
Input requirements	—
Rated input voltage	-40 VDC to -72 VDC
Rated input frequency	DC
Nominal input current	44.2 A DC at -40 VDC input 36.6 A DC at -48 VDC input 24.4 A DC at -72 VDC input
Maximum Rated Input Wattage Rating	1766 W at -40 VDC input 1758 W at -48 VDC input 1755 W at -72 VDC input
BTUs per hour	6026 at -40 VDC input 6000 at -48 VDC input input 5989 at -72 VDC input
Power supply output	—
Rated steady-state power	1600 W at -40 VDC to -72 VDC
Maximum peak power	1600 W at -40 VDC to -72 VDC

Websites

General websites

Single Point of Connectivity Knowledge (SPOCK) Storage compatibility matrix

https://www.hpe.com/storage/spock

Storage white papers and analyst reports

https://www.hpe.com/storage/whitepapers

For additional websites, see Support and other resources.

Product websites

HPE ProLiant DL345 Gen10 Plus Server product page

https://www.hpe.com/servers/dl345-gen10-plus

HPE ProLiant DL345 Gen10 Plus Server user documents

https://www.hpe.com/info/dl345gen10plus-docs

Support and other resources

- Accessing Hewlett Packard Enterprise Support
- Accessing updates
- Remote support
- Warranty information
- Regulatory information
- Documentation feedback

Subtopics

Accessing Hewlett Packard Enterprise Support
Accessing updates
Remote support
Warranty information
Regulatory information
Documentation feedback

Accessing Hewlett Packard Enterprise Support

- For live assistance, go to the Contact Hewlett Packard Enterprise Worldwide website:

  https://www.hpe.com/info/assistance

- To access documentation and support services, go to the Hewlett Packard Enterprise Support Center website:

  https://www.hpe.com/support/hpesc

Information to collect

- Technical support registration number (if applicable)
- Product name, model or version, and serial number
- Operating system name and version
- Firmware version
- Error messages
- Product-specific reports and logs
- Add-on products or components
- Third-party products or components

Accessing updates

- Some software products provide a mechanism for accessing software updates through the product interface. Review your product documentation to identify the recommended software update method.
- To download product updates:

  Hewlett Packard Enterprise Support Center

  https://www.hpe.com/support/hpesc

  Hewlett Packard Enterprise Support Center: Software downloads

  https://www.hpe.com/support/downloads

  My HPE Software Center

  https://www.hpe.com/software/hpesoftwarecenter
- To subscribe to eNewsletters and alerts:

  https://www.hpe.com/support/e-updates
- To view and update your entitlements, and to link your contracts and warranties with your profile, go to the Hewlett Packard Enterprise Support Center More Information on Access to Support Materials page:

  https://www.hpe.com/support/AccessToSupportMaterials

> **IMPORTANT**
>
> Access to some updates might require product entitlement when accessed through the Hewlett Packard Enterprise Support Center. You must have an HPE OnePass set up with relevant entitlements.

Remote support

Remote support is available with supported devices as part of your warranty or contractual support agreement. It provides intelligent event diagnosis, and automatic, secure submission of hardware event notifications to Hewlett Packard Enterprise, which initiates a fast and accurate resolution based on the service level of your product. Hewlett Packard Enterprise strongly recommends that you register your device for remote support.

If your product includes additional remote support details, use search to locate that information.

HPE Get Connected

https://www.hpe.com/services/getconnected

HPE Pointnext Tech Care

https://www.hpe.com/services/techcare

HPE Complete Care

https://www.hpe.com/services/completecare

Warranty information

To view the warranty information for your product, see the links provided below:

HPE ProLiant and IA-32 Servers and Options

https://www.hpe.com/support/ProLiantServers-Warranties

HPE Enterprise and Cloudline Servers

https://www.hpe.com/support/EnterpriseServers-Warranties

HPE Storage Products

https://www.hpe.com/support/Storage-Warranties

HPE Networking Products

https://www.hpe.com/support/Networking-Warranties

Regulatory information

To view the regulatory information for your product, view the Safety and Compliance Information for Server, Storage, Power, Networking, and Rack Products, available at the Hewlett Packard Enterprise Support Center:

https://www.hpe.com/support/Safety-Compliance-EnterpriseProducts

Additional regulatory information

Hewlett Packard Enterprise is committed to providing our customers with information about the chemical substances in our products as needed to comply with legal requirements such as REACH (Regulation EC No 1907/2006 of the European Parliament and the Council). A chemical information report for this product can be found at:

https://www.hpe.com/info/reach

For Hewlett Packard Enterprise product environmental and safety information and compliance data, including RoHS and REACH, see:

https://www.hpe.com/info/ecodata

For Hewlett Packard Enterprise environmental information, including company programs, product recycling, and energy efficiency, see:

https://www.hpe.com/info/environment

Documentation feedback

Hewlett Packard Enterprise is committed to providing documentation that meets your needs. To help us improve the documentation, use the Feedback button and icons (located at the bottom of an opened document) on the Hewlett Packard Enterprise Support Center portal (https://www.hpe.com/support/hpesc) to send any errors, suggestions, or comments. All document information is captured by the process.