Juniper Networks | Engineering Simplicity

Juniper AP45 Access Point Deployment Guide

Published
2024-07-19

Juniper Networks, Inc.
1133 Innovation Way
Sunnyvale, California 94089
USA
408-745-2000
www.juniper.net

Juniper Networks, the Juniper Networks logo, Juniper, and Junos are registered trademarks of Juniper Networks, Inc. in the United States and other countries. All other trademarks, service marks, registered marks, or registered service marks are the property of their respective owners.

Juniper Networks assumes no responsibility for any inaccuracies in this document. Juniper Networks reserves the right to change, modify, transfer, or otherwise revise this publication without notice.

Juniper AP45 Access Point Deployment Guide
Copyright © 2024 Juniper Networks, Inc. All rights reserved.

The information in this document is current as of the date on the title page.

YEAR 2000 NOTICE

Juniper Networks hardware and software products are Year 2000 compliant. Junos OS has no known time-related limitations through the year 2038. However, the NTP application is known to have some difficulty in the year 2036.

END USER LICENSE AGREEMENT

The Juniper Networks product that is the subject of this technical documentation consists of (or is intended for use with) Juniper Networks software. Use of such software is subject to the terms and conditions of the End User License Agreement ("EULA") posted at https://support.juniper.net/support/eula/. By downloading, installing or using such software, you agree to the terms and conditions of that EULA.

Table of Contents

About This Guide | v

1 Overview

AP45 Access Point Overview | 2

AP45 Components and Specifications | 4

Power-On Options for the AP45 | 5

2 Installation

Mount the AP45 Access Point | 7

- Supported Mounting Brackets for AP45 | 8
- Universal Mounting Bracket (APBR-U) for Juniper Access Points | 8
- Mount an Access Point on a Single-Gang or 3.5-Inch or 4-Inch Round Junction Box | 10
- Mount an Access Point on a Double-Gang Junction Box | 12
- Mount an Access Point on an EU Junction Box | 13
- Mount an Access Point on a US 4-Inch Square Junction Box | 15
- Mount an Access Point on a 9/16-Inch or 15/16-Inch T-Bar | 16
- Mount an Access Point on a Recessed 15/16-Inch T-Bar | 17
- Mount an Access Point on a Recessed 9/16-Inch T-Bar or Channel Rail | 19
- Mount an Access Point on a 1.5-Inch T-Bar | 21
- Mount an AP21 or a BT11 on a 5/8-Inch Threaded Rod | 22
- Mount an AP21 or BT11 on a 16-mm Threaded Rod | 24
- Mount an Access Point on a 1/2-Inch Threaded Rod | 26
- Attach External Antennas | 28

Connect an AP45 to the Network and Power It On | 30

3 Troubleshoot

Contact Customer Support | 34

About This Guide

Use this guide to install, manage, and troubleshoot the Juniper® AP45 High-Performance Access Point. After completing the installation procedures covered in this guide, refer to the Juniper Mist™ Wi-Fi Assurance documentation for information about further configuration.

1
CHAPTER

Overview

AP45 Access Point Overview | 2

AP45 Components and Specifications | 4

Power-On Options for the AP45 | 5

AP45 Access Point Overview

IN THIS SECTION

- AP45 Access Point Models | 3
- Benefits of AP45 Access Points | 4

The Juniper® AP45 High Performance Access Point is a Wi-Fi 6E access point (AP) that provides virtual Bluetooth® Low Energy (vBLE) in the 6-GHz band for enterprises that require increased channel width and capacity. The AP45 has four IEEE 802.11ax radios, which deliver up to 4x4 multiple input, multiple output (MIMO) with four spatial streams. Out of the four radios, one is dedicated for scanning. The AP uses this radio for radio resource management (RRM) and wireless security.

The AP45 can operate in either multi-user or single-user mode. The AP45 can operate simultaneously in the 6-GHz, 5-GHz, and 2.4-GHz bands. The AP45 is backward compatible with the 802.11a, 802.11b, 802.11g, 802.11n, and 802.11ac wireless standards.

The AP45 has a 16-element vBLE antenna array. These antennas send out directional beams that ensure precise location accuracy. The Juniper Mist Cloud controls the vBLE antenna array, enabling location services such as asset visibility, wayfinding, and other services without battery-powered beacons

The AP45 provides maximum data rates of 4800 Mbps in the 6-GHz band, 2400 Mbps in the 5-GHz band, and 1148 Mbps in the 2.4-GHz band.

Figure 1: Front and Rear View of AP45



AP45 Access Point Models

AP45 models have either internal or external antennas. "AP45 Access Point Models" on page 3 lists the AP45 models.

Table 1: AP45 Models

Model	Antenna Type	Regulatory Domain
AP45-US	Internal	United States only
AP45E-US	External	United States only
AP45-WW	Internal	Outside of the United States
AP45E-WW	External	Outside of the United States

NOTE: Juniper products are manufactured in accordance with electrical and environmental regulations specific to certain regions and countries. Customers are responsible for ensuring that

any regional or country-specific SKUs are used only in the specified authorized area. Failure to do so may void the warranty of Juniper products.

Benefits of AP45 Access Points

- Simple and quick deployment—You can deploy the AP with minimal manual intervention. The AP automatically connects to the Mist cloud on powering on, downloads its configuration, and connects to the appropriate network. Automatic firmware upgrades ensure that the AP runs the latest firmware version.
- Proactive troubleshooting—The AI-driven Marvis® Virtual Network Assistant leverages the Mist AI to identify issues proactively and provide recommendations to fix the issues. Marvis can identify issues such as offline APs and APs with insufficient capacities and coverage.
- Improved performance through automatic RF optimization—Juniper radio resource management (RRM) automates dynamic channel and power assignment, which helps to reduce interference and enhance user experience. The Mist AI monitors the coverage and capacity metrics and optimizes the RF environment.

AP45 Components and Specifications

Figure 2 on page 4 shows the components on the AP45.

Figure 2: AP45 Components



Table 2: AP45 Components

Component	Description
Reset	A pinhole reset button that you can use to reset the AP configuration to the factory default.
Eth0+PoE	100/1000/2500/5000BASE-T RJ-45 port that supports an 802.3at or 802.3bt PoE-powered device
Eth1	10/100/1000BASE-T RJ-45 port + 802.3af power sourcing equipment (PSE) (if PoE-in is 802.3bt)
USB	USB 2.0 port
Antenna connectors (available only in AP45E models)	Two pluggable antenna connectors: 2.4/5 (4 pin), 6+Scan (6 pin)
Status LED	A multicolor status LED to indicate the status of the AP and to help troubleshoot issues. See *Troubleshoot a Juniper Access Point*.

For AP45 specifications, see the AP45 Datasheet.

Power-On Options for the AP45

You can use any of the following options to power on an AP45:

- Power over Ethernet plus (PoE+) from an Ethernet switch

  We recommend that you use an Ethernet cable with a maximum length of 100 m to connect the access point (AP) to the switch port.

  If you use an Ethernet cable that is longer than 100 m by placing an Ethernet PoE+ extender in the path, the AP might power up, but the Ethernet link does not transmit data across such a long cable. You might see the status LED blink yellow twice. This LED behavior indicates that the AP is unable to receive data from the switch.

- PoE injector

See PoE Requirements for Juniper Mist APs for the power requirements for an AP45.

2
CHAPTER

Installation

Mount the AP45 Access Point | 7

Connect an AP45 to the Network and Power It On | 30

Mount the AP45 Access Point

IN THIS SECTION

- Supported Mounting Brackets for AP45 | 8
- Universal Mounting Bracket (APBR-U) for Juniper Access Points | 8
- Mount an Access Point on a Single-Gang or 3.5-Inch or 4-Inch Round Junction Box | 10
- Mount an Access Point on a Double-Gang Junction Box | 12
- Mount an Access Point on an EU Junction Box | 13
- Mount an Access Point on a US 4-Inch Square Junction Box | 15
- Mount an Access Point on a 9/16-Inch or 15/16-Inch T-Bar | 16
- Mount an Access Point on a Recessed 15/16-Inch T-Bar | 17
- Mount an Access Point on a Recessed 9/16-Inch T-Bar or Channel Rail | 19
- Mount an Access Point on a 1.5-Inch T-Bar | 21
- Mount an AP21 or a BT11 on a 5/8-Inch Threaded Rod | 22
- Mount an AP21 or BT11 on a 16-mm Threaded Rod | 24
- Mount an Access Point on a 1/2-Inch Threaded Rod | 26
- Attach External Antennas | 28

This topic provides the various mounting options for the AP45. You can mount the AP on a wall, ceiling or junction box. The AP ships with a universal mounting bracket that you can use for all mounting options. To mount the AP on a ceiling, you'll need to order an additional adapter based on the type of ceiling.

NOTE: We recommend that you claim your AP before you mount it. The claim code is located on the rear of the AP and it might be difficult to access the claim code after you mount the AP. For information about claiming an AP, see *Claim a Juniper Access Point*.

Supported Mounting Brackets for AP45

Table 3 on page 8 lists the brackets available for the AP45.

Table 3: Mounting Brackets for AP45

Part Number	Description
APBR-U	Universal bracket for t-bar and drywall mounting
APBR-T58	Bracket for mounting the AP on a 5/8-in. threaded rod
APBR-M16	Bracket for mounting the AP on a 16 mm threaded rod
APBR-ADP-CR9	Bracket adapter for mounting the AP on a recessed 9/16-in. t-bar or channel rail
APBR-ADP-RT15	Bracket adapter for mounting the AP on a recessed 15/16-in. t-bar
APBR-ADP-WS15	Bracket adapter for mounting the AP on a recessed 1.5-in. t-bar

NOTE: Juniper APs ship with the universal bracket APBR-U. If you need other brackets, you must order them separately.

Universal Mounting Bracket (APBR-U) for Juniper Access Points

You use the universal mounting bracket APBR-U for all types of mounting options—for example, on a wall, a ceiling, or a junction box. Figure 3 on page 9 shows the APBR-U. You'll need to use the numbered holes to insert screws when mounting the AP on a junction box. The numbered holes that you use vary based on the type of junction box.

Figure 3: Universal Mounting Bracket (APBR-U) for Juniper Access Points

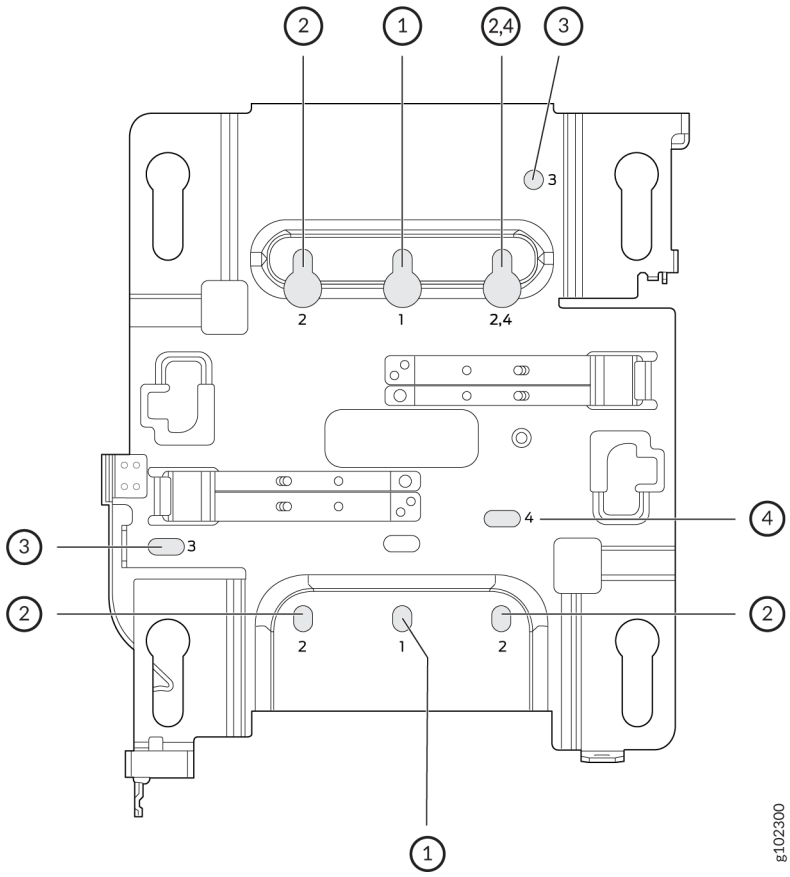

If you're mounting the AP on a wall, use screws with the following specifications:

- Diameter of the screw head: ¼ in. (6.3 mm)
- Length: At least 2 in. (50.8 mm)

The following table lists the bracket holes that you need to use for specific mounting options.

Hole Number	Mounting Option
1	• US single-gang junction box • 3.5 in. round junction box • 4 in. round junction box

(Continued)

Hole Number	Mounting Option
2	• US double-gang junction box • Wall • Ceiling
3	• US 4-in. square junction box
4	• EU junction box



Video: Attach the APBR-U Universal Mounting Bracket to an AP

Mount an Access Point on a Single-Gang or 3.5-Inch or 4-Inch Round Junction Box

You can mount an access point (AP) on a US single-gang or a 3.5-in. or 4-in. round junction box by using the universal mounting bracket (APBR-U) that we ship along with the AP. To mount an AP on a single-gang junction box:

1. Attach the mounting bracket to the single-gang junction box by using two screws. Ensure that you insert the screws in the holes marked 1 as shown in Figure 4 on page 11.

Figure 4: Attach the APBR-U Mounting Bracket to the Single-Gang Junction Box

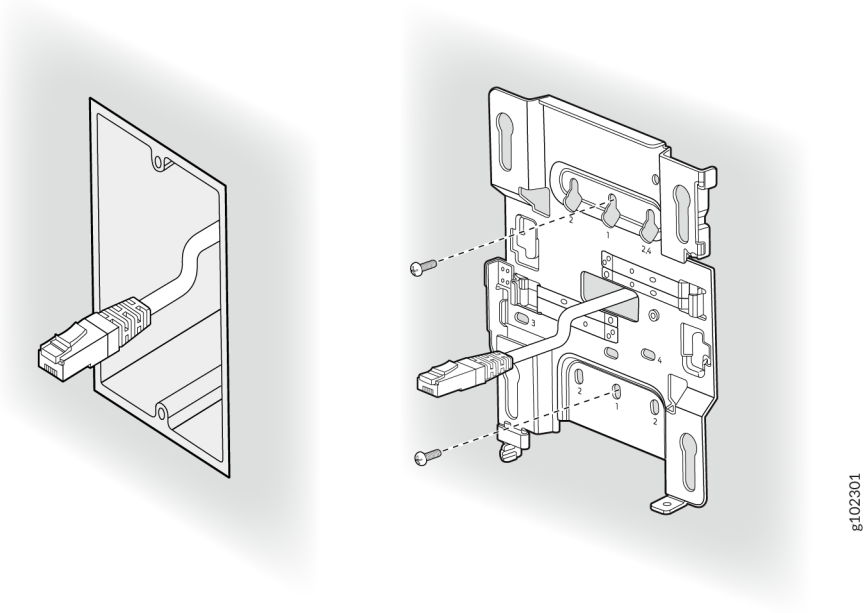

2. Extend the Ethernet cable through the bracket.
3. Position the AP such that the shoulder screws on the AP engage with the keyholes of the mounting bracket. Slide and lock the AP in place.

Figure 5: Mount the AP on the Single-Gang Junction Box

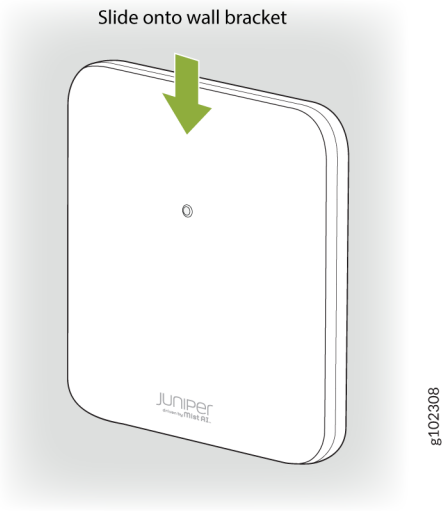

Video: Mounting an AP on a US Single-Gang Junction Box

Video: Mounting an AP on a US 3.5-Inch or 4-inch Round Junction Box

Mount an Access Point on a Double-Gang Junction Box

You can mount an access point (AP) on a double-gang junction box by using the universal mounting bracket (APBR-U) that we ship along with the AP. To mount an AP on a double-gang junction box:

1. Attach the mounting bracket to the double-gang junction box by using four screws. Ensure that you insert the screws in the holes marked 2 as shown in Figure 6 on page 12.

Figure 6: Attach the APBR-U Mounting Bracket to the Double-Gang Junction Box

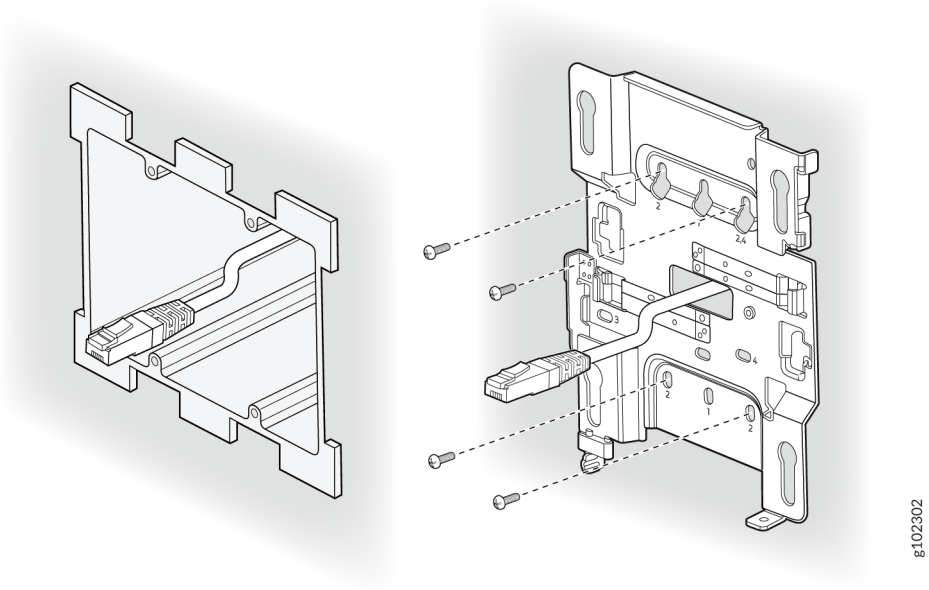

2. Extend the Ethernet cable through the bracket.
3. Position the AP such that the shoulder screws on the AP engage with the keyholes of the mounting bracket. Slide and lock the AP in place.

Figure 7: Mount the AP on the Double-Gang Junction Box

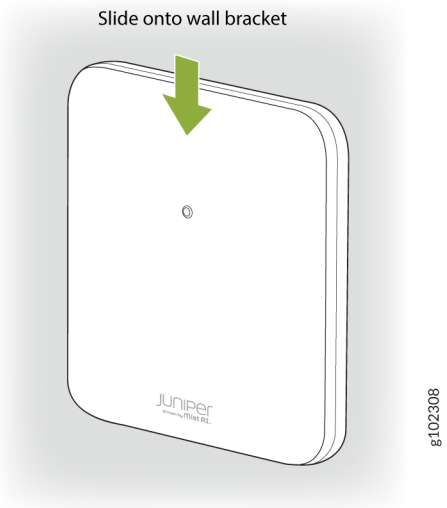

Video: Mounting an AP on a US Double-Gang Junction Box

Mount an Access Point on an EU Junction Box

You can mount an access point (AP) on an EU junction box by using the universal mounting bracket (APBR-U) that ships with the AP. To mount an AP on an EU junction box:

1. Attach the mounting bracket to the EU junction box by using two screws. Ensure that you insert the screws in the holes marked 4 as shown in Figure 8 on page 14.

Figure 8: Attach the APBR-U Mounting Bracket to an EU Junction Box

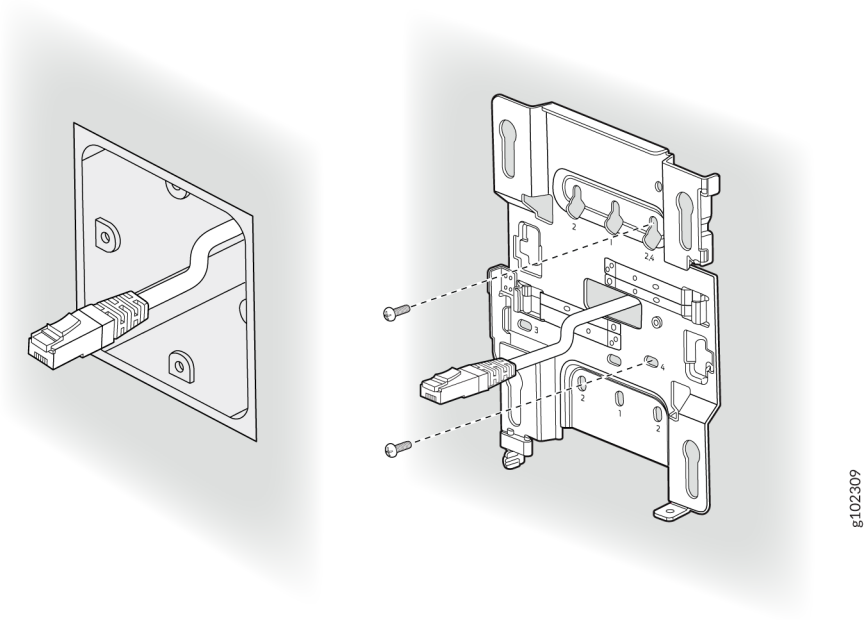

2. Extend the Ethernet cable through the bracket.
3. Position the AP such that the shoulder screws on the AP engage with the keyholes of the mounting bracket. Slide and lock the AP in place.

Figure 9: Mount an Access Point on an EU Junction Box

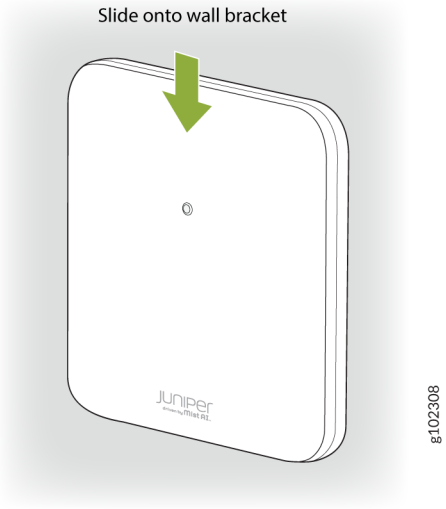

Mount an Access Point on a US 4-Inch Square Junction Box

To mount an access point (AP) on a US 4-in. square junction box:

1. Attach the mounting bracket to the 4-in. square junction box by using two screws. Ensure that you insert the screws in the holes marked 3 as shown in Figure 10 on page 15.

Figure 10: Attach the Mounting Bracket (APBR-U) to a US 4-Inch Square Junction Box

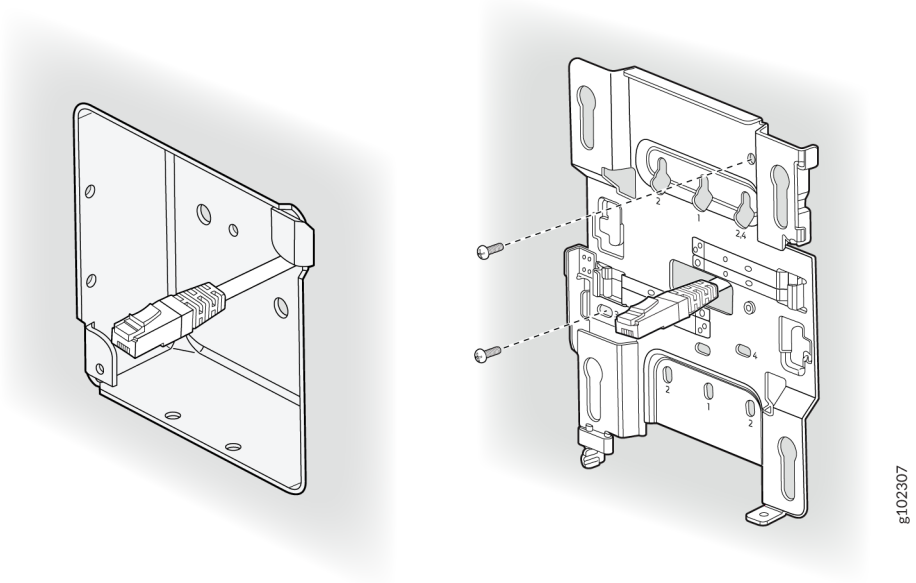

2. Extend the Ethernet cable through the bracket.
3. Position the AP such that the shoulder screws on the AP engage with the keyholes of the mounting bracket. Slide and lock the AP in place.

Figure 11: Mount the AP on a US 4-Inch Square Junction Box

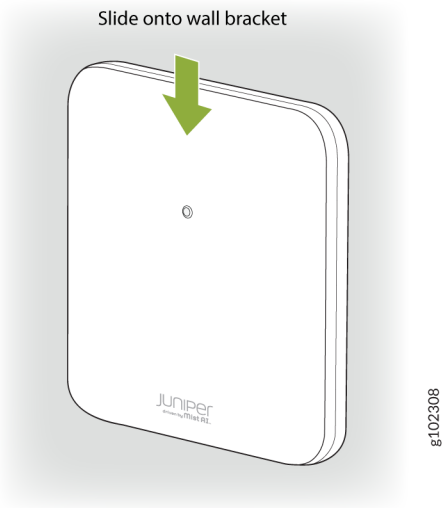

Video: Mounting an AP on a US 4-Inch Square Junction Box

Mount an Access Point on a 9/16-Inch or 15/16-Inch T-Bar

To mount an access point (AP) on a 9/16-in. or 15/16-in. ceiling T-bar:

1. Attach the universal mounting bracket (APBR-U) to the T-bar.

Figure 12: Attach the Mounting Bracket (APBR-U) to a 9/16-in. or 15/16-in. T-Bar

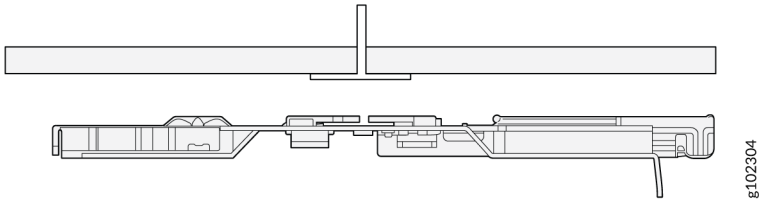

2. Rotate the bracket until you hear a distinct click, which indicates that the bracket is locked in place.

Figure 13: Lock the Mounting Bracket (APBR-U) to a 9/16-in. or 15/16-in. T-Bar

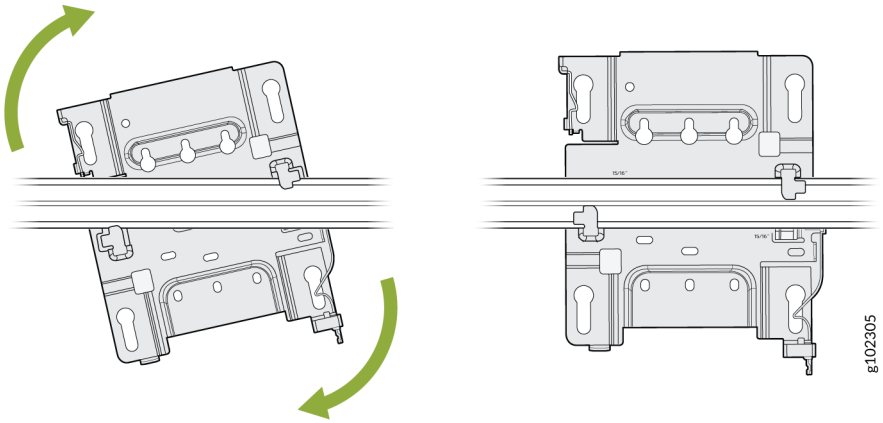

3. Position the AP such that the keyholes of the mounting bracket engage with the shoulder screws on the AP. Slide and lock the AP in place.

Figure 14: Attach the AP to a 9/16-in. or 15/16-in. T-Bar

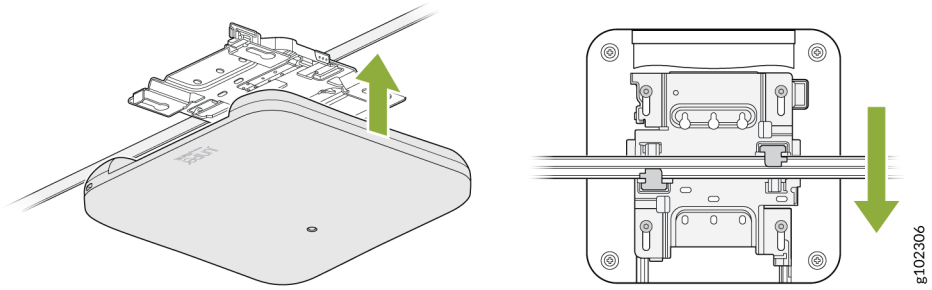

Video: Mount an AP on a 9/16ths-Inch or 15/16ths-Inch T-Bar

Mount an Access Point on a Recessed 15/16-Inch T-Bar

You'll need to use an adapter (ADPR-ADP-RT15) along with the mounting bracket (APBR-U) to mount an access point (AP) on a recessed 15/16-in. ceiling T-bar. You need to order the ADPR-ADP-RT15 adapter separately.

1. Attach the ADPR-ADP-RT15 adapter to the T-bar.

Figure 15: Attach the ADPR-ADP-RT15 Adapter to the T-Bar

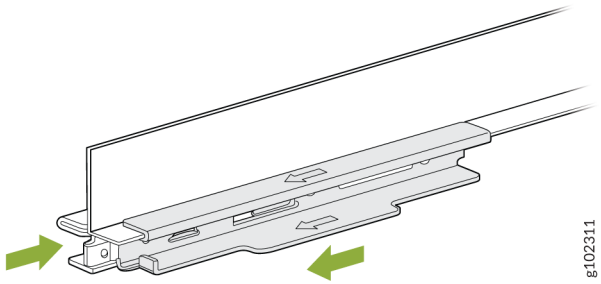

2. Attach the universal mounting bracket (APBR-U) to the adapter. Rotate the bracket until you hear a distinct click, which indicates that the bracket is locked in place.

Figure 16: Attach the Mounting Bracket (APBR-U) to the ADPR-ADP-RT15 Adapter

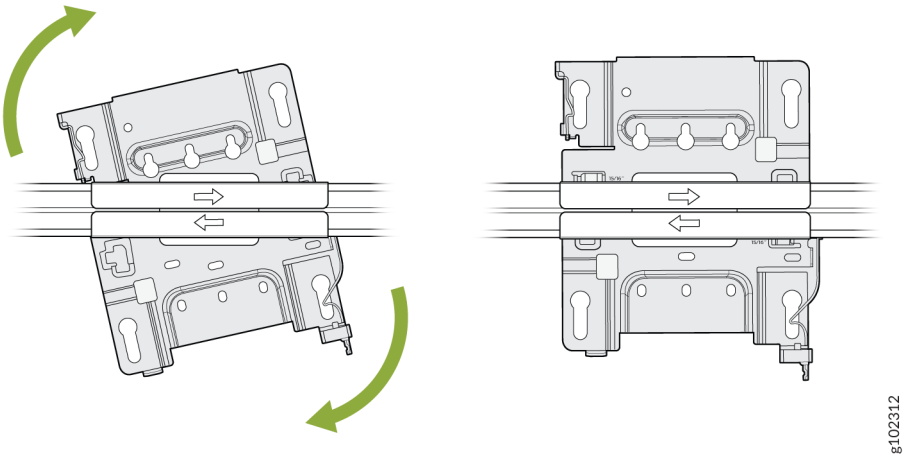

3. Position the AP such that the keyholes of the mounting bracket engage with the shoulder screws on the AP. Slide and lock the AP in place.

Figure 17: Attach the AP to a Recessed 15/16-Inch T-Bar

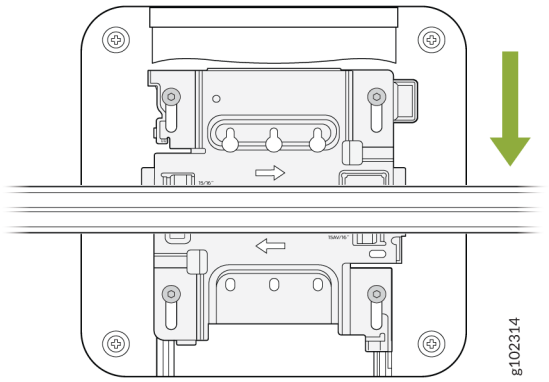

Mount an Access Point on a Recessed 9/16-Inch T-Bar or Channel Rail

To mount an access point (AP) on a recessed 9/16-in. ceiling T-bar, you'll need to use the ADPR-ADP-CR9 adapter along with the mounting bracket (APBR-U).

1. Attach the ADPR-ADP-CR9 adapter to the T-bar or channel rail.

Figure 18: Attach the ADPR-ADP-CR9 Adapter to a Recessed 9/16-Inch T-Bar

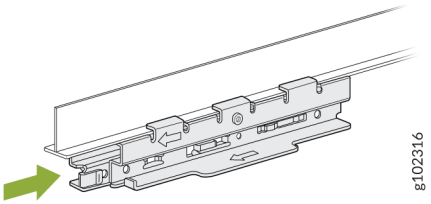

Figure 19: Attach the ADPR-ADP-CR9 Adapter to a Recessed 9/16-Inch Channel Rail

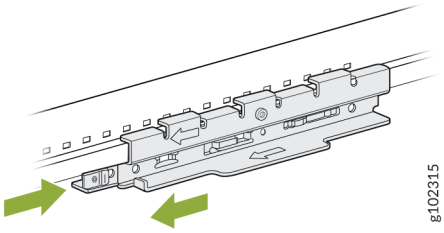

2. Attach the universal mounting bracket (APBR-U) to the adapter. Rotate the bracket until you hear a distinct click, which indicates that the bracket is locked in place.

Figure 20: Attach the APBR-U Mounting Bracket to the ADPR-ADP-CR9 Adapter

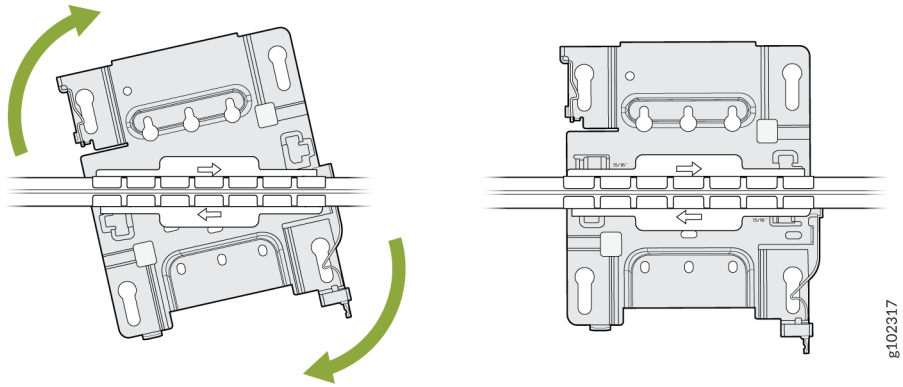

3. Position the AP such that the keyholes of the mounting bracket engage with the shoulder screws on the AP. Slide and lock the AP in place.

Figure 21: Attach the AP to a Recessed 9/16-in. T-Bar or Channel Rail

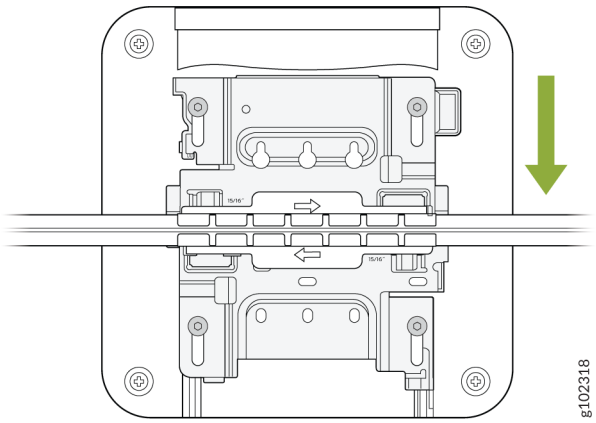

Video: Mount an AP on a Recessed Channel or T-Bar

Mount an Access Point on a 1.5-Inch T-Bar

To mount an access point (AP) on a 1.5-in. ceiling T-bar, you'll need the ADPR-ADP-WS15 adapter. You need to order the adapter separately.

1. Attach the ADPR-ADP-WS15 adapter to the T-bar.

Figure 22: Attach the ADPR-ADP-WS15 Adapter to a 1.5-Inch T-Bar

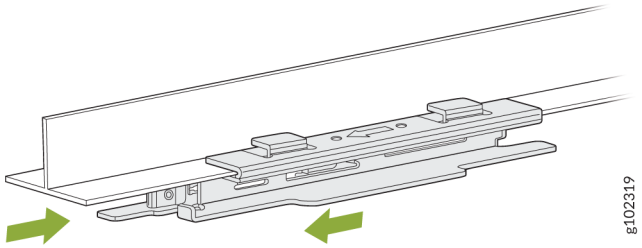

2. Attach the universal mounting bracket (APBR-U) to the adapter. Rotate the bracket until you hear a distinct click, which indicates that the bracket is locked in place.

Figure 23: Attach the APBR-U Mounting Bracket to the ADPR-ADP-WS15 Adapter

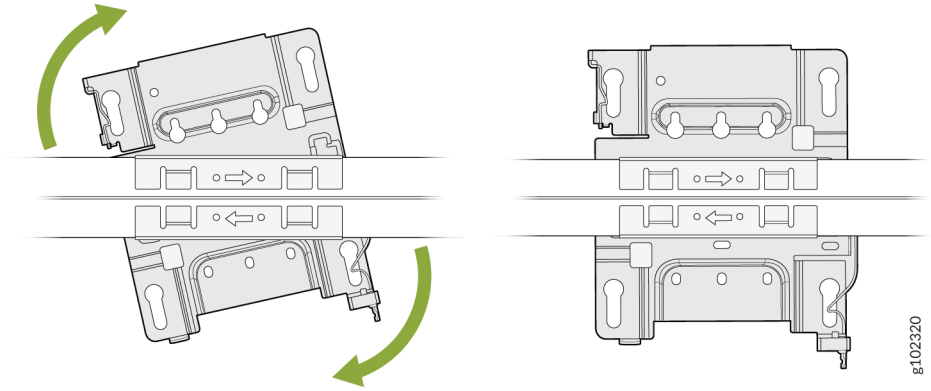

3. Position the AP such that the keyholes of the mounting bracket engage with the shoulder screws on the AP. Slide and lock the AP in place.

Figure 24: Attach the AP to a 1.5-Inch T-Bar

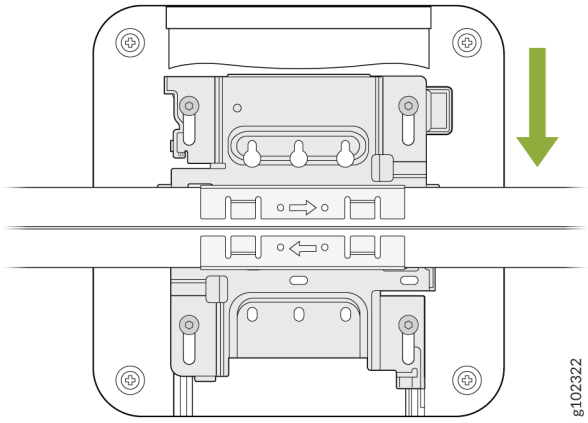

Mount an AP21 or a BT11 on a 5/8-Inch Threaded Rod

To mount an AP21 or a BT11 on a 5/8-in. threaded rod, you'll need to use the APBR-T58 bracket. that you'll need to order separately.

1. Attach the APBR-T58 bracket to the threaded rod by using the lock washer and nut provided.

Figure 25: Attach the APBR-T58 Bracket to a 5/8-in. Threaded Rod

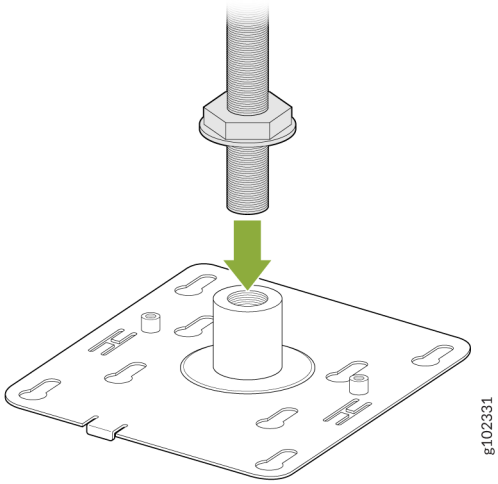

2. Attach the APBR-SW1 bracket adapter to the APBR-T58 mounting bracket using two screws (provided with the AP).

Figure 26: Attach the APBR-SW1 Bracket Adapter to the APBR-T58 Mounting Bracket

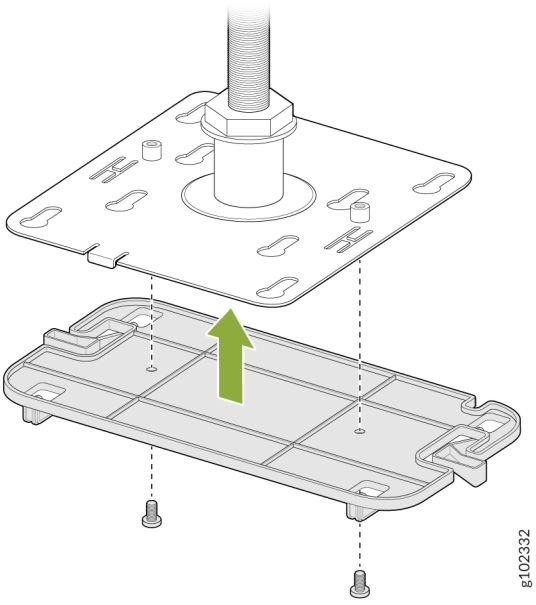

3. Position the AP such that the shoulder screws on the AP engage with the keyholes of the mounting bracket. Slide and lock the AP in place.

Figure 27: Mount the AP on a 5/8-in. Threaded Rod

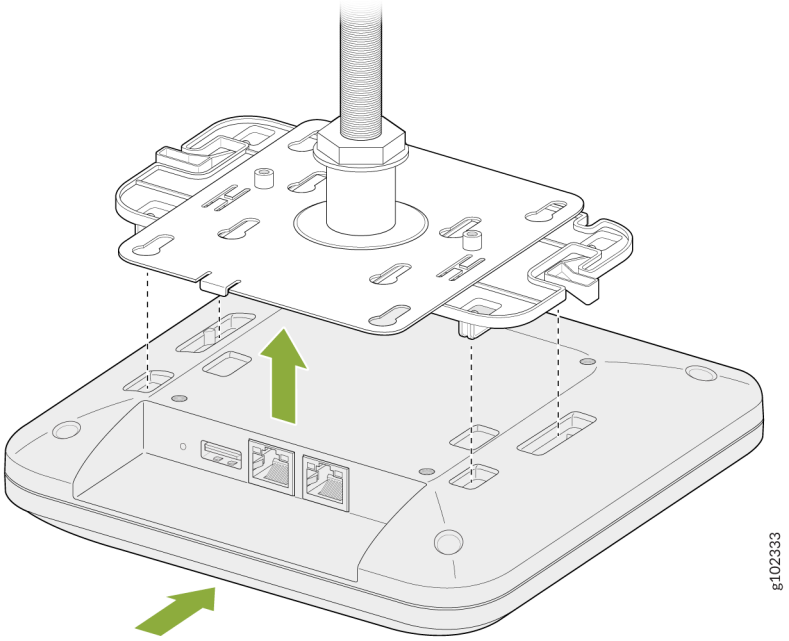

Video: Mount a BT11 Access Point

Mount an AP21 or BT11 on a 16-mm Threaded Rod

To mount an access point (AP) on a 16-mm threaded rod, you'll need the APBR-M16 bracket.

1. Attach the APBR-M16 bracket to the threaded rod by using the lock washer and nut provided.

Figure 28: Attach the APBR-T58 Bracket to a 16-mm Threaded Rod

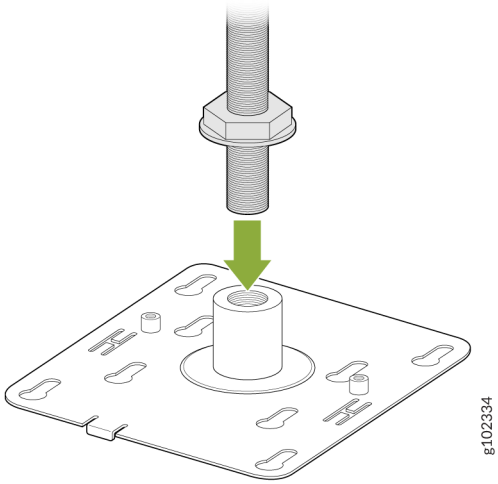

2. Attach the APBR-SW1 bracket adapter to the APBR-M16 mounting bracket using two screws (provided with the AP).

Figure 29: Attach the APBR-SW1 Bracket Adapter to the APBR-M16 Mounting Bracket

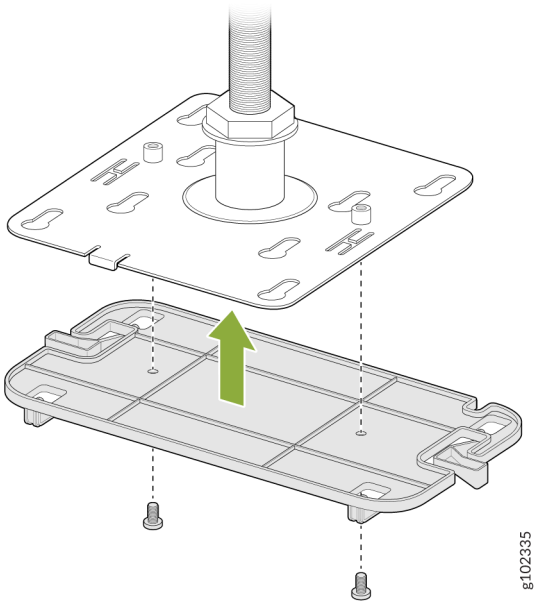

3. Position the AP such that the shoulder screws on the AP engage with the keyholes of the mounting bracket. Slide and lock the AP in place.

Figure 30: Mount the AP21 or BT11 on a 16-mm Threaded Rod

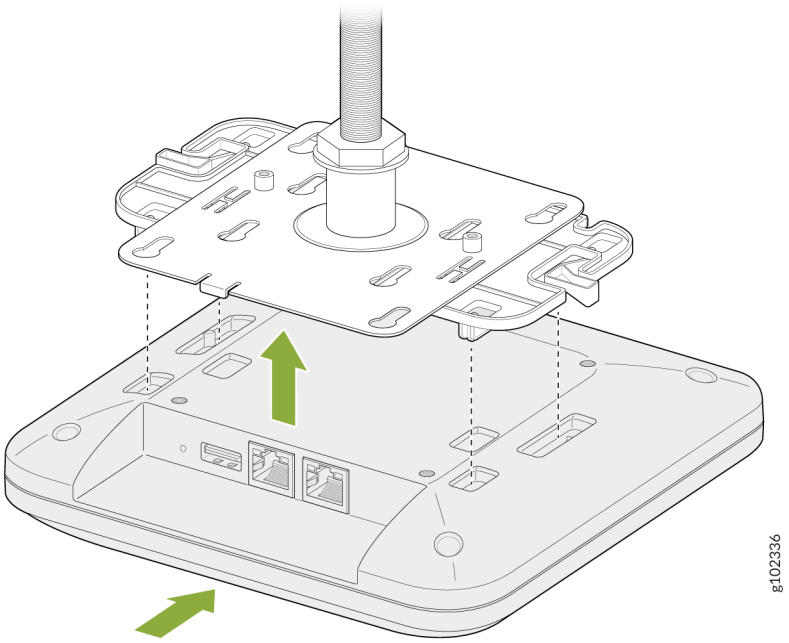

Mount an Access Point on a 1/2-Inch Threaded Rod

To mount an access point (AP) on a 1/2-in. threaded rod, you'll need to use the APBR-ADP-T12 bracket adapter and the universal mounting bracket APBR-U.

1. Attach the APBR-ADP-T12 bracket adapter to the APBR-U mounting bracket. Rotate the bracket until you hear a distinct click, which indicates that the bracket is locked in place.

Figure 31: Attach the APBR-ADP-T12 Bracket Adapter to the APBR-U Mounting Bracket

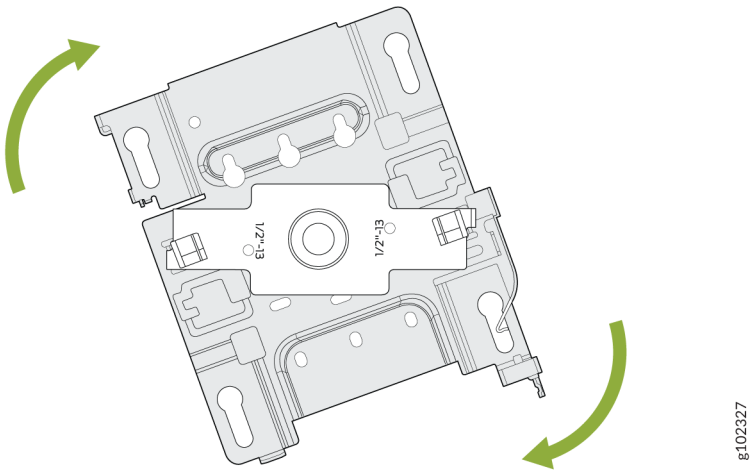

2. Secure the adapter to the bracket using a screw.

Figure 32: Secure the APBR-ADP-T12 Bracket Adapter to the APBR-U Mounting Bracket

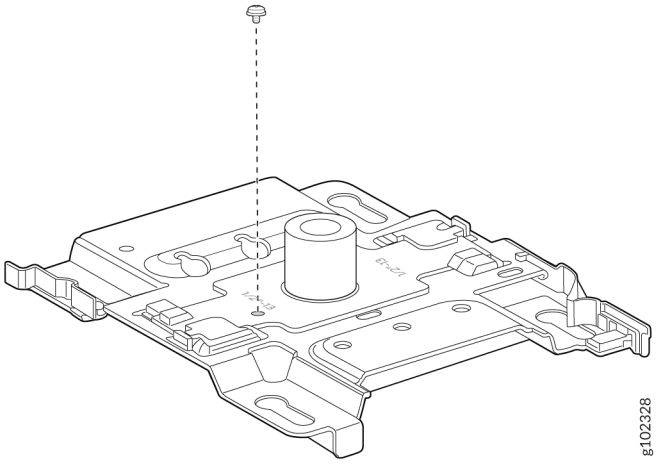

3. Attach the bracket assembly (bracket and adapter) to the ½-in. threaded rod by using the lock washer and nut provided

Figure 33: Attach the APBR-ADP-T12 and APBR-U Bracket Assembly to the ½-Inch Threaded Rod

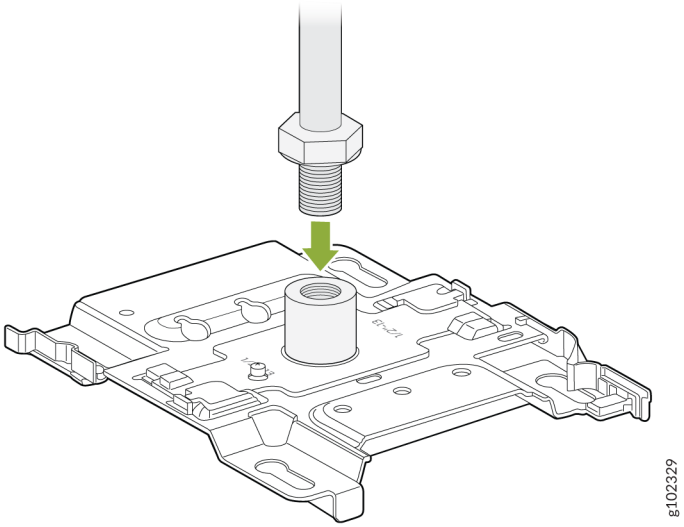

4. Position the AP such that the shoulder screws on the AP engage with the keyholes of the mounting bracket. Slide and lock the AP in place.

Figure 34: Mount the AP on a 1/2-in. Threaded Rod

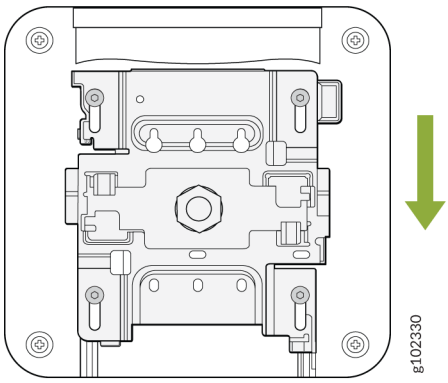

Attach External Antennas

The AP45E model has two pluggable antenna ports, 6-pin and 4-pin.
To attach the antennas:

1. Use a T8 security torx bit to remove the screws that attach the antenna port cover to the AP. Remove the cover.

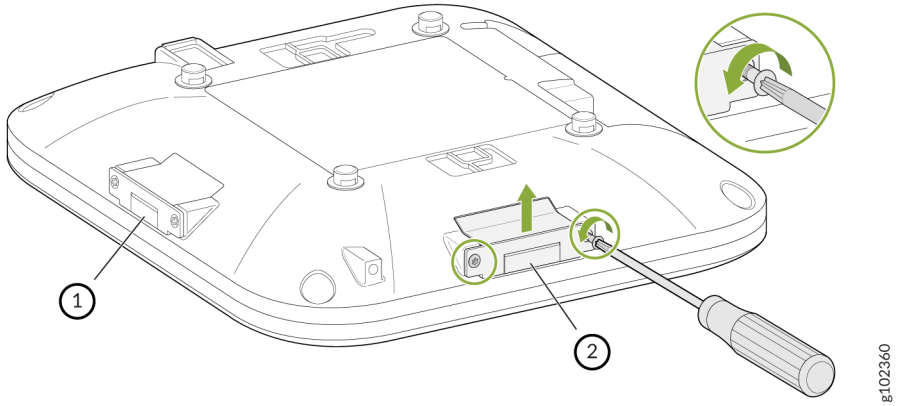

2. Connect the antennas.

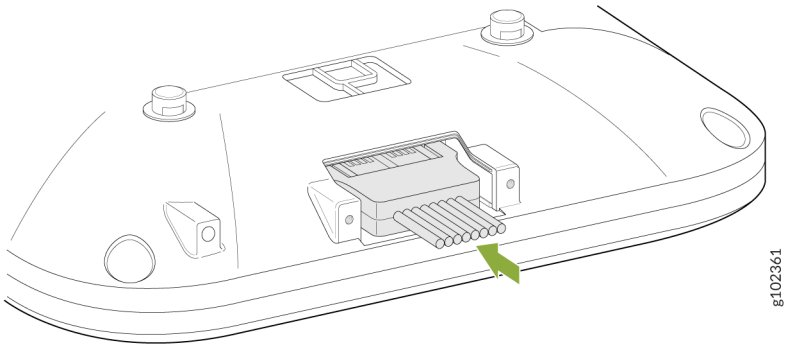

3. Bend the breakoff tab on the antenna port cover.

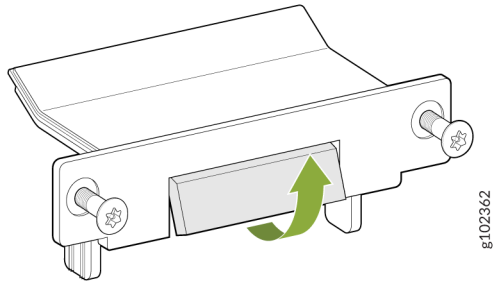

4. Attach the antenna port cover to the AP using the screws that you removed in Step 1. Use the T8 security torx bit to tighten the screws.

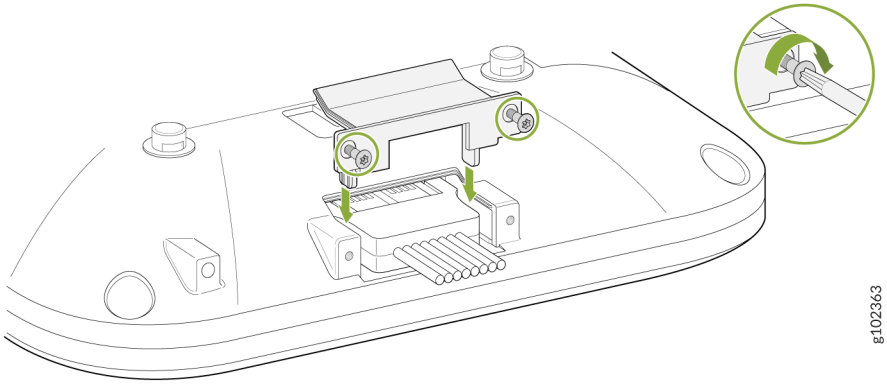

5. Add a few drops of the provided glue on the antenna port cover screws. Place the provided lexan labels on the screws.

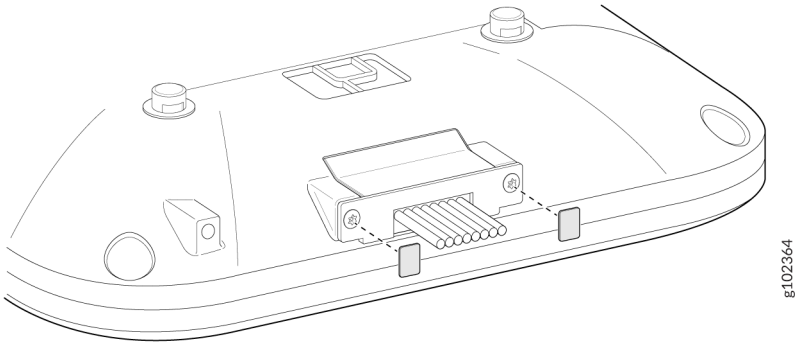

Connect an AP45 to the Network and Power It On

When you power on an AP and connect it to the network, the AP is automatically onboarded to the Juniper Mist cloud. The AP onboarding process involves the following steps:

- When you power on an AP, the AP obtains an IP address from the DHCP server on the untagged VLAN.
- The AP performs a Domain Name System (DNS) lookup to resolve the Juniper Mist cloud URL. See Firewall Configuration for the specific cloud URLs.
- The AP establishes a HTTPS session with the Juniper Mist cloud for management.
- The Mist cloud then provisions the AP by pushing the required configuration after the AP is assigned to a site.

To ensure that your AP has access to the Juniper Mist cloud, ensure that the required ports on your Internet firewall are open. See Firewall Configuration.

To connect the AP to the network:

1. Connect an Ethernet cable from a switch to the **Eth0+PoE** port on the AP.

   For information on power requirements, see PoE Requirements for Juniper Mist APs.

   > **NOTE**: If you are setting up the AP in a home setup where you have a modem and a wireless router, do not connect the AP directly to your modem. Connect the **Eth0+PoE** port on the AP to one of the LAN ports on the wireless router. The router provides DHCP services, which enables wired and wireless devices on your local LAN to get IP addresses and connect to the Mist cloud. An AP connected to a modem port connects to the Mist cloud but does not provide any services.
   >
   > The same guideline applies if you have a modem/router combo. Connect the **Eth0+PoE** port on the AP to one of the LAN ports.

   If the switch or router that you connect to the AP is not PoE capable, use an 802.3at or 802.3bt power injector. You can use an 802.3at power injector such as PD-9001GR/AT/AC.

   - Connect an Ethernet cable from the switch to the **data in** port on the power injector.
   - Connect an Ethernet cable from the **data out** port on the power injector to the **Eth0+PoE** port on the AP.

2. Wait for a few minutes for the AP to boot completely.
   When the AP connects to the Juniper Mist portal, the LED on the AP turns green, which indicates that the AP is connected and onboarded to the Juniper Mist cloud.

   After you've onboarded the AP, you can configure the AP according to your network and requirements. See the Juniper Mist Wireless Configuration Guide and Location Services Guide to configure your AP.

   A few things to keep in mind about your AP:

   - When an AP boots for the first time, it sends a Dynamic Host Configuration Protocol (DHCP) request on the trunk port or native VLAN. You can reconfigure the AP to assign it to a different VLAN after you've onboarded the AP (that is, the AP state shows as Connected in the Juniper Mist portal. Ensure that you reassign the AP to a valid VLAN because, on rebooting, the AP sends DHCP requests only on that VLAN. If you connect the AP to a port on which the VLAN doesn't exist, Mist displays a **No IP address found** error.
   - We recommend that you avoid using a static IP address on an AP. The AP uses the configured static information whenever it reboots, and you cannot reconfigure the AP until it connects to the network. If you need to correct the IP address, you'll need to reset the AP to the factory-default configuration.

If you must use a static IP address, we recommend that you use a DHCP IP address during the initial setup. Before assigning a static IP address, ensure that:

- You've reserved the static IP address for the AP.
- The switch port can reach the static IP address.

3

CHAPTER

Troubleshoot

Contact Customer Support | 34

Contact Customer Support

If your access point (AP) is not working correctly, see *Troubleshoot a Juniper Access Point* to troubleshoot the issue. If you are unable to resolve the issue, you can create a support ticket on the Juniper Mist portal. The Juniper Mist Support team will contact you to help resolve your problem. If needed, you can request a Return Material Authorization (RMA).

Before you begin, ensure that you have the following information:

- The MAC address of the faulty AP
- The exact LED blink pattern seen on the AP (or a short video of the blinking pattern)
- The system logs from the AP

To create a support ticket:

1. Click the **?** (question mark) icon in the top-right corner of the Juniper Mist portal.
2. Select **Support Tickets** from the drop-down menu.

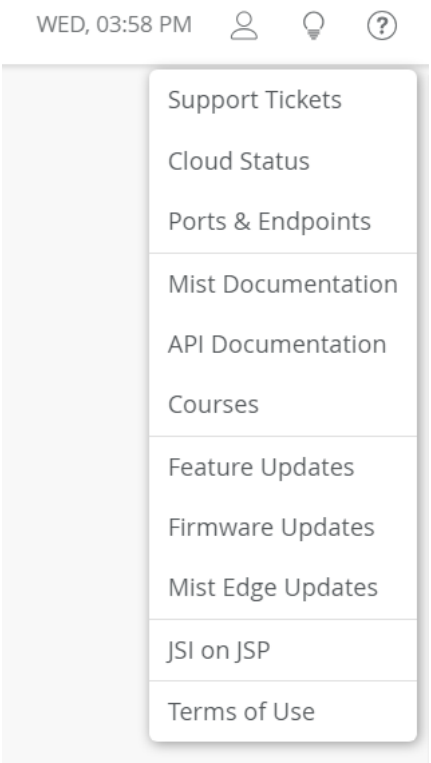

3. Click **Create a Ticket** in the top-right corner of the **Support Tickets** page.

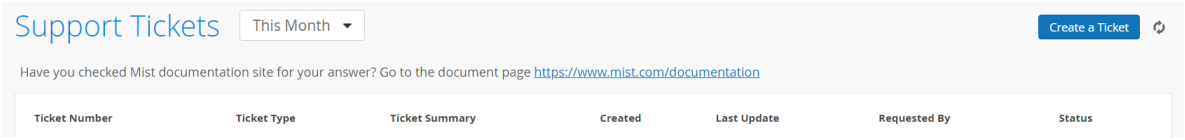

4. Select the appropriate ticket type depending on the severity of your problem.

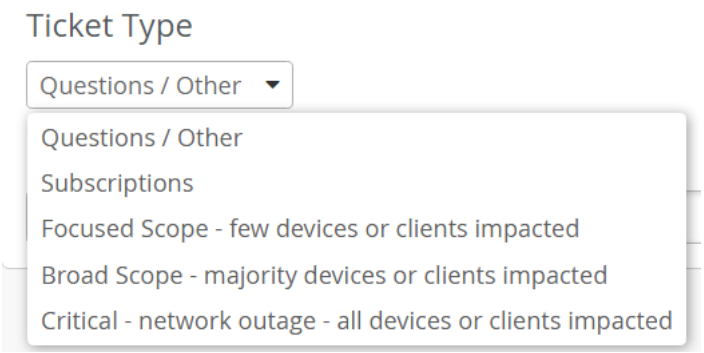

NOTE: Selecting **Questions/Other** will open a search box and redirect you to available documentation and resources related to your issue. If you cannot resolve your issue by using the suggested resources, click **I still need to create a ticket**.

5. Enter a ticket summary, and select the sites, devices, or clients that are impacted.

   If you are requesting an RMA, select the impacted device.

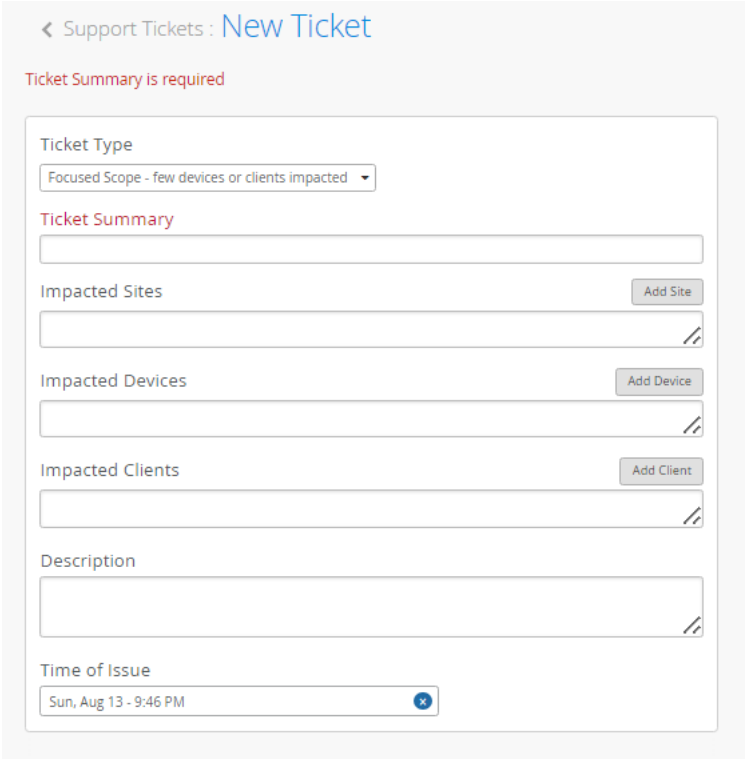

6. Enter a description to explain the issue in detail.

   Provide the following information:

   - The MAC address of the device
   - The exact LED blink pattern seen on the device
   - The system logs from the device

   NOTE: To share device logs:

   a. Navigate to the **Access Points** page in the Juniper Mist portal. Click the impacted device.

   b. Select **Utilities** > **Send AP Log to Mist** in the top right corner of the device page.

   It takes at least 30 seconds to 1 minute to send the logs. Do not reboot your device in that interval.

7. (Optional) You can provide any additional information that may help to resolve the issue, such as:
   - Is the device visible on the connected switch?
   - Is the device receiving power from the switch?
   - Is the device receiving an IP address?
   - Is the device pinging on the Layer 3 (L3) gateway of your network?
   - Have you already followed any troubleshooting steps?
8. Click **Submit**.