Lenovo

ThinkSystem SR650 V4
Hardware Maintenance Guide



Machine Types: 7DGC, 7DGD, 7DGE, 7DGF, 7DLN, 7DK2

Note

Before using this information and the product it supports, be sure to read and understand the safety information and the safety instructions, which are available at:
https://pubs.lenovo.com/safety_documentation/

In addition, be sure that you are familiar with the terms and conditions of the Lenovo warranty for your server, which can be found at:
http://datacentersupport.lenovo.com/warrantylookup

Third Edition (June 2025)

© Copyright Lenovo 2025.

LIMITED AND RESTRICTED RIGHTS NOTICE: If data or software is delivered pursuant to a General Services Administration (GSA) contract, use, reproduction, or disclosure is subject to restrictions set forth in Contract No. GS-35F-05925.

Contents

Contents i

Safety v

Safety inspection checklist vi

Chapter 1. Hardware replacement procedures 1

Installation Guidelines 1
- Safety inspection checklist. 2
- System reliability guidelines 3
- Working inside the server with the power on . . . 4
- Handling static-sensitive devices 4

Technical rules 4
- Memory module installation rules and order . . . 5
- PCIe slots and PCIe adapters 12
- Thermal rules 17

Multi-server configurations 23

Power on and power off the server 27
- Power on the server 27
- Power off the server 27

Rail replacement 27
- Remove the rails from the rack 28
- Install the rails to the rack 29

Server replacement 34
- Remove the server from the rack (friction rails) 34
- Install the server to the rack (friction rails) . . . 38
- Remove the server from the rack (slide rails) . . 43
- Install the server to the rack (slide rails) 46

2.5-inch or 3.5-inch hot-swap drive replacement . . 50
- Remove a 2.5-inch or 3.5-inch hot-swap drive 50
- Install a 2.5-inch or 3.5-inch hot-swap drive . . 52

Air baffle replacement 53
- Remove the air baffle 54
- Install the air baffle 56

Cable wall replacement 58
- Remove the cable walls 59
- Install the cable walls 61

CMOS battery (CR2032) replacement 62
- Remove the CMOS battery (CR2032) 62
- Install the CMOS battery (CR2032) 64

E3.S non-hot-swap CMM replacement. 66
- Remove an E3.S non-hot-swap CMM 66
- Install an E3.S non-hot-swap CMM 68

E3.S CMM cage and backplane replacement . . . 72
- Remove an E3.S CMM cage and backplane . . 72
- Install an E3.S CMM cage and backplane . . . 74

E3.S hot-swap drive replacement 75
- Remove an E3.S hot-swap drive 75
- Install an E3.S hot-swap drive 77

E3.S drive cage and backplane replacement . . . 81
- Remove an E3.S drive cage and backplane . . 81
- Install an E3.S drive cage and backplane . . . 83

Front drive backplane replacement 85
- Remove the front drive backplane 85
- Install the front drive backplane 87

GPU replacement 90
- Remove a GPU adapter 92
- Install a GPU adapter 95

Heat sink Torx T30 nut replacement 98
- Remove a heat sink Torx T30 nut 98
- Install a heat sink Torx T30 nut 99

Internal CFF adapter replacement. 101
- Remove an internal CFF adapter 101
- Install an internal CFF adapter 102

Internal M.2 drive and M.2 backplane replacement 104
- Remove an M.2 drive 104
- Install an M.2 drive 105
- Remove the M.2 backplane 107
- Install the M.2 backplane 110

Intrusion switch replacement 113
- Remove the intrusion switch 113
- Install the intrusion switch 115

Lenovo Compute Complex Neptune Core Module replacement (trained technicians only) 116
- Remove the Lenovo Compute Complex Neptune Core Module 116
- Install the Lenovo Compute Complex Neptune Core Module 121

Lenovo Processor Neptune Core Module replacement (trained technicians only) 130
- Remove the Lenovo Processor Neptune Core Module 130
- Install the Lenovo Processor Neptune Core Module 134

Hot-swap M.2 drive assembly replacement 143
- Remove a hot-swap M.2 drive assembly . . . 143
- Install a hot-swap M.2 drive assembly 144
- Disassemble an M.2 drive assembly 146
- Assemble an M.2 drive assembly 150

M.2 drive cage and drive backplanes replacement 153

© Copyright Lenovo 2025

Remove the front M.2 drive cage and drive backplanes . . . 153
Install the front M.2 drive cage and drive backplanes . . . 157
Remove the rear M.2 riser cage and drive backplane . . . 161
Install the rear M.2 riser cage and drive backplane . . . 163
Management NIC adapter replacement . . . 164
Remove the management NIC adapter . . . 165
Install the management NIC adapter . . . 166
Manifold replacement (trained technicians only) . . . 167
Remove the manifold (in-rack system) . . . 169
Install the manifold (in-rack system) . . . 176
Remove the manifold (in-row system) . . . 188
Install the manifold (in-row system) . . . 197
Memory module replacement . . . 209
Remove a memory module . . . 209
Install a memory module . . . 212
MicroSD card replacement . . . 216
Remove the MicroSD card . . . 216
Install the MicroSD card . . . 217
Middle drive cage and drive backplane replacement . . . 219
Remove the middle drive cage and drive backplane . . . 219
Install the middle drive backplane and drive cage . . . 221
Power supply unit replacement . . . 223
Remove a power supply unit . . . 223
Install a power supply unit . . . 229
Processor and heat sink replacement (trained technician only) . . . 236
Remove a processor and heat sink . . . 236
Separate the processor from carrier and heat sink . . . 240
Install a processor and heat sink . . . 242
Rack latches replacement . . . 250
Remove the rack latches . . . 250
Install the rack latches . . . 252
RAID flash power module replacement . . . 254
Remove a RAID flash power module from the air baffle . . . 255
Install a RAID flash power module on the air baffle . . . 256
Remove a RAID flash power module from the middle drive cage . . . 258
Install a RAID flash power module on the middle drive cage . . . 259
Rearwall bracket replacement . . . 262
Remove a rearwall bracket . . . 263
Install a rearwall bracket . . . 265
Rear drive backplane replacement . . . 267
Remove the rear drive backplane . . . 267
Install the rear drive backplane . . . 269
Rear drive cage replacement . . . 271
Remove the 4 x 2.5" rear drive cage . . . 272
Install the 4 x 2.5" rear drive cage . . . 273
Remove the 8 x 2.5" rear drive cage . . . 275
Install the 8 x 2.5" rear drive cage . . . 277
Remove the 4 x 3.5" rear drive cage . . . 280
Install the 4 x 3.5" rear drive cage . . . 281
Rear OCP module replacement . . . 286
Remove the rear OCP module . . . 286
Install the rear OCP module . . . 287
Rear riser assembly and PCIe adapter replacement . . . 289
Remove a rear riser assembly . . . 291
Remove a rear PCIe adapter and riser card . . . 294
Install a rear PCIe adapter and riser card . . . 298
Install a rear riser assembly . . . 302
Security bezel replacement . . . 304
Remove the security bezel . . . 304
Install the security bezel . . . 306
Serial port module replacement . . . 308
Remove a serial port module . . . 308
Install a serial port module . . . 310
System board assembly replacement (trained technician only) . . . 312
System I/O board replacement (trained technicians only) . . . 314
Processor board replacement (trained technicians only) . . . 322
System fan replacement . . . 329
Remove a system fan . . . 329
Install a system fan . . . 331
System fan cage replacement . . . 333
Remove the system fan cage . . . 333
Install the system fan cage . . . 334
Top cover replacement . . . 335
Remove the top cover . . . 335
Install the top cover . . . 337
USB I/O board replacement . . . 338
Remove the USB I/O board . . . 338
Install the USB I/O board . . . 340
Complete the parts replacement . . . 341

Chapter 2. Problem determination . . . 343

Event logs . . . 343
Specifications . . . 345
Technical specifications . . . 345
Mechanical specifications . . . 352

Environmental specifications 353
Troubleshooting by system LEDs and diagnostics display 356
Drive LEDs 357
E3.S CMM LEDs. 357
External diagnostics handset 358
Front-operator-panel LEDs and buttons . . . 364
LED on the leakage detection sensor module 366
LEDs on the XCC system management port. 367
Power-supply-unit LEDs 367
M.2 LEDs 369
System-board-assembly LEDs 370
General problem determination procedures 374
Resolving suspected power problems 375
Resolving suspected Ethernet controller problems 375
Troubleshooting by symptom 376
Liquid cooling module problems (Compute Complex Neptune Core Module) 376
Liquid cooling module problems (Processor Neptune Core Module) 378
Intermittent problems. 381
Keyboard, mouse, KVM switch or USB-device problems 382
Hot-swap M.2 drive problems 383
Memory problems 383
Monitor and video problems 384
Observable problems. 385
Optional-device problems 388
Performance problems 389
Power on and power off problems. 390
Power problems. 391
Serial-device problems 392
Software problems. 393
Storage drive problems 393
USB I/O board problems 395

Appendix A. Getting help and technical assistance 397
Before you call 397
Collecting service data 398
Contacting Support 399

Appendix B. Documents and supports 401
Documents download 401
Support websites 401

Appendix C. Notices. 403
Trademarks 404
Important notes. 404
Electronic emission notices 404
Taiwan Region BSMI RoHS declaration 405
Taiwan Region import and export contact information 405
TCO Certified. 405

© Copyright Lenovo 2025

Safety

Before installing this product, read the Safety Information.

قبل تركيب هذا المنتج، يجب قراءة الملاحظات الآمنية

Antes de instalar este produto, leia as Informações de Segurança.

在安装本产品之前，请仔细阅读 Safety Information （安全信息）。

安裝本產品之前，請先閱讀「安全資訊」。

Prije instalacije ovog produkta obavezno pročitajte Sigurnosne Upute.

Před instalací tohoto produktu si přečtěte příručku bezpečnostních instrukcí.

Læs sikkerhedsforskrifterne, før du installerer dette produkt.

Lees voordat u dit product installeert eerst de veiligheidsvoorschriften.

Ennen kuin asennat tämän tuotteen, lue turvaohjeet kohdasta Safety Information.

Avant d'installer ce produit, lisez les consignes de sécurité.

Vor der Installation dieses Produkts die Sicherheitshinweise lesen.

Πριν εγκαταστήσετε το προϊόν αυτό, διαβάστε τις πληροφορίες ασφάλειας (safety information).

לפני שתתקינו מוצר זה, קראו את הוראות הבטיחות.

A termék telepítése előtt olvassa el a Biztonsági előírásokat!

Prima di installare questo prodotto, leggere le Informazioni sulla Sicurezza.

製品の設置の前に、安全情報をお読みください。

본 제품을 설치하기 전에 안전 정보를 읽으십시오.

Пред да се инсталира овој продукт, прочитајте информацијата за безбедност.

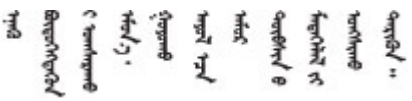

Les sikkerhetsinformasjonen (Safety Information) før du installerer dette produktet.

Przed zainstalowaniem tego produktu, należy zapoznać się z książką "Informacje dotyczące bezpieczeństwa" (Safety Information).

Antes de instalar este produto, leia as Informações sobre Segurança.

© Copyright Lenovo 2025

Перед установкой продукта прочтите инструкции по технике безопасности.

Pred inštaláciou tohto zariadenia si pečítaje Bezpečnostné predpisy.

Pred namestitvijo tega proizvoda preberite Varnostne informacije.

Antes de instalar este producto, lea la información de seguridad.

Läs säkerhetsinformationen innan du installerar den här produkten.

ཐོན་རྫས་འདི་བདེ་སྐྱོང་མ་བྱས་གོང་། ·སྐྲ་ཐྱི་ཡིད་གཟབ· བྱ་འདྲ་མིན་ཡོད་པའི་འོད་སྣེར་བལྟ་དགོས།

Bu ürünü kurmadan önce güvenlik bilgilerini okuyun.

ھەزكۇر مەھسۇلاتنى ئورنىتىشتىن بۇرۇن بىخەتەرلىك ئۇچۇرلىرىنى ئوقۇپ چىقىڭ.

Youq mwngz yungh canjbinj neix gaxgonq, itdingh aeu doeg aen canjbinj soengq cungj vahgangj ancien siusik.

Safety inspection checklist

Use the information in this section to identify potentially unsafe conditions with your server. As each machine was designed and built, required safety items were installed to protect users and service technicians from injury.

Note: The product is not suitable for use at visual display workplaces according to §2 of the Workplace Regulations.

Note: The set-up of the server is made in the server room only.

CAUTION:
This equipment must be installed or serviced by trained personnel, as defined by the IEC 62368-1, the standard for Safety of Electronic Equipment within the Field of Audio/Video, Information Technology and Communication Technology. Lenovo assumes you are qualified in the servicing of equipment and trained in recognizing hazards energy levels in products. Access to the equipment is by the use of a tool, lock and key, or other means of security, and is controlled by the authority responsible for the location.

Important: Electrical grounding of the server is required for operator safety and correct system function. Proper grounding of the electrical outlet can be verified by a certified electrician.

Use the following checklist to verify that there are no potentially unsafe conditions:

1. Make sure that the power is off and the power cord is disconnected.
2. Check the power cord.
   - Make sure that the third-wire ground connector is in good condition. Use a meter to measure third-wire ground continuity for 0.1 ohm or less between the external ground pin and the frame ground.
   - Make sure that the power cord is the correct type.

     To view the power cords that are available for the server:

     a. Go to:

http://dcsc.lenovo.com/#/

b. Click **Preconfigured Model** or **Configure to order**.

c. Enter the machine type and model for your server to display the configurator page.

d. Click **Power → Power Cables** to see all line cords.

- Make sure that the insulation is not frayed or worn.

3. Check for any obvious non-Lenovo alterations. Use good judgment as to the safety of any non-Lenovo alterations.
4. Check inside the server for any obvious unsafe conditions, such as metal filings, contamination, water or other liquid, or signs of fire or smoke damage.
5. Check for worn, frayed, or pinched cables.
6. Make sure that the power-supply cover fasteners (screws or rivets) have not been removed or tampered with.

© Copyright Lenovo 2025

Chapter 1. Hardware replacement procedures

This section provides installation and removal procedures for all serviceable system components. Each component replacement procedure references any tasks that need to be performed to gain access to the component being replaced.

Installation Guidelines

Before installing components in your server, read the installation guidelines.

Before installing optional devices, read the following notices carefully:

Attention: Prevent exposure to static electricity, which might lead to system halt and loss of data, by keeping static-sensitive components in their static-protective packages until installation, and handling these devices with an electrostatic-discharge wrist strap or other grounding system.

- Read the safety information and guidelines to ensure your safety at work:
  - A complete list of safety information for all products is available at:

    https://pubs.lenovo.com/safety_documentation/
  - The following guidelines are available as well: “Working inside the server with the power on” on page 4 and “Handling static-sensitive devices” on page 4.
- Make sure the components you are installing are supported by your server.
  - For a list of supported optional components for the server, see https://serverproven.lenovo.com.
  - For the option package contents, see https://serveroption.lenovo.com/.
- For more information about ordering parts:
  1. Go to **http://datacentersupport.lenovo.com** and navigate to the support page for your server.
  2. Click **Parts**.
  3. Enter the serial number to view a listing of parts for your server.
- When you install a new server, download and apply the latest firmware. This will help ensure that any known issues are addressed, and that your server is ready to work with optimal performance. Go to https://datacentersupport.lenovo.com/products/servers/thinksystem/sr650v4/downloads/driver-list/ to download firmware updates for your server.

  Important: Some cluster solutions require specific code levels or coordinated code updates. If the component is part of a cluster solution, verify the latest Best Recipe code level menu for cluster supported firmware and driver before you update the code.
- If you replace a part, such as an adapter, that contains firmware, you might also need to update the firmware for that part. For more information about updating firmware, see “Update the firmware” in *User Guide* or *System Configuration Guide*.
- It is good practice to make sure that the server is working correctly before you install an optional component.
- Keep the working area clean, and place removed components on a flat and smooth surface that does not shake or tilt.
- Do not attempt to lift an object that might be too heavy for you. If you have to lift a heavy object, read the following precautions carefully:
  - Make sure that you can stand steadily without slipping.
  - Distribute the weight of the object equally between your feet.

© Copyright Lenovo 2025

  - Use a slow lifting force. Never move suddenly or twist when you lift a heavy object.
  - To avoid straining the muscles in your back, lift by standing or by pushing up with your leg muscles.
- Back up all important data before you make changes related to the disk drives.
- Have a small flat-blade screwdriver, a small Phillips screwdriver, a Torx T8 screwdriver, and a Torx T30 screwdriver available.
- To view the error LEDs on the system board assembly and internal components, leave the power on.
- You do not have to turn off the server to remove or install hot-swap power supplies, hot swap fans, or hot-plug USB devices. However, you must turn off the server before you perform any steps that involve removing or installing adapter cables, and you must disconnect the power source from the server before you perform any steps that involve removing or installing a riser card.
- When replacing power supply units or fans, make sure to refer to redundancy rules for these components.
- Blue on a component indicates touch points, where you can grip to remove a component from or install it in the server, open or close a latch, and so on.
- Except PSU, orange on a component or an orange label on or near a component indicates that the component can be hot-swapped if the server and operating system support hot-swap capability, which means that you can remove or install the component while the server is still running. (Orange can also indicate touch points on hot-swap components.) See the instructions for removing or installing a specific hot-swap component for any additional procedures that you might have to perform before you remove or install the component.
- PSU with a release tab is a hot-swap PSU. The color of the release tab does not affect the serviceability of the PSU.
- The red strip on the drives, adjacent to the release latch, indicates that the drive can be hot-swapped if the server and operating system support hot-swap capability. This means that you can remove or install the drive while the server is still running.

  Note: See the system specific instructions for removing or installing a hot-swap drive for any additional procedures that you might need to perform before you remove or install the drive.
- After finishing working on the server, make sure you reinstall all safety shields, guards, labels, and ground wires.

Safety inspection checklist

Use the information in this section to identify potentially unsafe conditions with your server. As each machine was designed and built, required safety items were installed to protect users and service technicians from injury.

Note: The product is not suitable for use at visual display workplaces according to §2 of the Workplace Regulations.

Note: The set-up of the server is made in the server room only.

CAUTION:
This equipment must be installed or serviced by trained personnel, as defined by the IEC 62368-1, the standard for Safety of Electronic Equipment within the Field of Audio/Video, Information Technology and Communication Technology. Lenovo assumes you are qualified in the servicing of equipment and trained in recognizing hazards energy levels in products. Access to the equipment is by the use of a tool, lock and key, or other means of security, and is controlled by the authority responsible for the location.

Important: Electrical grounding of the server is required for operator safety and correct system function. Proper grounding of the electrical outlet can be verified by a certified electrician.

Use the following checklist to verify that there are no potentially unsafe conditions:

1. Make sure that the power is off and the power cord is disconnected.
2. Check the power cord.
   - Make sure that the third-wire ground connector is in good condition. Use a meter to measure third-wire ground continuity for 0.1 ohm or less between the external ground pin and the frame ground.
   - Make sure that the power cord is the correct type.

     To view the power cords that are available for the server:

     a. Go to:

        http://dcsc.lenovo.com/#/

     b. Click **Preconfigured Model** or **Configure to order**.

     c. Enter the machine type and model for your server to display the configurator page.

     d. Click **Power → Power Cables** to see all line cords.
   - Make sure that the insulation is not frayed or worn.
3. Check for any obvious non-Lenovo alterations. Use good judgment as to the safety of any non-Lenovo alterations.
4. Check inside the server for any obvious unsafe conditions, such as metal filings, contamination, water or other liquid, or signs of fire or smoke damage.
5. Check for worn, frayed, or pinched cables.
6. Make sure that the power-supply cover fasteners (screws or rivets) have not been removed or tampered with.

System reliability guidelines

Review the system reliability guidelines to ensure proper system cooling and reliability.

Make sure the following requirements are met:

- When the server comes with redundant power, a power supply unit must be installed in each power-supply bay.
- Adequate space around the server must be spared to allow server cooling system to work properly. Leave approximately 50 mm (2.0 in.) of open space around the front and rear of the server. Do not place any object in front of the fans.
- For proper cooling and airflow, refit the server cover before you turn the power on. Do not operate the server for more than 30 minutes with the server cover removed, for it might damage server components.
- Cabling instructions that come with optional components must be followed.
- A failed fan must be replaced within 48 hours after malfunction.
- A removed hot-swap fan must be replaced within 30 seconds after removal.
- A removed hot-swap drive must be replaced within two minutes after removal.
- A removed hot-swap power supply unit must be replaced within two minutes after removal.
- Every air baffle that comes with the server must be installed when the server starts (some servers might come with more than one air baffle). Operating the server with a missing air baffle might damage the processor.
- All processor sockets must contain either a socket cover or a processor with heat sink.
- When more than one processor is installed, fan population rules for each server must be strictly followed.

Working inside the server with the power on

You might need to keep the power on with the server cover removed to look at system information on the display panel or to replace hot-swap components. Review these guidelines before doing so.

Attention: The server might stop and data loss might occur when internal server components are exposed to static electricity. To avoid this potential problem, always use an electrostatic-discharge wrist strap or other grounding systems when working inside the server with the power on.

- Avoid loose-fitting clothing, particularly around your forearms. Button or roll up long sleeves before working inside the server.
- Prevent your necktie, scarf, badge rope, or hair from dangling into the server.
- Remove jewelry, such as bracelets, necklaces, rings, cuff links, and wrist watches.
- Remove items from your shirt pocket, such as pens and pencils, in case they fall into the server as you lean over it.
- Avoid dropping any metallic objects, such as paper clips, hairpins, and screws, into the server.

Handling static-sensitive devices

Review these guidelines before you handle static-sensitive devices to reduce the possibility of damage from electrostatic discharge.

Attention: Prevent exposure to static electricity, which might lead to system halt and loss of data, by keeping static-sensitive components in their static-protective packages until installation, and handling these devices with an electrostatic-discharge wrist strap or other grounding system.

- Limit your movement to prevent building up static electricity around you.
- Take additional care when handling devices during cold weather, for heating would reduce indoor humidity and increase static electricity.
- Always use an electrostatic-discharge wrist strap or other grounding system, particularly when working inside the server with the power on.
- While the device is still in its static-protective package, touch it to an unpainted metal surface on the outside of the server for at least two seconds. This drains static electricity from the package and from your body.
- Remove the device from the package and install it directly into the server without putting it down. If it is necessary to put the device down, put it back into the static-protective package. Never place the device on the server or on any metal surface.
- When handling a device, carefully hold it by the edges or the frame.
- Do not touch solder joints, pins, or exposed circuitry.
- Keep the device from others' reach to prevent possible damages.

Technical rules

This topic provides technical rules for the server.

- "Memory module installation rules and order" on page 5
- "PCIe slots and PCIe adapters" on page 12
- "Thermal rules" on page 17

Memory module installation rules and order

Memory modules must be installed in a specific order based on the memory configuration that you implement and the number of processors and memory modules installed in the server.

Supported memory types

For information on the types of memory module supported by this server, see “Memory” section in “Technical specifications” on page 345.

For a list of supported memory options, see https://serverproven.lenovo.com.

Information about optimizing memory performance and configuring memory is available at the Lenovo Press website:

https://lenovopress.com/servers/options/memory

In addition, you can take advantage of a memory configurator, which is available at the following site:

https://dcsc.lenovo.com/#/memory_configuration

Specific information about the required installation order of memory modules in your server based on the system configuration and memory mode that you are implementing is shown below.

- “Memory modules and processors layout of servers without Compute Complex Neptune Core Module” on page 5
- “Memory modules and processors layout of servers with Compute Complex Neptune Core Module” on page 6

Memory modules and processors layout of servers without Compute Complex Neptune Core Module

The following illustration helps you to locate the memory module slots on the processor board for servers without Compute Complex Neptune Core Module. The memory-channel identification table below shows the relationship between the processors, memory controllers, memory channels, and memory module slot numbers.

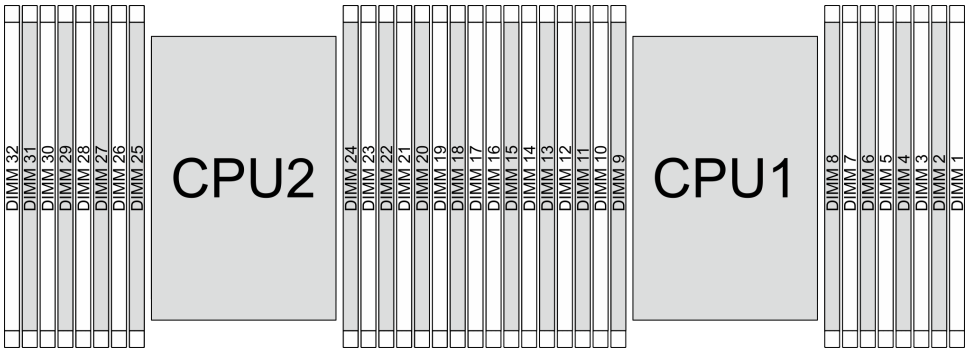

Figure 1. Memory module slots on the processor board for servers without Compute Complex Neptune Core Module

Table 1. Memory slot and channel identification for servers without **Compute Complex Neptune Core Module**

Processor	**CPU 1**							
Controller	iMC7	iMC6	iMC5	iMC4	iMC0	iMC1	iMC2	iMC3
Channel	CH7	CH6	CH5	CH4	CH0	CH1	CH2	CH3

Table 1. Memory slot and channel identification for servers without Compute Complex Neptune Core Module *(continued)*

Slot No.	0	1	0	1	0	1	0	1	1	0	1	0	1	0	1	0
DIMM No.	16	15	14	13	12	11	10	9	8	7	6	5	4	3	2	1
Processor	**CPU 2**															
Controller	iMC7		iMC6		iMC5		iMC4		iMC0		iMC1		iMC2		iMC3	
Channel	CH7		CH6		CH5		CH4		CH0		CH1		CH2		CH3	
Slot No.	0	1	0	1	0	1	0	1	1	0	1	0	1	0	1	0
DIMM No.	32	31	30	29	28	27	26	25	24	23	22	21	20	19	18	17

- Slot No.: DIMM slot number in each memory channel. Each memory channel has two DIMM slots: slot 0 (further from the processor) and slot 1 (closer to the processor).
- DIMM No.: DIMM slot number on the processor board. Each processor has 16 DIMM slots.

Memory modules and processors layout of servers with Compute Complex Neptune Core Module

The following illustration helps you to locate the memory module slots on the processor board for of servers with Compute Complex Neptune Core Module. The memory-channel identification table below shows the relationship between the processors, memory controllers, memory channels, and memory module slot numbers.

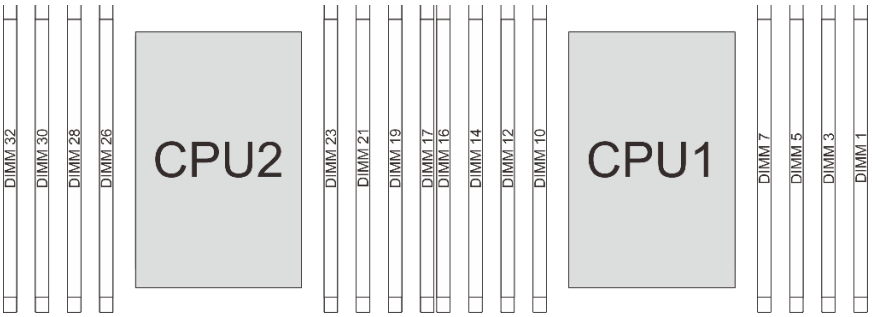

Figure 2. Memory module slots on the processor board for servers with Compute Complex Neptune Core Module

Table 2. Memory slot and channel identification for servers with **Compute Complex Neptune Core Module**

Processor	**CPU 1**							
Controller	iMC7	iMC6	iMC5	iMC4	iMC0	iMC1	iMC2	iMC3
Channel	CH7	CH6	CH5	CH4	CH0	CH1	CH2	CH3
Slot No.	0	0	0	0	0	0	0	0
DIMM No.	16	14	12	10	7	5	3	1
Processor	**CPU 2**							
Controller	iMC7	iMC6	iMC5	iMC4	iMC0	iMC1	iMC2	iMC3
Channel	CH7	CH6	CH5	CH4	CH0	CH1	CH2	CH3
Slot No.	0	0	0	0	0	0	0	0
DIMM No.	32	30	28	26	23	21	19	17

- Slot No.: DIMM slot number in each memory channel. Each memory channel has one DIMM slot.
- DIMM No.: DIMM slot number on the processor board. Each processor has eight DIMM slots.

Memory module installation guideline

- At least one DIMM is required for each processor. Install at least eight DIMMs per processor for good performance.
- When you replace a DIMM, the server provides automatic DIMM enablement capability without requiring you to use the Setup Utility to enable the new DIMM manually.
- For memory module installation rules and orders, see:
  - “DDR5 DIMMs only” on page 7
  - “DDR5 RDIMMs mixed with CXL memory modules” on page 11

DDR5 DIMMs only

This section contains information about how to install DDR5 registered DIMMs (RDIMMs) and Multiplexed Rank DIMMs (MRDIMMs) properly in configurations without CXL memory modules (CMMs).

Note: MRDIMMs are supported only on servers equipped with processor 6747P, 6761P, 6767P, 6781P, or 6787P.

For DDR5 RDIMMs and MRDIMMs, the following two memory modes are available.

- “Independent mode installation order” on page 7
- “**Mirroring mode installation order**” on page 10

Independent mode installation order

In independent mode, memory channels can be populated with DIMMs in any order, and you can populate all channels for each processor in any order with no matching requirements. Independent mode provides the highest level of memory performance, but lacks failover protection. The DIMM installation order for independent mode varies based on the number of processors and memory modules installed in the server.

- “Memory module mixing rules in independent mode” on page 7
- “DIMM installation order for independent mode of servers without Compute Complex Neptune Core Module” on page 8
- “DIMM installation order for independent mode of servers with Compute Complex Neptune Core Module” on page 9

Memory module mixing rules in independent mode

DIMMs	Coexist in a system
RDIMMs and MRDIMMs	x
3DS RDIMMs and other RDIMM types	x
x4 DIMMs and x8 DIMMs	x
Different DRAM density (16Gbit, 24Gbit, and 32Gbit)	x
DIMMs of different ranks	x
DIMMs of different capacity	x
DIMMs from different vendors	√

Notes:
1. The 16Gbit DRAM is used in 16 GB, 32 GB, and 64 GB DIMMs. The 24Gbit DRAM is used in 48 GB and 96 GB DIMMs. The 32Gbit DRAM is used in 128 GB 2Rx4 DIMMs.
2. Memory population must be identical between processors.
3. All DDR5 DIMMs must operate at the same speed in the same system.

DIMM installation order for independent mode of servers without Compute Complex Neptune Core Module

The following tables show the memory module installation order for independent mode of servers without Compute Complex Neptune Core Module.

Table 3. Independent mode with one processor

Total DIMMs	Processor 1															
	16	**15**	**14**	**13**	**12**	**11**	**10**	**9**	**8**	**7**	**6**	**5**	**4**	**3**	**2**	**1**
1 DIMM[1]										7						
4 DIMMs[1,2]			14				10			7				3		
4 DIMMs[1,2,3]	16				12							5				1
8 DIMMs[1,2,4]	16		14		12		10			7		5		3		1
12 DIMMs[1,2,4]	16		14	13	12		10	9	8	7		5	4	3		1
16 DIMMs[1,2,4]	16	15	14	13	12	11	10	9	8	7	6	5	4	3	2	1

Table 4. Independent mode with two processors

Total DIMMs	Processor 1															
	16	**15**	**14**	**13**	**12**	**11**	**10**	**9**	**8**	**7**	**6**	**5**	**4**	**3**	**2**	**1**
2 DIMMs[1]										7						
8 DIMMs[1,2]			14				10			7				3		
8 DIMMs[1,2,3]	16				12							5				1
16 DIMMs[1,2,4]	16		14		12		10			7		5		3		1
24 DIMMs[1,2,4]	16		14	13	12		10	9	8	7		5	4	3		1
32 DIMMs[1,2,4]	16	15	14	13	12	11	10	9	8	7	6	5	4	3	2	1
Total DIMMs	**Processor 2**															
	32	**31**	**30**	**29**	**28**	**27**	**26**	**25**	**24**	**23**	**22**	**21**	**20**	**19**	**18**	**17**
2 DIMMs[1]										23						
8 DIMMs[1,2]			30				26			23				19		
8 DIMMs[1,2,3]	32				28							21				17
16 DIMMs[1,2,4]	32		30		28		26			23		21		19		17
24 DIMMs[1,2,4]	32		30	29	28		26	25	24	23		21	20	19		17
32 DIMMs[1,2,4]	32	31	30	29	28	27	26	25	24	23	22	21	20	19	18	17

Notes:

1. Supported DIMMs are subject to the following restrictions:

DIMM configuration	Slot No.	Supported DIMMs
1-DIMM (1P) or 2-DIMM (2P)	**0**	**16 GB, 32 GB (2Rx8), or 64 GB RDIMMs**
	1	**N/A**
4-DIMM (1P) or 8-DIMM (2P)	**0**	**16/32/48/64 GB RDIMMs**
	1	**N/A**

DIMM configuration	Slot No.	Supported DIMMs
8-DIMM (1P) or 16-DIMM (2P)	**0**	**16/32/48/64/96/128 GB RDIMMs, 32/64 GB MRDIMMs, or 256 GB 3DS RDIMMs**
	1	**N/A**
12-DIMM (1P) or 24-DIMM (2P)	**0**	**32 GB (2Rx8) RDIMMs**
	1	**Same as slot 0**
16-DIMM (1P) or 32-DIMM (2P)	**0**	**32 GB (2Rx8), 64 GB, 96 GB, or 128 GB RDIMMs or 256 GB 3DS RDIMMs**
	1	**Same as slot 0**
1P: one processor; 2P: two processors		

2. The DIMM configurations support the Sub-NUMA Clustering (SNC) feature, which is available only to Extreme Core Count (XCC) processors and can be enabled via UEFI.
3. The DIMM configurations are optional. For optimal performance, you are recommended to install DIMMs in the standard installation order. The optional installation order is used only for special requirements.
4. The DIMM configurations support the Software Guard Extensions (SGX) feature. See “Enable Software Guard Extensions (SGX)” in *User Guide* or *System Configuration Guide* to enable this feature.

DIMM installation order for independent mode of servers with Compute Complex Neptune Core Module

The following table shows the memory module installation order for independent mode of servers with Compute Complex Neptune Core Module.

Table 5. Independent mode of servers with **Compute Complex Neptune Core Module**

Total DIMMs	Processor 2								Processor 1							
	32	30	28	26	23	21	19	17	16	14	12	10	7	5	3	1
2 DIMMs[1]					23								7			
8 DIMMs[1,2]		30		26	23		19			14		10	7		3	
8 DIMMs[1,2,3]	32		28			21		17	16		12			5		1
16 DIMMs[1,2,4]	32	30	28	26	23	21	19	17	16	14	12	10	7	5	3	1

Notes:

1. Supported DIMMs are subject to the following restrictions:

DIMM configuration	Slot No.	Supported DIMMs
2-DIMM	**0**	**16 GB, 32 GB (2Rx8), or 64 GB RDIMMs**
8-DIMM	**0**	**16/32/48/64 GB RDIMMs**
16-DIMM	**0**	**16/32/48/64/96/128 GB RDIMMs, 32/64 GB MRDIMMs, or 256 GB 3DS RDIMMs**

2. The DIMM configurations support the Sub-NUMA Clustering (SNC) feature, which is available only to Extreme Core Count (XCC) processors and can be enabled via UEFI.
3. The DIMM configuration is optional. For optimal performance, you are recommended to install DIMMs in the standard installation order. The optional installation order is used only for special requirements.

4. The DIMM configurations support the Software Guard Extensions (SGX) feature. See “Enable Software Guard Extensions (SGX)” in *User Guide* or *System Configuration Guide* to enable this feature.

Mirroring mode installation order

Mirroring mode provides full memory redundancy while reducing the total system memory capacity in half. Memory channels are grouped in pairs with each channel receiving the same data. If a failure occurs, the memory controller switches from the DIMMs on the primary channel to the DIMMs on the backup channel. The DIMM installation order for memory mirroring varies based on the number of processors and DIMMs installed in the server.

In mirroring mode, each memory module in a pair must be identical in size and architecture. The channels are grouped in pairs with each channel receiving the same data. One channel is used as a backup of the other, which provides redundancy.

Follow the rules below when installing memory modules in mirroring mode:
- All memory modules to be installed must be of the same Lenovo part number.
- Partial Memory Mirroring is a sub-function of memory mirroring. It requires following the memory installation order of memory mirroring mode.

See the specific section below for the DIMM installation order depending on whether the server is equipped with Compute Complex Neptune Core Module.
- “Mirroring mode of servers without Compute Complex Neptune Core Module” on page 10
- “Mirroring mode of servers with Compute Complex Neptune Core Module” on page 11

Mirroring mode of servers without Compute Complex Neptune Core Module

The following table shows the DIMM installation order for mirroring mode when only one processor (processor 1) is installed on servers without Compute Complex Neptune Core Module.

Table 6. Mirroring mode with one processor

Total DIMMs	**Processor 1**															
	16	**15**	**14**	**13**	**12**	**11**	**10**	**9**	**8**	**7**	**6**	**5**	**4**	**3**	**2**	**1**
8 DIMMs	16		14		12		10			7		5		3		1
16 DIMMs	16	15	14	13	12	11	10	9	8	7	6	5	4	3	2	1

The following table shows the DIMM installation order for mirroring mode when two processors are installed on servers without Compute Complex Neptune Core Module.

Table 7. Mirroring mode with two processors

Total DIMMs	**Processor 1**															
	16	**15**	**14**	**13**	**12**	**11**	**10**	**9**	**8**	**7**	**6**	**5**	**4**	**3**	**2**	**1**
16 DIMMs	16		14		12		10			7		5		3		1
32 DIMMs	16	15	14	13	12	11	10	9	8	7	6	5	4	3	2	1
Total DIMMs	**Processor 2**															
	32	**31**	**30**	**29**	**28**	**27**	**26**	**25**	**24**	**23**	**22**	**21**	**20**	**19**	**18**	**17**
16 DIMMs	32		30		28		26			23		21		19		17
32 DIMMs	32	31	30	29	28	27	26	25	24	23	22	21	20	19	18	17

Notes:

- All DIMM configurations in mirroring mode support the Sub NUMA Clustering (SNC) feature, which can be enabled via UEFI.
- Supported DIMMs are subject to the following restrictions:

DIMM configuration	Slot No.	Supported DIMMs
8-DIMM (1P) or 16-DIMM (2P)	**0**	**16/32/48/64/96/128 GB RDIMMs, 32/64 GB MRDIMMs, or 256 GB 3DS RDIMMs**
	1	**N/A**
16-DIMM (1P) or 32-DIMM (2P)	**0**	**32 GB (2Rx8), 64 GB, 96 GB, or 128 GB RDIMMs or 256 GB 3DS RDIMMs**
	1	**Same as slot 0**
1P: one processor; 2P: two processors		

Mirroring mode of servers with Compute Complex Neptune Core Module

The following table shows the DIMM installation order for mirroring mode of servers with Compute Complex Neptune Core Module.

Total DIMMs	Processor 2								Processor 1							
	32	30	28	26	23	21	19	17	16	14	12	10	7	5	3	1
16 DIMMs	32	30	28	26	23	21	19	17	16	14	12	10	7	5	3	1

Notes:
- All DIMM configurations in mirroring mode support the Sub NUMA Clustering (SNC) feature, which can be enabled via UEFI.
- Supported DIMMs are subject to the following restrictions:

DIMM configuration	Slot No.	Supported DIMMs
16-DIMM	**0**	**16/32/48/64/96/128 GB RDIMMs, 32/64 GB MRDIMMs, or 256 GB 3DS RDIMMs**

DDR5 RDIMMs mixed with CXL memory modules

This section contains information about how to install DDR5 RDIMMs mixed with CXL memory modules (CMMs) properly.

- Servers with Compute Complex Neptune Core Module do not support CMMs.
- CMM channel: number of devices per root port, with root ports separated by “+”, e.g. 2+2+2+2 = four root ports populated with two devices per root port
- CMM modes:
  - 1LM+Vol = Native DDR5 (1LM) and (volatile) CMM visible to software (SW) as separate tiers, separately interleaved
  - Hetero x12 = DDR5 and (volatile) CMM interleaved together in one 12-way set

    Note: The Hetero mode is not supported with LCC processors. For specific models of LCC processors, see the “Processors” section in https://lenovopress.lenovo.com/lp2127-thinksystem-sr650-v4-server.
- For CMM configurations, see “E3.S chassis without Compute Complex Neptune Core Module” or “E3.S chassis with Compute Complex Neptune Core Module” in *Internal Cable Routing Guide*.
- To set the CMM mode, go to **UEFI Setup → System Settings → Memory → CXL Memory Module → Memory Mode**.

Table 8. Installation rule for one processor (processor 1)

DDR5 RDIMMs			CMM		
Slot 0 DIMMs	**Slot 1 DIMMs**	**RDIMM mode**	**CMM mode**	**CMM capacity per module**	**CMM channels**
8 x 128 GB (2Rx4)	N/A	Independent/mirroring	1LM+Vol	128 GB	2, 2+2, or 2 +2+2
	N/A	Independent	Hetero	128 GB	2+2
	8 x 128 GB (2Rx4)	Independent/mirroring	1LM+Vol	128 GB	2, 2+2, or 2 +2+2
8 x 64 GB (2Rx4)	N/A	Independent/mirroring	1LM+Vol	128 GB	2, 2+2, or 2 +2+2
	8 x 64 GB (2Rx4)				
8 x 96 GB (2Rx4)	N/A	Independent/mirroring	1LM+Vol	96 GB	2, 2+2, or 2 +2+2
	8 x 96 GB (2Rx4)				

Table 9. Installation rule for two processors (processor 1 and processor 2)

DDR5 RDIMMs			CMM per socket		
Slot 0 DIMMs	**Slot 1 DIMMs**	**RDIMM mode**	**CMM mode**	**CMM capacity per module**	**CMM channels**
16 x 128 GB (2Rx4)	N/A	Independent/mirroring	1LM+Vol	128 GB	2, 2+2, or 2 +2+2
	N/A	Independent	Hetero	128 GB	2+2
	16 x 128 GB (2Rx4)	Independent/mirroring	1LM+Vol	128 GB	2, 2+2, or 2 +2+2
16 x 64 GB (2Rx4)	N/A	Independent/mirroring	1LM+Vol	128 GB	2, 2+2, or 2 +2+2
	16 x 64 GB (2Rx4)				
16 x 96 GB (2Rx4)	N/A	Independent/mirroring	1LM+Vol	96 GB	2, 2+2, or 2 +2+2
	16 x 96 GB (2Rx4)				

PCIe slots and PCIe adapters

This topic provides installation rules for PCIe adapters.

- "Slot configurations" on page 12
- "Supported riser cards" on page 14
- "Supported PCIe adapters and slot priorities" on page 15

Slot configurations

The following tables list the PCIe slot configurations for each server view.

Notes:

- For PCIe slot installation rules, see https://pubs.lenovo.com/sr650-v4/sr650_v4_pcie_slot_installation_guide.xlsm.
- For riser cages available on each riser assembly, see Rear riser assembly and PCIe adapter replacement.

LP: lower profile; FH: full-height; HL: half-length; FL: full-length

PCIe slots

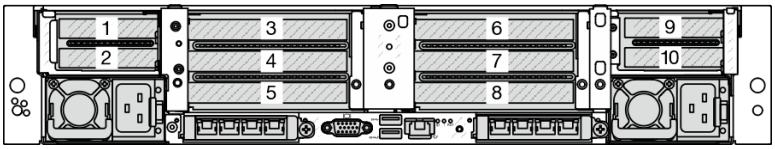

Figure 3. Rear view with ten PCIe slots

Riser assembly 1	**Riser assembly 2**	
Slot 1: x8 (CPU1), LP	Slot 3: x8 (CPU1), FH/FL	Slot 3: x16 (CPU1), FH/FL
Slot 2: x8 (CPU1), LP	Slot 4: x16 (CPU1), FH/FL	Slot 4: x16 (CPU1), FH/FL
	Slot 5: x16 (CPU1), FH/HL	Slot 5: Empty
Riser assembly 4	**Riser assembly 3**	
Slot 9: x8 (CPU2), LP	Slot 6: x8 (CPU2), FH/FL	Slot 6: x16 (CPU2), FH/FL
Slot 10: x8 (CPU2), LP	Slot 7: x16 (CPU2), FH/FL	Slot 7: x16 (CPU2), FH/FL
	Slot 8: x16 (CPU2), FH/HL	Slot 8: Empty

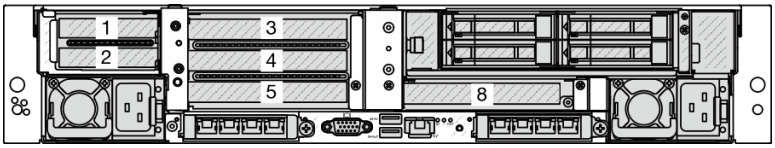

Figure 4. Rear view with six PCIe slots

Riser assembly 1	**Riser assembly 2**	
Slot 1: x8 (CPU1), LP	Slot 3: x8 (CPU1), FH/FL	Slot 3: x16 (CPU1), FH/FL
Slot 2: x8 (CPU1), LP	Slot 4: x16 (CPU1), FH/FL	Slot 4: x16 (CPU1), FH/FL
	Slot 5: x16 (CPU1), FH/HL	Slot 5: Empty
Riser assembly 3		
Slot 8: x16 (CPU2), FH/HL		

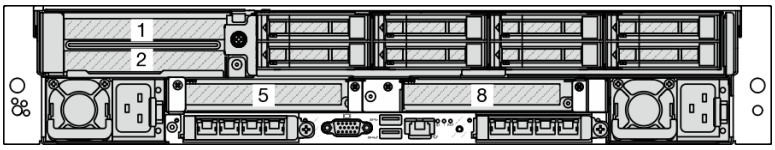

Figure 5. Rear view with four PCIe slots

Riser assembly 1	**Riser assembly 2**	**Riser assembly 3**
Slot 1: x8 (CPU1), FH/HL	Slot 5: x16 (CPU1), FH/HL	Slot 8: x16 (CPU2), FH/HL
Slot 2: x16 (CPU1), FH/HL		

PCIe slots		
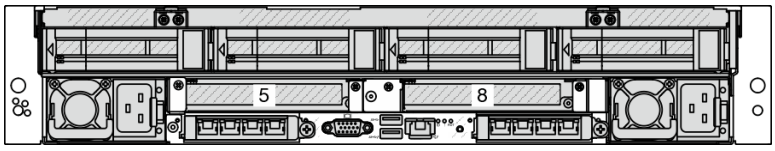 *Figure 6. Rear view with two PCIe slots*		
Riser assembly 2	**Riser assembly 3**	
Slot 5: x16 (CPU1), FH/HL	Slot 8: x16 (CPU2), FH/HL	

Supported riser cards

The following table lists the riser cards supported on each slot.

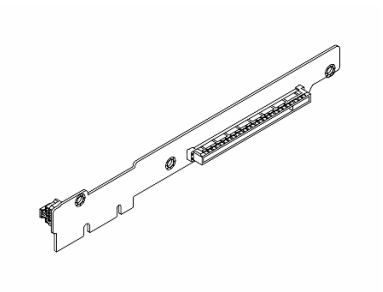 *Figure 7. Rigid riser card for servers without* Compute Complex Neptune Core Module **Note:** This riser card is mounted on slot 5/8.	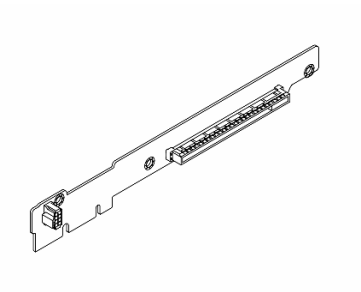 *Figure 8. Rigid riser card for servers with* Compute Complex Neptune Core Module **Note:** This riser card is mounted on slot 5/8.
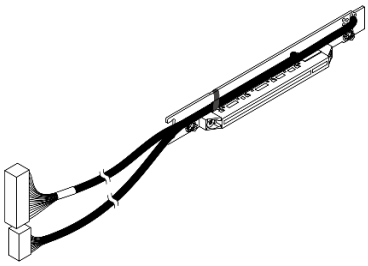 *Figure 9. Cable riser card (Gen5 x8, 500/400 mm)* **Note:** This riser card is mounted on slot 1/2/9/10 in configurations without 8 x 2.5" rear drive cage.	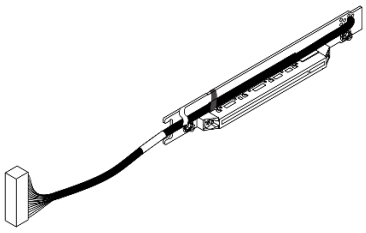 *Figure 10. Cable riser card (Gen5 x8, 350 mm)* **Note:** This riser card is mounted on slot 3/6 in configurations without 8 x 2.5" rear drive cage or slot 1 in configurations with 8 x 2.5" rear drive cage.

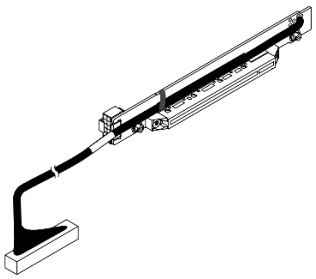

Figure 11. Cable riser card with power connector (Gen5 x16, 300 mm, slot 3/6)

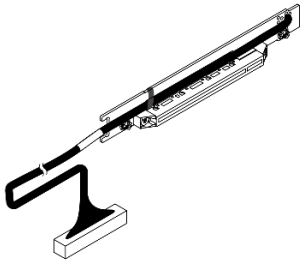

Figure 12. Cable riser card (Gen5 x16, 300 mm)

Note:
This riser card is mounted on slot 4/7 in configurations without 8 x 2.5" rear drive cage or slot 2 in configurations with 8 x 2.5" rear drive cage.

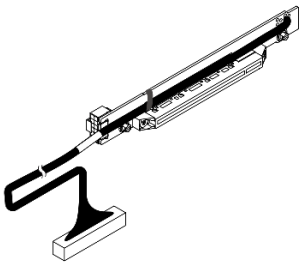

Figure 13. Cable riser card with power connector (Gen5 x16, 300 mm, slot 4/7)

Supported PCIe adapters and slot priorities

The following table lists the recommended slot installation priority for common PCIe adapters.

PCIe adapter	Maximum supported	Suggested slot priority
GPU adapter		
FHFL DW GPU	2	• 1 CPU: 4 • 2 CPUs: 4, 7
FHFL SW GPU: RTX 4000 Ada	4	• 1 CPU: 4, 3 (x16) • 2 CPUs: 4, 7, 3 (x16), 6 (x16)
HHHL SW GPU: L4	10	• 1 CPU: 5, 4, 3, 1, 2 • 2 CPUs: 5, 8, 4, 7, 3, 6 ,1, 2, 9, 10
Data processing unit (DPU)		
ThinkSystem NVIDIA BlueField-3 VPI QSFP112 2P 200G PCIe Gen5 x16 B3220	2	• 1 CPU: 4, 3 (x16), 5 • 2 CPUs: 4, 7, 3 (x16), 6 (x16), 5, 8
Internal custom form factor (CFF) RAID/HBA/Expander		

PCIe adapter	Maximum supported	Suggested slot priority
440-16i, 940-16i	1	Not installed in PCIe slots. The CFF RAID/HBA/Expander adapter is supported only in the 2.5-inch drive bay chassis, which is installed between the front backplane and the system board assembly.
ThinkSystem 48 port 12Gb Internal Expander		
Internal standard form factor (SFF) RAID/HBA adapter		
5350-8i, 9350-8i, 545-8i, 940-8i	3	• 1 CPU: – 1, 2, 3 (x8), 5, 4 – 1, 2, 5, 4, 3 (x16) • 2 CPUs: – 1, 2, 3 (x8), 6 (x8), 9, 10, 5, 8, 4, 7 – 1, 2, 9, 10, 5, 8, 4, 7, 3 (x16), 6 (x16)
4350-16i, 440-16i, 9350-16i, 940-16i	2	
External RAID/HBA adapter		
440-16e	10	• 1 CPU: – 1, 2, 3 (x8), 5, 4 – 1, 2, 5, 4, 3 (x16) • 2 CPUs: – 1, 2, 3 (x8), 6 (x8), 9, 10, 5, 8, 4, 7 – 1, 2, 9, 10, 5, 8, 4, 7, 3 (x16), 6 (x16)
940-8e	4	
FC HBA adapter		
All supported FC HBA adapters	10	• 1 CPU: – 1, 2, 3 (x8), 5, 4 – 1, 2, 5, 4, 3 (x16) • 2 CPUs: – 1, 2, 3 (x8), 6 (x8), 9, 10, 5, 8, 4, 7 – 1, 2, 9, 10, 5, 8, 4, 7, 3 (x16), 6 (x16)
NIC adapter		
ThinkSystem Nvidia ConnectX-7 10/25GbE SFP28 4-Port PCIe Ethernet Adapter(Generic)	4	• 1 CPU: 5, 4, 3 (x16) • 2 CPUs: 5, 8, 4, 7, 3 (x16), 6 (x16)
ThinkSystem Broadcom 57412 10GBASE-T 4-port PCIe Ethernet Adapter ThinkSystem Broadcom 57504 10/25GbE SFP28 4-port PCIe Ethernet Adapter ThinkSystem Broadcom 57508 100GbE QSFP56 2-port PCIe 4 Ethernet Adapter V2 ThinkSystem Broadcom 57608 2x200/1x400GbE QSFP112 PCIe Ethernet Adapter ThinkSystem Mellanox ConnectX-6 Dx 100GbE QSFP56 2-port PCIe Ethernet Adapter	4	• 1 CPU: 5, 4, 3 (x16), 2 (x16) • 2 CPUs: 5, 8, 4, 7, 3 (x16), 6 (x16), 2 (x16)

PCIe adapter	Maximum supported	Suggested slot priority
ThinkSystem Broadcom 5719 1GbE RJ45 4-Port PCIe Ethernet Adapter ThinkSystem Broadcom 57414 10/25GbE SFP28 2-port PCIe Ethernet Adapter V2 ThinkSystem Broadcom 57416 10GBASE-T 2-port PCIe Ethernet Adapter ThinkSystem Mellanox ConnectX-6 Lx 10/25GbE SFP28 2-port PCIe Ethernet Adapter	10	• 1 CPU: – 1, 2, 3 (x8), 5, 4 – 1, 2, 5, 4, 3 (x16) • 2 CPUs: – 1, 2, 3 (x8), 6 (x8), 9, 10, 5, 8, 4, 7 – 1, 2, 9, 10, 5, 8, 4, 7, 3 (x16), 6 (x16)
InfiniBand (IB) adapter		
ThinkSystem NVIDIA ConnectX-7 NDR400 OSFP 1-port PCIe Gen5 VPI Adapter ThinkSystem NVIDIA ConnectX-7 NDR200/ 200GbE QSFP112 2-port PCIe Gen5 x16 InfiniBand Adapter	4	• 1 CPU: 5, 4, 3 (x16), 2 (x16) • 2 CPUs: 5, 8, 4, 7, 3 (x16), 6 (x16), 2 (x16)
ThinkSystem NVIDIA ConnectX-8 8180 800Gbs XDR IB / 2x400GbE OSFP 1-port PCIe Gen6 x16 (Generic FW) ThinkSystem NVIDIA ConnectX-8 8240 400GbE / 400Gb/s IB QSFP112 2-port PCIe Gen6 x16 (Generic FW) **Note:** When adding the ConnectX-8 adapter and auxiliary cable for the first time, follow the instructions in https://lenovopress.lenovo.com/lp2227-configuring-nvidia-cx8-adapter-and-aux-cable-on-thinksystem-servers to enable the Gen 5 x32 host connection. For routing of the auxiliary cable, see ***Internal Cable Routing Guide***.	2	• 1 CPU: 5 • 2 CPUs: 5, 7

Thermal rules

This topic provides thermal rules of the server.

- "Standard configurations" on page 20
  - Table 10 "Standard configurations with 2.5"/3.5" front drive bays" on page 20
  - Table 11 "Standard configurations with E3.S front bays" on page 20
- "Storage configurations" on page 21
  - Table 12 "Storage configurations with 24 x 2.5" front drive bays" on page 21
  - Table 13 "Storage configurations with 12 x 3.5" front drive bays" on page 21
  - Table 14 "Storage configurations with E3.S front bays" on page 22
- "GPU configurations" on page 22
  - Table 15 "GPU configurations with 2.5"/3.5" front drive bays" on page 23
  - Table 16 "GPU configurations with E3.S front bays" on page 23
- "Configurations with Compute Complex Neptune Core Module" on page 23

Abbreviations used in the tables below are defined as follows:

- NV: NVMe
- S/S: SAS/SATA
- N/A: not applicable
- RDIMM: registered DIMM
- MRDIMM: Multiplexed Rank DIMM
- PNCM: Processor Neptune Core Module
- Max.Temp.: Maximum ambient temperature at sea level
- E: entry
- U: ultra
- S: standard
- P: performance
- SW: single-wide
- DW: double-wide

Notes:
- For E3.S 2T CXL memory (CMM) rules, see "DDR5 RDIMMs mixed with CXL memory modules" on page 11.
- For specific supported configurations with 2.5"/3.5" front drive bays or E3.S front bays, see ***Internal Cable Routing Guide***.
- ThinkSystem Broadcom 57608 2x200/1x400GbE QSFP112 OCP Ethernet Adapter is supported only in configurations with performance fans.
- On servers without Compute Complex Neptune Core Module, ThinkSystem NVIDIA BlueField-3 VPI QSFP112 2P 200G PCIe Gen5 x16 B3220 is supported only in the following configurations:
  - standard configurations with performance fans (30°C or lower)
  - storage configurations with performance fans and 24 x 2.5" front drive bays or E3.S front bays and without middle or rear drive bays (25°C or lower)
  - GPU configurations with 8 x 2.5" AnyBay front drive bays or 0–4 E3.S backplanes (30°C or lower)
  - GPU configurations with 16 x 2.5" AnyBay front drive bays (25°C or lower)
- On servers with Compute Complex Neptune Core Module, ThinkSystem NVIDIA BlueField-3 VPI QSFP112 2P 200G PCIe Gen5 x16 B3220 is supported at a maximum temperature of 30°C.
- On air-cooled servers, a ConnectX-8 adapter used with ThinkSystem NDR/NDR200 QSFP112 IB Multi Mode Solo-Transceiver is supported in the following configurations:
  - standard configurations with performance fans (30°C or lower)
  - storage configurations with performance fans and 24 x 2.5" front drive bays or E3.S front bays and without middle or rear drive bays (25°C or lower)
  - GPU configurations with 8 x 2.5" or 16 x 2.5" AnyBay front drive bays or 0–4 E3.S backplanes (30°C or lower)
  - GPU configurations with 24 x 2.5" AnyBay front drive bays (25°C or lower)
- On servers with Processor Neptune Core Module, a ConnectX-8 adapter is supported in the following configurations:
  - standard configurations with performance fans (35°C or lower)
  - storage configurations with performance fans (30°C or lower)
  - GPU configurations with 8 x 2.5" or 16 x 2.5" front drive bays or 0–4 E3.S backplanes (35°C or lower)
  - GPU configurations with 24 x 2.5" or 8 x 3.5" front drive bays or 6/8 E3.S backplanes (30°C or lower)
- For servers without Compute Complex Neptune Core Module, make sure to install DIMM fillers in all empty DIMM slots in the following configurations :
  - configurations in which the CPU TDP is greater than or equal to 205 W
  - configurations with GPU adapters
  - configurations with middle drive bays
  - configurations with MRDIMMs or 3DS RDIMMs
- For servers with Compute Complex Neptune Core Module, make sure to install DIMM fillers in all empty DIMM slots in configurations with MRDIMMs or 3DS RDIMMs.
- For air-cooled servers equipped with any of the following parts, the ambient temperature is limited to 35°C or lower:
  - ThinkSystem Mellanox ConnectX-6 Lx 10/25GbE SFP28 2-port OCP/PCIe Ethernet Adapter
  - ThinkSystem Broadcom 57416 10GBASE-T 2-port OCP/PCIe Ethernet Adapter
  - ThinkSystem Mellanox ConnectX-6 Dx 100GbE QSFP56 2-port PCIe Ethernet Adapter
  - ThinkSystem Broadcom 57414 10/25GbE SFP28 2-port PCIe Ethernet Adapter V2
  - ThinkSystem Broadcom 57414 10/25GbE SFP28 2-port OCP Ethernet Adapter
  - ThinkSystem Broadcom 57504 10/25GbE SFP28 4-port PCIe/OCP Ethernet Adapter

  - ThinkSystem NVIDIA ConnectX-7 NDR200/200GbE QSFP112 2-port PCIe Gen5 x16 InfiniBand Adapter
  - ThinkSystem NVIDIA ConnectX-7 NDR400 OSFP 1-port PCIe Gen5 VPI Adapter
  - ThinkSystem Broadcom 57608 2x200/1x400GbE QSFP112 OCP/PCIe Ethernet Adapter
  - ThinkSystem Broadcom 57412 10GBASE-T 4-port OCP/PCIe Ethernet Adapter
  - ThinkSystem Nvidia ConnectX-6 Dx 100GbE QSFP56 2-port OCP Ethernet Adapter(Generic)
  - ThinkSystem Broadcom 57508 100GbE QSFP56 2-Port OCP Ethernet Adapter
  - ThinkSystem Broadcom 57508 100GbE QSFP56 2-port PCIe 4 Ethernet Adapter V2
  - ThinkSystem Intel E610-T2 10GBASE-T 2-port OCP Ethernet Adapter(Generic FW)
  - ThinkSystem Nvidia ConnectX-7 10/25GbE SFP28 4-Port PCIe Ethernet Adapter(Generic)
  - ThinkSystem NVIDIA ConnectX-8 8180 800Gbs XDR IB / 2x400GbE OSFP 1-port PCIe Gen6 x16 (Generic FW)
  - ThinkSystem NVIDIA ConnectX-8 8240 400GbE / 400Gb/s IB QSFP112 2-port PCIe Gen6 x16 (Generic FW)
  - Optical Transceiver, Accelink 10GBASE-SR SFP+ 850nm, 300m (OM3), DDM Transceiver Module
  - L1; 3M/10M 25G AOC
  - 25Gb Ethernet SFP28 Optic/Transceiver Gen 2
  - 10G SFP+ SR Optic (LC) Transceiver
  - ThinkSystem Finisar Dual Rate 10G/25G SR SFP28 Transceiver
  - 25GBase-SR transceiver
  - Lenovo Dual Rate 10G/25G SR SFP28 85C Transceiver
- For air-cooled servers equipped with any of the following parts, the ambient temperature is limited to 25°C or lower in configurations with 12 x 3.5" front drive bays and >= 300 W processors and limited to 30°C or lower in other configurations:
  - L1; 3M/5M/10M 100G AOC
  - Lenovo 15m/1m 100G QSFP28 Active Optical Cable
  - 5m/10m/20m Mellanox HDR IB to 2x HDR100 Splitter Optical QSFP56 Cable L1/SBB
  - 15m/3m Mellanox HDR IB to 2x HDR100 Splitter Optical QSFP56 Cable L1/SBB
  - Lenovo 10m 400G QSFP112 Active Optical Cable
  - ThinkSystem NDR OSFP400 IB Multi Mode Solo-Transceiver
  - 100GBase-SR4 QSFP28 Transceiver
  - 100G SR4 Optic/Transceiver Gen2
  - ThinkSystem NVIDIA BlueField-3 VPI QSFP112 2P 200G PCIe Gen5 x16 B3220
  - ThinkSystem NDR/NDR200 QSFP112 IB Multi Mode Solo-Transceiver
- For servers equipped with Compute Complex Neptune Core Module and any of the following parts, the ambient temperature is limited to 35°C or lower:
  - ThinkSystem Mellanox ConnectX-6 Lx 10/25GbE SFP28 2-port OCP/PCIe Ethernet Adapter
  - ThinkSystem Broadcom 57416 10GBASE-T 2-port OCP/PCIe Ethernet Adapter
  - ThinkSystem Mellanox ConnectX-6 Dx 100GbE QSFP56 2-port PCIe Ethernet Adapter
  - ThinkSystem Broadcom 57414 10/25GbE SFP28 2-port PCIe Ethernet Adapter V2
  - ThinkSystem Broadcom 57414 10/25GbE SFP28 2-port OCP Ethernet Adapter
  - ThinkSystem Broadcom 57504 10/25GbE SFP28 4-port PCIe/OCP Ethernet Adapter
  - ThinkSystem NVIDIA ConnectX-7 NDR200/200GbE QSFP112 2-port PCIe Gen5 x16 InfiniBand Adapter
  - ThinkSystem NVIDIA ConnectX-7 NDR400 OSFP 1-port PCIe Gen5 VPI Adapter
  - ThinkSystem Broadcom 57608 2x200/1x400GbE QSFP112 OCP/PCIe Ethernet Adapter
  - ThinkSystem Broadcom 57412 10GBASE-T 4-port OCP/PCIe Ethernet Adapter
  - ThinkSystem Nvidia ConnectX-6 Dx 100GbE QSFP56 2-port OCP Ethernet Adapter(Generic)
  - ThinkSystem Broadcom 57508 100GbE QSFP56 2-Port OCP Ethernet Adapter
  - ThinkSystem Broadcom 57508 100GbE QSFP56 2-port PCIe 4 Ethernet Adapter V2
  - ThinkSystem Intel E610-T2 10GBASE-T 2-port OCP Ethernet Adapter(Generic FW)
  - ThinkSystem Nvidia ConnectX-7 10/25GbE SFP28 4-Port PCIe Ethernet Adapter(Generic)
  - ThinkSystem NVIDIA ConnectX-8 8180 800Gbs XDR IB / 2x400GbE OSFP 1-port PCIe Gen6 x16 (Generic FW)

- ThinkSystem NVIDIA ConnectX-8 8240 400GbE / 400Gb/s IB QSFP112 2-port PCIe Gen6 x16 (Generic FW)
- Optical Transceiver, Accelink 10GBASE-SR SFP+ 850nm, 300m (OM3), DDM Transceiver Module
- L1; 3M/10M 25G AOC
- 25Gb Ethernet SFP28 Optic/Transceiver Gen 2
- 10G SFP+ SR Optic (LC) Transceiver
- ThinkSystem Finisar Dual Rate 10G/25G SR SFP28 Transceiver
- 25GBase-SR transceiver
- Lenovo Dual Rate 10G/25G SR SFP28 85C Transceiver
- L1; 3M/5M/10M 100G AOC
- Lenovo 15m/1m 100G QSFP28 Active Optical Cable
- 5m/10m/20m Mellanox HDR IB to 2x HDR100 Splitter Optical QSFP56 Cable L1/SBB
- 15m/3m Mellanox HDR IB to 2x HDR100 Splitter Optical QSFP56 Cable L1/SBB
- Lenovo 10m 400G QSFP112 Active Optical Cable
- ThinkSystem NDR OSFP400 IB Multi Mode Solo-Transceiver
- 100GBase-SR4 QSFP28 Transceiver
- 100G SR4 Optic/Transceiver Gen2

Standard configurations

This section provides thermal information for standard configurations.

- Table 10 “Standard configurations with 2.5"/3.5" front drive bays” on page 20
- Table 11 “Standard configurations with E3.S front bays” on page 20

Table 10. Standard configurations with 2.5"/3.5" front drive bays

Front drive bays	Max. Temp.	CPU TDP (W)	Heat sink	Air baffle	Fan type	DIMM	
						RDIMM (up to 32)	MRDIMM (up to 16)
8 x 2.5" 16 x 2.5" Backplane-less (2.5"/ 3.5")	45°C	<= 185	T-shape (P)	S	P	<= 64 GB	N/A
	40°C	190 <= TDP <= 205	T-shape (P)	S	P	<= 64 GB	N/A
	35°C	<= 205	2U (E)	S	S	<= 128 GB	N/A
	35°C	<= 205	2U (E)	S	P	All supported	
	35°C	> 205	2U (S)	S	S	<= 128 GB	N/A
	35°C	> 205	2U (S)	S	P	All supported	
	30°C	<= 205	2U (E)	S	S	All supported	
	30°C	> 205	2U (S)	S	S	All supported	
	35°C	All supported	PNCM	S	S	<= 128 GB	N/A
	35°C		PNCM	S	P	All supported	
	30°C		PNCM	S	S	All supported	

Table 11. Standard configurations with E3.S front bays

BP Qty.	Max. Temp.	CPU TDP (W)	Heat sink	Air baffle	Fan type	DIMM	
						RDIMM (up to 32)	MRDIMM (up to 16)
0/1/2/3/4	35°C	<= 205	2U (E)	S	P	All supported	
	35°C	> 205	2U (S)	S	P		
	35°C	All supported	PNCM	S	S	<= 128 GB	N/A
	35°C		PNCM	S	P	All supported	
	30°C		PNCM	S	S	All supported	

Storage configurations

This section provides thermal information for storage configurations.

- Table 12 “Storage configurations with 24 x 2.5" front drive bays” on page 21
- Table 13 “Storage configurations with 12 x 3.5" front drive bays” on page 21
- Table 14 “Storage configurations with E3.S front bays” on page 22

Table 12. Storage configurations with 24 x 2.5" front drive bays

Middle drive bays	Rear drive bays	Max. Temp.	CPU TDP (W)	Heat sink	Air baffle	Fan type	DIMM	
							RDIMM (up to 32)	MRDIMM (up to 16)
N/A	N/A	35°C	<= 205	2U (E)	S	S	<= 32 GB	N/A
		30°C	<= 205	2U (E)	S	S	<= 64 GB	N/A
		35°C	<= 205	2U (E)	S	P	<= 128 GB	N/A
		30°C	<= 205	2U (E)	S	P	All supported	
		35°C	> 205	2U (S)	S	P	<= 128 GB	N/A
		30°C	> 205	2U (S)	S	P	All supported	
N/A	4 x 2.5" S/S 8 x 2.5" S/S 4 x 2.5" NV	30°C	<= 205	2U (E)	S	P	All supported	
		30°C	> 205	2U (S)	S	P	All supported	
N/A	N/A	35°C	All supported	PNCM	S	S	<= 96 GB	N/A
	4 x 2.5" S/S 8 x 2.5" S/S 4 x 2.5" NV	35°C		PNCM	S	P	<= 128 GB	N/A
		30°C		PNCM	S	P	All supported	
8 x 2.5" NVMe	N/A	30°C	All supported	T-shape (P)	N/A	P	All supported	
		35°C		PNCM	N/A	S	<= 96 GB	N/A
		35°C		PNCM	N/A	P	<= 128 GB	N/A
		30°C		PNCM	N/A	P	All supported	
8 x 2.5" S/S	4 x 2.5" S/S 8 x 2.5" S/S	30°C	All supported	T-shape (P)	N/A	P	All supported	
		35°C		PNCM	N/A	S	<= 96 GB	N/A
		35°C		PNCM	N/A	P	<= 128 GB	N/A
		30°C		PNCM	N/A	P	All supported	
8 x 2.5" NV	4 x 2.5" NV	30°C	All supported	T-shape (P)	N/A	U	All supported	
		25°C		T-shape (P)	N/A	P	All supported	
		35°C		PNCM	N/A	P	<= 128 GB	N/A
		30°C		PNCM	N/A	P	All supported	
		30°C		PNCM	N/A	S	<= 96 GB	N/A

Table 13. Storage configurations with 12 x 3.5" front drive bays

Middle drive bays	Rear drive bays	Max. Temp.	CPU TDP (W)	Heat sink	Air baffle	Fan type	DIMM	
							RDIMM (up to 32)	MRDIMM (up to 16)
N/A	N/A	35°C	<= 205	2U (E)	S	S	<= 32 GB	N/A
		35°C	<= 205	2U (E)	S	P	<= 128 GB	N/A
		30°C	<= 205	2U (E)	S	S	<= 64 GB	N/A
		30°C	<= 205	2U (E)	S	P	All supported	

Table 13. Storage configurations with 12 x 3.5" front drive bays (continued)

Middle drive bays	Rear drive bays	Max. Temp.	CPU TDP (W)	Heat sink	Air baffle	Fan type	DIMM	
							RDIMM (up to 32)	MRDIMM (up to 16)
		35°C	> 205	2U (S)	S	P	<= 128 GB	N/A
		30°C	> 205	2U (S)	S	P	All supported	
		35°C	All supported	PNCM	S	S	<= 64 GB	N/A
		35°C		PNCM	S	P	<= 128 GB	N/A
		30°C		PNCM	S	P	All supported	
		25°C		PNCM	S	S	All supported	
N/A	4 x 3.5" S/S 4 x 2.5" NV	30°C	<= 205	2U (E)	S	P	All supported	
		30°C	> 205	2U (S)	S	P	All supported	
		35°C	All supported	PNCM	S	P	<= 128 GB	N/A
		30°C		PNCM	S	P	All supported	
8 x 2.5" NV	N/A	30°C	All supported	T-shape (P)	N/A	P	All supported	
		35°C		PNCM	N/A	S	<= 64 GB	N/A
		35°C		PNCM	N/A	P	<= 128 GB	N/A
		30°C		PNCM	N/A	P	All supported	
		25°C		PNCM	N/A	S	All supported	

Table 14. Storage configurations with E3.S front bays

BP Qty.	Max. Temp.	CPU TDP (W)	Heat sink	Air baffle	Fan type	DIMM	
						RDIMM (up to 32)	MRDIMM (up to 16)
6/8	35°C	<= 205	2U (E)	S	P	<= 128 GB	N/A
	30°C	<= 205	2U (E)	S	P	All supported	
	35°C	> 205	2U (S)	S	P	<= 128 GB	N/A
	30°C	> 205	2U (S)	S	P	All supported	
8	35°C	All supported	PNCM	S	P	<= 128 GB	N/A
	30°C	All supported	PNCM	S	P	All supported	

GPU configurations

This section provides thermal information for GPU configurations.

- Table 15 “GPU configurations with 2.5"/3.5" front drive bays” on page 23
- Table 16 “GPU configurations with E3.S front bays” on page 23

The server supports the following GPU adapters:

- FHFL DW GPU adapters: RTX 6000 Ada, RTX 4500 Ada, H100 NVL, L40S
- FHFL SW GPU adapter: RTX 4500 Ada
- HHHL SW GPU adapter: L4

Note: In GPU configurations, MRDIMMs and 256 GB 3DS RDIMMs are supported only when the ambient temperature is 30°C or lower.

Table 15. GPU configurations with 2.5"/3.5" front drive bays

Front drive bays	Max. Temp.	CPU TDP (W)	Heat sink	Air baffle	Fan type	Max. GPU Qty.		
						HHHL SW	FHFL SW	DW
8 x 2.5" 16 x 2.5" 24 x 2.5"	35°C	<= 205	2U (E)	S	P	10	N/A	N/A
		> 205	2U (S)	S	P	10	N/A	N/A
		All supported	T-shape (P)	GPU	P	N/A	4	2
Backplane-less (2.5") 8 x 3.5"	35°C	All supported	PNCM	S	P	9	N/A	N/A
			PNCM	GPU	P	N/A	4	2

Table 16. GPU configurations with E3.S front bays

BP Qty.	Max. Temp.	CPU TDP (W)	Heat sink	Air baffle	Fan type	Max. GPU Qty.		
						HHHL SW	FHFL SW	DW
0/1/2/3/4	35°C (U fans) 30°C (P fans)	<= 205	2U (E)	S	U/P	10	N/A	N/A
		> 205	2U (S)	S	U/P	10	N/A	N/A
		All supported	T-shape (P)	GPU	U/P	N/A	4	2
	35°C	All supported	PNCM	S	P	9	N/A	N/A
			PNCM	GPU	P	N/A	4	2
6/8	35°C (U fans) 30°C (P fans)	<= 205	2U (E)	S	U/P	2	N/A	N/A
		> 205	2U (S)	S	U/P	2	N/A	N/A
	35°C	All supported	PNCM	S	P	2	N/A	N/A

Configurations with Compute Complex Neptune Core Module

This section provides thermal information for configurations with Compute Complex Neptune Core Module.

Note: In configurations with Compute Complex Neptune Core Module, processor 6732P is not supported in the 0.5 LPM 40°C inlet water condition.

Front drive bays	Max. Temp.	CPU TDP (W)	Air baffle	Fan type	Max. DIMM Qty.
8 x 2.5" 16 x 2.5" 16 x E3.S 1T 8 x E3.S 2T	35°C	All supported	S	S	16

Multi-server configurations

See this section to learn how to route cables for multi-server configuration.

Multi-server configuration

Multiple servers within or across chassis could be connected with Ethernet cables as illustrated.

Notes:

- For multi-server configuration, make sure to install a **ThinkSystem OCP 4 to 1 Management Port Consolidation Adapter** and set **UEFI setup → BMC settings → Network Settings → Network Interface port** to **Uplink MAC** on the server with the adapter installed.
- All ThinkSystem servers supporting ThinkSystem OCP 4 to 1 Management Port Consolidation Adapter can be chained in multi-server configurations through the adapter.
- For ThinkSystem SR650 V4, ThinkSystem OCP 4 to 1 Management Port Consolidation Adapter is supported in OCP slot 1. When the adapter is installed, OCP slot 2 is not supported.
- For optimized efficiency, install the required OCP module as illustrated.

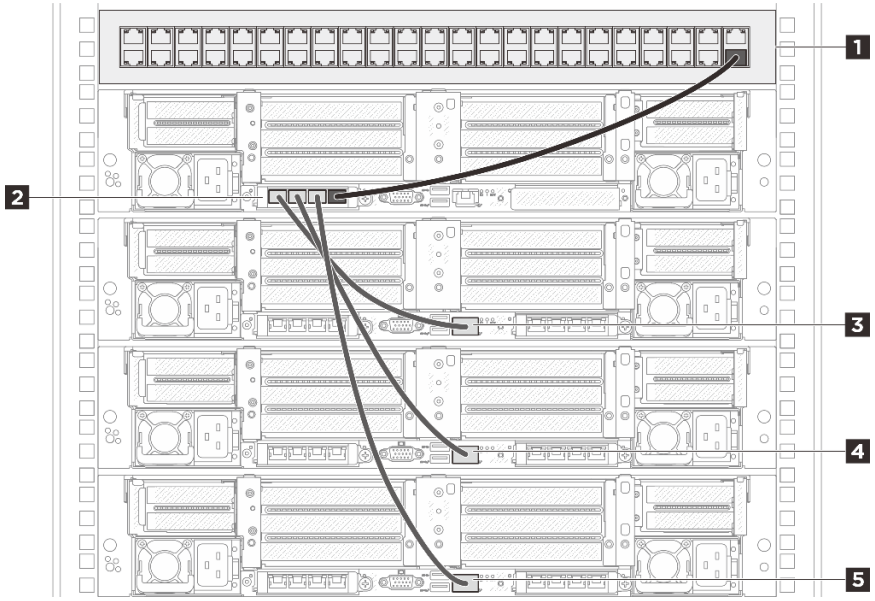

Figure 14. Multi-server configuration

1 Rack switch	
2 ThinkSystem OCP 4 to 1 Management Port Consolidation Adapter installed on Server 1	3 XCC system management port on Server 2
	4 XCC system management port on Server 3
	5 XCC system management port on Server 4

Notes

Notes:

1. The chained servers do not necessarily have to be installed in the same rack, and could be connected cross-rack via rack switch. See the illustration for an example.

   An example of cross-rack server chain

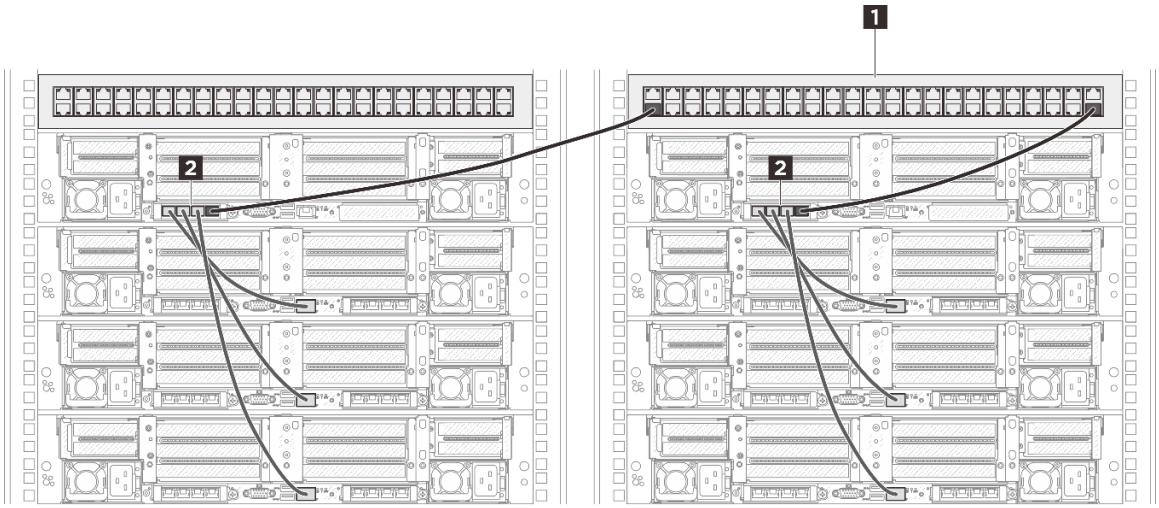

1 Rack switch
2 ThinkSystem OCP 4 to 1 Management Port Consolidation Adapter

2. Do not create any switch loop by connecting more than one ports on the same OCP module to the switch.

   An example of connection that should be avoided

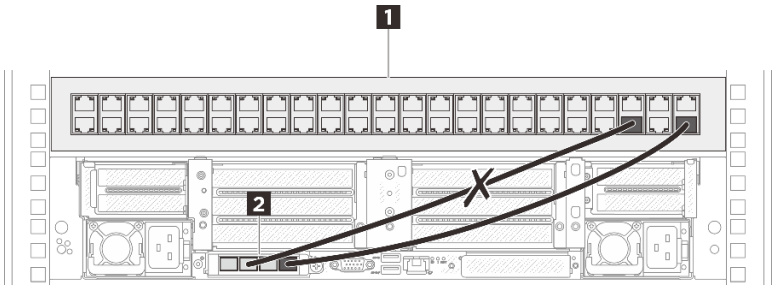

1 Rack switch
2 ThinkSystem OCP 4 to 1 Management Port Consolidation Adapter

3. Do not create any series connection among servers by connecting one OCP module to another OCP module. Each OCP module for the multiple server configuration must be directly connected to the rack switch.

   An example of connection that should be avoided

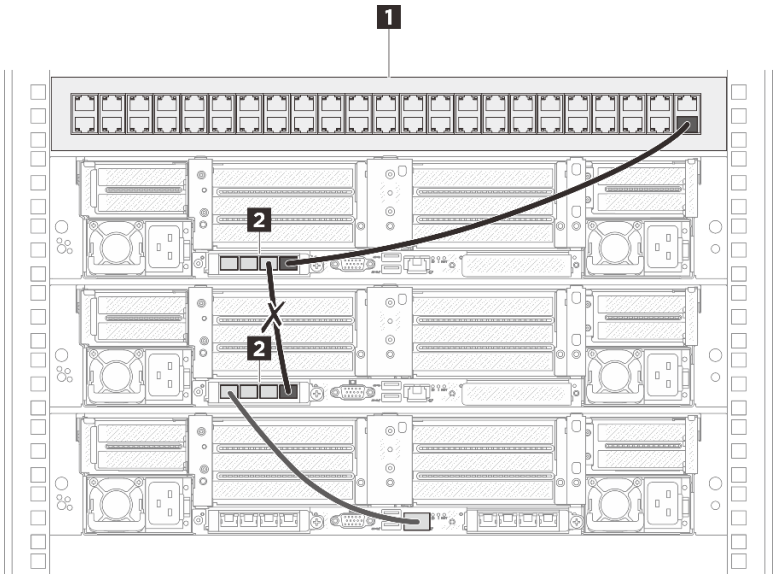

1 Rack switch
2 ThinkSystem OCP 4 to 1 Management Port Consolidation Adapter

4. If Network Interface port is not set to **Uplink MAC** in UEFI (as described in the note), the multi-server configuration could still work by connecting the servers as the illustration below. It is recommended to select **Uplink MAC** for optimized efficiency.

   An example of connection without selecting Uplink MAC

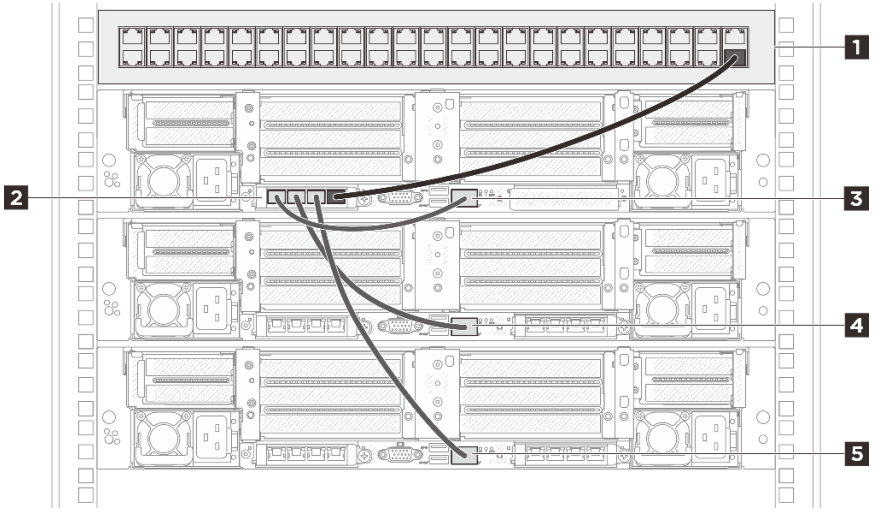

1 Rack switch	
2 ThinkSystem OCP 4 to 1 Management Port Consolidation Adapter installed on Server 1	**3 XCC system management port on Server 1**
	4 XCC system management port on Server 2
	5 XCC system management port on Server 3

Power on and power off the server

Follow the instructions in this section to power on and power off the server.

Power on the server

After the server performs a short self-test (power status LED flashes quickly) when connected to input power, it enters a standby state (power status LED flashes once per second).

Power button location and power status LED locations are specified in:
- “Server components” in *User Guide* or *System Configuration Guide*
- “Troubleshooting by system LEDs and diagnostics display” in *User Guide*

The server can be turned on (power status LED on) in any of the following ways:
- You can press the power button.
- The server can restart automatically after a power interruption.
- The server can respond to remote power-on requests sent to the Lenovo XClarity Controller.

Important: Lenovo XClarity Controller (XCC) supported version varies by product. All versions of Lenovo XClarity Controller are referred to as Lenovo XClarity Controller and XCC in this document, unless specified otherwise. To see the XCC version supported by your server, go to https://pubs.lenovo.com/lxcc-overview/.

For information about powering off the server, see “Power off the server” on page 27.

Power off the server

The server remains in a standby state when it is connected to a power source, allowing the Lenovo XClarity Controller to respond to remote power-on requests. To remove all power from the server (power status LED off), you must disconnect all power cables.

Power button location and power status LED locations are specified in:
- “Server components” in *User Guide* or *System Configuration Guide*
- “Troubleshooting by system LEDs and diagnostics display” in *User Guide*

To place the server in a standby state (power status LED flashes once per second):

Note: The Lenovo XClarity Controller can place the server in a standby state as an automatic response to a critical system failure.

- Start an orderly shutdown using the operating system (if supported by your operating system).
- Press the power button to start an orderly shutdown (if supported by your operating system).
- Press and hold the power button for more than 4 seconds to force a shutdown.

When in a standby state, the server can respond to remote power-on requests sent to the Lenovo XClarity Controller. For information about powering on the server, see “Power on the server” on page 27.

Rail replacement

Follow the instructions in this section to remove and install rails.

- “Remove the rails from the rack” on page 28
- “Install the rails to the rack” on page 29

Remove the rails from the rack

Follow the instructions in this section to remove the rails from the rack.

About this task

Attention:

- Read “Installation Guidelines” on page 1 and “Safety inspection checklist” on page 2 to ensure that you work safely.
- Power off the server and peripheral devices and disconnect the power cords and all external cables. See “Power off the server” on page 27.
- Prevent exposure to static electricity, which might lead to system halt and loss of data, by keeping static-sensitive components in their static-protective packages until installation, and handling these devices with an electrostatic-discharge wrist strap or other grounding system.

Procedure

Step 1. Remove the server from the rack. See “Server replacement” on page 34.

Step 2. Remove the M6 screws installed on the rear of the rails.

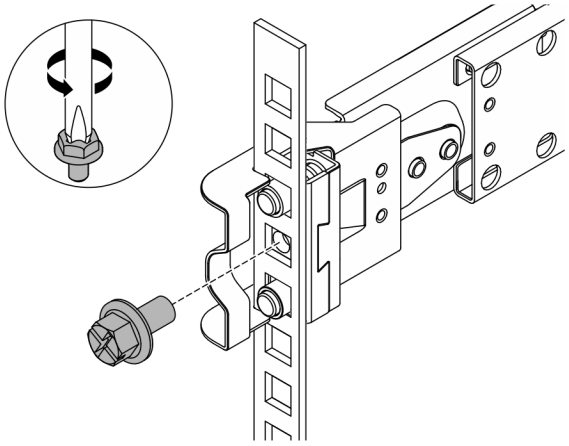

Figure 15. Removing the M6 screw

Step 3. Remove the rails from the rack.

a. Remove the front mounting pins from the rack.

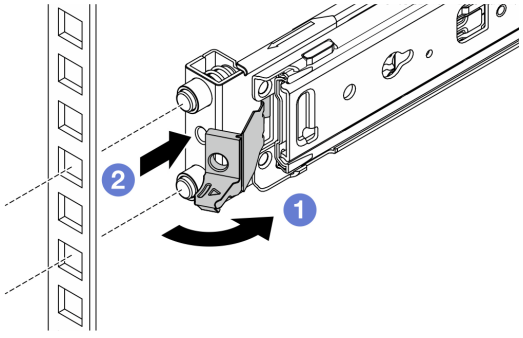

Figure 16. Removing the front mounting pins

1. Open and hold the front latch to disengage the front end of the rail.
2. Push the rail forward and remove it from the rack.

b. Remove the rear mounting pins from the rack.

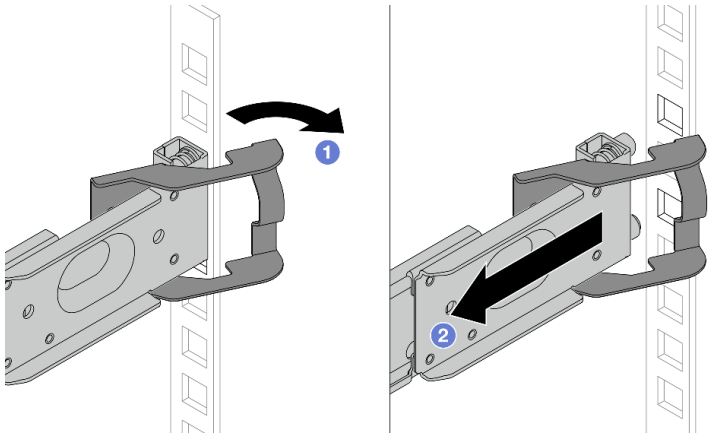

Figure 17. Removing the rear mounting pins

1. Open and hold the rear latch to disengage the rear end of the rail.
2. Remove the rail from the rear mounting flanges.

After you finish

Install a replacement unit. See the instructions in *Rail Installation Guide* that comes with the rail kit. For more information, see ThinkSystem rack server rail options.

Install the rails to the rack

Follow the instructions in this section to install the rails to the rack.

- "Install the rails to the rack (friction rail)" on page 29
- "Install the rails to the rack (slide rail)" on page 32

Install the rails to the rack (friction rail)

Follow the instructions in this section to install ThinkSystem Toolless Friction Rail Kit V4 to the rack.

S036



18 - 32 kg (39 - 70 lb)



32 - 55 kg (70 - 121 lb)

CAUTION:
Use safe practices when lifting.

R006



CAUTION:
Do not place any object on top of a rack-mounted device unless that rack-mounted device is intended for use as a shelf.

CAUTION:

- **Potential stability hazards exist. The rack might tip over and cause serious personal injury.**
- **Before extending the rack to the installation position, read the "Installation Guidelines" on page 1. Do not put any load on the slide-rail mounted equipment in the installation position. Do not leave the slide-rail mounted equipment in the installation position.**

About this task

Attention:

- Read "Installation Guidelines" on page 1 and "Safety inspection checklist" on page 2 to ensure that you work safely.
- Power off the server and peripheral devices and disconnect the power cords and all external cables. See "Power off the server" on page 27.
- Prevent exposure to static electricity, which might lead to system halt and loss of data, by keeping static-sensitive components in their static-protective packages until installation, and handling these devices with an electrostatic-discharge wrist strap or other grounding system.

CAUTION:
Make sure to have three people operate the server installation procedures to prevent injury.

Procedure

Step 1. Install the rear mounting pins to the rack.

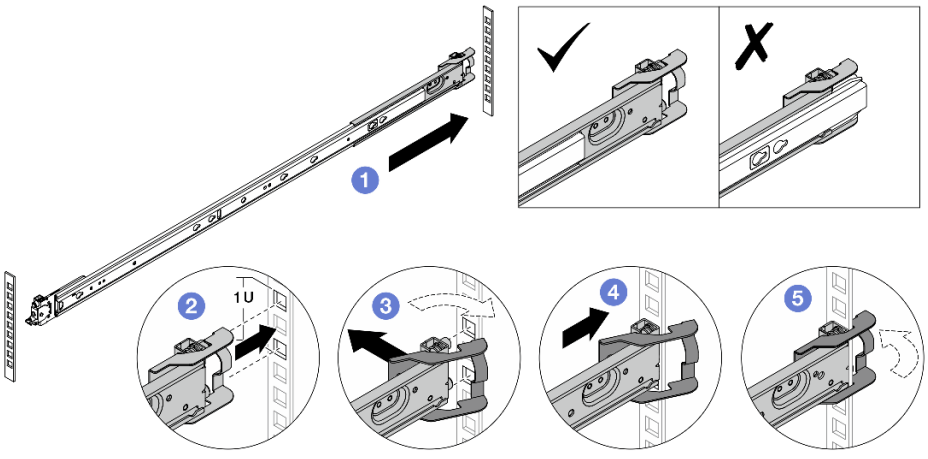

Figure 18. Installing rear mounting pins

a. 1 Extend the outer rail toward the rear mounting flanges in the rack.

b. 2 Align the mounting pins with the rear mounting flanges and set the opening of the rear latch against the rack frame.

c. 3 Push the rail toward outside of the rack until the rear latch opens.

d. 4 Push the rail toward the rear mounting flanges.

e. 5 Rotate the rear latch back to the closed position.

Step 2. Install the front mounting pins to the rack.

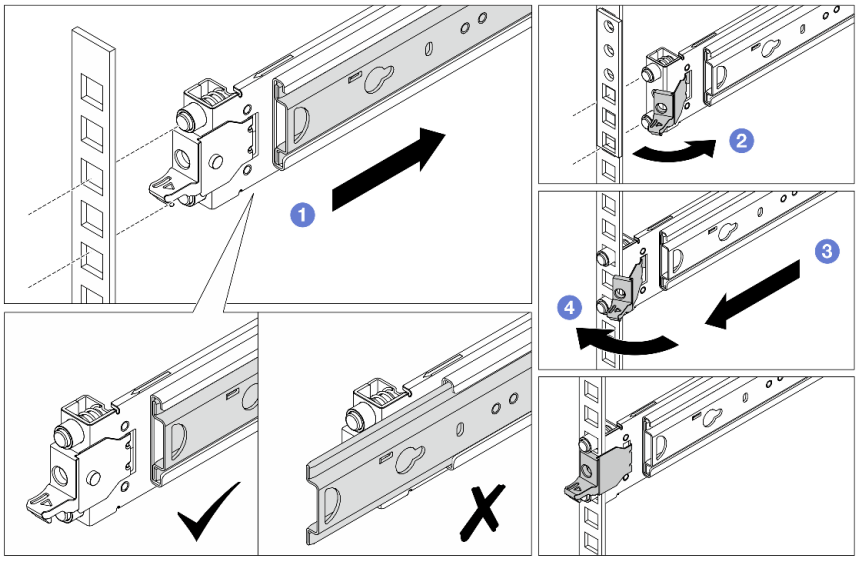

Figure 19. Installing front mounting pins

a. 1 Slide the inner rail all the way in to allow the front latch to open.

b. 2 Open the front latch and align the mounting pins with corresponding front mounting flanges.

c. 3 Pull the rail forward until the mounting pins go through the holes.

d. 4 Release the front latch to secure the rail to the rack.

Step 3. Make sure that the rail is securely engaged in the flange holes by inspecting that the hook has caught and by sliding back and forward to ensure the rail does not pop out.

Important: Make sure both ends of the rail are seated at the same height.

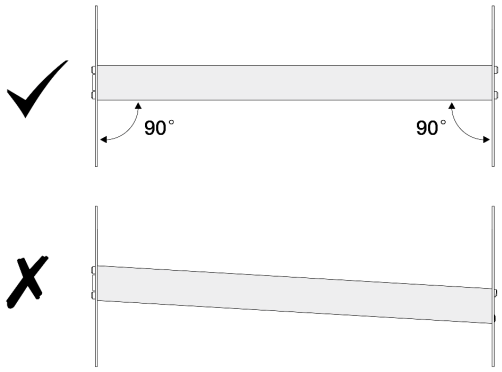

Step 4. Repeat Step 1 on page 30 to Step 3 on page 31 to install the other rail.

Step 5. Install the server to the rack. See “Install the server to the rack (friction rails)” on page 38.

Install the rails to the rack (slide rail)

Follow the instructions in this section to install ThinkSystem Toolless Slide Rail Kit V4 and ThinkSystem Advanced Toolless Slide Rail Kit V4 to the rack.

S036



18 - 32 kg (39 - 70 lb)



32 - 55 kg (70 - 121 lb)

CAUTION:
Use safe practices when lifting.

R006



CAUTION:
Do not place any object on top of a rack-mounted device unless that rack-mounted device is intended for use as a shelf.

CAUTION:

- **Potential stability hazards exist. The rack might tip over and cause serious personal injury.**
- **Before extending the rack to the installation position, read the “Installation Guidelines” on page 1. Do not put any load on the slide-rail mounted equipment in the installation position. Do not leave the slide-rail mounted equipment in the installation position.**

About this task

Attention:

- Read “Installation Guidelines” on page 1 and “Safety inspection checklist” on page 2 to ensure that you work safely.
- Power off the server and peripheral devices and disconnect the power cords and all external cables. See “Power off the server” on page 27.
- Prevent exposure to static electricity, which might lead to system halt and loss of data, by keeping static-sensitive components in their static-protective packages until installation, and handling these devices with an electrostatic-discharge wrist strap or other grounding system.

CAUTION:
Make sure to have three people operate the server installation procedures to prevent injury.

Procedure

Step 1. Install the rear mounting pins to the rack.

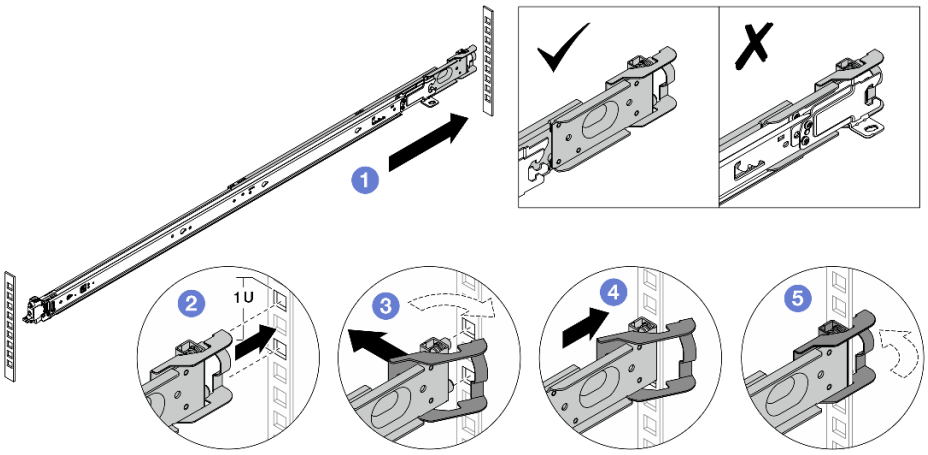

Figure 20. Installing rear mounting pins

a. 1 Extend the outer rail toward the rear mounting flanges in the rack.

b. 2 Align the mounting pins with the rear mounting flanges and set the opening of the rear latch against the rack frame.

c. 3 Push the rail toward outside of the rack until the rear latch opens.

d. 4 Push the rail toward the rear mounting flanges.

e. 5 Rotate the rear latch back to the closed position.

Step 2. Install the front mounting pins to the rack.

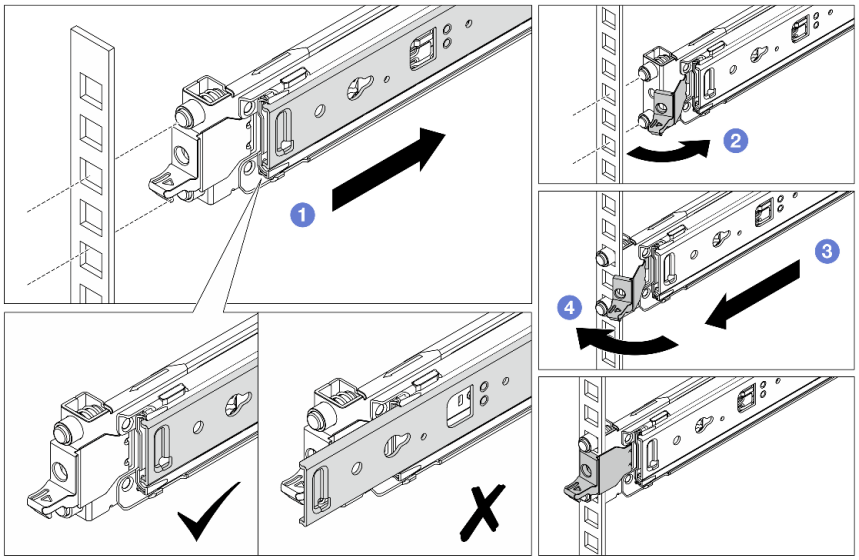

Figure 21. Installing front mounting pins

a. 1 Slide the inner rail all the way in to allow the front latch to open.

b. Open the front latch and align the mounting pins with corresponding front mounting flanges.

c. Pull the rail forward until the mounting pins go through the holes.

d. Release the front latch to secure the rail to the rack.

Step 3. Make sure that the rail is securely engaged in the flange holes by inspecting that the hook has caught and by sliding back and forward to ensure the rail does not pop out.

Important: Make sure both ends of the rail are seated at the same height.

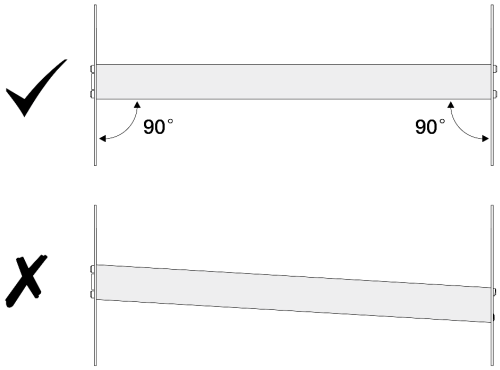

Step 4. Repeat Step 1 on page 33 to Step 3 on page 34 to install the other rail.

Step 5. Install the server to the rack. See “Install the server to the rack (slide rails)” on page 46.

Server replacement

Follow the instructions in this section to remove and install the server.

- “Remove the server from the rack (friction rails)” on page 34
- “Install the server to the rack (friction rails)” on page 38
- “Remove the server from the rack (slide rails)” on page 43
- “Install the server to the rack (slide rails)” on page 46

Remove the server from the rack (friction rails)

Follow the instructions in this section to remove the server from the rack equipped with friction rails.

S036



18 - 32 kg (39 - 70 lb)



32 - 55 kg (70 - 121 lb)

CAUTION:
Use safe practices when lifting.

R006

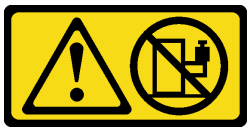

CAUTION:
Do not place any object on top of a rack-mounted device unless that rack-mounted device is intended for use as a shelf.

CAUTION:

- **Potential stability hazards exist. The rack might tip over and cause serious personal injury.**
- **Before extending the rack to the installation position, read the "Installation Guidelines" on page 1. Do not put any load on the slide-rail mounted equipment in the installation position. Do not leave the slide-rail mounted equipment in the installation position.**

About this task

Attention:

- Read "Installation Guidelines" on page 1 and "Safety inspection checklist" on page 2 to ensure that you work safely.
- Power off the server and peripheral devices and disconnect the power cords and all external cables. See "Power off the server" on page 27.
- Prevent exposure to static electricity, which might lead to system halt and loss of data, by keeping static-sensitive components in their static-protective packages until installation, and handling these devices with an electrostatic-discharge wrist strap or other grounding system.

CAUTION:
Make sure to have three people operate the server removal procedures to prevent injury.

Procedure

Step 1. Loosen the two screws located on the rack latches to disengage it from the rack.

Rack front

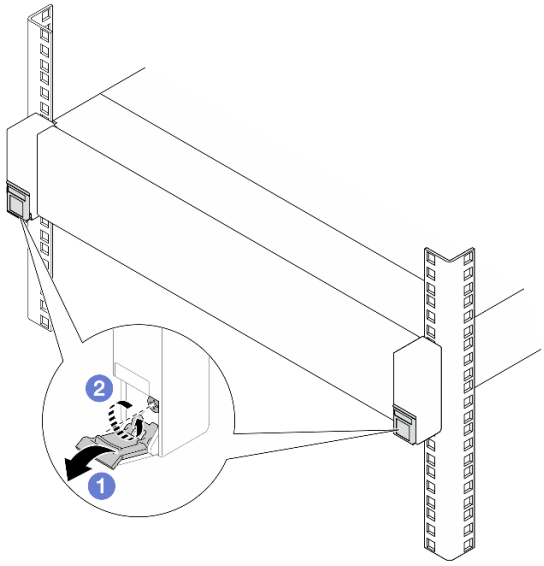

Figure 22. Loosening screws in rack latches

a. 1 Flip down the covers on the rack latches.

b. 2 Loosen the screws that secure the server.

Step 2. Slide the server all the way out until it stops and remove it from the outer rails.

CAUTION:
Make sure three people are lifting the sever by holding the 1 lift points.

Rack front

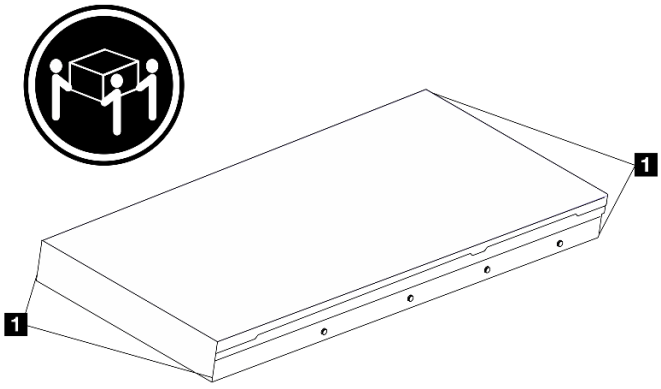

Figure 23. Lifting up the server

Rack Front

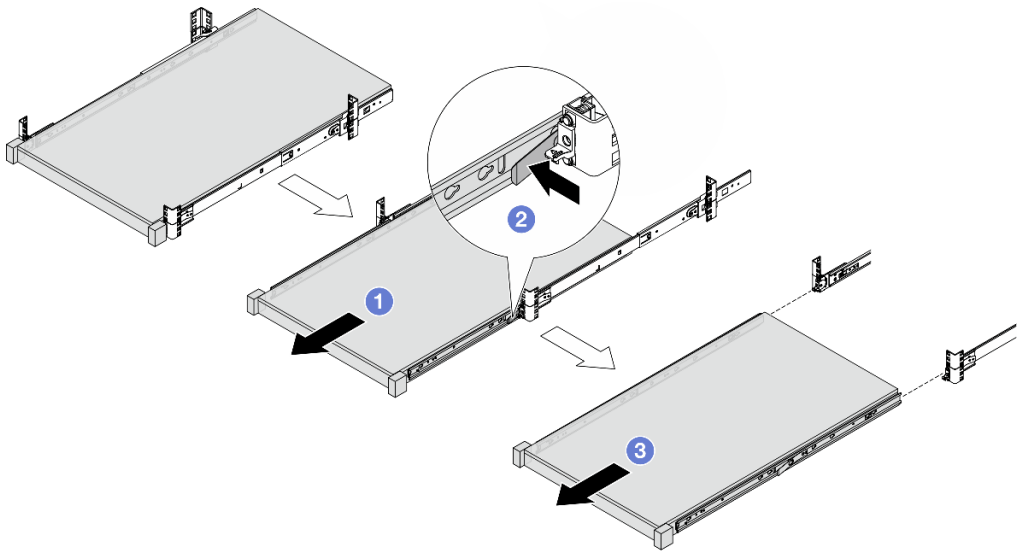

Figure 24. Removing the server

a. 1 Slide the server out until the release latches are accessible.

b. 2 Press the release latches.

c. 3 With three people, slide the server out to remove it from the outer rails. Place the server on a flat and sturdy surface.

Step 3. Remove the inner rails from the server.

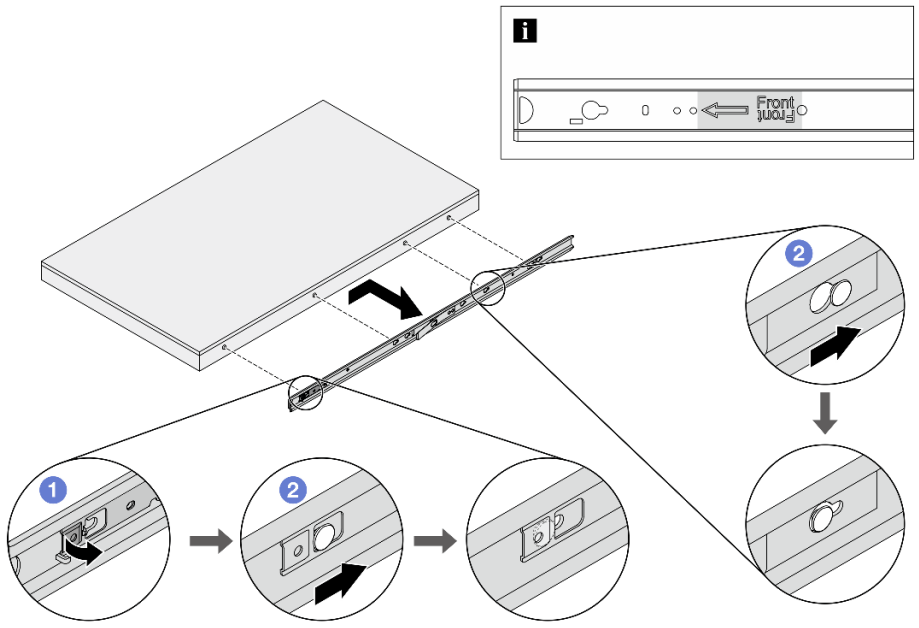

Figure 25. Removing the inner rails

a. (1) Flip the touch point to unlock the inner rail.

b. (2) Push the inner rail backwards until the T-pins on the server disengaged from the inner rail.

Step 4. Repeat the previous step to the other rail.

After you finish

Carefully lay the server on a flat, static-protective surface.

Install the server to the rack (friction rails)

Follow the instructions in this section to install the server to the rack equipped with friction rails.

S036



18 - 32 kg (39 - 70 lb)



32 - 55 kg (70 - 121 lb)

CAUTION:
Use safe practices when lifting.

R006



CAUTION:
Do not place any object on top of a rack-mounted device unless that rack-mounted device is intended for use as a shelf.

CAUTION:

- **Potential stability hazards exist. The rack might tip over and cause serious personal injury.**
- **Before extending the rack to the installation position, read the "Installation Guidelines" on page 1. Do not put any load on the slide-rail mounted equipment in the installation position. Do not leave the slide-rail mounted equipment in the installation position.**

About this task

Attention:

- Read "Installation Guidelines" on page 1 and "Safety inspection checklist" on page 2 to ensure that you work safely.
- Power off the server and peripheral devices and disconnect the power cords and all external cables. See "Power off the server" on page 27.
- Prevent exposure to static electricity, which might lead to system halt and loss of data, by keeping static-sensitive components in their static-protective packages until installation, and handling these devices with an electrostatic-discharge wrist strap or other grounding system.

CAUTION:
Make sure to have three people operate the server installation procedures to prevent injury.

Procedure

Step 1. From the front of the rack, pull the rails all the way out until they stop and remove the inner rails.

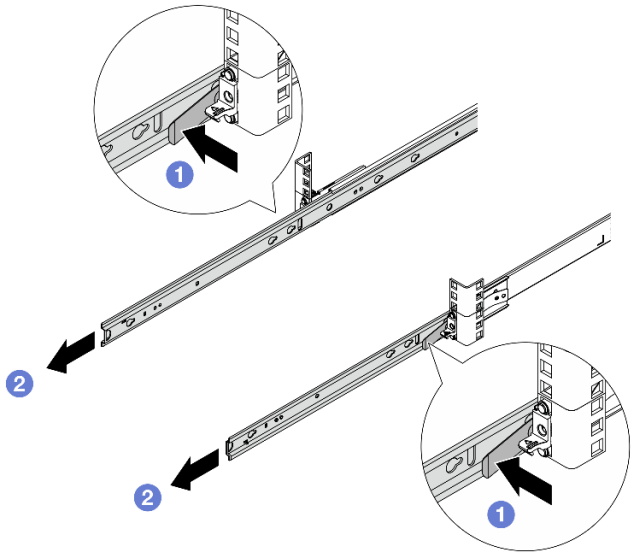

Figure 26. Removing the inner rails

a. 1 Press the release latches.
b. 2 Disengage the inner rails from the outer rails.

Step 2. Install the inner rail to the server.

Note: Make sure that the stamp “Front” always faces toward the front when assembling the inner rails to the server.

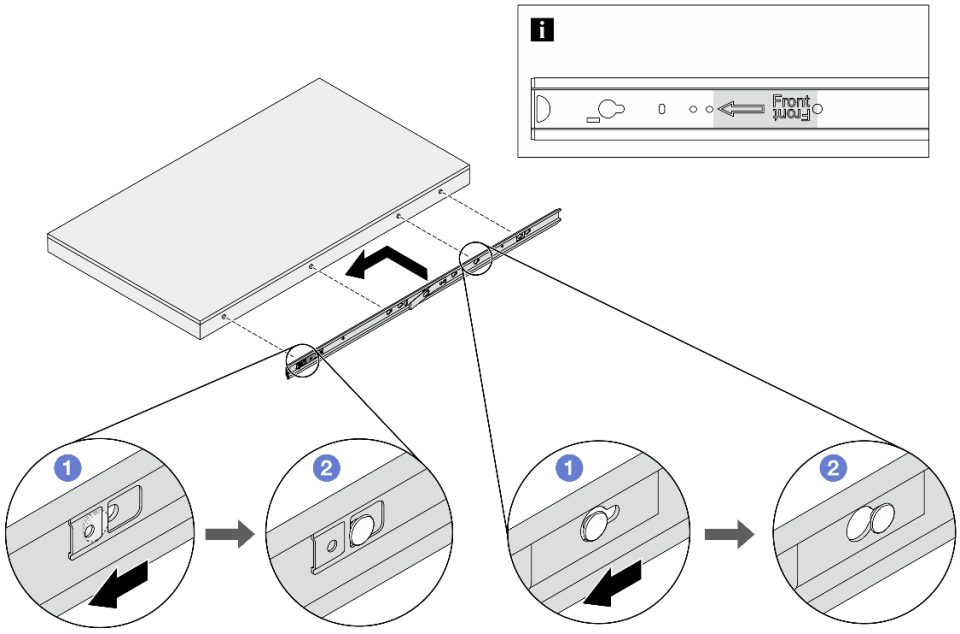

Figure 27. Installing the inner rails

a. 1 Align the slots on the inner rail with the corresponding T-pins on the side of the server.

b. 2 Slide the inner rail forwards until the T-pins lock into place.

Step 3. Repeat the previous step to the other rail.

Step 4. Carefully lift up the server with three people.

CAUTION:
Make sure three people are lifting the sever by holding the 1 lift points.

Rack front

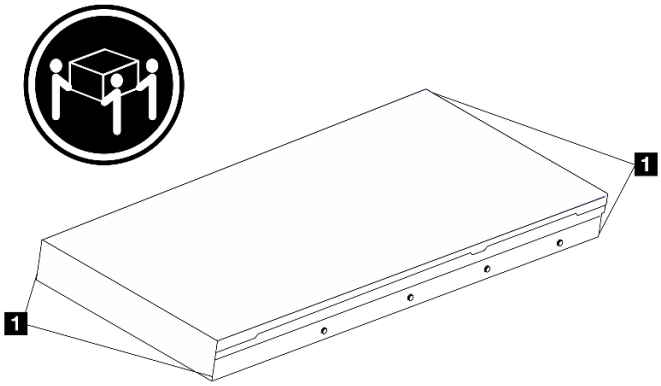

Figure 28. Lifting up the server

Step 5. From the front of the rack, install the server into the outer rails.

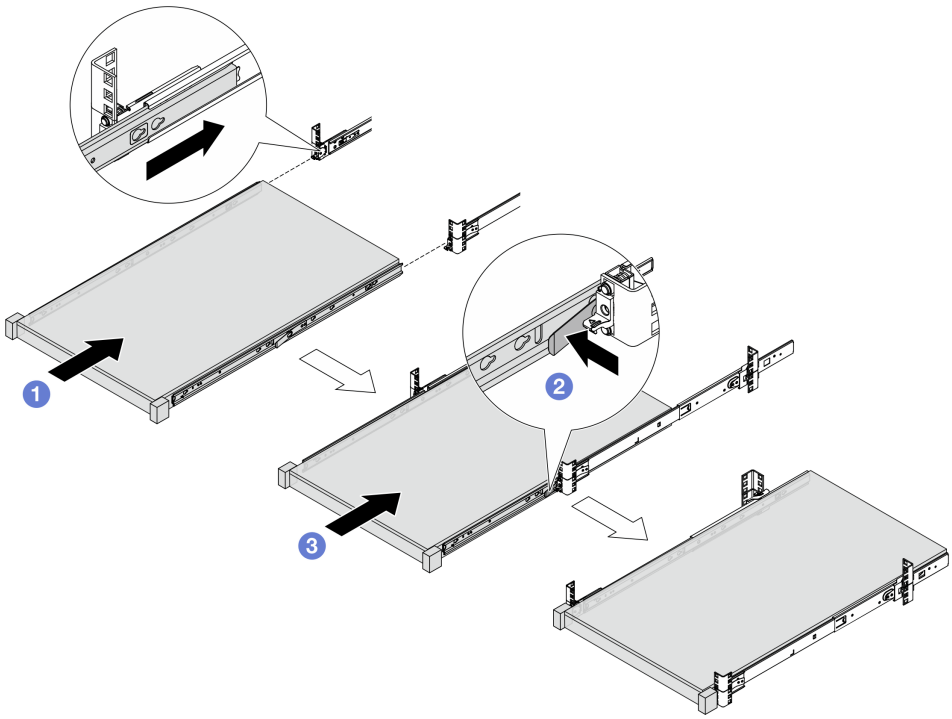

Figure 29. Installing the server

a. 1 Align the rail slots and push the server into the rack.

b. 2 Press the release latches.

c. 3 Push the server all the way into the rack until the server locks into place with a click.

Step 6. Secure the server to the rack.

a. Secure the server to the front of the rack. Fasten the two screws located on the rack latches.

Rack front

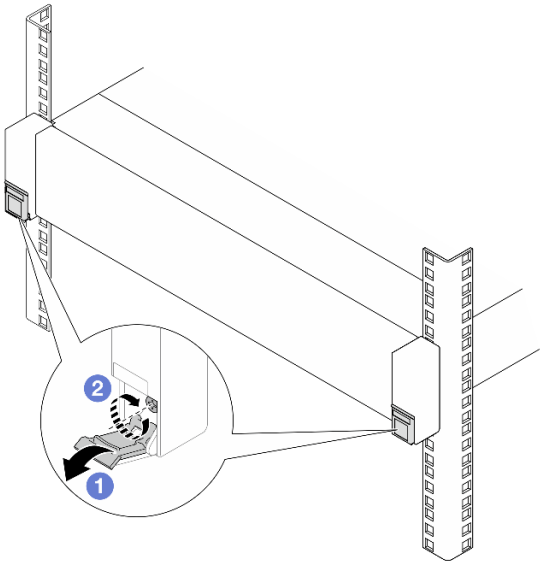

Figure 30. Securing the server to the front of the rack

1. Flip down the covers on the rack latches.
2. Tighten the screws to secure the server.

b. (Optional) Install one M6 screw to each of the rails to secure the server to the rear of the rack.

Rack rear

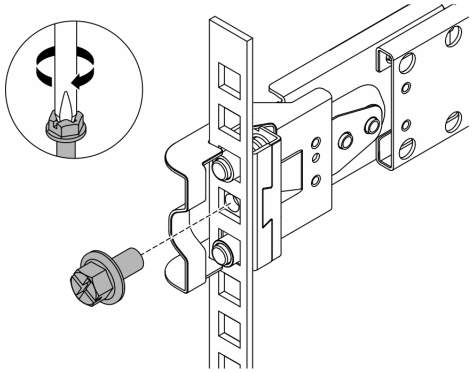

Figure 31. Securing the server to the rear of the rack

After you finish

1. Reconnect external cables and power cords to the server.

   Attention: To avoid component damage, connect the power cords last.
2. Power on the server and any peripheral devices. See "Power on the server" on page 27.
3. Update the server configuration. See "Complete the parts replacement" on page 341.

Remove the server from the rack (slide rails)

Follow the instructions in this section to remove the server from the rack equipped with slide rails.

S036



18 - 32 kg (39 - 70 lb)



32 - 55 kg (70 - 121 lb)

CAUTION:
Use safe practices when lifting.

R006



CAUTION:
Do not place any object on top of a rack-mounted device unless that rack-mounted device is intended for use as a shelf.

CAUTION:

- **Potential stability hazards exist. The rack might tip over and cause serious personal injury.**
- **Before extending the rack to the installation position, read the “Installation Guidelines” on page 1. Do not put any load on the slide-rail mounted equipment in the installation position. Do not leave the slide-rail mounted equipment in the installation position.**

About this task

Attention:

- Read “Installation Guidelines” on page 1 and “Safety inspection checklist” on page 2 to ensure that you work safely.
- Power off the server and peripheral devices and disconnect the power cords and all external cables. See “Power off the server” on page 27.
- Prevent exposure to static electricity, which might lead to system halt and loss of data, by keeping static-sensitive components in their static-protective packages until installation, and handling these devices with an electrostatic-discharge wrist strap or other grounding system.

CAUTION:
Make sure to have three people operate the server removal procedures to prevent injury.

Procedure

Step 1. If the rack has a cable management arm (CMA) installed, remove it first.

Step 2. Disengage the server from the rack on the front.

Rack front

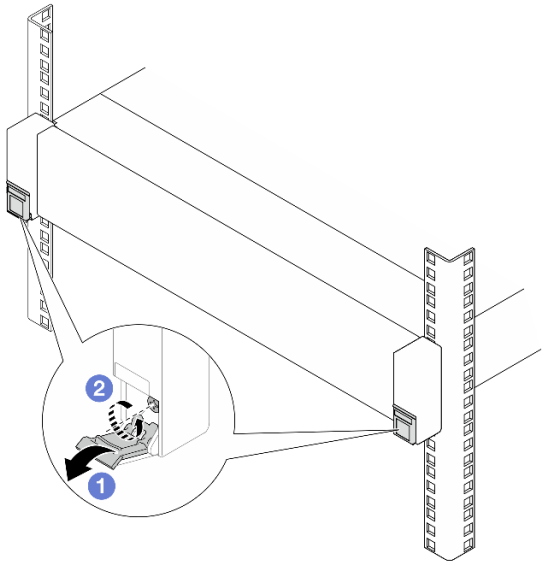

Figure 32. Disengaging server from the rack

a. 1 Flip down the covers on the rack latches.

b. 2 Loosen the screws that secure the server.

Step 3. Remove the server from the rack.

CAUTION:
Make sure three people are lifting the sever by holding the 1 lift points.

Rack front

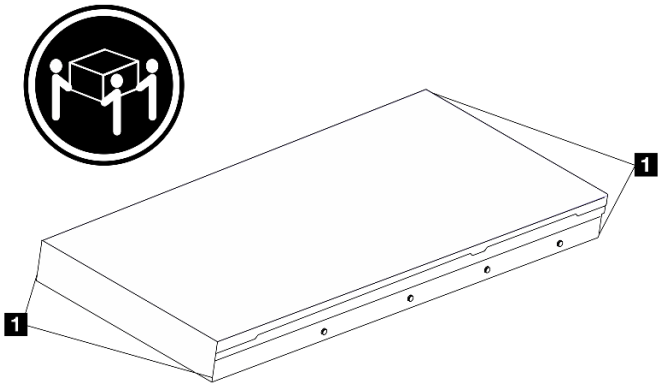

Figure 33. Lifting up the server

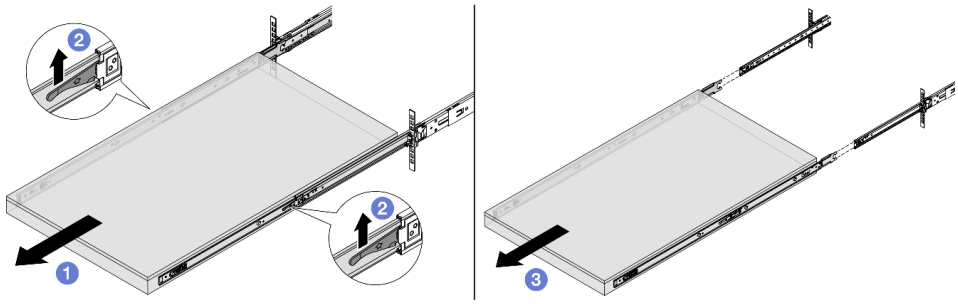

Figure 34. Pulling out the server

a. 1 Slide the server all the way out until it stops.

b. 2 Push up the latches on the rails.

c. 3 With three people, lift up the server to remove it from the rails completely. Place the server on a flat and sturdy surface.

Step 4. Remove the inner rails from the server.

Rack Front

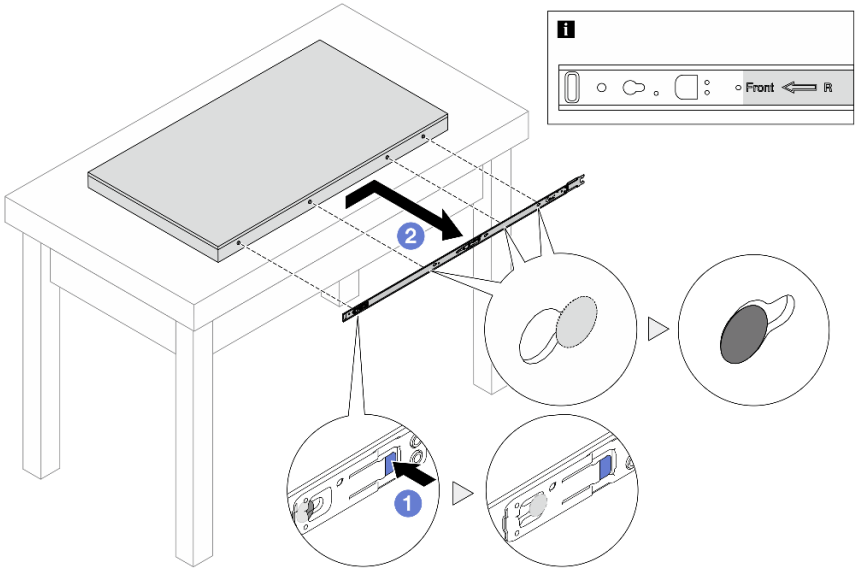

Figure 35. Removing the inner rails

a. 1 Push the blue tab to release the latch.

b. 2 Push the inner rail backwards until the T-pins on the server disengaged from the inner rail.

Step 5. Repeat the previous step to the other rail.

After you finish

Carefully lay the server on a flat, static-protective surface.

Install the server to the rack (slide rails)

Follow the instructions in this section to install the server to the rack equipped with slide rails.

S036



18 - 32 kg (39 - 70 lb)



32 - 55 kg (70 - 121 lb)

CAUTION:
Use safe practices when lifting.

R006



CAUTION:
Do not place any object on top of a rack-mounted device unless that rack-mounted device is intended for use as a shelf.

CAUTION:

- **Potential stability hazards exist. The rack might tip over and cause serious personal injury.**
- **Before extending the rack to the installation position, read the "Installation Guidelines" on page 1. Do not put any load on the slide-rail mounted equipment in the installation position. Do not leave the slide-rail mounted equipment in the installation position.**

About this task

Attention:

- Read "Installation Guidelines" on page 1 and "Safety inspection checklist" on page 2 to ensure that you work safely.
- Power off the server and peripheral devices and disconnect the power cords and all external cables. See "Power off the server" on page 27.
- Prevent exposure to static electricity, which might lead to system halt and loss of data, by keeping static-sensitive components in their static-protective packages until installation, and handling these devices with an electrostatic-discharge wrist strap or other grounding system.

CAUTION:
Make sure to have three people operate the server installation procedures to prevent injury.

Procedure

Step 1. From the front of the rack, pull the rails all the way out until they stop and remove the inner rails.

Attention: You can only install the server successfully when the rails are fully extended.

Rack front

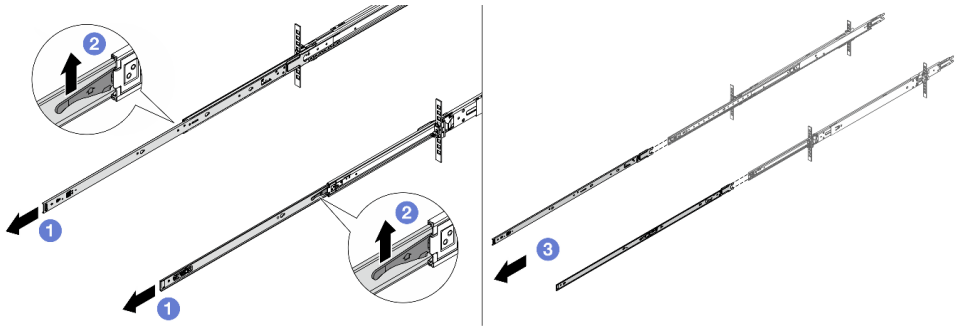

Figure 36. Pulling out the rails

a. 1 Extend the inner rails.

b. 2 Push up the latches to disengage inner rails from the intermediate ones.

c. 3 Remove the inner rails.

Step 2. Install the inner rail to the server. Align the slots on the inner rail with the corresponding T-pins on the side of the server; then, slide the inner rail forwards until the T-pins lock into place with the inner rail.

Notes:

1. Make sure that the stamp “Front” always faces toward the front when assembling the inner rails to the server.
2. “L” and “R” stamps indicate the left and right sides of the rails.

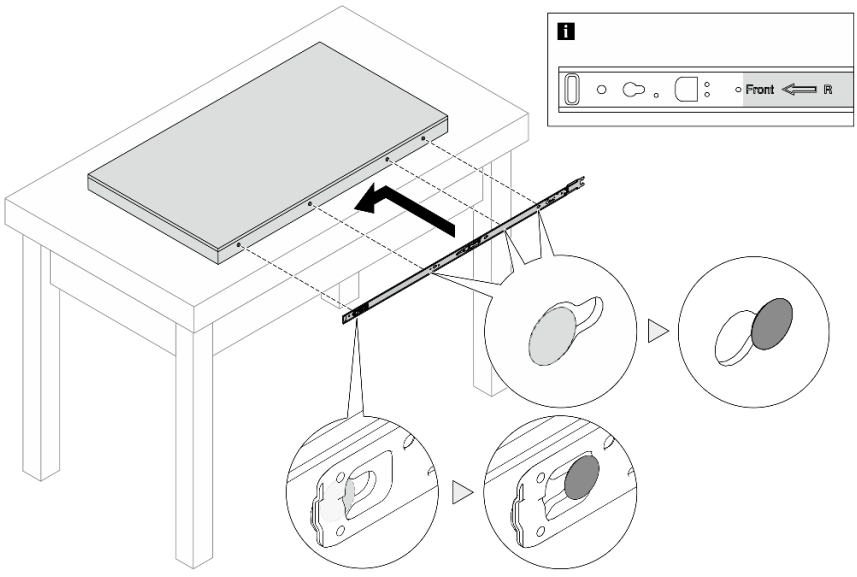

Figure 37. Installing inner rails

Step 3. Repeat the previous step to the other rail.

Step 4. Carefully lift up the server with three people.

CAUTION:

Make sure three people are lifting the sever by holding the 1 lift points.

Rack front

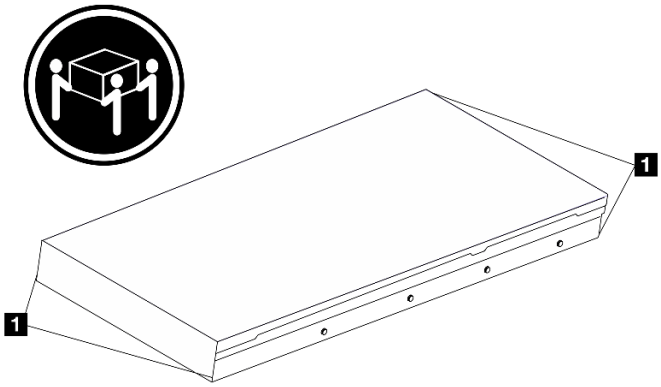

Figure 38. Lifting up the server

Step 5. From the front of the rack, install server into the rails.

Note: Before installing the inner rails to the intermediate ones, make sure that the ball retainers on both sides reach the outmost position. If the retainers are not in good position, slide them to the front until they stop.

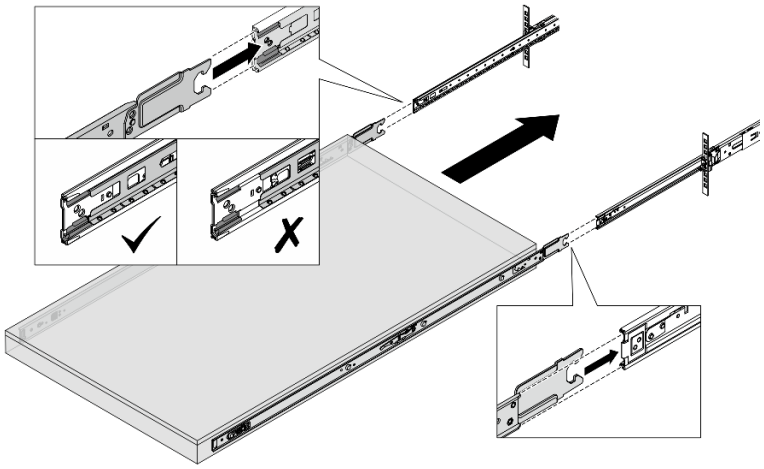

Figure 39. Interlocking rails

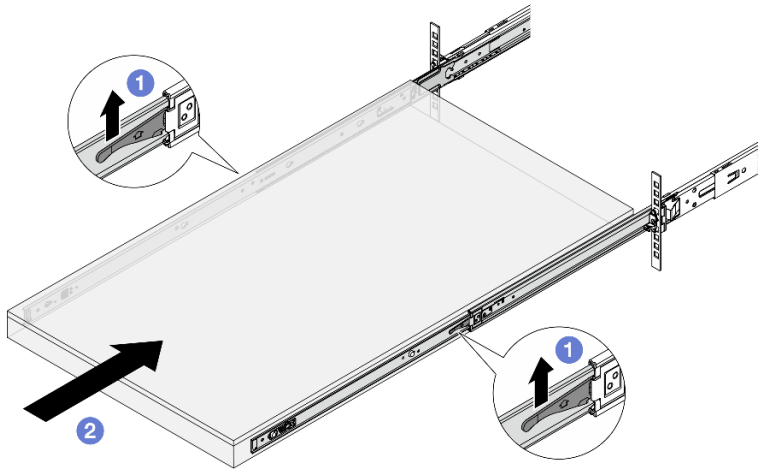

Figure 40. Locking rails and sliding in the server

a. 1 Push up the latches on the rails.

b. 2 Push the server all the way into the rack until both latches lock into position with a click.

Step 6. Secure the server to the rack.

a. Secure the server to the front of the rack.

Rack front

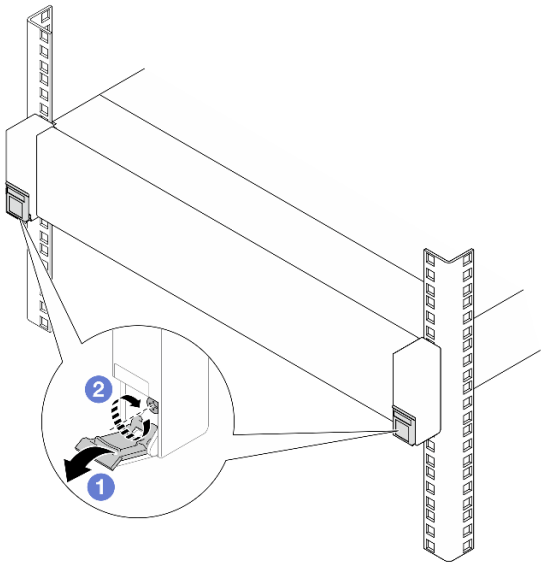

Figure 41. Securing the server to the front of the rack

1 Flip down the covers on the rack latches.

2 Tighten the screws to secure the server.

b. (Optional) Install one M6 screw to each of the rails to secure the server to the rear of the rack.

Rack rear

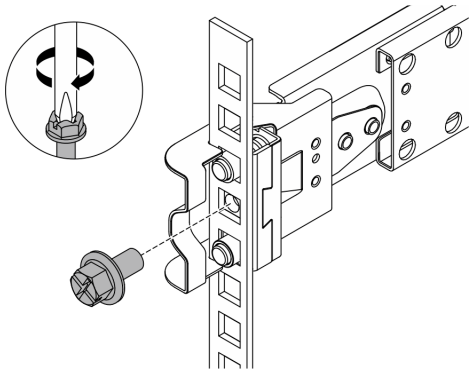

Figure 42. Securing the server to the rear of the rack

After you finish

1. Reconnect external cables and power cords to the server.

   Attention: To avoid component damage, connect the power cords last.
2. Power on the server and any peripheral devices. See “Power on the server” on page 27.
3. Update the server configuration. See “Complete the parts replacement” on page 341.

2.5-inch or 3.5-inch hot-swap drive replacement

Follow the instructions in this section to remove and install a 2.5-inch or 3.5-inch hot-swap drive. You can remove or install a hot-swap drive without turning off the server, which helps you avoid significant interruption to the operation of the system.

- “Remove a 2.5-inch or 3.5-inch hot-swap drive” on page 50
- “Install a 2.5-inch or 3.5-inch hot-swap drive” on page 52

Notes:

- The term “hot-swap drive” refers to all the supported types of hot-swap hard disk drives, hot-swap solid-state drives, and hot-swap NVMe drives.
- Use any documentation that comes with the drive, and follow the instructions and those in this topic.
- The electromagnetic interference (EMI) integrity and cooling of the server are protected by having all drive bays covered or occupied. The vacant bays are either covered by an EMI-protective panel or occupied by drive fillers. When installing a drive, save any removed drive fillers for future use to cover vacant bays.

Remove a 2.5-inch or 3.5-inch hot-swap drive

Follow the instructions in this section to remove a 2.5-inch or 3.5-inch hot-swap drive.

About this task

Attention:

- Read “Installation Guidelines” on page 1 and “Safety inspection checklist” on page 2 to ensure that you work safely.

- Prevent exposure to static electricity, which might lead to system halt and loss of data, by keeping static-sensitive components in their static-protective packages until installation, and handling these devices with an electrostatic-discharge wrist strap or other grounding system.
- Before you remove or make changes to drives, drive controllers (including controllers that are integrated on the system board assembly), drive backplanes or drive cables, back up all important data that is stored on drives.
- Before you remove any component of a RAID array (drive, RAID card, etc.), back up all RAID configuration information.
- If one or more NVMe solid-state drives are to be removed, it is recommended to disable them beforehand via the operating system.
- To ensure that there is adequate system cooling, do not operate the server for more than two minutes without either a drive or a drive filler installed in each bay.

Procedure

Step 1. (Optional) Remove the security bezel. See "Remove the security bezel" on page 304.

Step 2. Slide the release latch to unlock the drive handle.

2.5-inch hot-swap drive	3.5-inch hot-swap drive
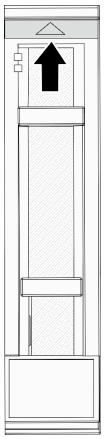	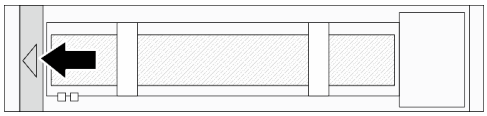

Step 3. Grasp the handle and slide the drive out of the drive bay.

2.5-inch hot-swap drive	3.5-inch hot-swap drive
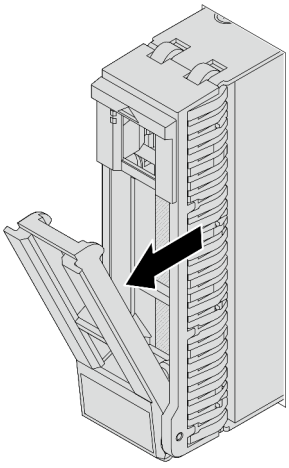	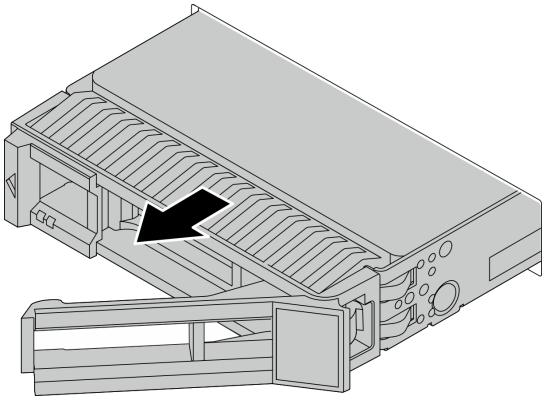

After you finish

1. Install a new drive or drive filler to cover the drive bay. See “Install a 2.5-inch or 3.5-inch hot-swap drive” on page 52.
2. If you are instructed to return the component or optional device, follow all packaging instructions, and use any packaging materials for shipping that are supplied to you.

Demo video

Watch the procedure on YouTube

Install a 2.5-inch or 3.5-inch hot-swap drive

Follow the instructions in this section to install a 2.5-inch or 3.5-inch hot-swap.

About this task

Attention:

- Read “Installation Guidelines” on page 1 and “Safety inspection checklist” on page 2 to ensure that you work safely.
- Prevent exposure to static electricity, which might lead to system halt and loss of data, by keeping static-sensitive components in their static-protective packages until installation, and handling these devices with an electrostatic-discharge wrist strap or other grounding system.
- To ensure that there is adequate system cooling, do not operate the server for more than two minutes without either a drive or a drive filler installed in each bay.

For a list of supported drives, see https://serverproven.lenovo.com.

Firmware and driver download: You might need to update the firmware or driver after replacing a component.

- Go to https://datacentersupport.lenovo.com/products/servers/thinksystem/sr650v4/downloads/driver-list/ to see the latest firmware and driver updates for your server.
- Go to “Update the firmware” in *User Guide* or *System Configuration Guide* for more information on firmware updating tools.

Procedure

Step 1. Touch the static-protective package that contains the new part to any unpainted surface on the outside of the server. Then, take the new part out of the package and place it on a static-protective surface.

Step 2. (Optional) Remove the drive filler from the drive bay and keep the drive filler in a safe place.

Step 3. Install the drive in the drive bay.

2.5-inch hot-swap drive	3.5-inch hot-swap drive
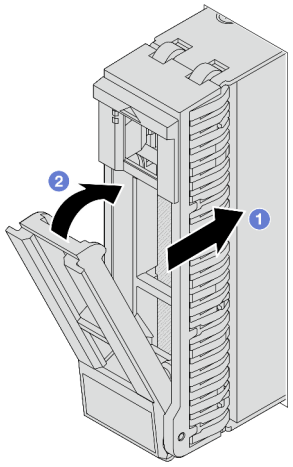	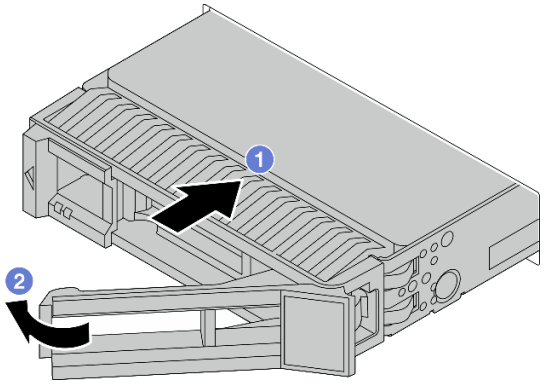

a. 1 Ensure that the drive tray handle is in the open position. Slide the drive into the drive bay until it snaps into position.

b. 2 Close the drive tray handle to lock the drive in place.

Step 4. Check the drive LEDs to verify that the drive is operating normally. For details, see “Drive LEDs” in *User Guide*.

Step 5. Continue to install additional hot-swap drives if necessary.

After you finish

1. Reinstall the security bezel if you have removed it. See “Install the security bezel” on page 306.
2. Use the Lenovo XClarity Provisioning Manager to configure the RAID if necessary. For more information, see:
   https://pubs.lenovo.com/lxpm-overview/

Demo video

Watch the procedure on YouTube

Air baffle replacement

Follow the instructions in this section to remove and install the air baffle.

The air baffle varies by the server hardware configuration. Refer to “Thermal rules” on page 17 to select the appropriate air baffle for your server. This topic uses the standard air baffle as an example for illustration. For information about the GPU air baffle, see “GPU replacement” on page 90.

Figure 43. Standard air baffle

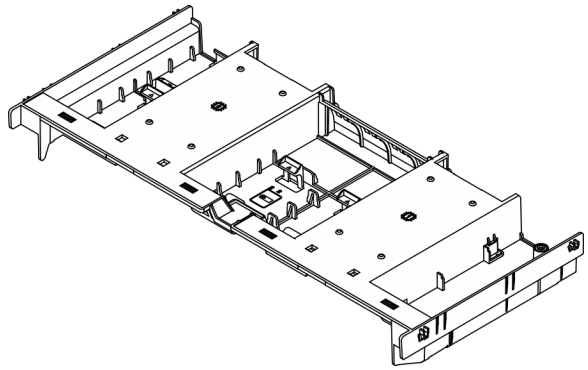

Figure 44. GPU air baffle

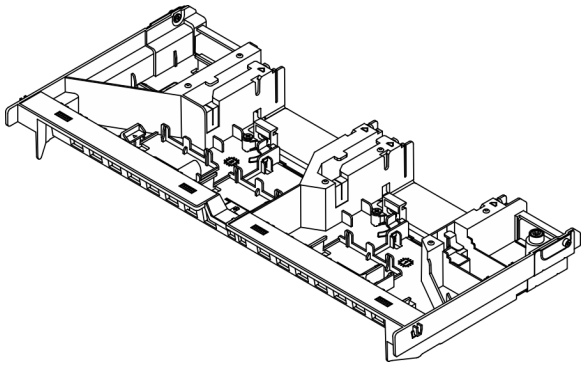

- “Remove the air baffle” on page 54
- “Install the air baffle” on page 56

Remove the air baffle

Follow the instructions in this section to remove the air baffle.

About this task

S033



CAUTION:
Hazardous energy present. Voltages with hazardous energy might cause heating when shorted with metal, which might result in spattered metal, burns, or both.

S017



CAUTION:
Hazardous moving fan blades nearby. Keep fingers and other body parts away.

Attention:

- Read “Installation Guidelines” on page 1 and “Safety inspection checklist” on page 2 to ensure that you work safely.
- Power off the server and peripheral devices and disconnect the power cords and all external cables. See “Power off the server” on page 27.
- Operating the server with the air baffle removed might damage server components. For proper cooling and airflow, reinstall the air baffle before you turn on the server.

Procedure

Note: The illustrated air baffle is the standard air baffle. The removal procedure is the same for the GPU air baffle.

Step 1. Make preparation for the task.

a. If the server is installed in a rack, slide the server out on its rack slide rails to gain access to the top cover, or remove the server from the rack. See "Server replacement" on page 34.

b. Remove the top cover. See "Remove the top cover" on page 335.

c. If there is a RAID flash power module installed on the air baffle, disconnect the cable of the RAID flash power module first.

d. If there is an M.2 drive installed on the air baffle, disconnect the M.2 backplane cables.

e. If there is a GPU adapter installed on the air baffle, remove the GPU adapter. See "Remove a GPU adapter" on page 92.

Step 2. Grasp the air baffle and carefully lift it out of the chassis.

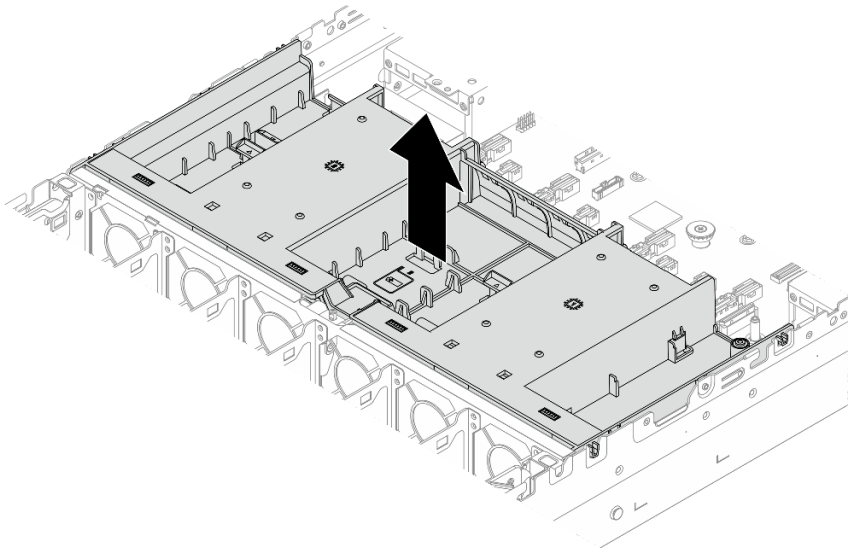

Figure 45. Removing the air baffle

Step 3. (Optional) Remove the air baffle filler.

Note: The filler is needed only for the standard air baffle when no heat sink is installed or a 1U heat sink is installed.

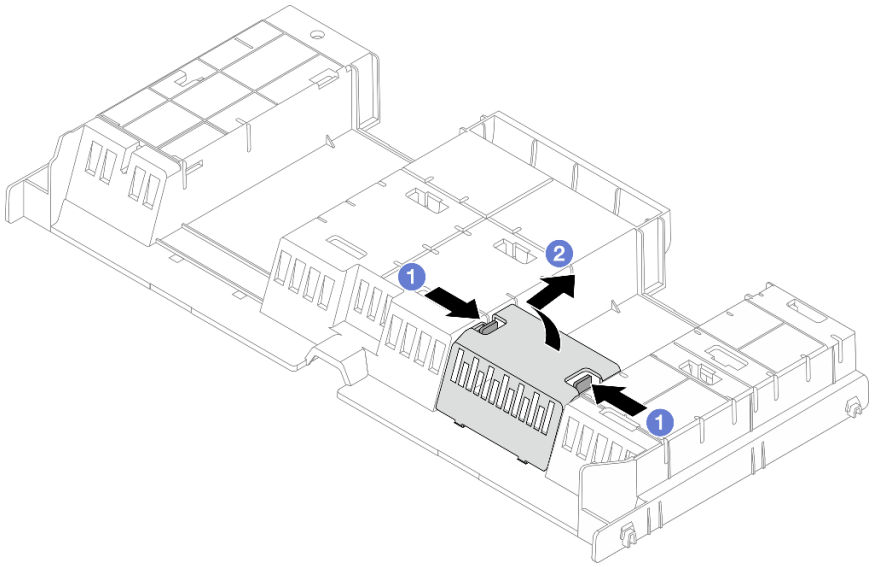

Figure 46. Removing the air baffle filler

a. Hold the filler tabs on both sides of the filler.
b. Remove the filler from the air baffle as illustrated above.

After you finish

If you are instructed to return the component or optional device, follow all packaging instructions, and use any packaging materials for shipping that are supplied to you.

Demo video

Watch the procedure on YouTube

Install the air baffle

Follow the instructions in this section to install the air baffle.

About this task

S033



CAUTION:
Hazardous energy present. Voltages with hazardous energy might cause heating when shorted with metal, which might result in spattered metal, burns, or both.

S017



CAUTION:
Hazardous moving fan blades nearby. Keep fingers and other body parts away.

Attention:

- Read “Installation Guidelines” on page 1 and “Safety inspection checklist” on page 2 to ensure that you work safely.
- Power off the server and peripheral devices and disconnect the power cords and all external cables. See “Power off the server” on page 27.
- Operating the server with the air baffle removed might damage server components. For proper cooling and airflow, reinstall the air baffle before you turn on the server.

Procedure

Note: The illustrated air baffle is a standard air baffle. The installation procedure is the same for the GPU air baffle.

Step 1. Refer to “Thermal rules” on page 17 to select the appropriate air baffle for your server.

Step 2. (Optional) Install the air baffle filler.

Note: The filler is needed only for the standard air baffle when no heat sink is installed or a 1U heat sink is installed.

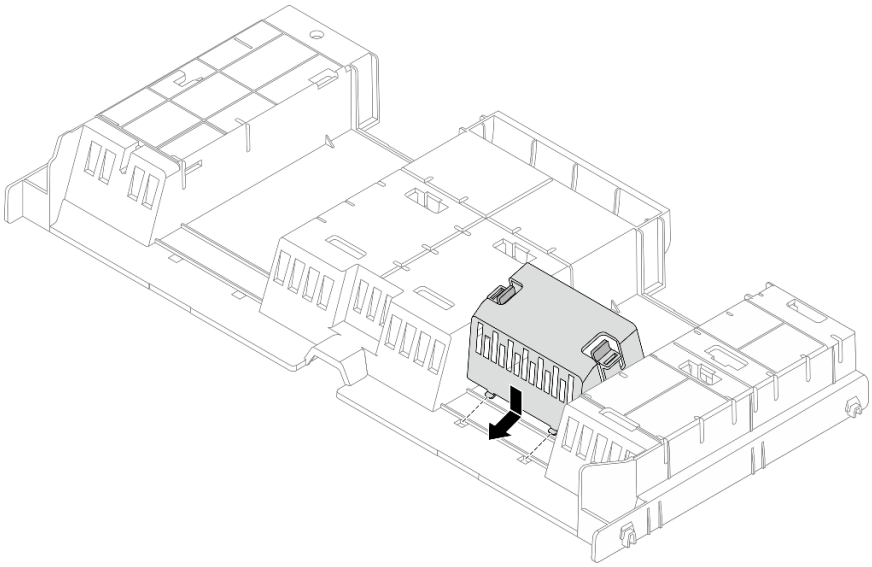

Figure 47. Installing the air baffle filler

Step 3. Align the tabs on both sides of the air baffle with the corresponding slots on both sides of the chassis. Then, lower the air baffle into the chassis and press the air baffle down until it is securely seated.

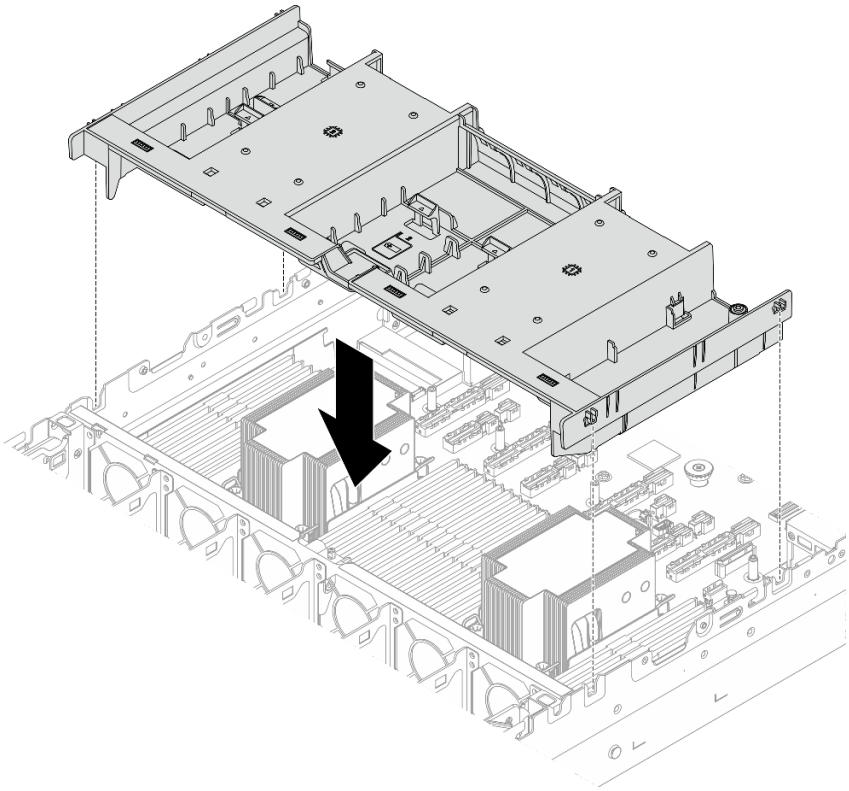

Figure 48. Installing the air baffle

After you finish

1. Reconnect cables of RAID flash power modules if you have disconnected them. See ***Internal Cable Routing Guide***.
2. Reconnect cables of the M.2 backplane if you have disconnected them. See ***Internal Cable Routing Guide***.
3. Reinstall the GPU adapter if you have removed it. See "Install a GPU adapter" on page 95.
4. Complete the parts replacement. See "Complete the parts replacement" on page 341.

Demo video

Watch the procedure on YouTube

Cable wall replacement

Follow the instructions in this section to remove and install the cable walls.

Notes: The server comes with 1U cable walls at both side of the processor board. It is recommended to replace the 1U cable walls with 2U cable walls when there are more than five cables routed at one side.

The 2U cable walls are mandatory in the following configurations:
- configurations with one processor and four E3.S backplanes
- configurations with two processors and eight E3.S backplanes

- "Remove the cable walls" on page 59
- "Install the cable walls" on page 61

Remove the cable walls

Follow the instructions in this section to remove the cable walls.

About this task

Attention:

- Read “Installation Guidelines” on page 1 and “Safety inspection checklist” on page 2 to ensure that you work safely.
- Power off the server and peripheral devices and disconnect the power cords and all external cables. See “Power off the server” on page 27.
- Prevent exposure to static electricity, which might lead to system halt and loss of data, by keeping static-sensitive components in their static-protective packages until installation, and handling these devices with an electrostatic-discharge wrist strap or other grounding system.

Procedure

Step 1. Make preparation for the task.

a. If the server is installed in a rack, slide the server out on its rack slide rails to gain access to the top cover, or remove the server from the rack. See “Server replacement” on page 34.

b. Remove the top cover. See “Remove the top cover” on page 335.

c. Remove the air baffle. See “Remove the air baffle” on page 54.

d. Remove the system fan cage. See “Remove the system fan cage” on page 333.

Step 2. If necessary, disconnect the cables from the system board assembly for easier operation.

Attention: To avoid damaging the system board assembly, make sure to follow the instructions in ***Internal Cable Routing Guide*** when disconnecting cables from the system board assembly.

Step 3. Remove the cables from the cable walls.

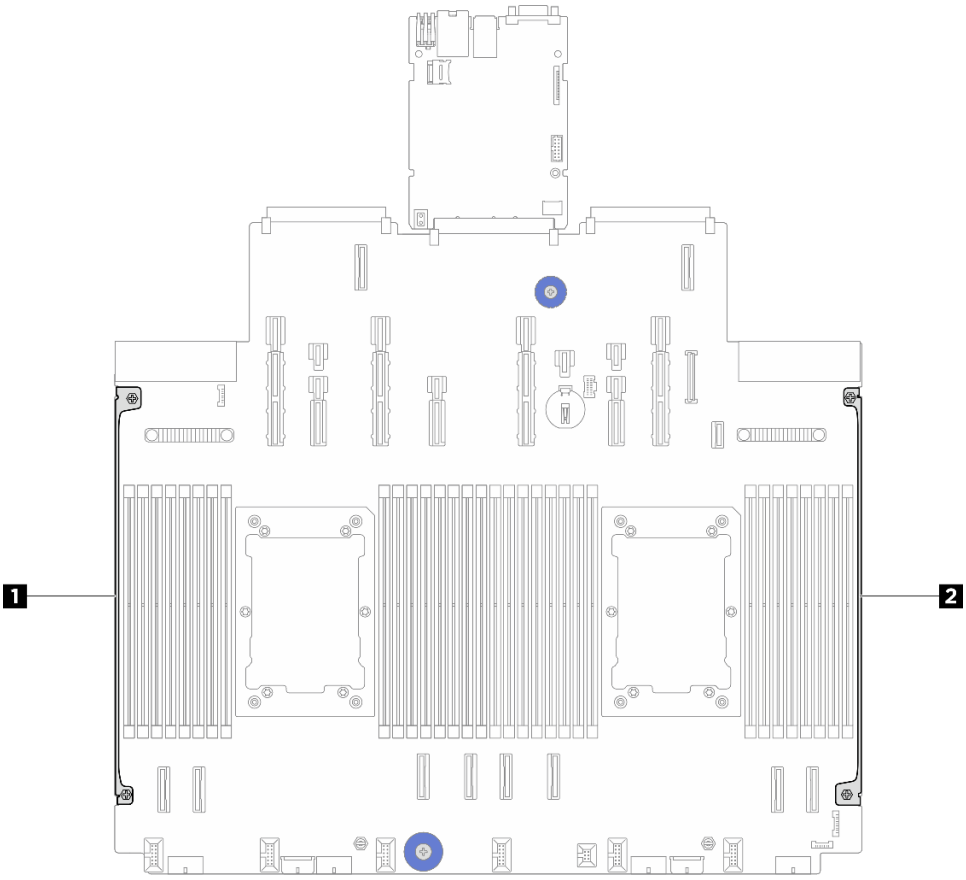

Figure 49. Cable wall locations

1 2 Cable walls

Step 4. Loosen the two screws that secure the cable wall; then, lift the cable wall from the system board assembly to remove it. Repeat the step to the other cable wall.

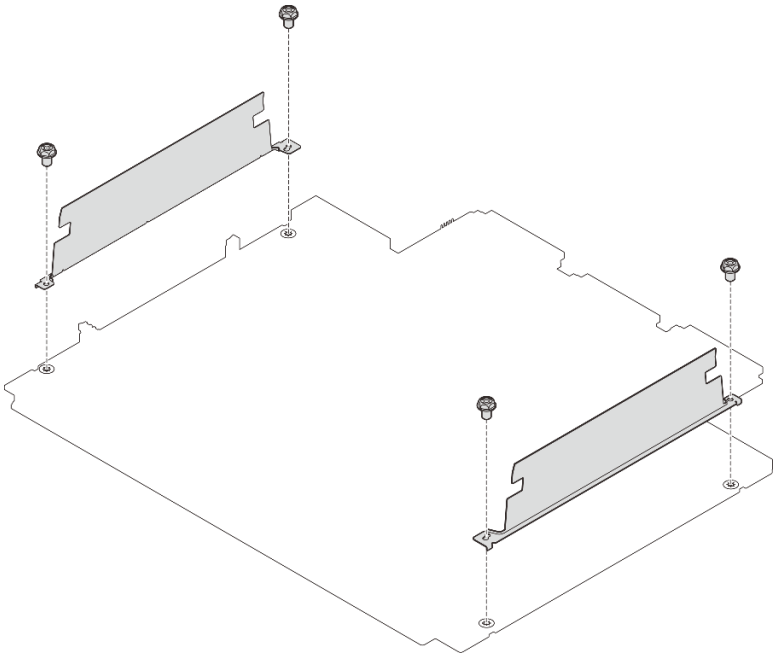

Figure 50. Removing the cable walls

After you finish

If you are instructed to return the component or optional device, follow all packaging instructions, and use any packaging materials for shipping that are supplied to you.

Demo video

Watch the procedure on YouTube

Install the cable walls

Follow the instructions in this section to install the cable walls.

About this task

Attention:

- Read “Installation Guidelines” on page 1 and “Safety inspection checklist” on page 2 to ensure that you work safely.
- Power off the server and peripheral devices and disconnect the power cords and all external cables. See “Power off the server” on page 27.
- Prevent exposure to static electricity, which might lead to system halt and loss of data, by keeping static-sensitive components in their static-protective packages until installation, and handling these devices with an electrostatic-discharge wrist strap or other grounding system.

Procedure

Step 1. Touch the static-protective package that contains the new part to any unpainted surface on the outside of the server. Then, take the new part out of the package and place it on a static-protective surface.

Step 2. Align the cable wall with the screw holes on the system board assembly; then, fasten two screws to secure the cable wall. Repeat the step to the other cable wall.

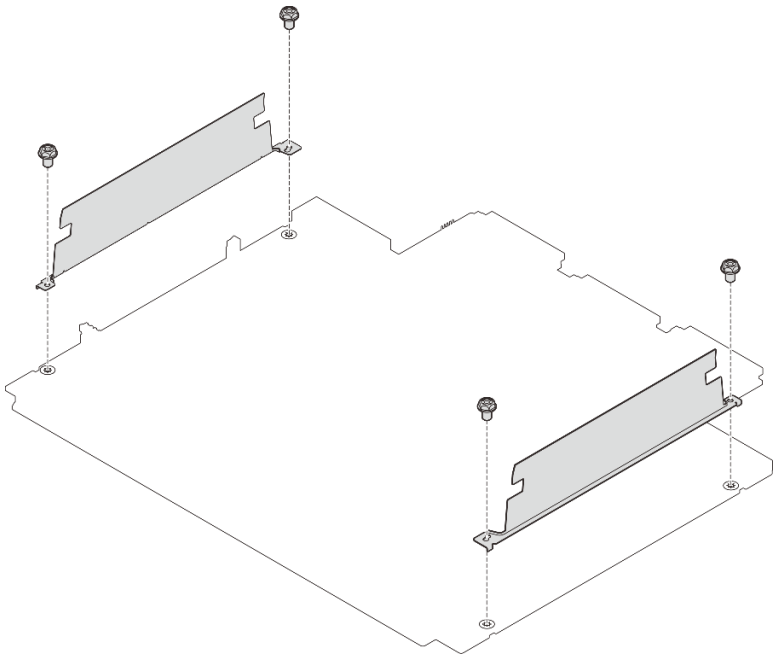

Figure 51. Installing the cable walls

Step 3. Connect the cables to the system board assembly if applicable, and route the cables into the space between cable wall and chassis to secure the cables. See ***Internal Cable Routing Guide***.

After you finish

Complete the parts replacement. See “Complete the parts replacement” on page 341.

Demo video

Watch the procedure on YouTube

CMOS battery (CR2032) replacement

Follow the instructions in this section to remove and install the CMOS battery (CR2032).

- “Remove the CMOS battery (CR2032)” on page 62
- “Install the CMOS battery (CR2032)” on page 64

Remove the CMOS battery (CR2032)

Follow the instructions in this section to remove the CMOS battery.

About this task

The following tips describe information that you must consider when removing the CMOS battery.

- Lenovo has designed this product with your safety in mind. The lithium CMOS battery must be handled correctly to avoid possible danger. If you replace the CMOS battery, you must adhere to local ordinances or regulations for battery disposal.
- If you replace the original lithium battery with a heavy-metal battery or a battery with heavy-metal components, be aware of the following environmental consideration. Batteries and accumulators that contain heavy metals must not be disposed of with normal domestic waste. They will be taken back free of charge by the manufacturer, distributor, or representative, to be recycled or disposed of in a proper manner.
- To order replacement batteries, call your support center or business partner. For Lenovo support telephone numbers, see https://datacentersupport.lenovo.com/supportphonelist for your region support details.

Note: After you replace the CMOS battery, you must reconfigure the server and reset the system date and time.

S004



CAUTION:
When replacing the lithium battery, use only Lenovo specified part number or an equivalent type of battery recommended by the manufacturer. If your system has a module containing a lithium battery, replace it only with the same module type made by the same manufacturer. The battery contains lithium and can explode if not properly used, handled, or disposed of.

Do not:

- **Throw or immerse into water**
- **Heat to more than 100°C (212°F)**
- **Repair or disassemble**

Dispose of the battery as required by local ordinances or regulations.

S002

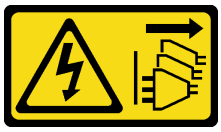

CAUTION:
The power-control button on the device and the power switch on the power supply do not turn off the electrical current supplied to the device. The device also might have more than one power cord. To remove all electrical current from the device, ensure that all power cords are disconnected from the power source.

Attention:

- Read “Installation Guidelines” on page 1 and “Safety inspection checklist” on page 2 to ensure that you work safely.
- Power off the server and peripheral devices and disconnect the power cords and all external cables. See “Power off the server” on page 27.

- Prevent exposure to static electricity, which might lead to system halt and loss of data, by keeping static-sensitive components in their static-protective packages until installation, and handling these devices with an electrostatic-discharge wrist strap or other grounding system.

Procedure

Step 1. Remove the top cover. See “Remove the top cover” on page 335.

Step 2. Remove any parts and disconnect any cables that might impede your access to the CMOS battery.

Step 3. Locate the CMOS battery. See “System-board-assembly connectors” in *User Guide* or *System Configuration Guide*.

Step 4. Open the battery clip as shown and carefully take the CMOS battery out of the socket.

Attention:

- Failing to remove the CMOS battery properly might damage the socket on the processor board. Any damage to the socket might require replacing the processor board.
- Do not tilt or push the CMOS battery by using excessive force.

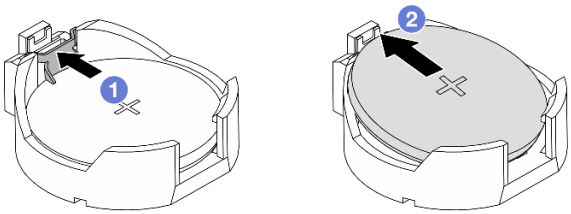

Figure 52. Removing the CMOS battery

1. 1 Press the clip on the CMOS battery socket.
2. 2 Remove the CMOS battery.

After you finish

1. Install a new CMOS battery. See “Install the CMOS battery (CR2032)” on page 64.
2. If you are instructed to return the component or optional device, follow all packaging instructions, and use any packaging materials for shipping that are supplied to you.
3. Dispose of the CMOS battery as required by local ordinances or regulations.

Demo video

Watch the procedure on YouTube

Install the CMOS battery (CR2032)

Follow the instructions in this section to install the CMOS battery.

About this task

The following tips describe information that you must consider when installing the CMOS battery.

- Lenovo has designed this product with your safety in mind. The lithium CMOS battery must be handled correctly to avoid possible danger. If you replace the CMOS battery, you must adhere to local ordinances or regulations for battery disposal.

- If you replace the original lithium battery with a heavy-metal battery or a battery with heavy-metal components, be aware of the following environmental consideration. Batteries and accumulators that contain heavy metals must not be disposed of with normal domestic waste. They will be taken back free of charge by the manufacturer, distributor, or representative, to be recycled or disposed of in a proper manner.
- To order replacement batteries, call your support center or business partner. For Lenovo support telephone numbers, see https://datacentersupport.lenovo.com/supportphonelist for your region support details.

Note: After you replace the CMOS battery, you must reconfigure the server and reset the system date and time.

S004



CAUTION:
When replacing the lithium battery, use only Lenovo specified part number or an equivalent type of battery recommended by the manufacturer. If your system has a module containing a lithium battery, replace it only with the same module type made by the same manufacturer. The battery contains lithium and can explode if not properly used, handled, or disposed of.

Do not:

- **Throw or immerse into water**
- **Heat to more than 100°C (212°F)**
- **Repair or disassemble**

Dispose of the battery as required by local ordinances or regulations.

S002



CAUTION:
The power-control button on the device and the power switch on the power supply do not turn off the electrical current supplied to the device. The device also might have more than one power cord. To remove all electrical current from the device, ensure that all power cords are disconnected from the power source.

Attention:

- Read “Installation Guidelines” on page 1 and “Safety inspection checklist” on page 2 to ensure that you work safely.
- Power off the server and peripheral devices and disconnect the power cords and all external cables. See “Power off the server” on page 27.
- Prevent exposure to static electricity, which might lead to system halt and loss of data, by keeping static-sensitive components in their static-protective packages until installation, and handling these devices with an electrostatic-discharge wrist strap or other grounding system.

Procedure

Step 1. Install the CMOS battery. Ensure that the CMOS battery is seated in place.

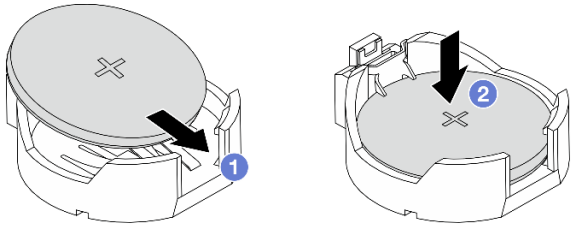

Note: Before you install the battery into the socket, make sure that the positive side faces upward.

1. 1 Tilt the battery and insert it to the socket.
2. 2 Press the battery down until it clicks into the socket.

Figure 53. Installing the CMOS battery

After you finish

1. Complete the parts replacement. See “Complete the parts replacement” on page 341.
2. Use the Setup Utility to set the date, time, and any passwords.

Demo video

Watch the procedure on YouTube

E3.S non-hot-swap CMM replacement

Follow the instructions in this section to remove and install an E3.S non-hot-swap CXL memory module (CMM).

- “Remove an E3.S non-hot-swap CMM” on page 66
- “Install an E3.S non-hot-swap CMM” on page 68

Remove an E3.S non-hot-swap CMM

Follow the instructions in this section to remove an E3.S non-hot-swap CXL memory module (CMM).

About this task

Attention:

- Read “Installation Guidelines” on page 1 and “Safety inspection checklist” on page 2 to ensure that you work safely.
- Power off the server and peripheral devices and disconnect the power cords and all external cables. See “Power off the server” on page 27.
- Prevent exposure to static electricity, which might lead to system halt and loss of data, by keeping static-sensitive components in their static-protective packages until installation, and handling these devices with an electrostatic-discharge wrist strap or other grounding system.

Note: Make sure you have the CMM bay fillers available if some CMM bays will be left empty after the removal.

Procedure

Step 1. Remove the E3.S bezel.

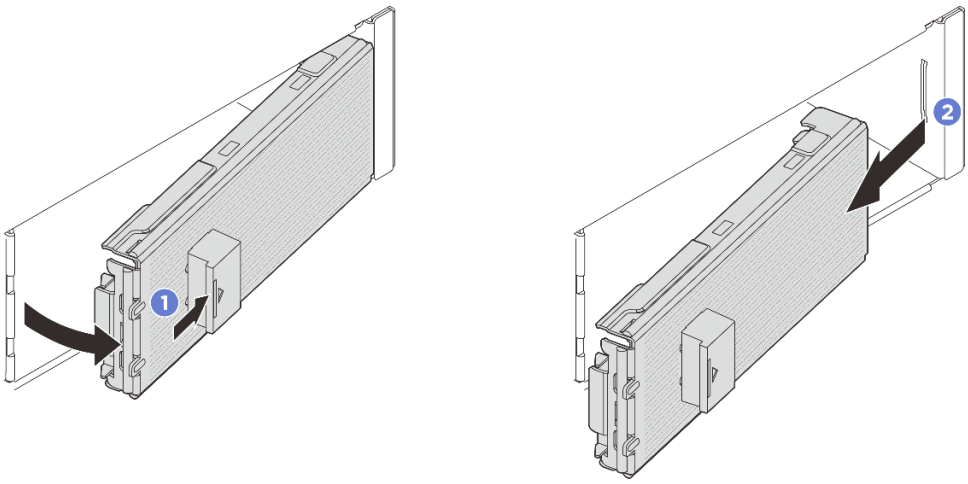

Figure 54. Removing the E3.S bezel

a. 1 Press the button on the E3.S bezel to disengage the bezel.

b. 2 Remove the E3.S bezel from the server.

Step 2. Check whether the health LED of the CMM is off, which means removal is permitted. See "E3.S CMM LEDs" on page 357.

Step 3. Remove the CMM.

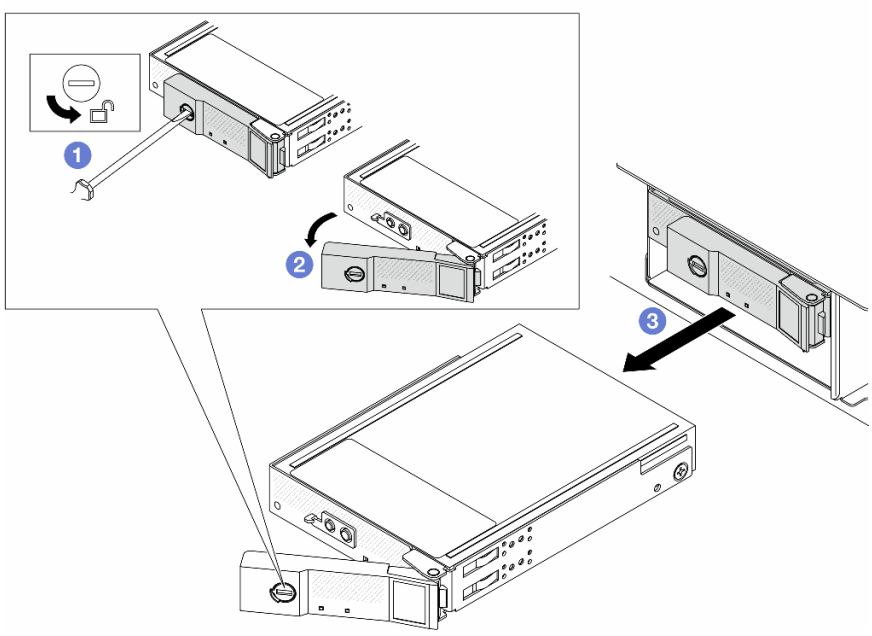

Figure 55. Removing the CMM

a. 1 Rotate the release latch to the open position by using a 3 mm flat-head screwdriver to unlock the handle.

b. 2 Rotate the handle to the open position.

c. 3 Grasp the handle and slide the CMM out of the bay.

Note: Install a bay filler (see the figure below) or a replacement unit (see “Install an E3.S non-hot-swap CMM” on page 68) as soon as possible.

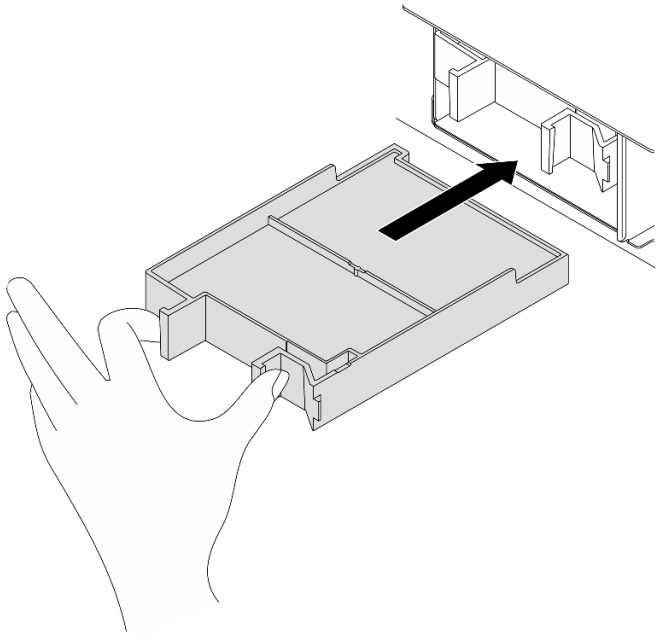

Figure 56. Installing a CMM bay filler

After you finish

If you are instructed to return the component or optional device, follow all packaging instructions, and use any packaging materials for shipping that are supplied to you.

Demo video

Watch the procedure on YouTube

Install an E3.S non-hot-swap CMM

Follow the instructions in this section to install an E3.S non-hot-swap CXL memory module (CMM).

About this task

Attention:
- Read “Installation Guidelines” on page 1 and “Safety inspection checklist” on page 2 to ensure that you work safely.
- Power off the server and peripheral devices and disconnect the power cords and all external cables. See “Power off the server” on page 27.
- Prevent exposure to static electricity, which might lead to system halt and loss of data, by keeping static-sensitive components in their static-protective packages until installation, and handling these devices with an electrostatic-discharge wrist strap or other grounding system.

Procedure

Step 1. If the E3.S bezel is installed, remove the E3.S bezel.

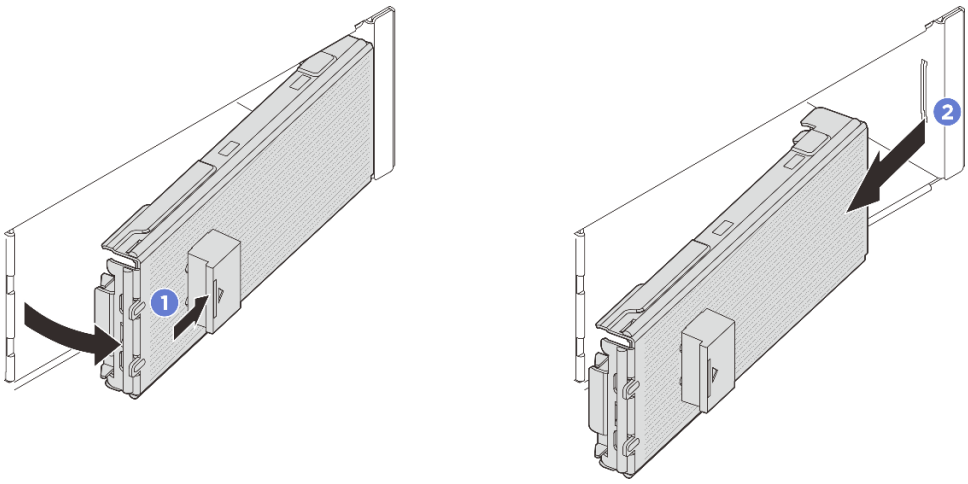

Figure 57. Removing the E3.S bezel

a. 1 Press the button on the E3.S bezel to disengage the cover.

b. 2 Remove the E3.S bezel from the server.

Step 2. If a bay filler is installed in the bay, pull the release lever on the filler and slide it out of the server.

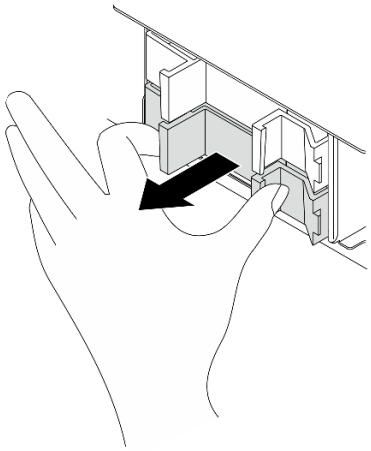

Figure 58. Removing a bay filler

Step 3. Install the E3.S CMM.

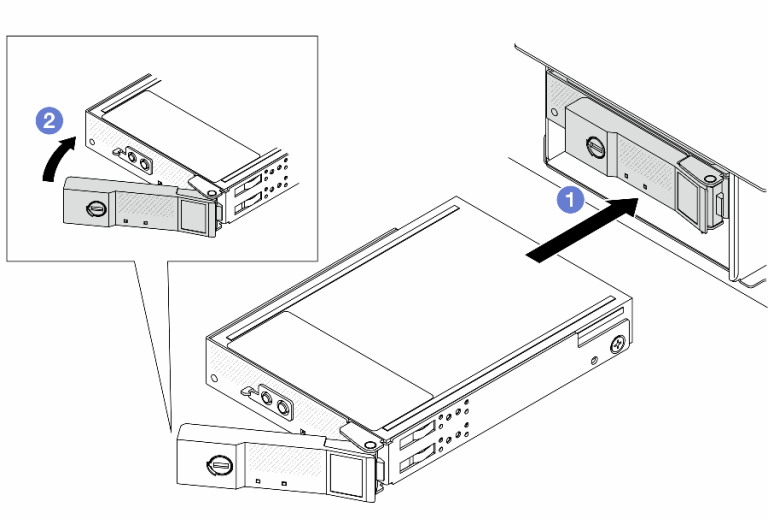

Figure 59. Installing an E3.S CMM

a. 1 Make sure that the handle is in the open position. Then, align the CMM with the guide rails in the bay and gently push the CMM into the bay until the CMM stops.

b. 2 Rotate the handle to the fully closed position until the handle latch clicks.

Step 4. If there are additional CMMs to install, do so now; if any of the bays is left empty, fill it with a bay filler.

Figure 60. Installing a CMM bay filler

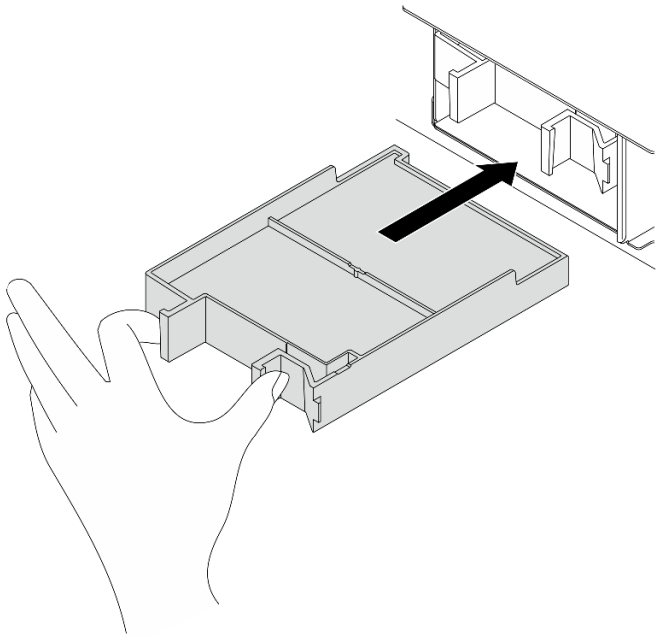

Step 5. Check the CMM LEDs to verify that the drive is operating correctly. See "E3.S CMM LEDs" on page 357.

- If the amber fault LED is lit continuously, the CMM is malfunctioning and must be replaced.
- If the white health LED is flashing, the CMM is functioning.

Step 6. Depending on the configuration, remove the inner plate of the E3.S bezel if necessary.

Notes:

- When the space to be covered is with E3.S 2T cage installed, the inner plate of the E3.S bezel should be removed.
- For proper cooling and airflow, when the space to be covered is without E3.S 2T cage installed, the inner plate of the E3.S bezel is required.

a. (1) Press the tabs to disengage the inner plate.

b. (2) Rotate the inner plate away from the bezel to remove it.

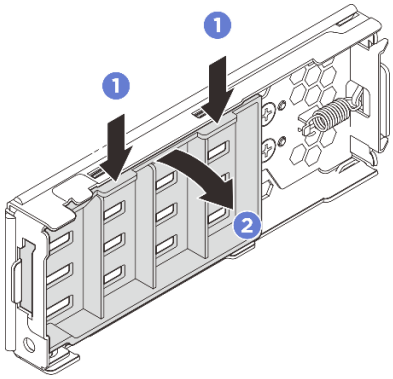

Figure 61. Removing the inner plate

Step 7. Reinstall the E3.S bezel back to the server.

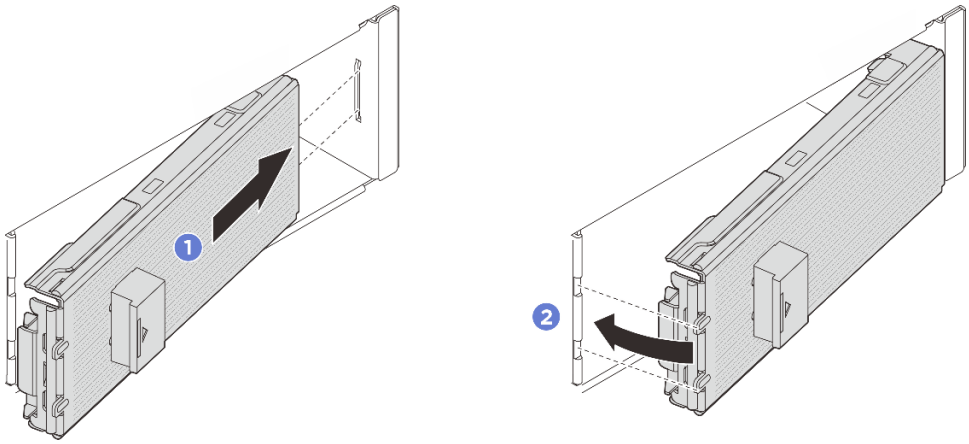

Figure 62. Installing the E3.S bezel

a. (1) Insert the bezel into the slot.

b. (2) Rotate the bezel toward the server until it clicks into place.

Important: The E3.S bezel is designed for proper EMI integrity of the server. The server models with E3.S chassis should always operate with the E3.S bezel installed for every E3.S slot.

After you finish

Complete the parts replacement. See "Complete the parts replacement" on page 341.

Demo video

Watch the procedure on YouTube

E3.S CMM cage and backplane replacement

Follow the instructions in this section to remove and install an E3.S CXL memory module (CMM) cage and backplane.

- "Remove an E3.S CMM cage and backplane" on page 72
- "Install an E3.S CMM cage and backplane" on page 74

Remove an E3.S CMM cage and backplane

Follow the instructions in this section to remove an E3.S CMM cage and backplane.

About this task

Attention:
- Read "Installation Guidelines" on page 1 and "Safety inspection checklist" on page 2 to ensure that you work safely.
- Power off the server and peripheral devices and disconnect the power cords and all external cables. See "Power off the server" on page 27.
- Prevent exposure to static electricity, which might lead to system halt and loss of data, by keeping static-sensitive components in their static-protective packages until installation, and handling these devices with an electrostatic-discharge wrist strap or other grounding system.

Procedure

Step 1. Make preparations for this task.

a. If the server is installed in a rack, slide the server out on its rack slide rails to gain access to the top cover, or remove the server from the rack. See "Server replacement" on page 34.

b. Remove all E3.S CMMs installed in the cage. See "Remove an E3.S non-hot-swap CMM" on page 66.

c. Remove the top cover. See "Remove the top cover" on page 335.

d. Remove the system fan cage. See "Remove the system fan cage" on page 333.

e. Remove the air baffle or middle drive cage. See "Remove the air baffle" on page 54 or "Remove the middle drive cage and drive backplane" on page 219.

f. Disconnect the power and signal cables from the processor board.

Attention: To avoid damaging the system board assembly, make sure to follow the instructions in ***Internal Cable Routing Guide*** when disconnecting cables from the system board assembly.

Step 2. Remove the E3.S 2T cage.

Note: An E3.S bezel without inner plate is used to cover a space with E3.S 2T cage installed. For proper cooling and airflow, make sure to reinstall an E3.S 2T cage and corresponding E3.S bezel before turning on the server. If you use an E3.S bezel without inner plate to cover a space without E3.S 2T cage, server components might be damaged during operation.

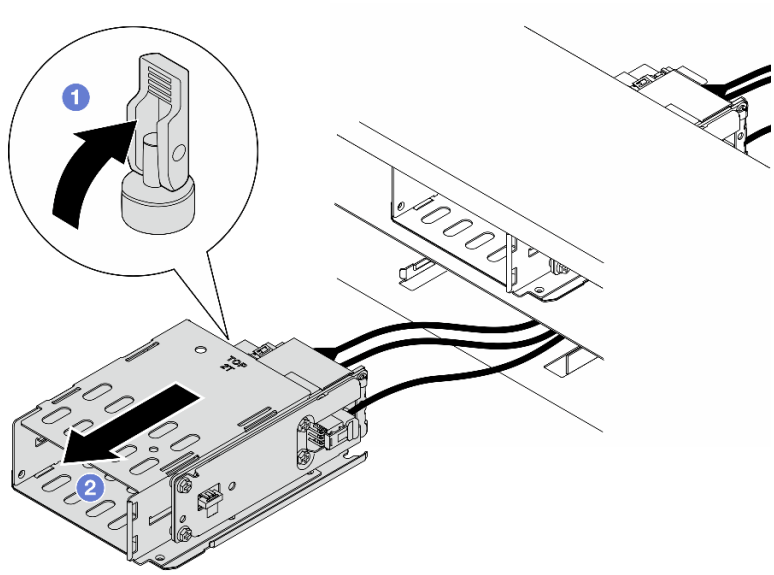

Figure 63. Removing the E3.S 2T cage

a. Open the latch to disengage the cage.

b. Slide the cage out of the chassis.

Step 3. Disconnect the power cable from the backplane.

Step 4. Remove the backplane from the cage.

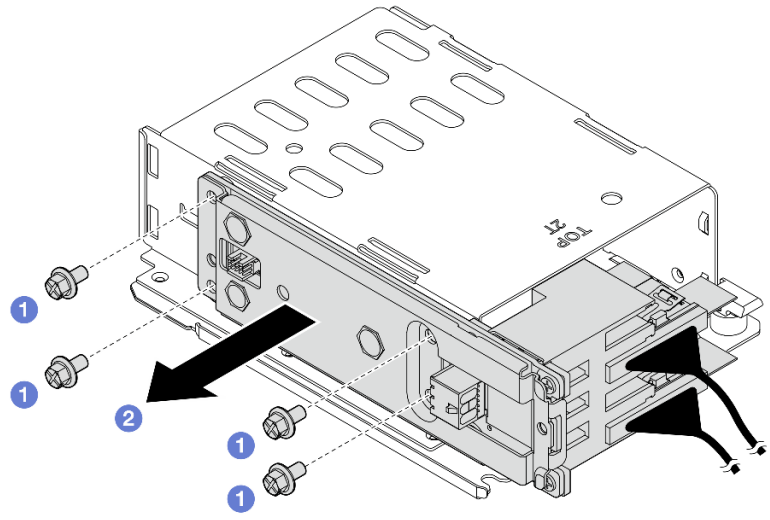

Figure 64. Removing the backplane

a. Loosen the four screws that secure the backplane.

b. Slide the backplane away from the cage.

Step 5. Disconnect the signal cables from the backplane.

After you finish

If you are instructed to return the component or optional device, follow all packaging instructions, and use any packaging materials for shipping that are supplied to you.

Demo video

Watch the procedure on YouTube

Install an E3.S CMM cage and backplane

Follow the instructions in this section to install an E3.S CMM cage and backplane.

About this task

Attention:

- Read “Installation Guidelines” on page 1 and “Safety inspection checklist” on page 2 to ensure that you work safely.
- Power off the server and peripheral devices and disconnect the power cords and all external cables. See “Power off the server” on page 27.
- Prevent exposure to static electricity, which might lead to system halt and loss of data, by keeping static-sensitive components in their static-protective packages until installation, and handling these devices with an electrostatic-discharge wrist strap or other grounding system.

Procedure

Step 1. Connect the signal cables to the backplane.

Step 2. Install the backplane to the E3.S 2T cage.

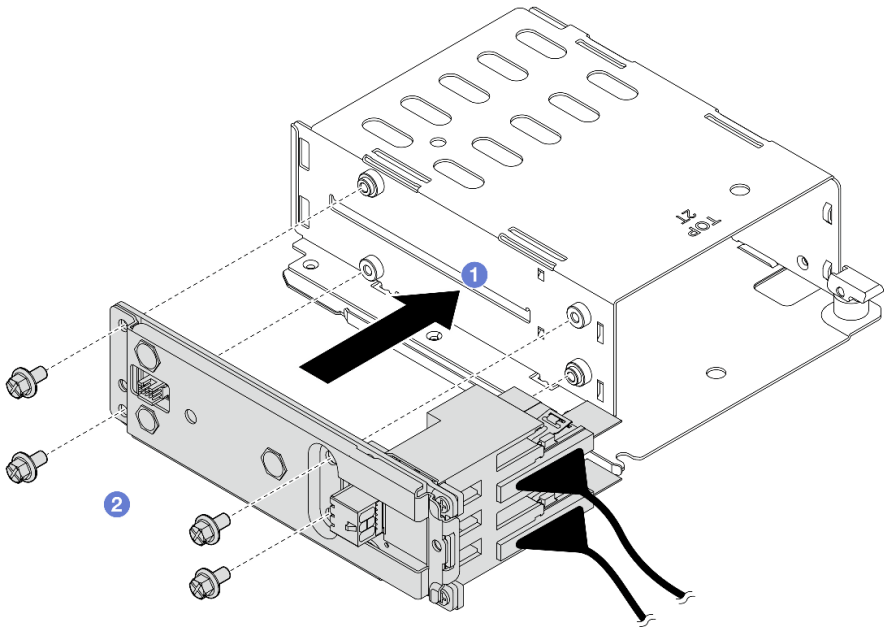

Figure 65. Installing the backplane

a. 1 Install the backplane to the cage.

b. (2) Fasten four screws to secure the backplane.

Step 3. Connect the power cable to the backplane.

Step 4. Install the E3.S 2T cage.

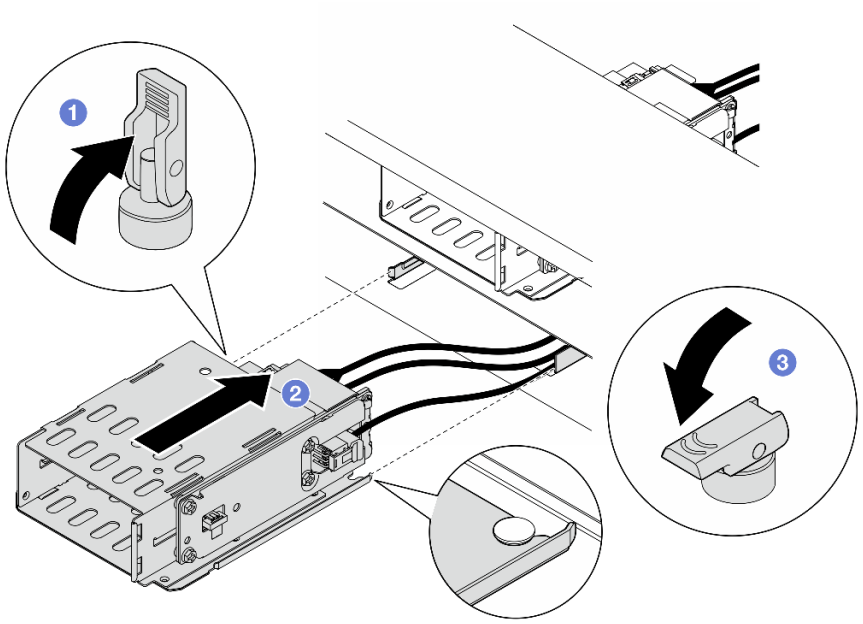

Figure 66. Installing the E3.S 2T cage

a. (1) Make sure that the latch is in the open position.

b. (2) Slide the cage into the chassis until the guide pin on the chassis is seated into place.

c. (3) Press the latch down to secure the cage.

Step 5. Connect the power and signal cables to the system board assembly. See ***Internal Cable Routing Guide***.

After you finish

1. Reinstall the system fan cage. See "Install the system fan cage" on page 334.
2. Reinstall the air baffle or middle drive cage. See "Install the air baffle" on page 56 or "Install the middle drive backplane and drive cage" on page 221.
3. Reinstall the top cover. See "Install the top cover" on page 337
4. Reinstall the CMM or CMM fillers and E3.S bezel. See "Install an E3.S non-hot-swap CMM" on page 68.
5. Complete the parts replacement. See "Complete the parts replacement" on page 341.

Demo video

Watch the procedure on YouTube

E3.S hot-swap drive replacement

Follow the instructions in this section to remove and install an E3.S hot-swap drive.

Remove an E3.S hot-swap drive

Follow the instructions in this section to remove an E3.S hot-swap drive.

About this task

Attention:

- Read “Installation Guidelines” on page 1 and “Safety inspection checklist” on page 2 to ensure that you work safely.
- To make sure that there is adequate system cooling, do not operate the server for more than two minutes without either a drive or a filler installed in each bay.
- If one or more EDSFF drives are to be removed, it is recommended to disable them beforehand via the operating system.
- Before you remove or make changes to drives, drive controllers (including controllers that are integrated on the system board), drive backplanes or drive cables, back up all important data that is stored on drives.
- Before you remove any component of a RAID array (drive, RAID card, etc.), back up all RAID configuration information.

Note: Make sure you have the drive bay fillers available if some drive bays will be left empty after the removal.

Procedure

Step 1. Remove the E3.S bezel.

a. 1 Press the button on the E3.S bezel to disengage the cover.

b. 2 Remove the E3.S bezel from the server.

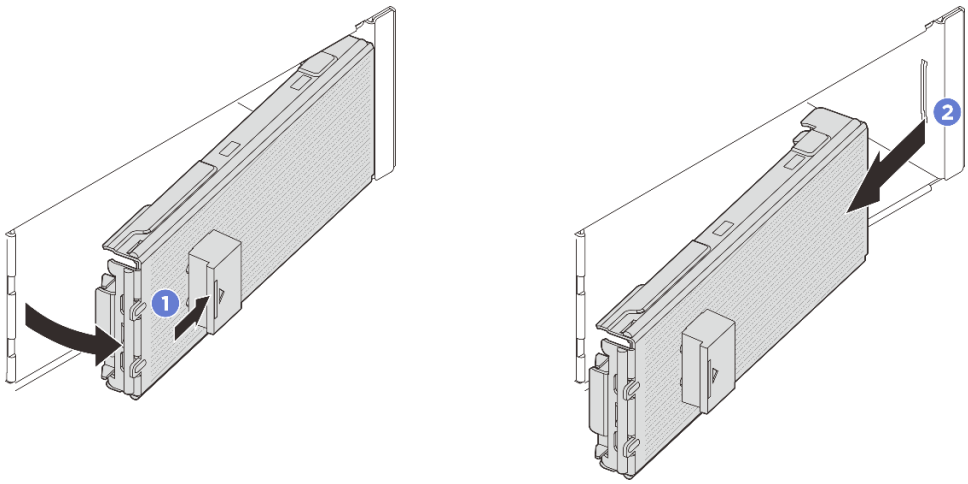

Figure 67. Removing the E3.S bezel

Step 2. Remove an E3.S hot-swap drive.

a. 1 Slide the release latch to unlock the drive handle.

b. 2 Rotate the drive handle to the open position.

c. 3 Grasp the handle and slide the drive out of the drive bay.

Note: Install a bay filler or replacement unit as soon as possible. See “Install an E3.S hot-swap drive” on page 77.

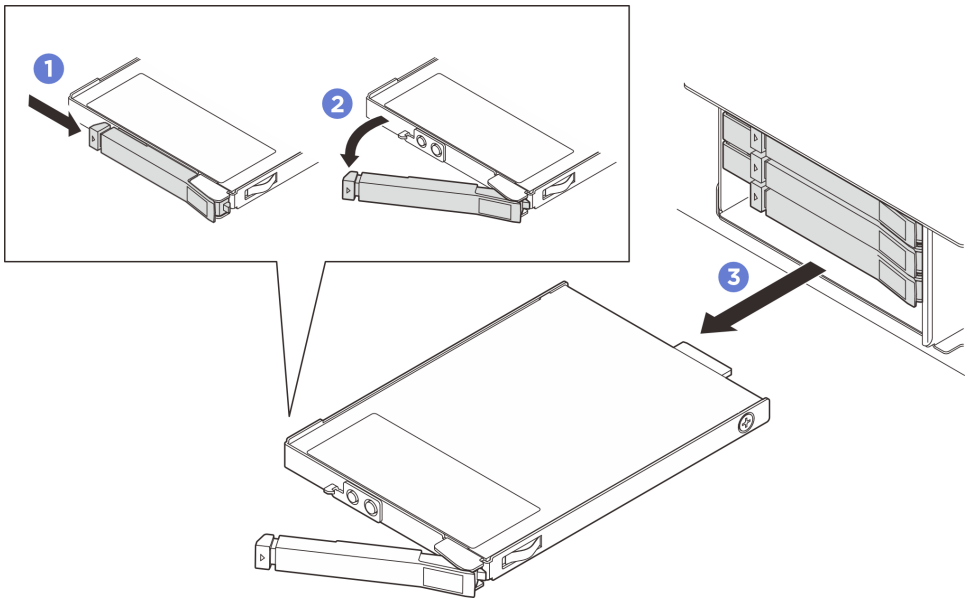

Figure 68. Removing an E3.S hot-swap drive

After you finish

If you are instructed to return the component or optional device, follow all packaging instructions, and use any packaging materials for shipping that are supplied to you.

Demo video

Watch the procedure on YouTube

Install an E3.S hot-swap drive

Follow the instructions in this section to install an E3.S hot-swap drive.

About this task

Attention:

- Read “Installation Guidelines” on page 1 and “Safety inspection checklist” on page 2 to ensure that you work safely.
- Touch the static-protective package that contains the drive to any unpainted metal surface on the solution; then, remove the drive from the package and place it on a static-protective surface.
- Make sure you save the data on your drive, especially if it is part of a RAID array, before you remove it from the server.
- To avoid damage to the drive connectors, make sure that the server top cover is in place and fully closed whenever you install or remove a drive.
- To make sure that there is adequate system cooling, do not operate the server for more than two minutes without either a drive or a drive bay filler installed in each bay.
- Before you make changes to drives, drive controllers (including controllers that are integrated on the system board), drive backplanes, or drive cables, back up all important data that is stored on drives.
- Before you remove any component of a RAID array (drive, RAID card, etc.), back up all RAID configuration information.

The following notes describe the type of drives that the server supports and other information that you must consider when you install a drive. For a list of supported drives, see https://serverproven.lenovo.com.

- Locate the documentation that comes with the drive and follow those instructions in addition to the instructions in this chapter.
- The electromagnetic interference (EMI) integrity and cooling of the solution are protected by having all bays and PCI and PCIe slots covered or occupied. When you install a drive, PCI, or PCIe adapter, save the EMC shield and filler panel from the bay or PCI or PCIe adapter slot cover in the event that you later remove the device.
- For a complete list of supported optional devices for the server, see https://serverproven.lenovo.com.
- The drive bays are numbered to indicate the installation order (starting from number “0”). See “Front view” in *User Guide* or *System Configuration Guide* for the drive bay numbering.

Firmware and driver download: You might need to update the firmware or driver after replacing a component.

- Go to https://datacentersupport.lenovo.com/products/servers/thinksystem/sr650v4/downloads/driver-list/ to see the latest firmware and driver updates for your server.
- Go to “Update the firmware” in *User Guide* or *System Configuration Guide* for more information on firmware updating tools.

Procedure

Step 1. If the E3.S bezel is installed, remove the E3.S bezel.

a. 1 Press the button on the E3.S bezel to disengage the cover.

b. 2 Remove the E3.S bezel from the server.

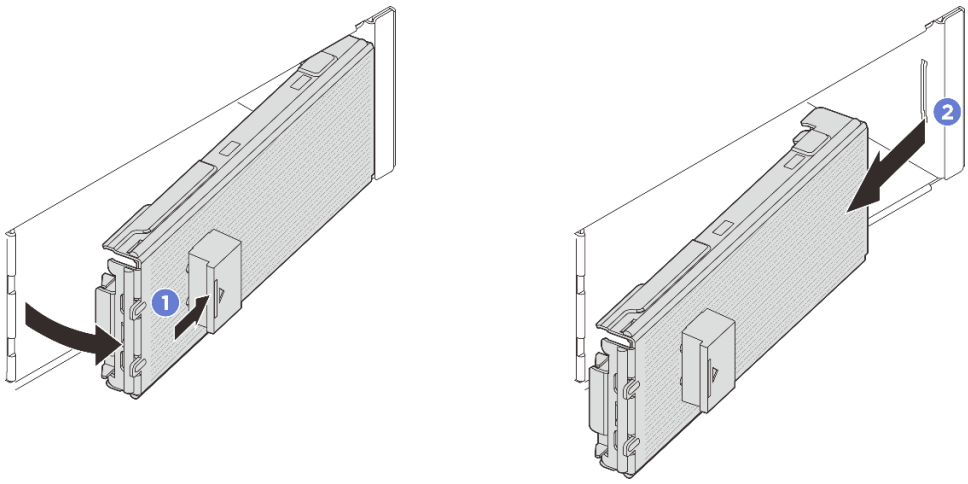

Figure 69. Removing the E3.S bezel

Step 2. If a bay filler is installed in the bay, remove the bay filler. pull the release lever on the filler and slide it out of the server.

a. 1 Pinch the release tabs on the filler.

b. 2 Slide the filler out of the bay.

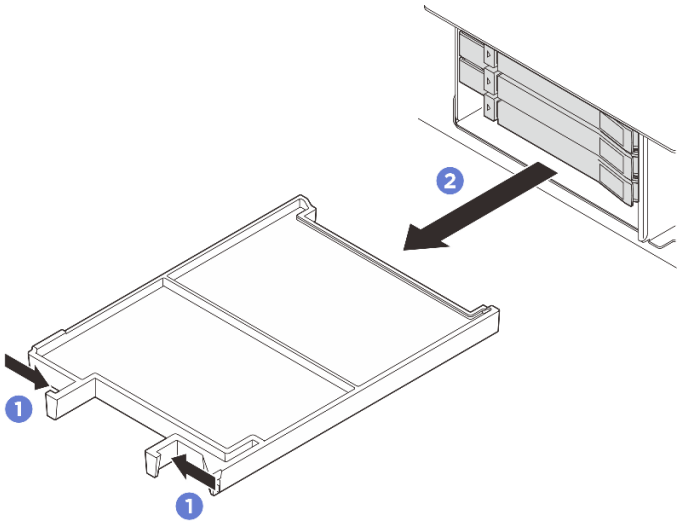

Figure 70. Removing a bay filler

Step 3. Install the E3.S hot-swap drive.

a. 1 Make sure that the drive handle is in the open position. Then, align the drive with the guide rails in the bay and gently push the drive into the bay until the drive stops.

b. 2 Rotate the drive handle to the fully closed position until the handle latch clicks.

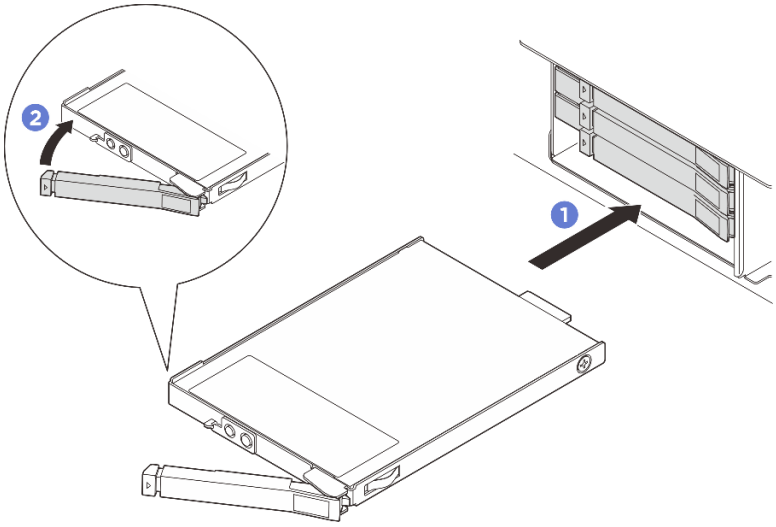

Figure 71. Installing an E3.S hot-swap drive

Step 4. If there are additional drives to install, do so now; if any of the bays is left empty, fill it with a bay filler.

- To install a bay filler, insert it into the empty bay until it is firmly seated.

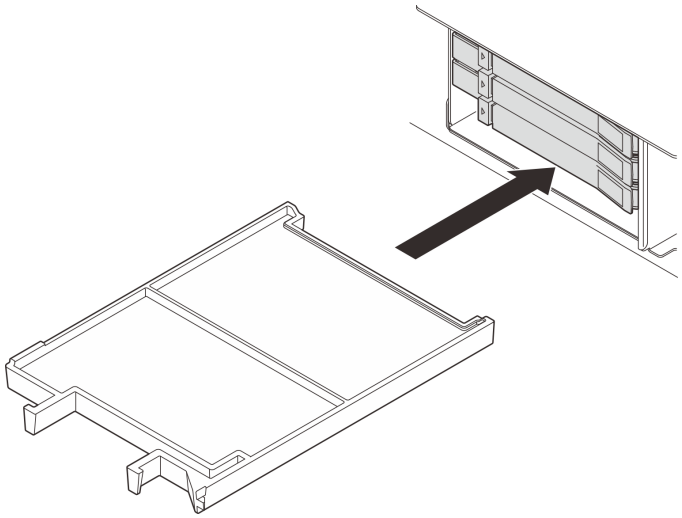

Figure 72. Installing a bay filler

Step 5. Check the drive LEDs to verify that the drive is operating correctly.

- If the yellow drive status LED is lit continuously, the drive is malfunctioning and must be replaced.
- If the green drive activity LED is flashing, the drive is functioning.

Step 6. Depending on the configuration, remove the inner plate of the E3.S bezel if necessary.

Notes:

- When the space to be covered is with E3.S 1T cage installed, the inner plate of E3.S bezel should be removed.
- For proper cooling and airflow, when the space to be covered is without E3.S 1T cage installed, the inner plate of E3.S bezel is required.

a. (1) Press the tabs to disengage the inner plate.

b. (2) Rotate the inner plate away from the E3.S bezel to remove it.

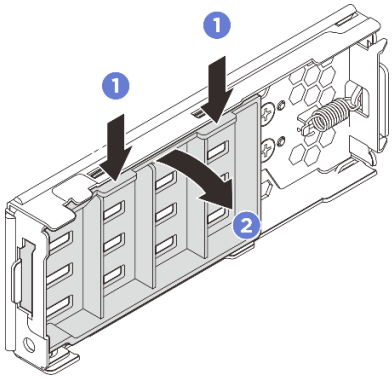

Figure 73. Removing the inner plate

Step 7. Reinstall the E3.S bezel back to the server.

a. (1) Insert the E3.S bezel into the slot.

b. (2) Rotate the E3.S bezel toward the server until it clicks into place.

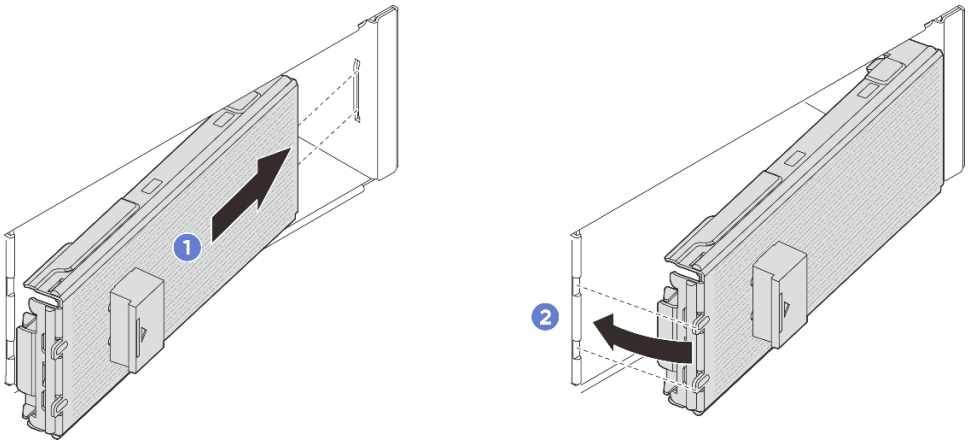

Figure 74. Installing the E3.S bezel

Important: The E3.S bezel is designed for proper EMI integrity of the server. The server models with E3.S drives should always operate with all E3.S bezels installed.

After you finish

If the server is configured for RAID operation through a ThinkSystem RAID adapter, you might have to reconfigure your disk arrays after you install drives. See the ThinkSystem RAID adapter documentation for additional information about RAID operation and complete instructions for using ThinkSystem RAID adapter.

Demo video

Watch the procedure on YouTube

E3.S drive cage and backplane replacement

Follow the instructions in this section to remove and install an E3.S drive cage and an E3.S drive backplane.

Remove an E3.S drive cage and backplane

Follow the instructions in this section to remove an E3.S drive cage and backplane.

About this task

Attention:

- Read “Installation Guidelines” on page 1 and “Safety inspection checklist” on page 2 to ensure that you work safely.
- Power off the server and peripheral devices and disconnect the power cords and all external cables. See “Power off the server” on page 27.
- Prevent exposure to static electricity, which might lead to system halt and loss of data, by keeping static-sensitive components in their static-protective packages until installation, and handling these devices with an electrostatic-discharge wrist strap or other grounding system.

Procedure

Step 1. Make preparations for this task.

a. If the server is installed in a rack, slide the server out on its rack slide rails to gain access to the top cover, or remove the server from the rack. See “Server replacement” on page 34.

b. Remove all E3.S hot-swap drives installed in the cage. See “Remove an E3.S hot-swap drive” on page 75.

c. Remove the top cover. See “Remove the top cover” on page 335.

d. Remove the fan cage. See “Remove the system fan cage” on page 333.

e. Remove the air baffle or middle drive cage. See “Remove the air baffle” on page 54 or “Remove the middle drive cage and drive backplane” on page 219.

f. Disconnect the power and signal cables from the processor board.

Attention: To avoid damaging the system board assembly, make sure to follow the instructions in ***Internal Cable Routing Guide*** when disconnecting cables from the system board assembly.

Step 2. Remove the E3.S 1T cage.

Note: An E3.S bezel without inner plate is used to cover a space with E3.S 1T cage installed. For proper cooling and airflow, make sure to reinstall an E3.S 1T cage and corresponding E3.S bezel before turning on the server. If you use an E3.S bezel without inner plate to cover a space without E3.S 1T cage, server components might be damaged during operation.

a. 1 Open the latch to disengage the cage.

b. 2 Slide the cage out of the chassis.

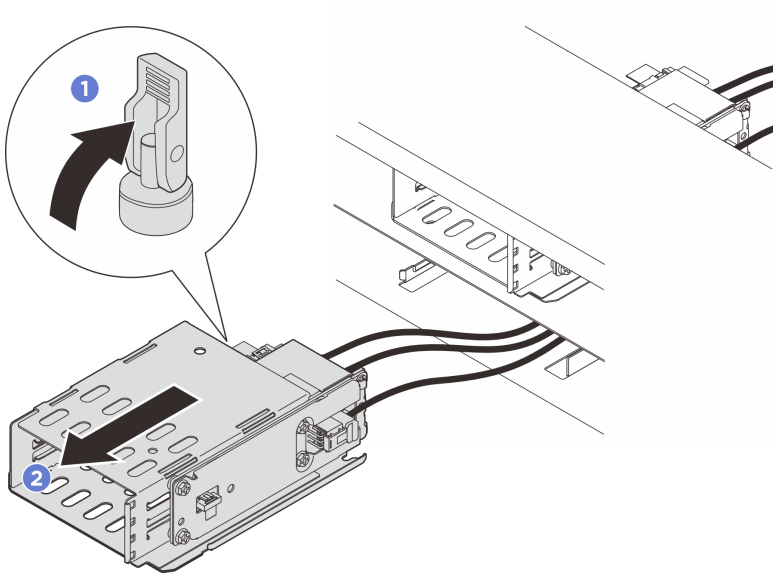

Figure 75. Removing the E3.S 1T cage

Step 3. Disconnect power and signal cables from the backplane.

Step 4. Remove the backplane assembly from the E3.S 1T cage.

a. 1 Loosen the four screws that secure the backplane assembly.

b. 2 Slide the backplane assembly away from the cage.

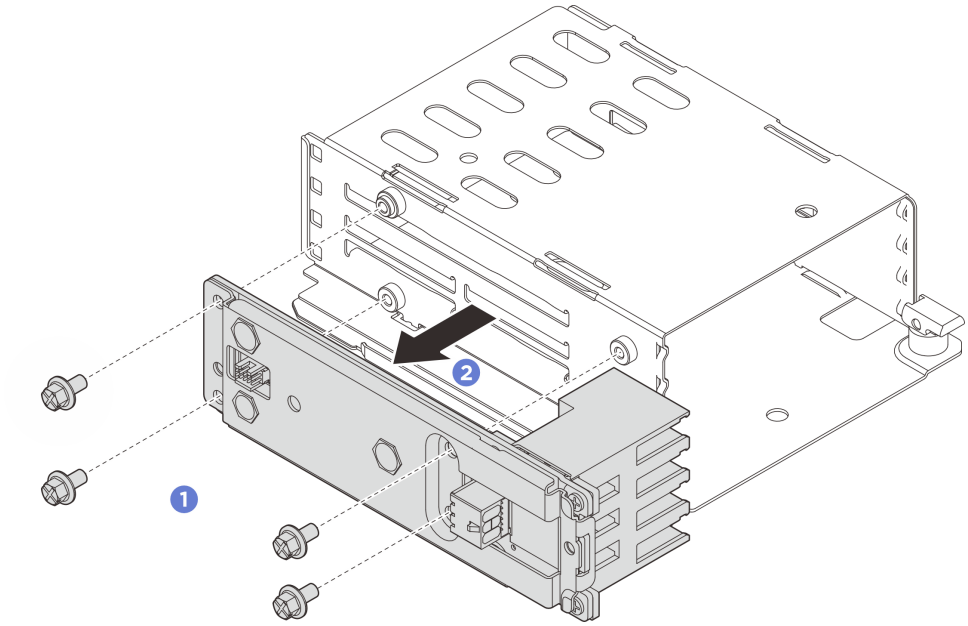

Figure 76. Removing the backplane assembly

After you finish

If you are instructed to return the component or optional device, follow all packaging instructions, and use any packaging materials for shipping that are supplied to you.

Demo video

Watch the procedure on YouTube

Install an E3.S drive cage and backplane

Follow the instructions in this section to install an E3.S drive cage and backplane.

About this task

Attention:

- Read “Installation Guidelines” on page 1 and “Safety inspection checklist” on page 2 to ensure that you work safely.
- Power off the server and peripheral devices and disconnect the power cords and all external cables. See “Power off the server” on page 27.
- Prevent exposure to static electricity, which might lead to system halt and loss of data, by keeping static-sensitive components in their static-protective packages until installation, and handling these devices with an electrostatic-discharge wrist strap or other grounding system.

Procedure

Step 1. Install the backplane assembly to the E3.S 1T cage.

a. 1 Install the backplane assembly to the cage.

b. 2 Fasten four screws to secure the backplane assembly.

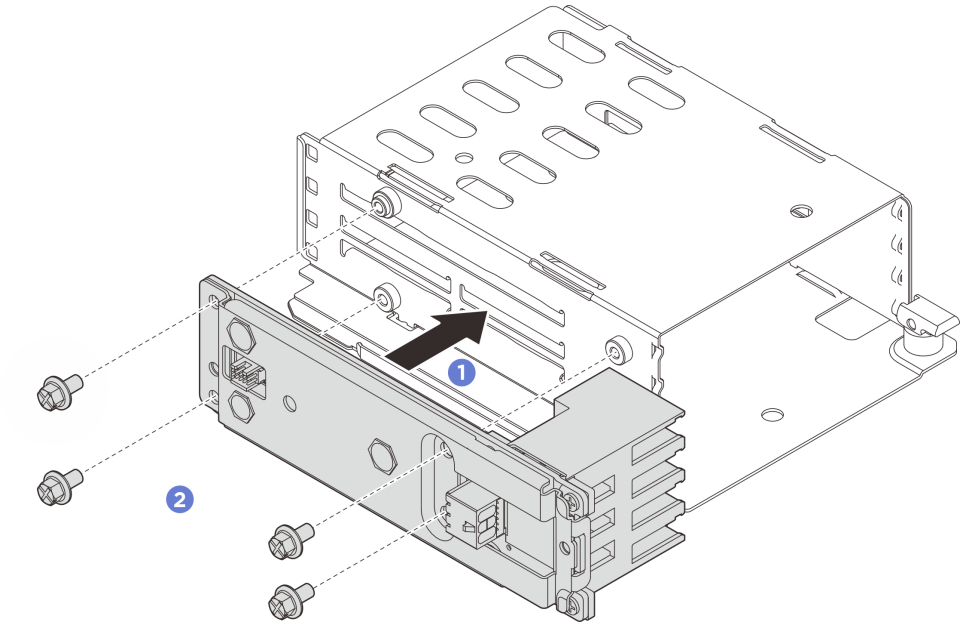

Figure 77. Installing the backplane assembly

Step 2. Connect power and signal cables to the backplane.

Step 3. Install the E3.S 1T cage.

a. Make sure that the latch is in the open position.

b. Slide the cage into the chassis until the guide pin on the chassis is seated into place.

c. Press the latch down to secure the cage.

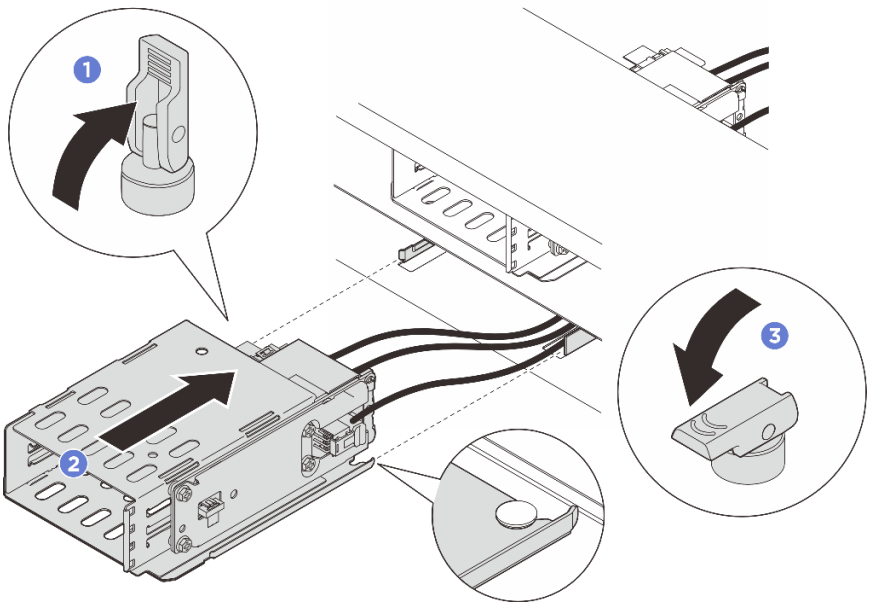

Figure 78. Installing the E3.S 1T cage

Step 4. Connect the power and signal cables to the processor board. See ***Internal Cable Routing Guide***.

After you finish

1. Reinstall the drives or drive fillers and E3.S bezel. See “Install an E3.S hot-swap drive” on page 77.
2. Complete the parts replacement. See “Complete the parts replacement” on page 341.

Demo video

Watch the procedure on YouTube

Front drive backplane replacement

Follow the instructions in this section to remove and install a front drive backplane.

- “Remove the front drive backplane” on page 85
- “Install the front drive backplane” on page 87

Remove the front drive backplane

Follow the instructions in this section to remove the front 2.5-inch or 3.5-inch drive backplane.

About this task

Attention:

- Read “Installation Guidelines” on page 1 and “Safety inspection checklist” on page 2 to ensure that you work safely.
- Power off the server and peripheral devices and disconnect the power cords and all external cables. See “Power off the server” on page 27.
- Prevent exposure to static electricity, which might lead to system halt and loss of data, by keeping static-sensitive components in their static-protective packages until installation, and handling these devices with an electrostatic-discharge wrist strap or other grounding system.

Procedure

Step 1. Make preparation for the task.

a. If the server is installed in a rack, slide the server out on its rack slide rails to gain access to the top cover, or remove the server from the rack. See “Server replacement” on page 34.

b. Remove all the installed drives and fillers (if any) from the drive bays. See “Remove a 2.5-inch or 3.5-inch hot-swap drive” on page 50.

c. Remove the top cover. See “Remove the top cover” on page 335.

d. Remove the system fan cage for easier operation if needed. See “Remove the system fan cage” on page 333.

Step 2. Record the cable connections on the backplane and then disconnect the cables from the backplane.

Step 3. Remove the front drive backplane.

Note: Depending on the specific type, your backplane might look different from the illustration.

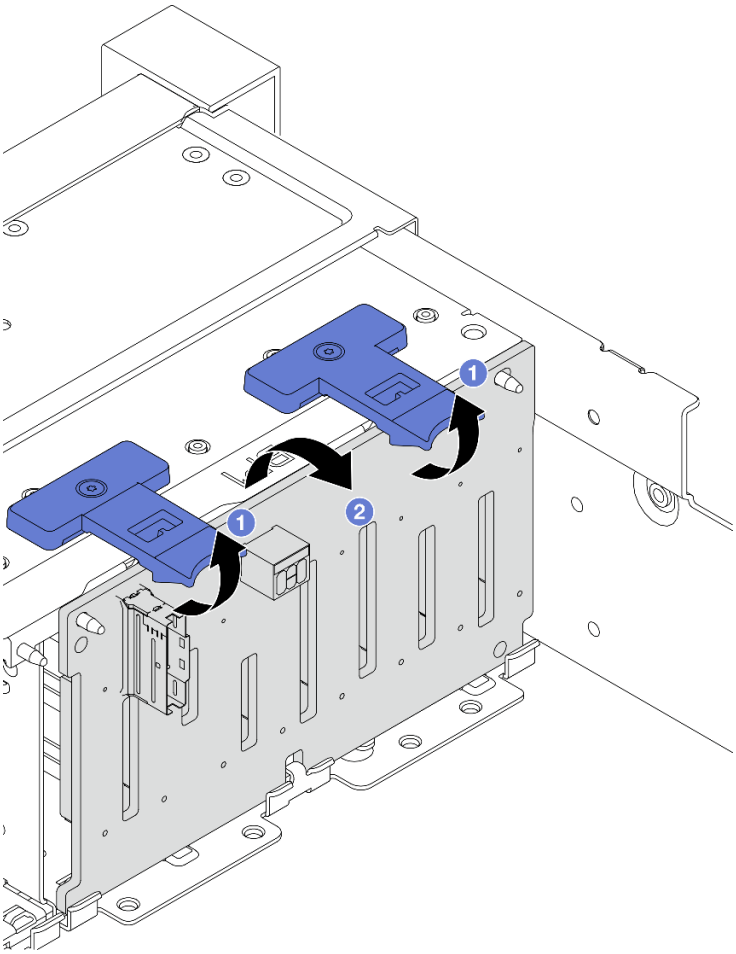

Figure 79. Removing the front 2.5-inch drive backplane

a. 1 Lift the release tabs.

b. 2 Rotate the backplane from the top to disengage it from the two pins on the chassis.

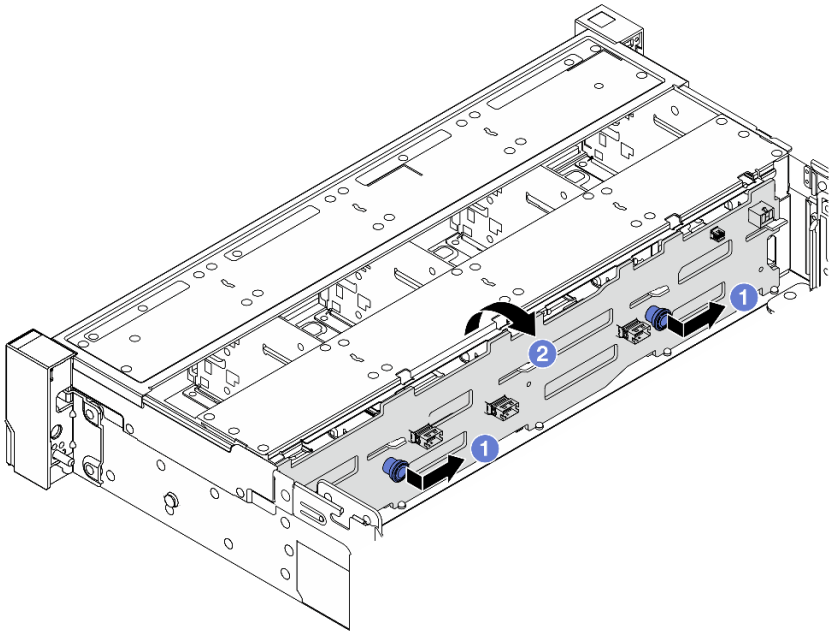

Figure 80. Removing the front 3.5-inch drive backplane

a. 1 Pull out the plungers and slightly slide the backplane to the side as shown.

b. 2 Rotate the backplane down to release it from the four hooks on the chassis. Then, carefully lift the backplane out of the chassis.

After you finish

If you are instructed to return the component or optional device, follow all packaging instructions, and use any packaging materials for shipping that are supplied to you.

Demo video

Watch the procedure on YouTube

Install the front drive backplane

Follow the instructions in this section to install the front 2.5-inch or 3.5-inch drive backplane.

About this task

- The server supports up to three front 2.5-inch drive backplanes of below types. Depending on the backplane type and quantity, the installation location of the backplanes varies.
  - 2.5-inch SAS/SATA 8-bay backplane
  - 2.5-inch AnyBay 8-bay backplane
  - 2.5-inch NVMe 8-bay backplane

  Note: The AnyBay backplane and NVMe backplane listed above use the same physical circuit board. The difference is which connectors on the backplane are cabled: NVMe and SAS/SATA, or just NVMe.
- The server supports the following types of front 3.5-inch drive backplanes:
  - 3.5-inch SAS/SATA 12-bay backplane
  - 3.5-inch AnyBay 12-bay backplane

Attention:

- Read “Installation Guidelines” on page 1 and “Safety inspection checklist” on page 2 to ensure that you work safely.
- Power off the server and peripheral devices and disconnect the power cords and all external cables. See “Power off the server” on page 27.
- Prevent exposure to static electricity, which might lead to system halt and loss of data, by keeping static-sensitive components in their static-protective packages until installation, and handling these devices with an electrostatic-discharge wrist strap or other grounding system.

Firmware and driver download: You might need to update the firmware or driver after replacing a component.

- Go to https://datacentersupport.lenovo.com/products/servers/thinksystem/sr650v4/downloads/driver-list/ to see the latest firmware and driver updates for your server.
- Go to “Update the firmware” in *User Guide* or *System Configuration Guide* for more information on firmware updating tools.

Procedure

Step 1. Touch the static-protective package that contains the new part to any unpainted surface on the outside of the server. Then, take the new part out of the package and place it on a static-protective surface.

Step 2. Install the front drive backplane.

Note: Depending on the specific type, your backplane might look different from the illustration.

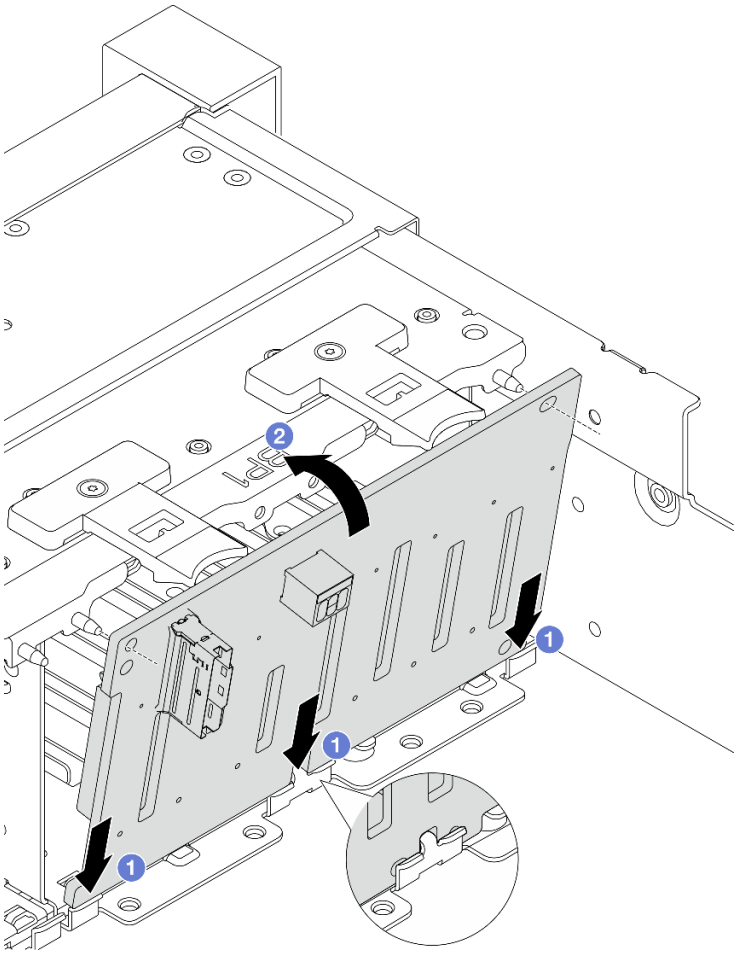

Figure 81. Installing the front 2.5-inch drive backplane

a. 1 Align the bottom of the backplane with the slots on the chassis, and lower the backplane into the chassis.

b. 2 Align the holes in the backplane with the pins on the chassis, and press the backplane into position. The release tabs will secure the backplane in place.

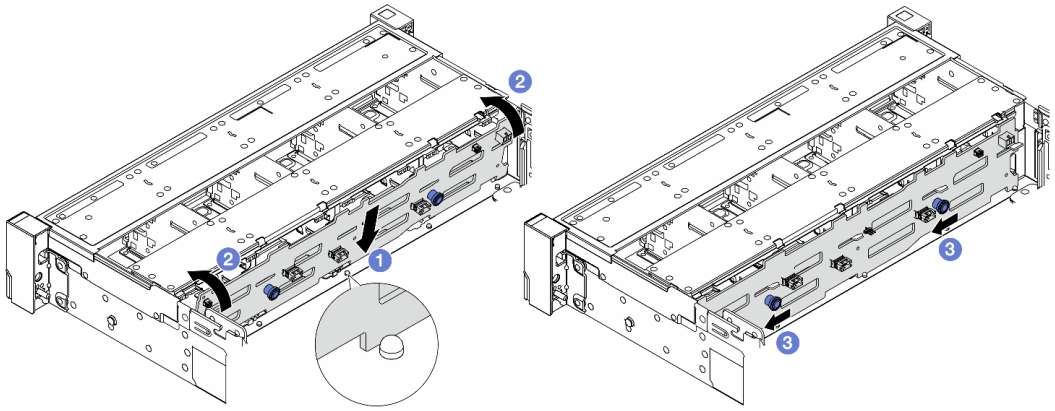

Figure 82. Installing the front 3.5-inch drive backplane

a. Align the bottom of the backplane with the chassis, and lower it into the chassis.

b. Rotate the backplane to vertical position. Ensure that the four hooks on the chassis pass through the corresponding holes in the backplane.

c. Slide the backplane as shown until it is secured into place.

Step 3. Connect the cables to the drive backplane. See ***Internal Cable Routing Guide***.

After you finish

1. Reinstall all the drives and fillers (if any) into the drive bays. See "Install a 2.5-inch or 3.5-inch hot-swap drive" on page 52.
2. Reinstall the system fan cage if you have removed it. See "Install the system fan cage" on page 334.
3. Complete the parts replacement. See "Complete the parts replacement" on page 341.

Demo video

Watch the procedure on YouTube

GPU replacement

Follow the instructions in this section to remove and install a GPU adapter in configurations with a GPU air baffle.

Note: For the replacement procedure of a GPU adapter in configurations with a standard air baffle, see "Rear riser assembly and PCIe adapter replacement" on page 289.

- "Remove a GPU adapter" on page 92
- "Install a GPU adapter" on page 95

Air baffle	Supported adapters
Standard air baffle 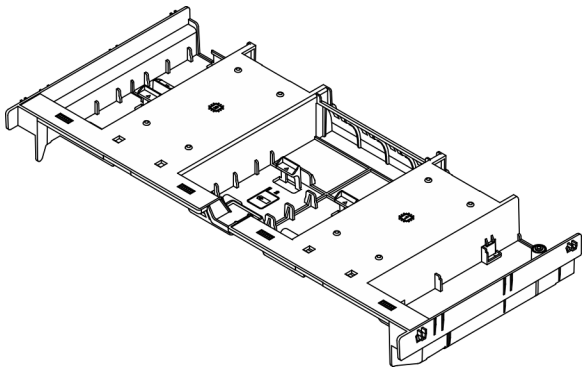	≤ 75 W
GPU air baffle 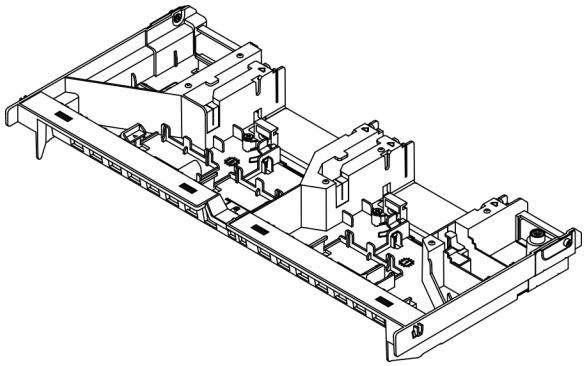	> 75 W

Depending on the usage scenario, the following fillers might need to be installed on the GPU air baffle.

Filler	Installation method
GPU air baffle filler 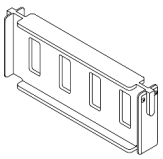 This filler is needed when no adapter is mounted on riser assembly 2 or 3.	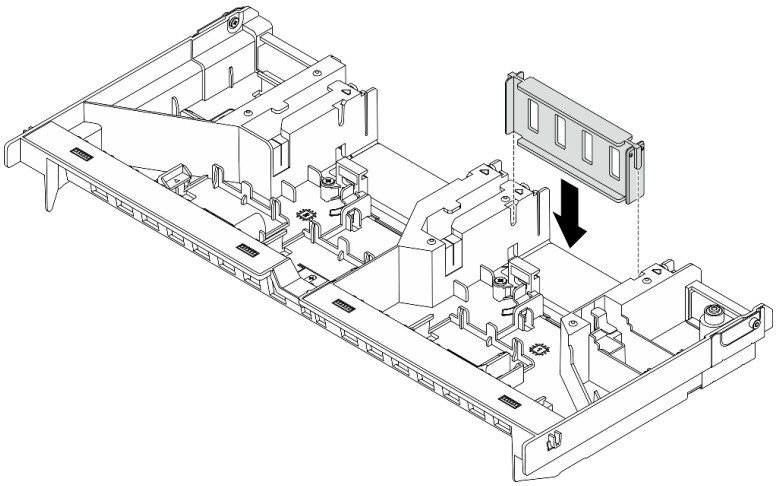
Upper slot filler 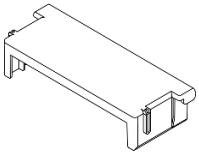 This filler is needed when an adapter with a length greater than or equal to 3/4 of full length is mounted in slot 4/7, and slot 3/6 is empty.	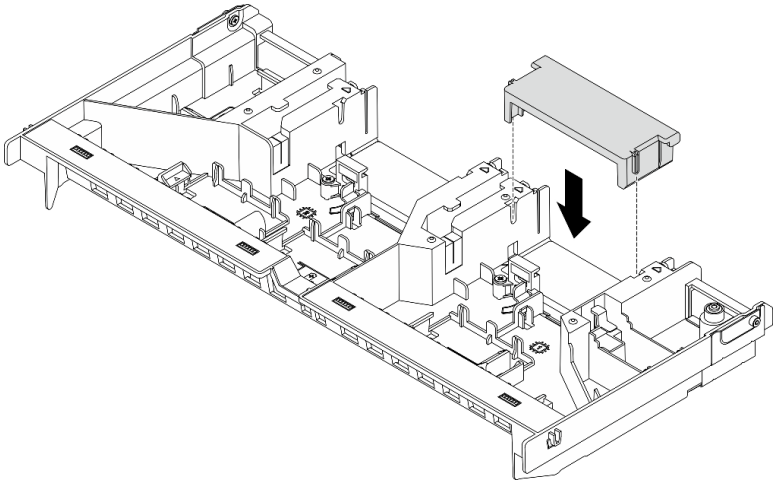
Half-length (HL) filler 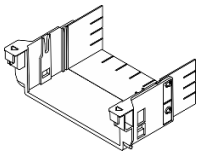 This filler is needed when a half-length adapter is mounted in slot 3/4 (riser assembly 2) or 6/7 (riser assembly 3).	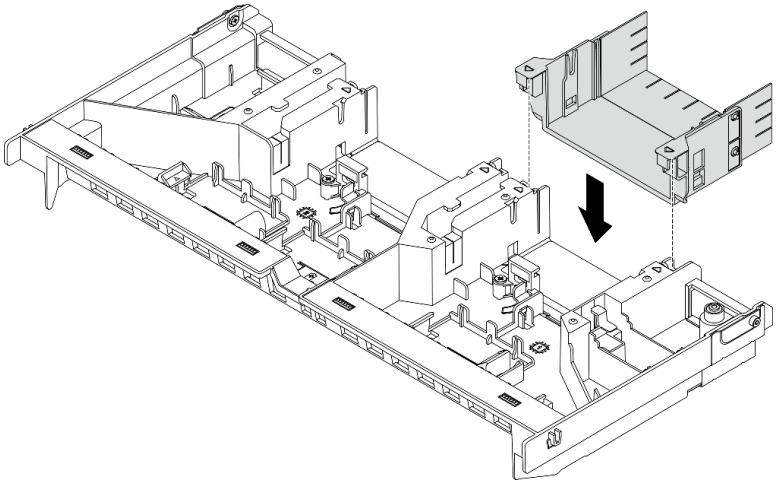

Remove a GPU adapter

Follow the instructions in this section to remove a GPU adapter.

About this task

Attention:

- Read “Installation Guidelines” on page 1 and “Safety inspection checklist” on page 2 to ensure that you work safely.
- Power off the server and peripheral devices and disconnect the power cords and all external cables. See “Power off the server” on page 27.
- Prevent exposure to static electricity, which might lead to system halt and loss of data, by keeping static-sensitive components in their static-protective packages until installation, and handling these devices with an electrostatic-discharge wrist strap or other grounding system.

Procedure

Note: Depending on the specific type, your GPU adapter might be different from that shown in the illustrations.

Step 1. Make preparation for the task.

a. If the server is installed in a rack, slide the server out on its rack slide rails to gain access to the top cover, or remove the server from the rack. See “Server replacement” on page 34.

b. Remove the top cover. See “Remove the top cover” on page 335.

c. Remove the GPU power cable from the GPU adapter.

Note: The GPU power cable is needed only when GPU power is greater than or equal to 75 W.

Step 2. Remove the riser assembly that has the GPU adapter installed.

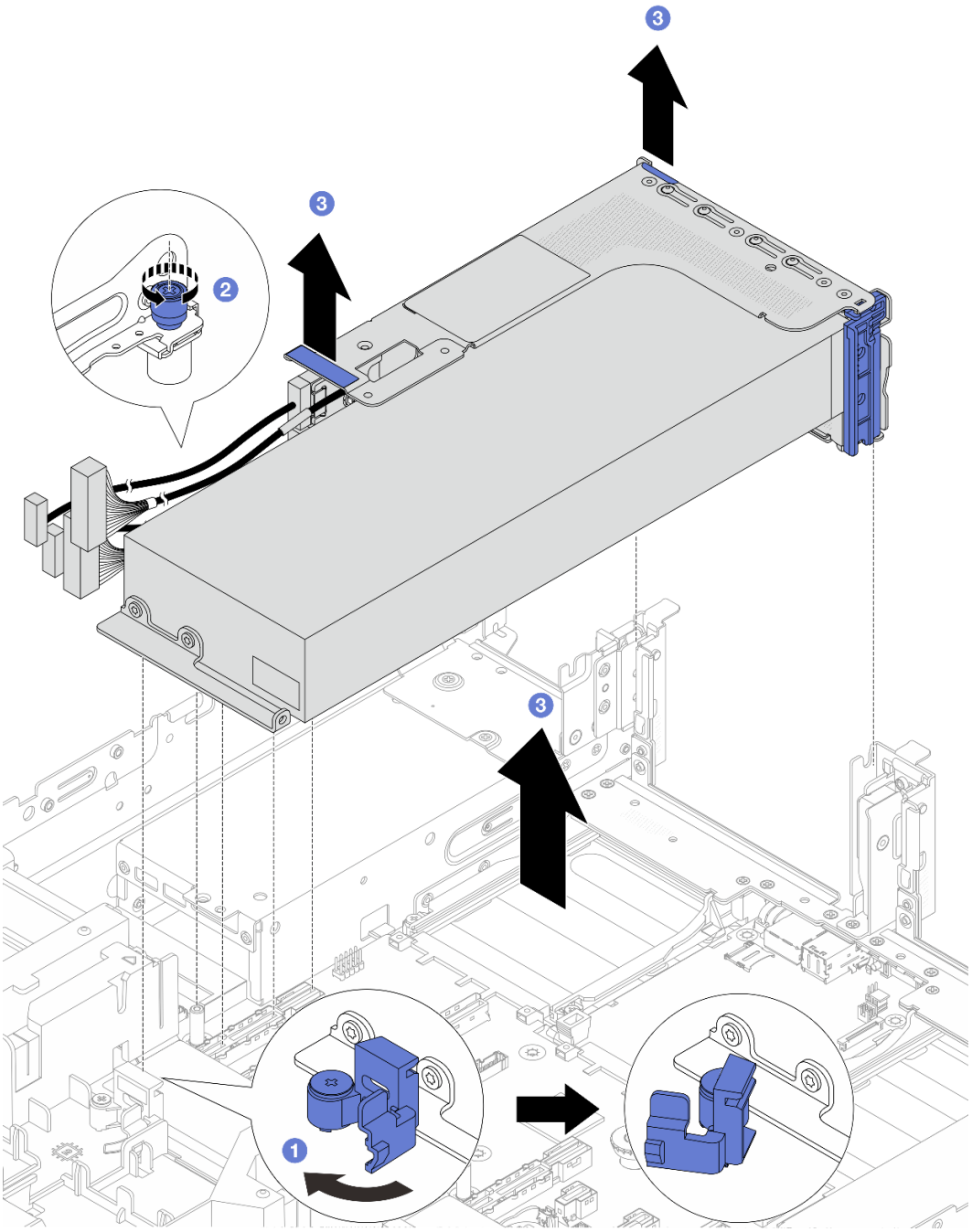

Figure 83. Removing the riser assembly

a. 1 Open the blue latch on the GPU air baffle.

b. 2 Loosen the screw that secures the riser assembly.

c. 3 Slightly lift the riser assembly up and disconnect riser card cables from the processor board. Then, lift the riser assembly out of the chassis.

Attention: To avoid damaging the system board assembly, make sure to follow the instructions in ***Internal Cable Routing Guide*** when disconnecting cables from the system board assembly.

Step 3. Remove the GPU adapter from the riser cage.

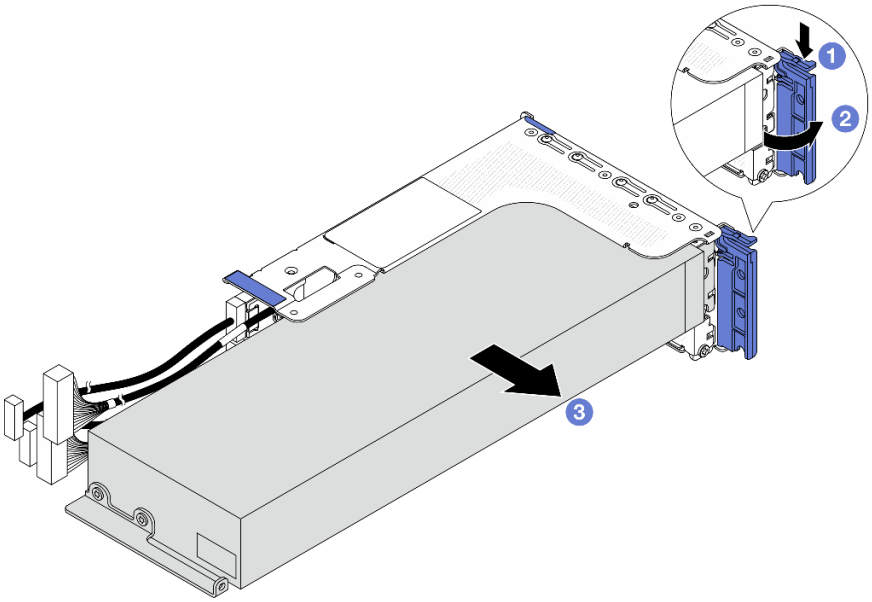

Figure 84. Removing the GPU adapter

a. 1 Press the retainer clip downward.

b. 2 Rotate the retention latch to the open position.

c. 3 Grasp the GPU adapter by its edges and carefully pull it out of the PCIe slot.

After you finish

If you are instructed to return the component or optional device, follow all packaging instructions, and use any packaging materials for shipping that are supplied to you.

Demo video

Watch the procedure on YouTube

Install a GPU adapter

Follow the instructions in this section to install a GPU adapter.

About this task

Higher GPU power requires higher PSU power. Use Lenovo Capacity Planner to calculate the required power capacity for what is configured for the server. More information about Lenovo Capacity Planner is available at:

https://datacentersupport.lenovo.com/solutions/lnvo-lcp

Attention:

- Read “Installation Guidelines” on page 1 and “Safety inspection checklist” on page 2 to ensure that you work safely.

- Power off the server and peripheral devices and disconnect the power cords and all external cables. See “Power off the server” on page 27.
- Prevent exposure to static electricity, which might lead to system halt and loss of data, by keeping static-sensitive components in their static-protective packages until installation, and handling these devices with an electrostatic-discharge wrist strap or other grounding system.
- GPU adapters are supported on some server models with requirements. See “Thermal rules” on page 17.

Procedure

Note: Depending on the specific type, your GPU adapter might be different from that shown in the illustrations.

Step 1. Touch the static-protective package that contains the new part to any unpainted surface on the outside of the server. Then, take the new part out of the package and place it on a static-protective surface.

Step 2. (Optional) Install a required filler on the GPU air baffle. For details, see “GPU replacement” on page 90.

Step 3. Locate the appropriate PCIe slot for the new GPU adapter. See “PCIe slots and PCIe adapters” on page 12

Step 4. Install the GPU adapter into the PCIe slot on the riser card.

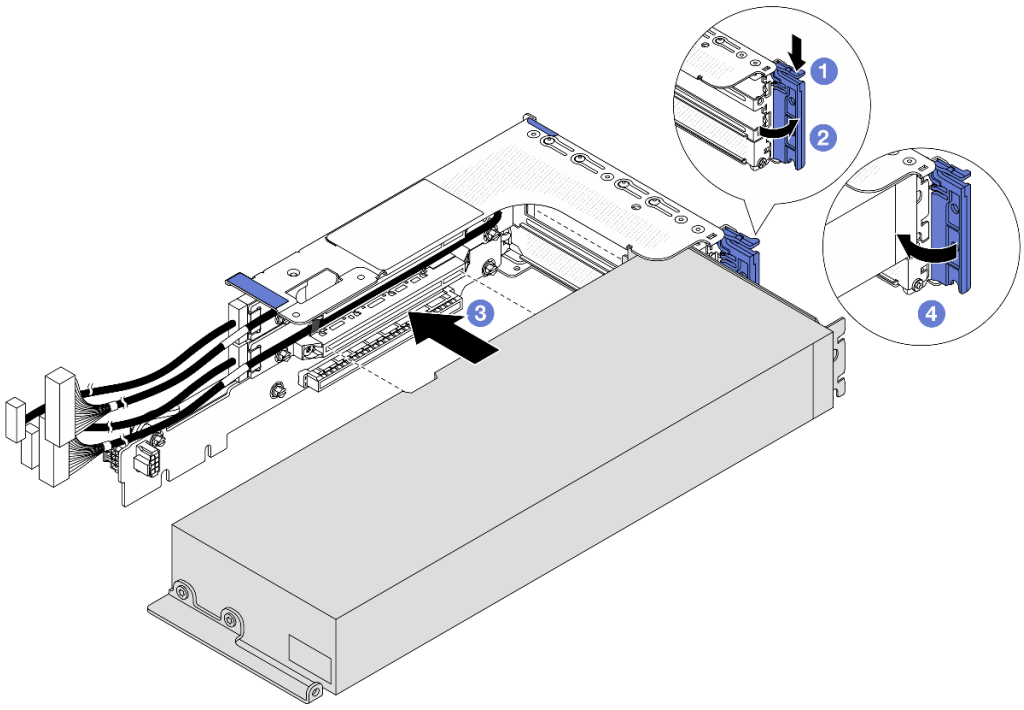

Figure 85. Installing the GPU adapter

a. 1 Press the retainer clip downward.

b. 2 Rotate the retention latch to the open position.

c. 3 Align the GPU adapter with the PCIe slot on the riser card. Then, carefully press the GPU adapter straight into the slot until it is securely seated.

d. 4 Close the blue latch.

Step 5. Connect riser card cables to the processor board. See ***Internal Cable Routing Guide***.

Step 6. Install the riser assembly with GPU adapter.

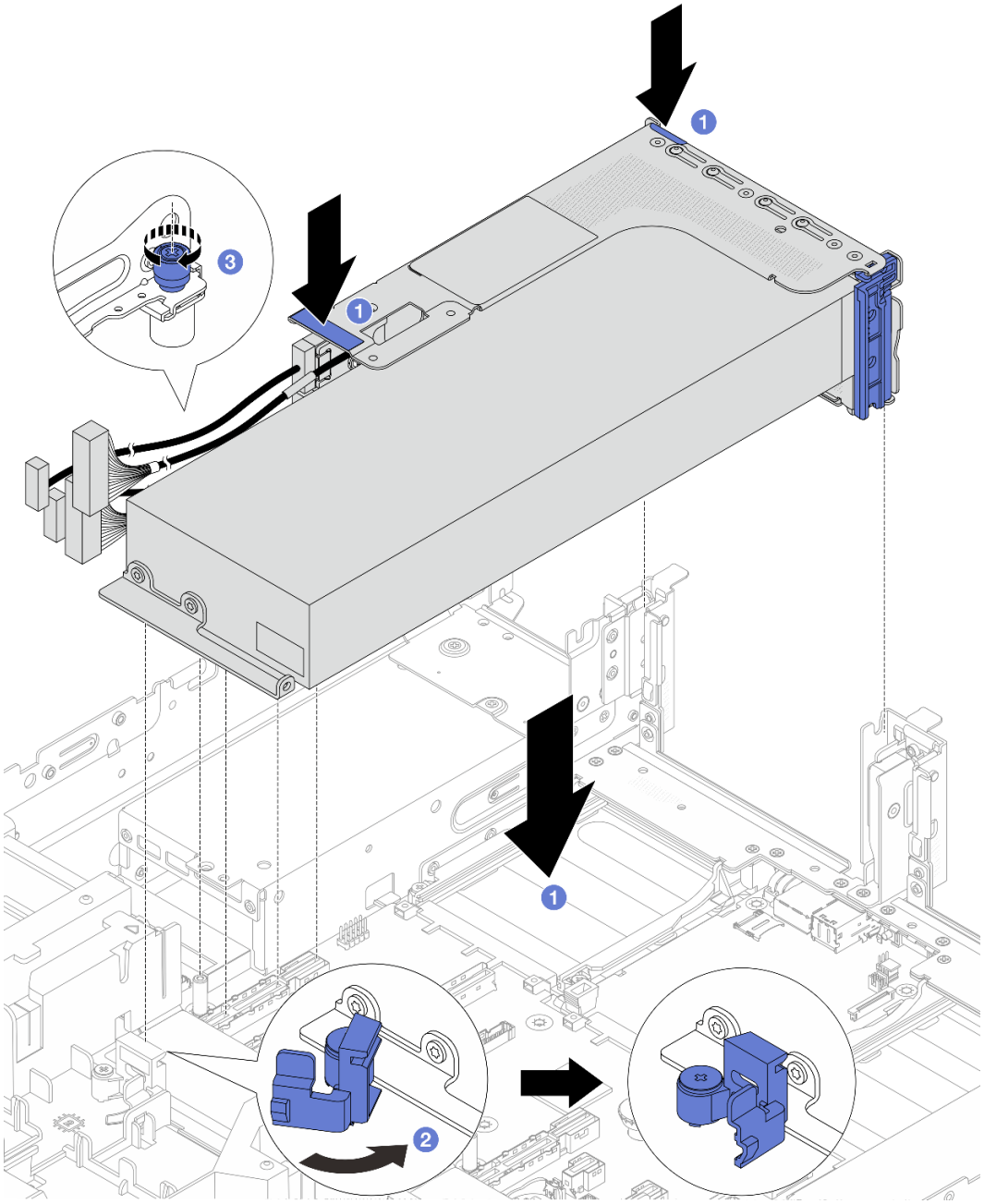

Figure 86. Installing the riser assembly with GPU adapter

a. 1 Lower the riser assembly into the chassis.

b. 2 Close the blue latch on the GPU air baffle to fix the end of the GPU adapter.

c. 3 Tighten the screw to fix the riser assembly.

Step 7. Connect the GPU power cable to the GPU adapter. See ***Internal Cable Routing Guide***.

Note: The GPU power cable is needed only when GPU power is greater than or equal to 75 W.

After you finish

Complete the parts replacement. See “Complete the parts replacement” on page 341.

Demo video

Watch the procedure on YouTube

Heat sink Torx T30 nut replacement

Follow the instructions in this section to remove and install a heat sink Torx T30 nut.

- “Remove a heat sink Torx T30 nut” on page 98
- “Install a heat sink Torx T30 nut” on page 99

Remove a heat sink Torx T30 nut

Follow the instructions in this section to remove a PEEK (Polyether ether ketone) Torx T30 nut on the heat sink.

About this task

Attention:

- Read “Installation Guidelines” on page 1 and “Safety inspection checklist” on page 2 to ensure that you work safely.
- Power off the server and peripheral devices and disconnect the power cords and all external cables. See “Power off the server” on page 27.
- Prevent exposure to static electricity, which might lead to system halt and loss of data, by keeping static-sensitive components in their static-protective packages until installation, and handling these devices with an electrostatic-discharge wrist strap or other grounding system.
- Do not touch the processor contacts. Contaminants on the processor contacts, such as oil from your skin, can cause connection failures.

Note: The heat sink, processor, and processor carrier for your system might be different from those shown in the illustrations.

Procedure

Step 1. Make preparations for this task.

a. Remove the top cover. See “Remove the top cover” on page 335.

b. Remove the air baffle. See Remove the air baffle.

c. Remove the PHM. See Remove a processor and heat sink.

Step 2. Remove the Torx T30 nut.

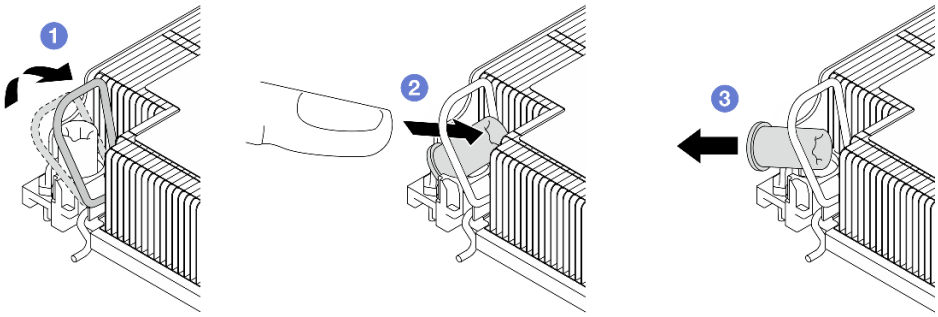

Figure 87. Removing a Torx T30 nut from the heat sink

Note: Do not touch the gold contacts on the bottom of the processor.

a. 1 Rotate the anti-tilt wire bail inwards.

b. 2 Push the upper edge of the Torx T30 nut towards the center of the heat sink until it disengages.

c. 3 Remove the Torx T30 nut.

Attention: Visually inspect the removed Torx T30 nut. If the nut is cracked or damaged, make sure no debris or broken pieces are left inside the server.

After you finish

1. Install a new Torx T30 nut. See "Install a heat sink Torx T30 nut" on page 99.
2. If you are instructed to return the component or optional device, follow all packaging instructions, and use any packaging materials for shipping that are supplied to you.

Demo video

Watch the procedure on YouTube

Install a heat sink Torx T30 nut

Follow the instructions in this section to install a PEEK (Polyether ether ketone) Torx T30 nut on the heat sink.

About this task

Attention:

- Read "Installation Guidelines" on page 1 and "Safety inspection checklist" on page 2 to ensure that you work safely.
- Power off the server and peripheral devices and disconnect the power cords and all external cables. See "Power off the server" on page 27.
- Prevent exposure to static electricity, which might lead to system halt and loss of data, by keeping static-sensitive components in their static-protective packages until installation, and handling these devices with an electrostatic-discharge wrist strap or other grounding system.
- Do not touch the processor contacts. Contaminants on the processor contacts, such as oil from your skin, can cause connection failures.

Note: The heat sink, processor, and processor carrier for your system might be different from those shown in the illustrations.

Firmware and driver download: You might need to update the firmware or driver after replacing a component.

- Go to https://datacentersupport.lenovo.com/products/servers/thinksystem/sr650v4/downloads/driver-list/ to see the latest firmware and driver updates for your server.
- Go to "Update the firmware" in *User Guide* or *System Configuration Guide* for more information on firmware updating tools.

Procedure

Step 1. Install the Torx T30 nut.

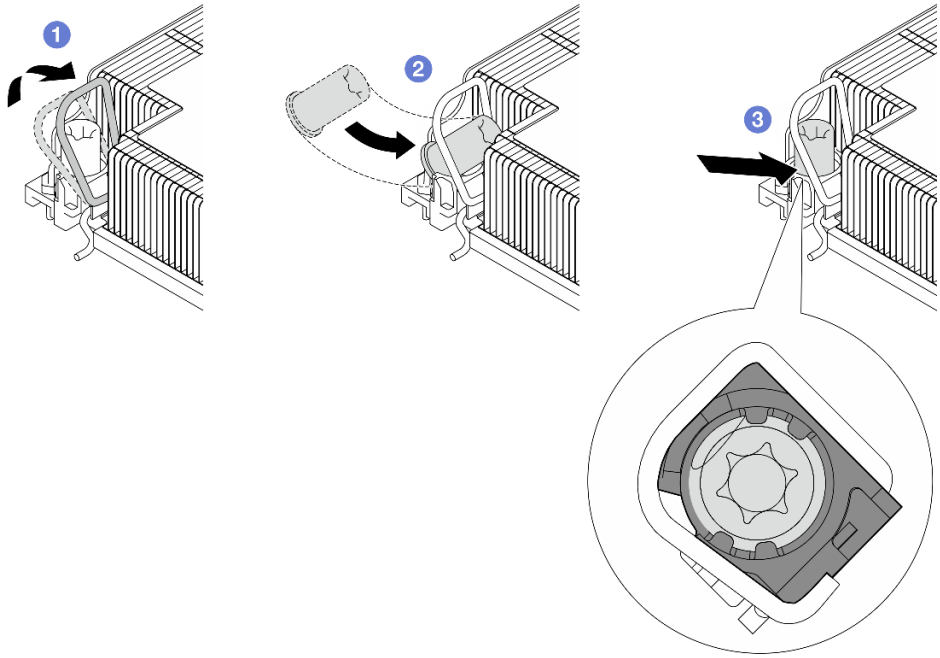

Figure 88. Installing a Torx T30 nut into the heat sink

Note: Do not touch the gold contacts on the bottom of the processor.

a. 1 Rotate the anti-tilt wire bail inwards.

b. 2 Orient the Torx T30 nut under the anti-tilt wire bail; then, align the Torx T30 nut with the socket at an angle as shown.

c. 3 Push the lower edge of the Torx T30 nut into the socket until it clicks into place. Make sure the Torx T30 nut is secured under the four clips in the socket.

After you finish

1. Reinstall the PHM. See "Install a processor and heat sink" on page 242.
2. Complete the parts replacement. See "Complete the parts replacement" on page 341.

Demo video

Watch the procedure on YouTube

Internal CFF adapter replacement

Follow the instructions in this section to remove and install an internal custom form factor (CFF) RAID adapter, internal CFF HBA adapter, or internal CFF RAID expander adapter.

The server supports RAID/HBA adapters in two form factors:

- Custom form factor (CFF): RAID/HBA adapters in this form factor are installed between the front backplane and fan cage.
- Standard form factor (SFF): RAID/HBA adapters in this form factor are installed in the PCIe expansion slots. See “Rear riser assembly and PCIe adapter replacement” on page 289.

Remove an internal CFF adapter

Follow the instructions in this section to remove an internal CFF RAID adapter, internal CFF HBA adapter, or internal CFF RAID expander adapter.

About this task

Attention:

- Read “Installation Guidelines” on page 1 and “Safety inspection checklist” on page 2 to ensure that you work safely.
- Power off the server and peripheral devices and disconnect the power cords and all external cables. See “Power off the server” on page 27.
- Prevent exposure to static electricity, which might lead to system halt and loss of data, by keeping static-sensitive components in their static-protective packages until installation, and handling these devices with an electrostatic-discharge wrist strap or other grounding system.
- Before you remove or make changes to drives, drive controllers (including controllers that are integrated on the system board assembly), drive backplanes or drive cables, back up all important data that is stored on drives.
- Before you remove any component of a RAID array (drive, RAID card, etc.), back up all RAID configuration information.

Procedure

Step 1. Make preparation for the task.

a. If the server is installed in a rack, slide the server out on its rack slide rails to gain access to the top cover, or remove the server from the rack. See “Server replacement” on page 34.

b. Remove the top cover. See “Remove the top cover” on page 335.

c. Record the cable connections for cables from or crossing over the adapter; then, disconnect all the cables.

Attention: To avoid damaging the system board assembly, make sure to follow the instructions in ***Internal Cable Routing Guide*** when disconnecting cables from the system board assembly.

Step 2. Lift the touch point, slightly slide the adapter as shown, and carefully lift it out of the chassis.

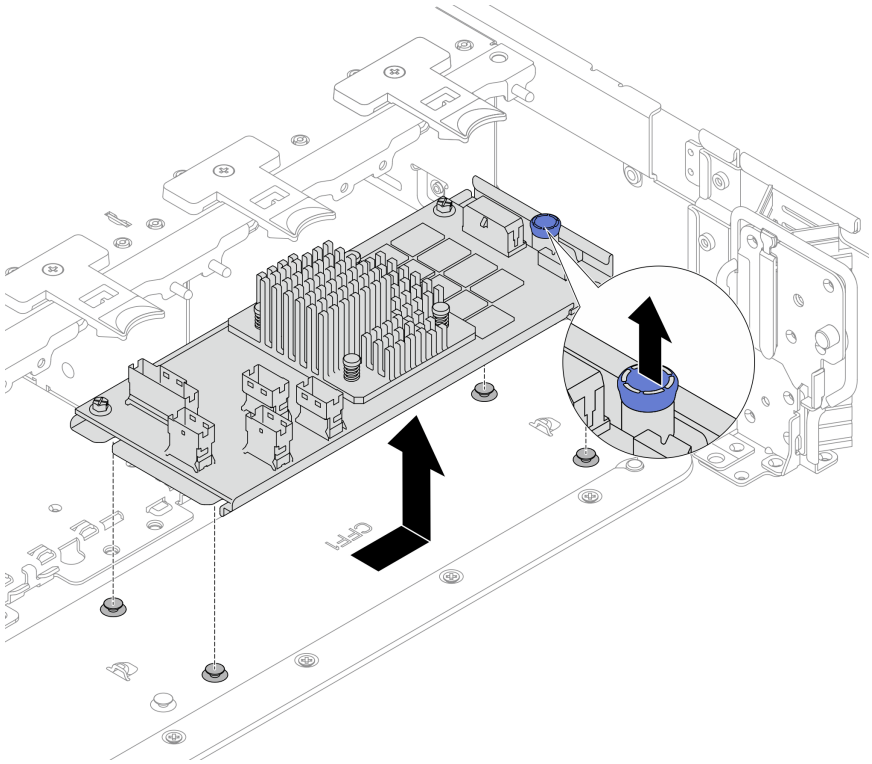

Figure 89. Removing the internal CFF adapter

After you finish

If you are instructed to return the component or optional device, follow all packaging instructions, and use any packaging materials for shipping that are supplied to you.

Demo video

Watch the procedure on YouTube

Install an internal CFF adapter

Follow the instructions in this section to install an internal CFF RAID adapter, internal CFF HBA adapter, or internal CFF RAID expander adapter.

About this task

Attention:

- Read “Installation Guidelines” on page 1 and “Safety inspection checklist” on page 2 to ensure that you work safely.
- Power off the server and peripheral devices and disconnect the power cords and all external cables. See “Power off the server” on page 27.
- Prevent exposure to static electricity, which might lead to system halt and loss of data, by keeping static-sensitive components in their static-protective packages until installation, and handling these devices with an electrostatic-discharge wrist strap or other grounding system.
- Before you remove or make changes to drives, drive controllers (including controllers that are integrated on the system board assembly), drive backplanes or drive cables, back up all important data that is stored on drives.

- The CFF adapter is supported only in the 2.5-inch drive bay chassis.

Firmware and driver download: You might need to update the firmware or driver after replacing a component.

- Go to https://datacentersupport.lenovo.com/products/servers/thinksystem/sr650v4/downloads/driver-list/ to see the latest firmware and driver updates for your server.
- Go to "Update the firmware" in *User Guide* or *System Configuration Guide* for more information on firmware updating tools.

Procedure

Step 1. Touch the static-protective package that contains the new part to any unpainted surface on the outside of the server. Then, take the new part out of the package and place it on a static-protective surface.

Note: The adapter is shipped with and preinstalled on a mounting bracket. Before installing the adapter, check and ensure that the adapter is fixed in place. If there are any loosen screws, tighten the screws using a No.1 Phillips torque screwdriver. The maximum torque value is 4.8 ± 0.5 inch-pounds.

Step 2. Align the notches on the mounting bracket with the pins on the chassis, place down the adapter, and slightly slide it as shown to secure it on the chassis.

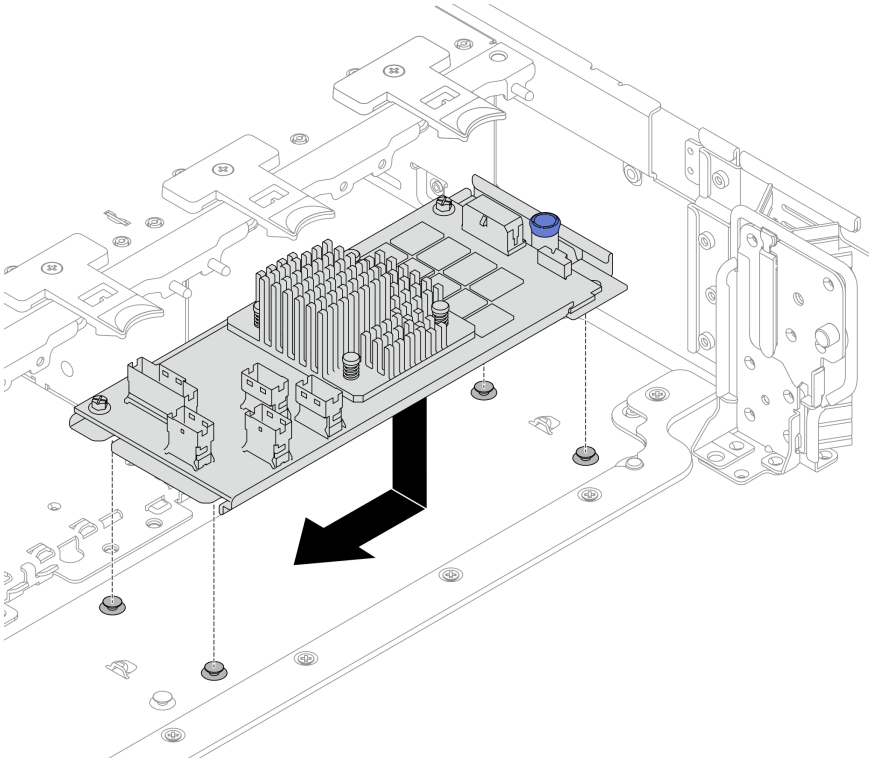

Figure 90. Installing the internal CFF adapter

Step 3. Connect cables to the adapter. See ***Internal Cable Routing Guide***.

After you finish

Complete the parts replacement. See "Complete the parts replacement" on page 341.

Demo video

Watch the procedure on YouTube

Internal M.2 drive and M.2 backplane replacement

Follow the instructions in this section to remove and install the internal M.2 drive and M.2 backplane.

The server supports the following M.2 backplanes. This section uses the M.2 RAID SATA/NVME 2-bay backplane as an example for illustration. The replacement procedure for the other M.2 backplane is the same.

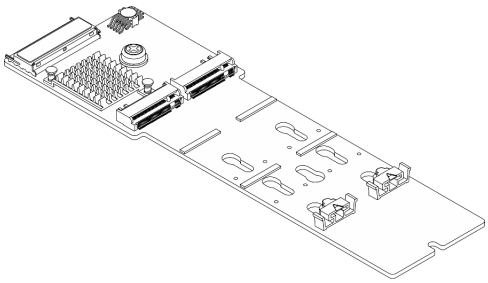	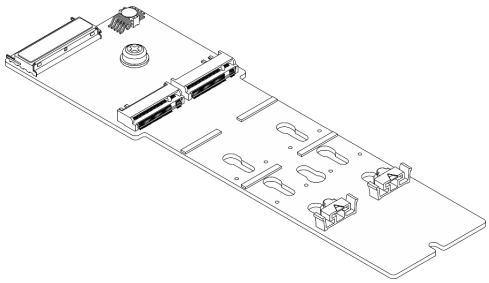
M.2 RAID SATA/NVME 2-bay backplane	M.2 non-RAID SATA/NVMe 2-bay backplane

- "Remove an M.2 drive" on page 104
- "Install an M.2 drive" on page 105
- "Remove the M.2 backplane" on page 107
- "Install the M.2 backplane" on page 110

Remove an M.2 drive

Follow the instructions in this section to remove an M.2 drive.

About this task

Attention:

- Read "Installation Guidelines" on page 1 and "Safety inspection checklist" on page 2 to ensure that you work safely.
- Power off the server and peripheral devices and disconnect the power cords and all external cables. See "Power off the server" on page 27.
- Prevent exposure to static electricity, which might lead to system halt and loss of data, by keeping static-sensitive components in their static-protective packages until installation, and handling these devices with an electrostatic-discharge wrist strap or other grounding system.

Procedure

Step 1. If the server is installed in a rack, slide the server out on its rack slide rails to gain access to the top cover, or remove the server from the rack. See "Server replacement" on page 34.

Step 2. Remove the top cover. See "Remove the top cover" on page 335.

Step 3. Remove the M.2 drive from the M.2 backplane.

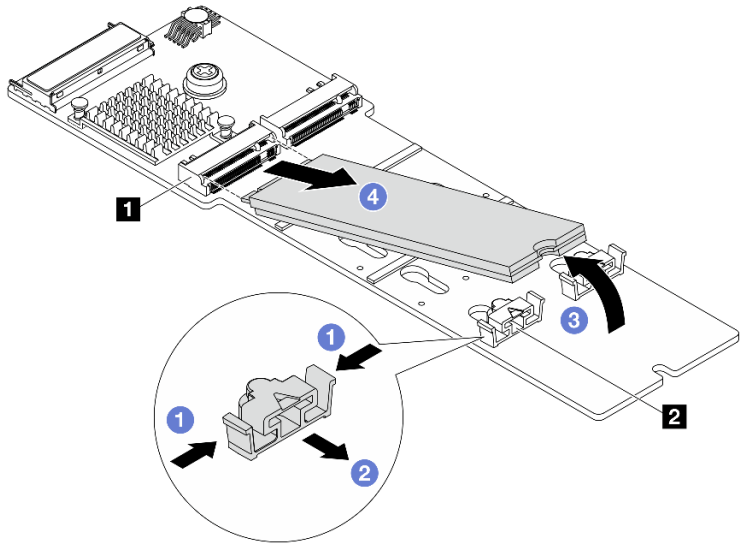

Figure 91. Removing the M.2 drive

a. 1 Press both sides of the retainer 2.
b. 2 Slide the retainer backward to loosen the M.2 drive from the M.2 backplane.
c. 3 Rotate the M.2 drive away from the M.2 backplane.
d. 4 Pull the M.2 drive away from the connector 1 at an angle of approximately 30 degrees.

After you finish

1. Install a new M.2 drive. See "Install an M.2 drive" on page 105.
2. If you are instructed to return the component or optional device, follow all packaging instructions, and use any packaging materials for shipping that are supplied to you.

Demo video

Watch the procedure on YouTube

Install an M.2 drive

Follow the instructions in this section to install an M.2 drive.

Attention:

- Read "Installation Guidelines" on page 1 and "Safety inspection checklist" on page 2 to ensure that you work safely.
- Power off the server and peripheral devices and disconnect the power cords and all external cables. See "Power off the server" on page 27.
- Prevent exposure to static electricity, which might lead to system halt and loss of data, by keeping static-sensitive components in their static-protective packages until installation, and handling these devices with an electrostatic-discharge wrist strap or other grounding system.

Firmware and driver download: You might need to update the firmware or driver after replacing a component.

- Go to https://datacentersupport.lenovo.com/products/servers/thinksystem/sr650v4/downloads/driver-list/ to see the latest firmware and driver updates for your server.
- Go to "Update the firmware" in *User Guide* or *System Configuration Guide* for more information on firmware updating tools.

Procedure

Step 1. Touch the static-protective package that contains the new part to any unpainted surface on the outside of the server. Then, take the new part out of the package and place it on a static-protective surface.

Step 2. (Optional) Adjust the retainer on the M.2 backplane to accommodate the particular size of the M.2 drive you wish to install.

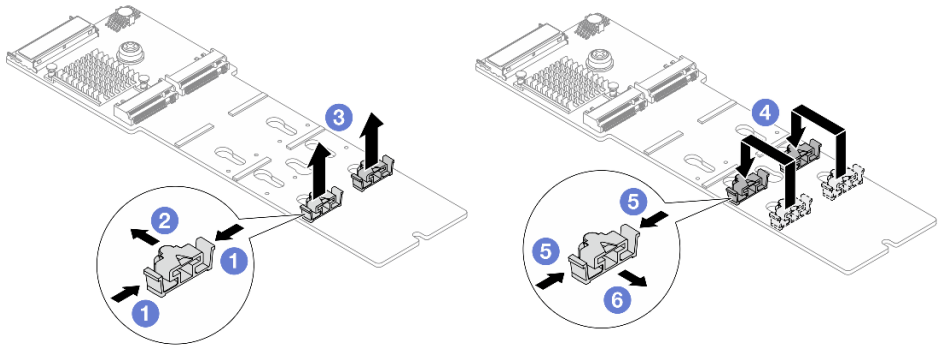

Figure 92. Adjusting the M.2 retainer

a. 1 Press both sides of the retainer.
b. 2 Move the retainer to the larger opening of the keyhole.
c. 3 Take the retainer out of the keyhole.
d. 4 Insert the retainer into the suitable keyhole.
e. 5 Press both sides of the retainer.
f. 6 Slide the retainer until it is seated into the smaller opening of the keyhole.

Step 3. Locate the M.2 drive slot on the M.2 backplane.

Note: Some M.2 backplanes support two identical M.2 drives. Install the M.2 drive in slot 0 first.

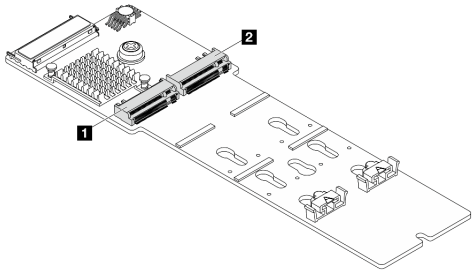

1 Slot 0
2 Slot 1

Figure 93. M.2 drive slots

Step 4. Install the M.2 drive on the M.2 backplane.

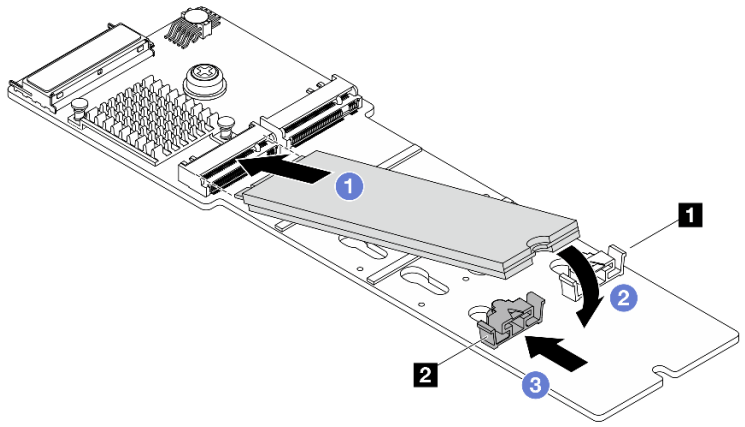

Figure 94. Installing the M.2 drive

a. 1 Insert the M.2 drive at an angle of approximately 30 degrees into the connector.
b. 2 Rotate the M.2 drive down until the notch 1 catches on the lip of the retainer 2.
c. 3 Slide the retainer toward the connector to secure the M.2 drive into place.

After you finish

Complete the parts replacement. See "Complete the parts replacement" on page 341.

Demo video

Watch the procedure on YouTube

Remove the M.2 backplane

Follow the instructions in this section to remove the M.2 backplane.

About this task

Attention:

- Read "Installation Guidelines" on page 1 and "Safety inspection checklist" on page 2 to ensure that you work safely.
- Power off the server and peripheral devices and disconnect the power cords and all external cables. See "Power off the server" on page 27.
- Prevent exposure to static electricity, which might lead to system halt and loss of data, by keeping static-sensitive components in their static-protective packages until installation, and handling these devices with an electrostatic-discharge wrist strap or other grounding system.

Procedure

Step 1. If the server is installed in a rack, slide the server out on its rack slide rails to gain access to the top cover, or remove the server from the rack. See "Server replacement" on page 34.
Step 2. Remove the top cover. See "Remove the top cover" on page 335.
Step 3. Disconnect the M.2 cable from the M.2 backplane.

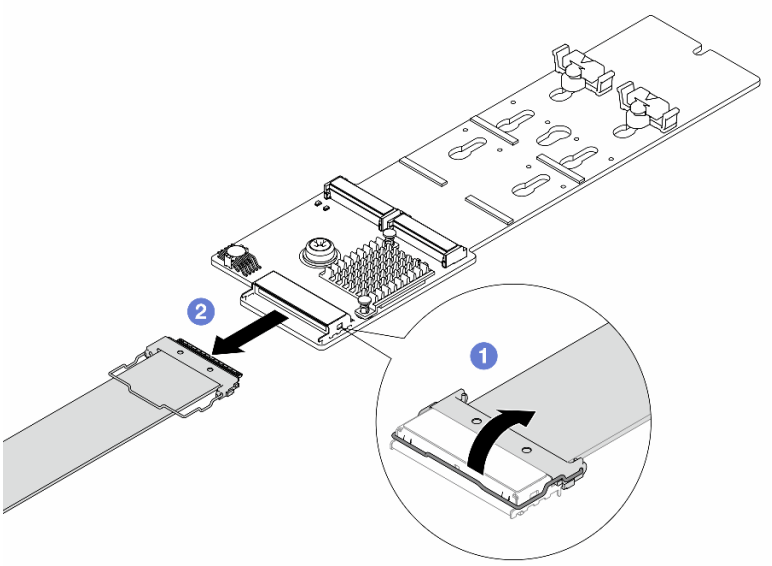

Figure 95. Disconnecting the M.2 cable

a. 1 Pull up the latch on the M.2 cable.

b. 2 Disconnect the M.2 cable from the M.2 backplane.

Step 4. Remove the M.2 backplane.

M.2 backplane on the air baffle

1. Remove the M.2 drive from the M.2 backplane. See “Remove an M.2 drive” on page 104.
2. Remove the M.2 backplane from the air baffle.

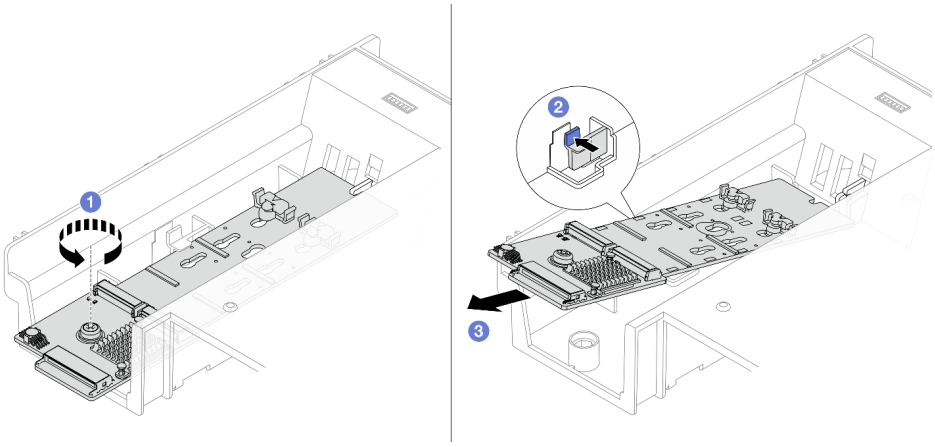

Figure 96. Removing the M.2 backplane from the air baffle

a. 1 Loosen the screw.

b. 2 Press the retention clip to release the M.2 backplane.

c. 3 Remove the M.2 backplane from the air baffle.

M.2 backplane on the middle drive cage

1. Open the drive cage handle.

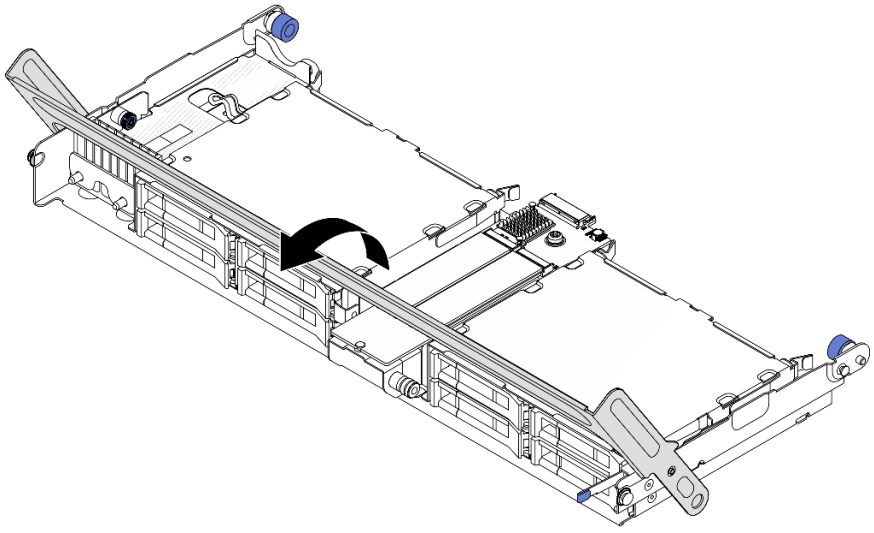

Figure 97. Opening the handle of the middle drive cage

2. Remove the M.2 drive from the M.2 backplane. See “Remove an M.2 drive” on page 104.
3. Remove the M.2 backplane from the middle drive cage.

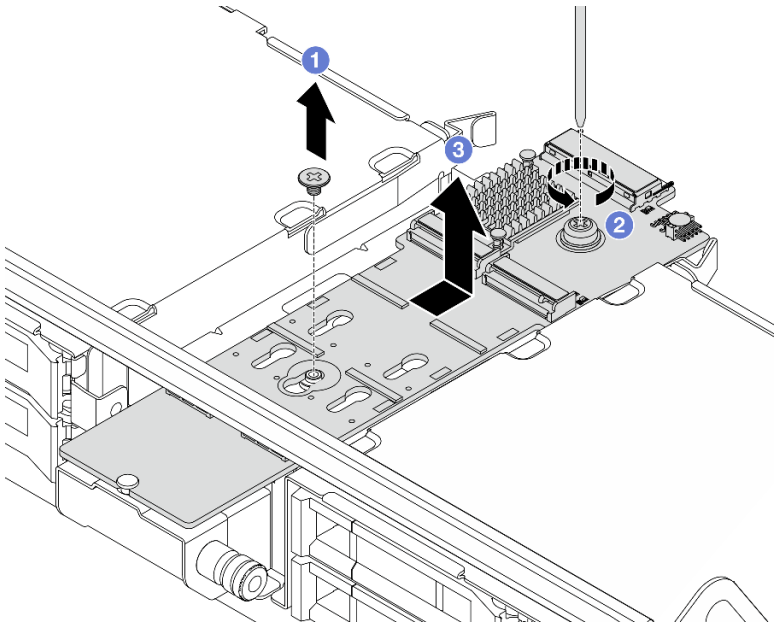

Figure 98. Removing the M.2 backplane from the middle drive cage

a. 1 Remove the screw on the middle of M.2 backplane.
b. 2 Loosen the screw on the end of the M.2 backplane.
c. 3 Remove the M.2 backplane from the middle drive cage in the direction as shown.

After you finish

1. Install a new M.2 backplane. See “Install the M.2 backplane” on page 110.

2. If you are instructed to return the component or optional device, follow all packaging instructions, and use any packaging materials for shipping that are supplied to you.

Demo video

Watch the procedure on YouTube

Install the M.2 backplane

Follow the instructions in this section to install the M.2 backplane.

About this task

Attention:

- Read “Installation Guidelines” on page 1 and “Safety inspection checklist” on page 2 to ensure that you work safely.
- Power off the server and peripheral devices and disconnect the power cords and all external cables. See “Power off the server” on page 27.
- Prevent exposure to static electricity, which might lead to system halt and loss of data, by keeping static-sensitive components in their static-protective packages until installation, and handling these devices with an electrostatic-discharge wrist strap or other grounding system.

Firmware and driver download: You might need to update the firmware or driver after replacing a component.

- Go to https://datacentersupport.lenovo.com/products/servers/thinksystem/sr650v4/downloads/driver-list/ to see the latest firmware and driver updates for your server.
- Go to “Update the firmware” in *User Guide* or *System Configuration Guide* for more information on firmware updating tools.

Procedure

Step 1. Touch the static-protective package that contains the new part to any unpainted surface on the outside of the server. Then, take the new part out of the package and place it on a static-protective surface.

Step 2. Install the M.2 backplane.

M.2 backplane on the air baffle

1. Install the M.2 backplane on the air baffle.

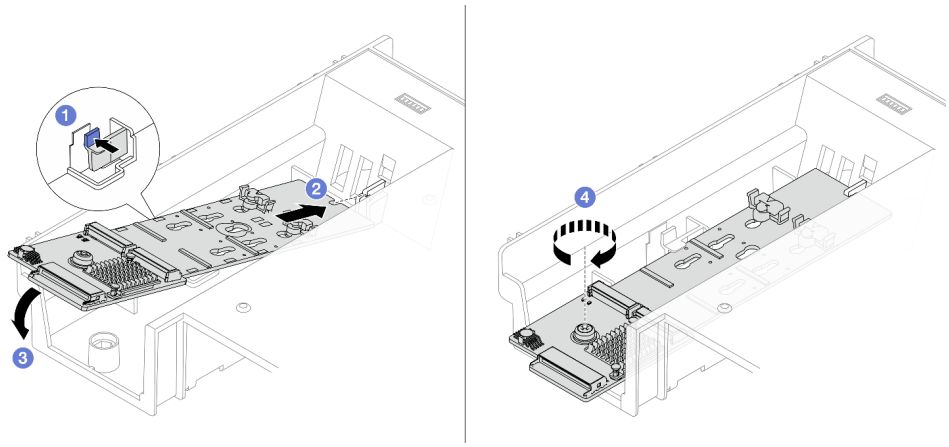

Figure 99. Installing the M.2 backplane on the air baffle

a. 1 Press the retention clip on the air baffle.

b. 2 Align the guide hole on the M.2 backplane with the guide pin on the air baffle, and insert the backplane into the air baffle.

c. 3 Rotate the M.2 backplane downward into place.

d. 4 Tighten the screw to secure the M.2 backplane.

2. Install the M.2 drive on the M.2 backplane. See "Install an M.2 drive" on page 105.

M.2 backplane on the middle drive cage

1. Install the M.2 backplane on the middle drive cage.

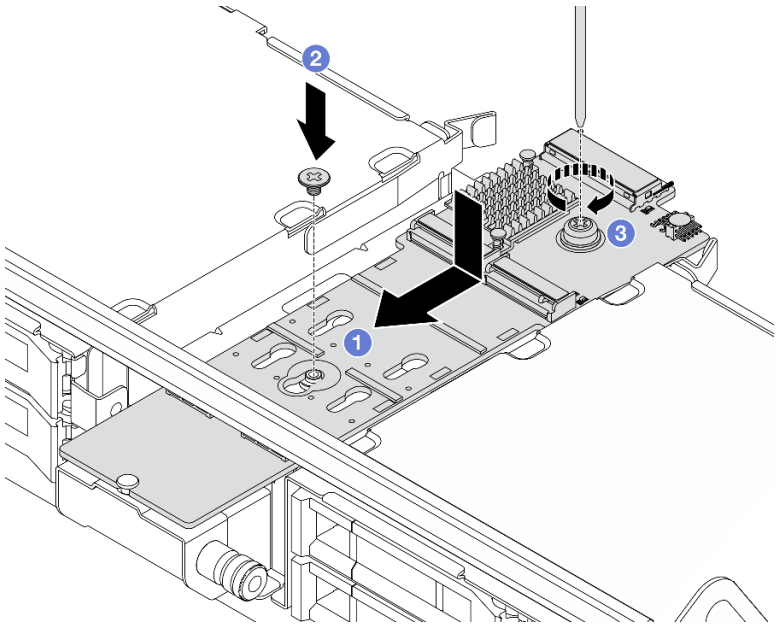

Figure 100. Installing the M.2 backplane on the middle drive cage

a. 1 Align the guide hole on the M.2 backplane with the pin on the drive cage, and insert the backplane into the drive cage.

b. 2 Install the screw on the middle of the M.2 backplane.

c. 3 Tighten the screw on the end of the M.2 backplane.

2. Install the M.2 drive on the M.2 backplane. See “Install an M.2 drive” on page 105.
3. Close the drive cage handle.

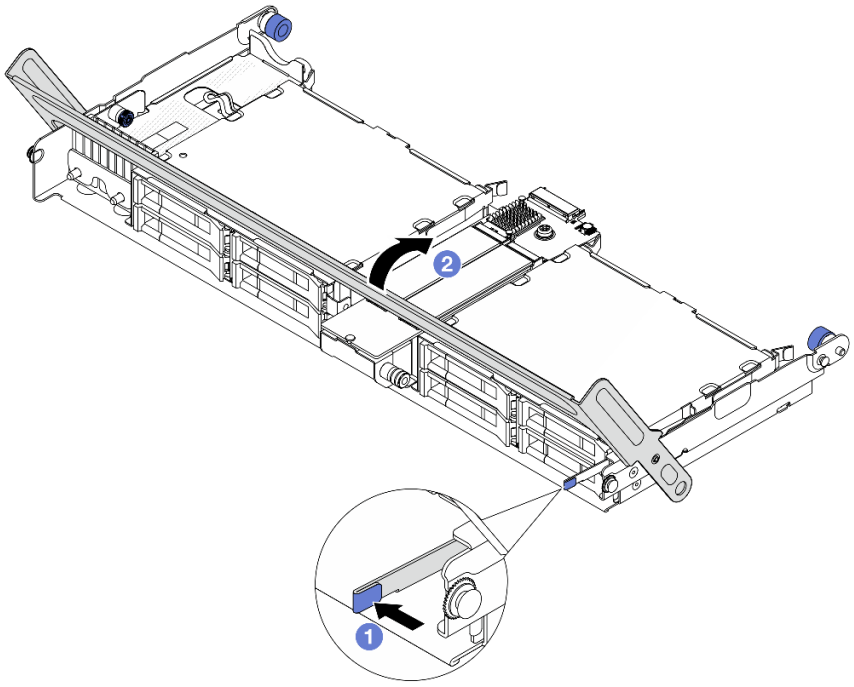

Figure 101. Closing the handle of the middle drive cage

a. 1 Press the latch as shown.
b. 2 Close the handle.

Step 3. Connect the cable to the M.2 backplane and processor board. See ***Internal Cable Routing Guide***.

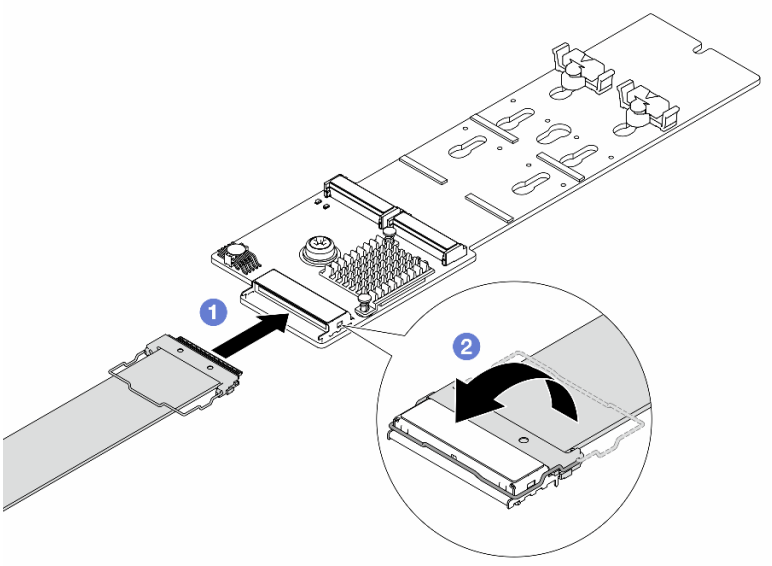

Figure 102. Connecting the M.2 cable

a. Connect the M.2 cable to the M.2 backplane.

b. Rotate the latch on the cable as illustrated, and press the latch down until it clicks into place.

After you finish

Complete the parts replacement. See “Complete the parts replacement” on page 341.

Demo video

Watch the procedure on YouTube

Intrusion switch replacement

Follow the instructions in this section to remove and install the intrusion switch. The intrusion switch informs you that the server cover is not properly installed or closed by creating an event in the system event log (SEL).

- “Remove the intrusion switch” on page 113
- “Install the intrusion switch” on page 115

Remove the intrusion switch

Follow the instructions in this section to remove the intrusion switch.

About this task

Attention:

- Read “Installation Guidelines” on page 1 and “Safety inspection checklist” on page 2 to ensure that you work safely.
- Power off the server and peripheral devices and disconnect the power cords and all external cables. See “Power off the server” on page 27.
- Prevent exposure to static electricity, which might lead to system halt and loss of data, by keeping static-sensitive components in their static-protective packages until installation, and handling these devices with an electrostatic-discharge wrist strap or other grounding system.

Procedure

Step 1. Make preparation for the task.

a. If the server is installed in a rack, slide the server out on its rack slide rails to gain access to the top cover, or remove the server from the rack. See “Server replacement” on page 34.

b. Remove the top cover. See “Remove the top cover” on page 335.

c. Remove the system fans from the fan cage. See “Remove a system fan” on page 329.

d. Remove the fan cage. See “Remove the system fan cage” on page 333.

Step 2. Rotate the fan cage by 90 degrees in the direction as shown.

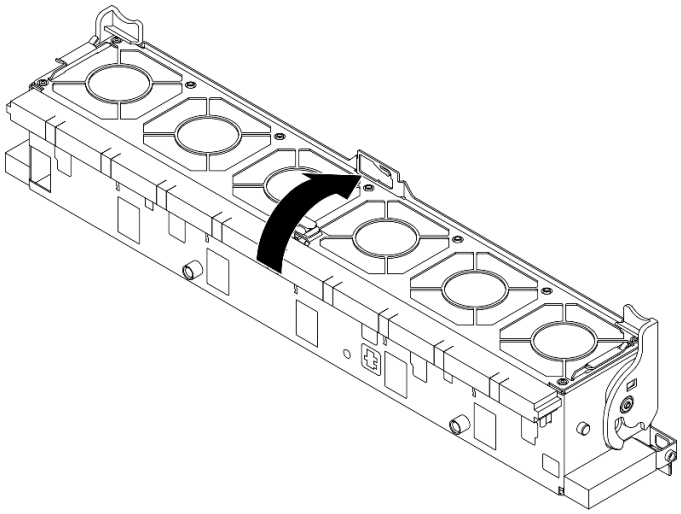

Figure 103. Rotating the fan cage

Step 3. Remove the intrusion switch from the fan cage.

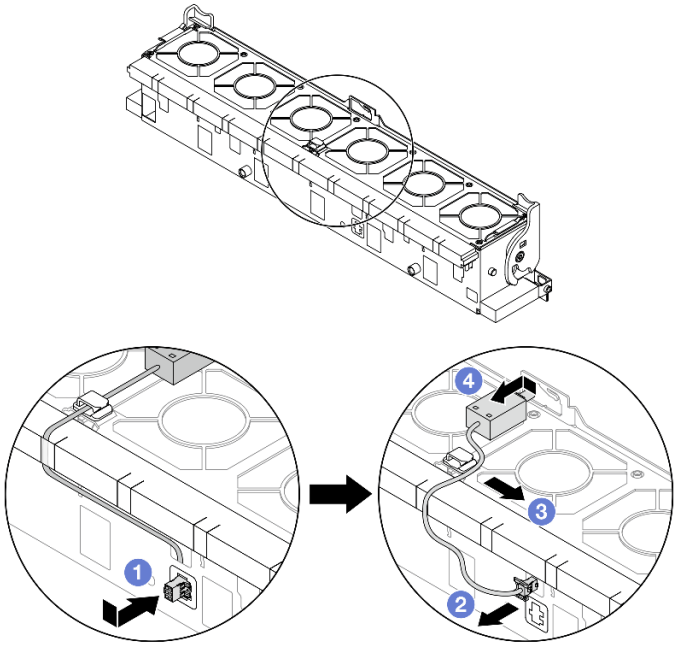

Figure 104. Removing the intrusion switch

a. 1 Move the intrusion switch connector in the direction as shown to disengage it from the keyhole.

b. 2 Release the intrusion switch cable from the pre-cut slots on the foam and fan cage bottom.

c. 3 Release the intrusion switch cable from the cable clip.

d. 4 Slide and pull the intrusion switch to remove it from the holder.

After you finish

1. Install a new intrusion switch. See “Install the intrusion switch” on page 115.
2. If you are instructed to return the component or optional device, follow all packaging instructions, and use any packaging materials for shipping that are supplied to you.

Demo video

Watch the procedure on YouTube

Install the intrusion switch

Follow the instructions in this section to install the intrusion switch.

About this task

Attention:

- Read “Installation Guidelines” on page 1 and “Safety inspection checklist” on page 2 to ensure that you work safely.
- Power off the server and peripheral devices and disconnect the power cords and all external cables. See “Power off the server” on page 27.
- Prevent exposure to static electricity, which might lead to system halt and loss of data, by keeping static-sensitive components in their static-protective packages until installation, and handling these devices with an electrostatic-discharge wrist strap or other grounding system.

Procedure

Step 1. Install the intrusion switch onto the fan cage.

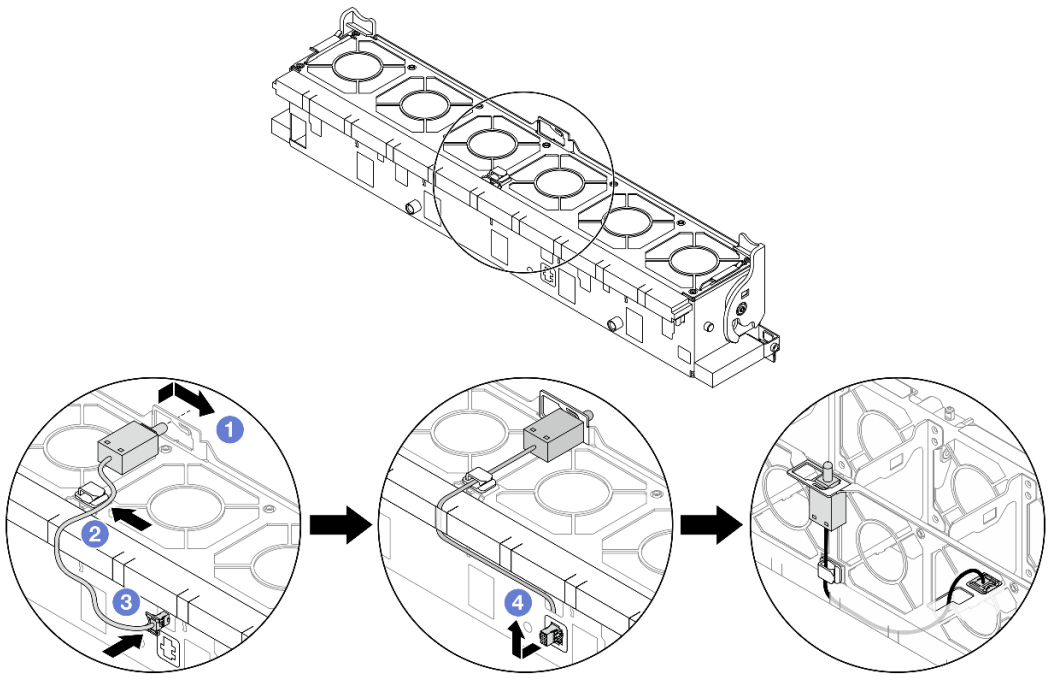

Figure 105. Installing the intrusion switch

a. Insert the intrusion switch into the holder on the fan cage and push it in the direction as shown until it is fully seated.

b. Fix the intrusion switch cable into the cable clip.

c. Route the cable into the fan cage through the pre-cut slots on the foam and fan cage bottom.

d. Insert the intrusion switch connector into the connector keyhole, and move it in the shown direction until it is fully seated.

Note: Ensure that the intrusion switch cable is routed through the cable clip and the pre-cut slots on the foam and fan cage bottom. Otherwise, the cable may slide under the fan cage, the contact surface between the fan cage and the system board assembly may get uneven, and the fan connection may get loose.

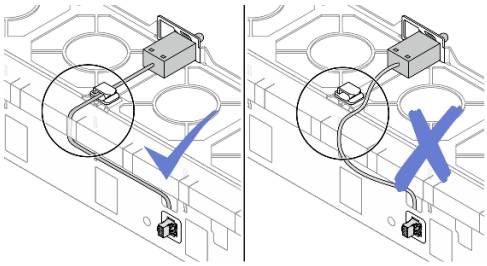

Step 2. Install the system fan cage. See “Install the system fan cage” on page 334.

Step 3. Install system fans. See “Install a system fan” on page 331.

After you finish

Complete the parts replacement. See “Complete the parts replacement” on page 341.

Demo video

Watch the procedure on YouTube

Lenovo Compute Complex Neptune Core Module replacement (trained technicians only)

Follow the instructions in this section to remove and install the Compute Complex Neptune Core Module.

Important:
- This task must be operated by trained technicians that are certified by Lenovo Service. Do not attempt to remove or install the part without proper training and qualification.
- Contact Lenovo Professional Services team for help when installing the part for the first time.
- Configurations with Compute Complex Neptune Core Module do not support rail kits with cable management arm (CMA).

- “Remove the Lenovo Compute Complex Neptune Core Module” on page 116
- “Install the Lenovo Compute Complex Neptune Core Module” on page 121

Remove the Lenovo Compute Complex Neptune Core Module

Follow the instructions in this section to remove the Compute Complex Neptune Core Module.

Important:

- This task must be operated by trained technicians that are certified by Lenovo Service. Do not attempt to remove or install the part without proper training and qualification.
- Contact Lenovo Professional Services team for help when installing the part for the first time.

About this task

Safety information for liquid detection sensor module cable

S011



CAUTION:
Sharp edges, corners, or joints nearby.

Attention:

- Read "Installation Guidelines" on page 1 and "Safety inspection checklist" on page 2 to ensure that you work safely.
- Power off the server and peripheral devices and disconnect the power cords and all external cables. See "Power off the server" on page 27.
- Prevent exposure to static electricity, which might lead to system halt and loss of data, by keeping static-sensitive components in their static-protective packages until installation, and handling these devices with an electrostatic-discharge wrist strap or other grounding system.

Torque screwdriver type list	Screw Type
Torx T30 head screwdriver	Torx T30 screw
#2 Phillips screwdriver	#2 Phillips screw

Procedure

Step 1. Make preparations for this task.

a. Remove the quick connect plugs from the manifolds. See "Remove the manifold (in-rack system)" on page 169 or "Remove the manifold (in-row system)" on page 188.

b. Remove the server from the rack. See "Server replacement" on page 34.

c. Remove the top cover. See "Remove the top cover" on page 335.

d. Remove the air baffle. See "Remove the air baffle" on page 54.

e. Remove the air baffle or middle drive cage. See "Remove the air baffle" on page 54 or "Remove the middle drive cage and drive backplane" on page 219.

f. Remove the rear drive cage assembly if needed. See "Rear drive cage replacement" on page 271.

g. Remove the memory module. See "Remove a memory module" on page 209.

h. Disconnect the leakage detection sensor module cable of the Compute Complex Neptune Core Module from the connector on the system board assembly.

Attention: To avoid damaging the system board assembly, make sure to follow the instructions in ***Internal Cable Routing Guide*** when disconnecting cables from the system board assembly.

Step 2. Remove the 3FH riser cage.

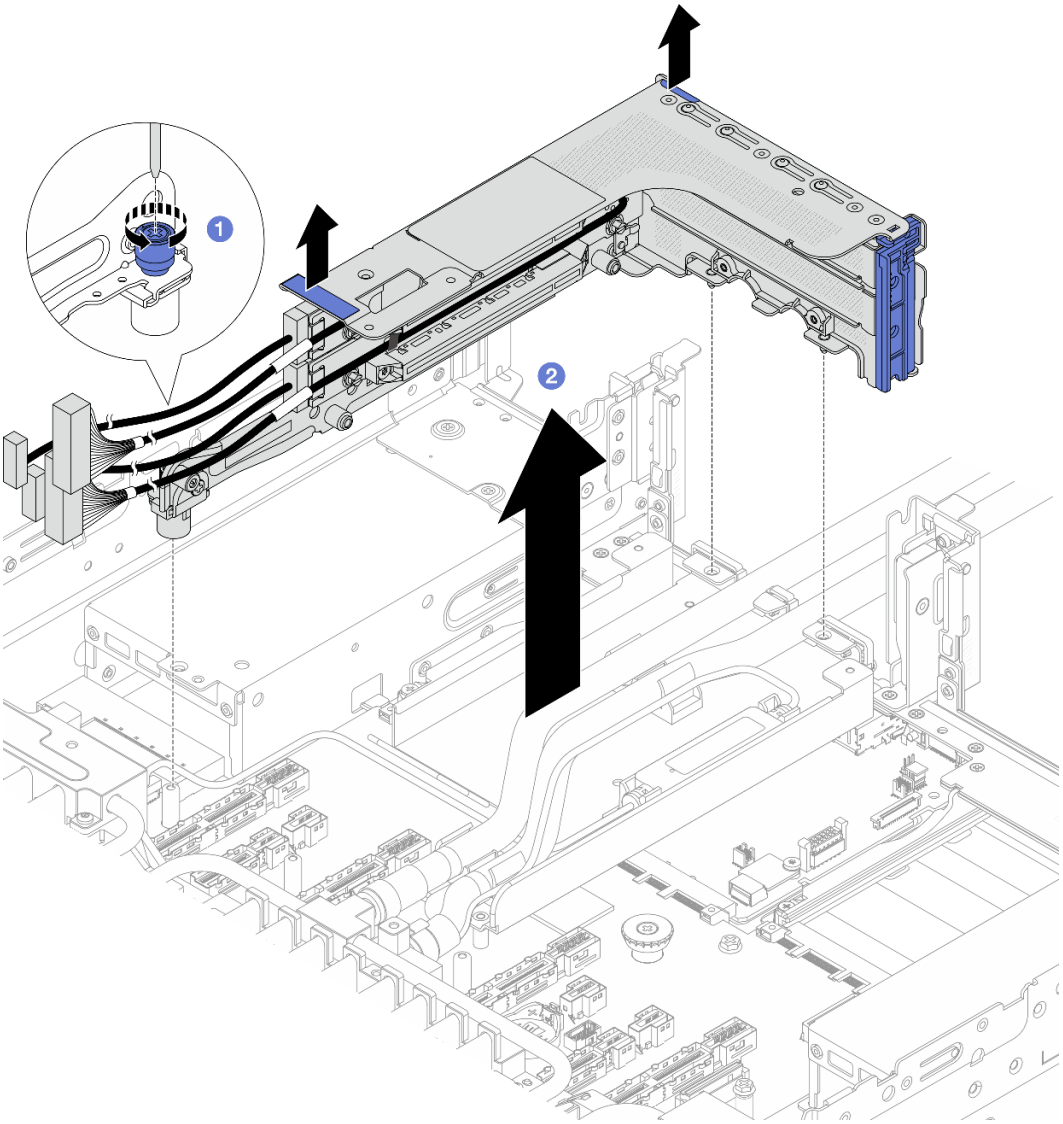

Figure 106. Removing the 3FH riser cage

a. 1 Loosen the screw that secures the riser cage.

b. 2 Grasp the riser cage by its edges and carefully lift it out of the chassis.

Step 3. Disengage the hoses and leakage detection sensor module.

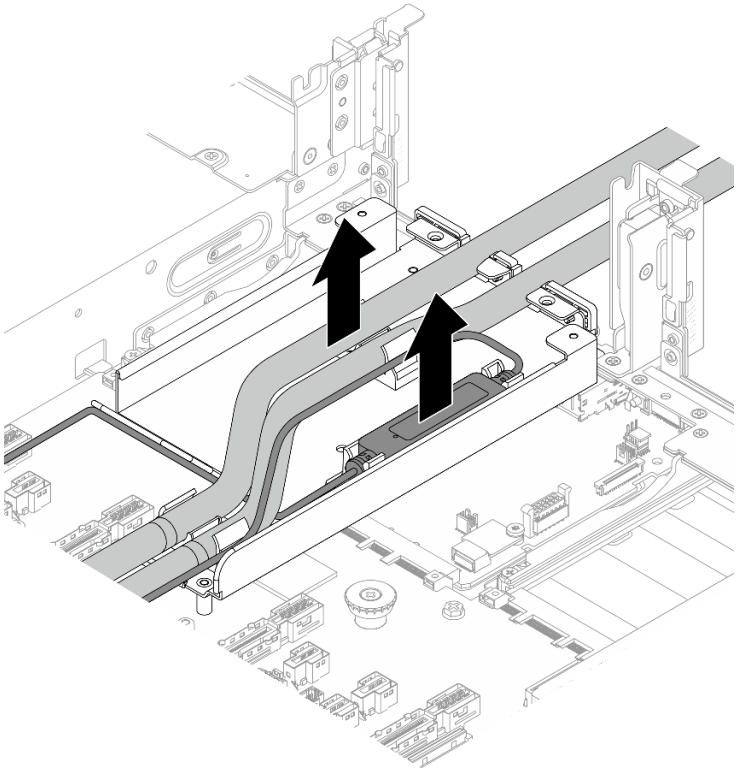

Figure 107. Disengaging the hoses and leakage detection sensor module

Step 4. Loosen the six screws and eight Torx T30 nuts on the Compute Complex Neptune Core Module.

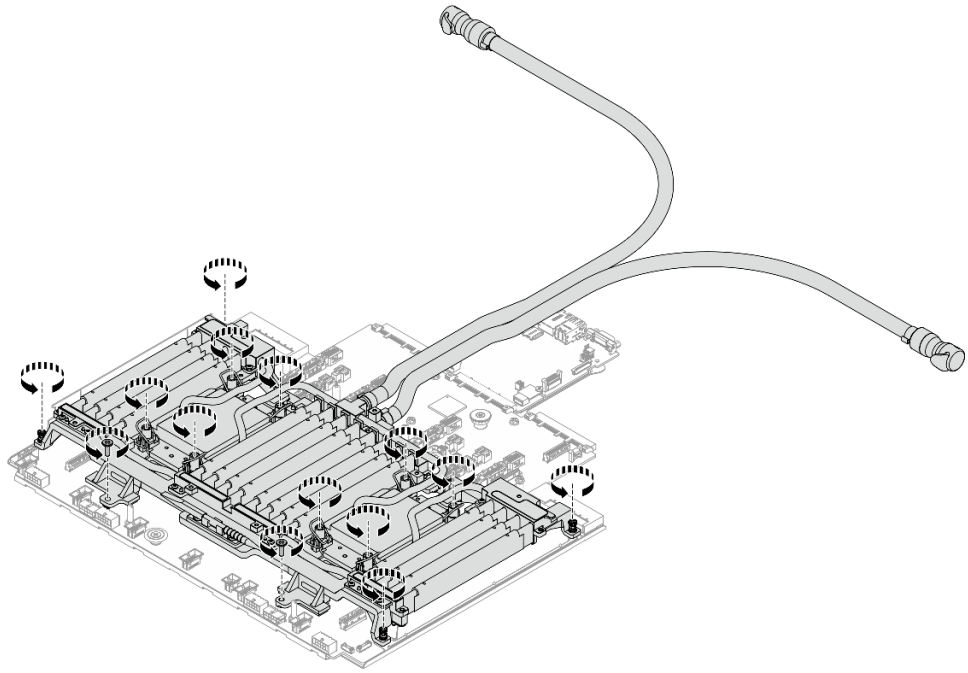

Figure 108. Loosening screws

Step 5. Install the shipping tray on the module.

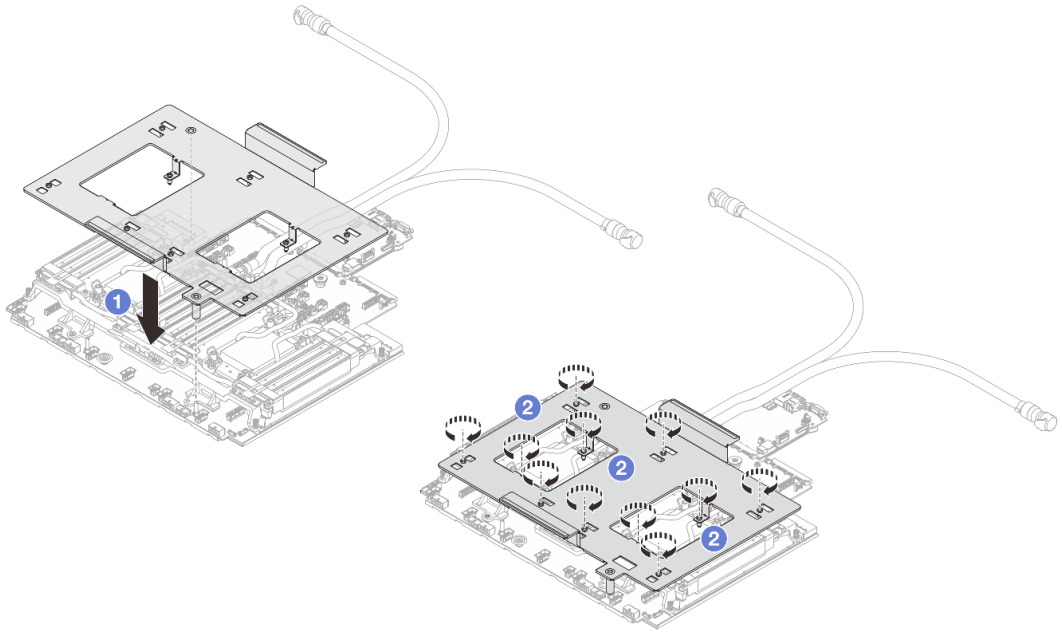

Figure 109. Installing the shipping tray

a. 1 Install the shipping tray on the module.

b. 2 Tighten the screws to lock the shipping tray.

Step 6. Disengage the module from the processor board.

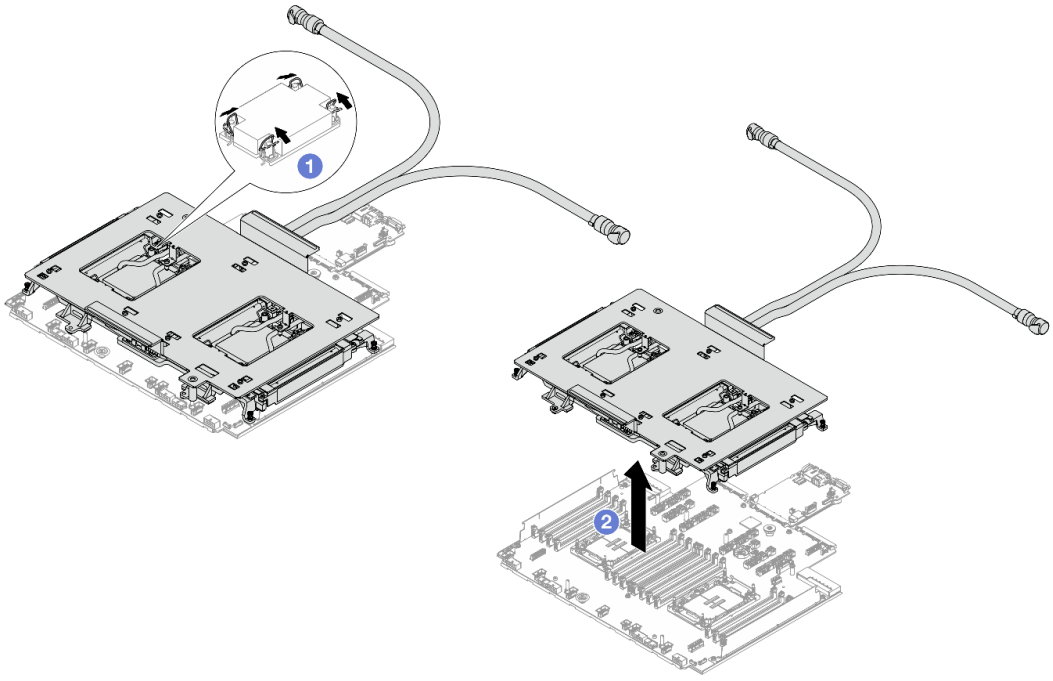

Figure 110. Removing the module

a. 1 Rotate the anti-tilt wire bails inward.

b. (2) Carefully lift the module from the processor sockets. If the module cannot be fully lifted out of the socket, further loosen the Torx T30 nuts and try lifting the module again.

Step 7. Separate the processor from the module. See "Separate the processor from carrier and heat sink" on page 240.

Step 8. If there is any old thermal grease on the processors and the cold plates, gently clean the top of the processors and the cold plates with an alcohol cleaning pad.

Step 9. Remove the hose holder.

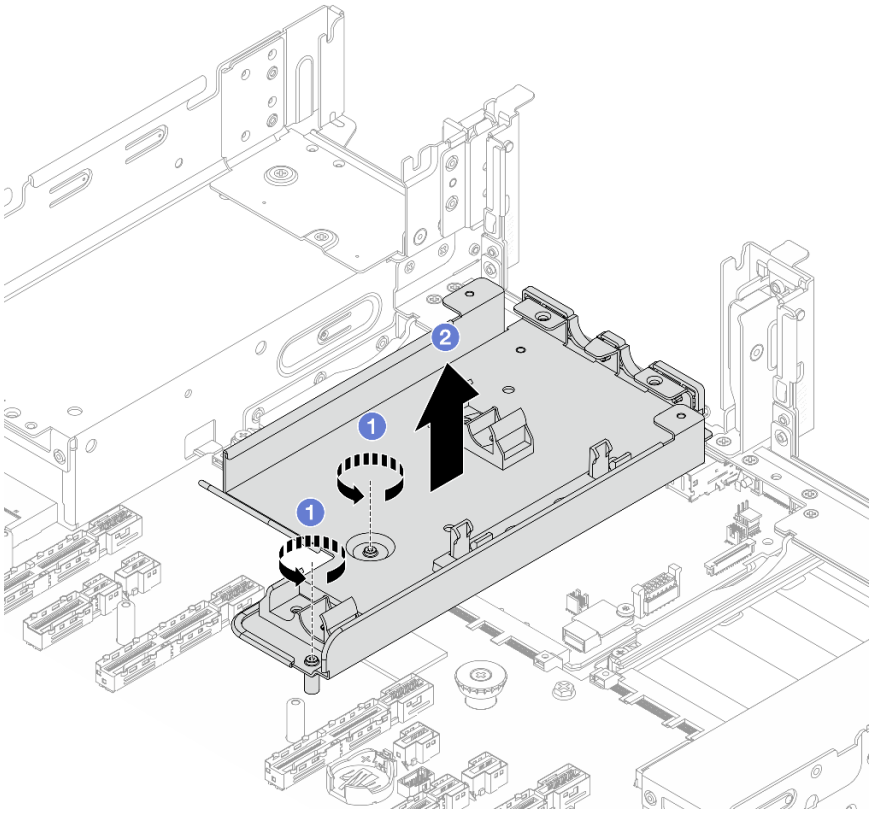

Figure 111. Removing the hose holder

a. (1) Remove the screws that lock the holder to the system board assembly.

b. (2) Lift the hose holder out of the chassis.

After you finish

If you are instructed to return the component or optional device, follow all packaging instructions, and use any packaging materials for shipping that are supplied to you.

Install the Lenovo Compute Complex Neptune Core Module

Follow the instructions in this section to install the Compute Complex Neptune Core Module.

Important:

- This task must be operated by trained technicians that are certified by Lenovo Service. Do not attempt to remove or install the part without proper training and qualification.
- Contact Lenovo Professional Services team for help when installing the part for the first time.

About this task

S011



CAUTION:
Sharp edges, corners, or joints nearby.

Attention:

- Read “Installation Guidelines” on page 1 and “Safety inspection checklist” on page 2 to ensure that you work safely.
- Power off the server and peripheral devices and disconnect the power cords and all external cables. See “Power off the server” on page 27.
- Prevent exposure to static electricity, which might lead to system halt and loss of data, by keeping static-sensitive components in their static-protective packages until installation, and handling these devices with an electrostatic-discharge wrist strap or other grounding system.

CAUTION:
When removing a new Compute Complex Neptune Core Module from the shipping box, lift out the cold plate assembly with the shipping tray attached to prevent thermal grease on the cold plate assembly from damage.

Torque screwdriver type list	Screw Type
Torx T30 head screwdriver	Torx T30 screw
#2 Phillips screwdriver	#2 Phillips screw

Procedure

Step 1. Install the hose holder to the chassis.

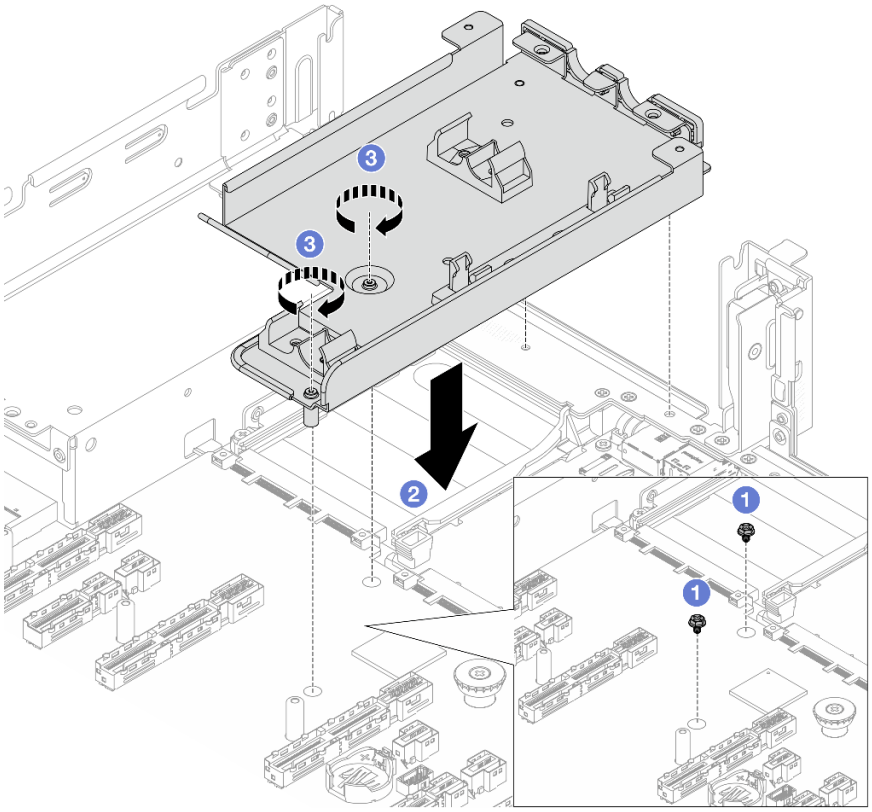

Figure 112. Installing the hose holder

a. 1 Remove the screws on the system board assembly if needed.

b. 2 Align the screw holes in the hose holder with the screw holes on the system board assembly and the guiding pins on the holder with the holes on the rear wall.

c. 3 Install the screws to secure the hose holder to the system board assembly.

Step 2. (Optional) To install a new module on the current processor, make sure you have an alcohol cleaning pad available.

Attention: If there is any old thermal grease on the processors, gently clean the top of the processors with an alcohol cleaning pad.

Step 3. Install the processor to the Compute Complex Neptune Core Module. For more information, see "Install a processor and heat sink" on page 242.

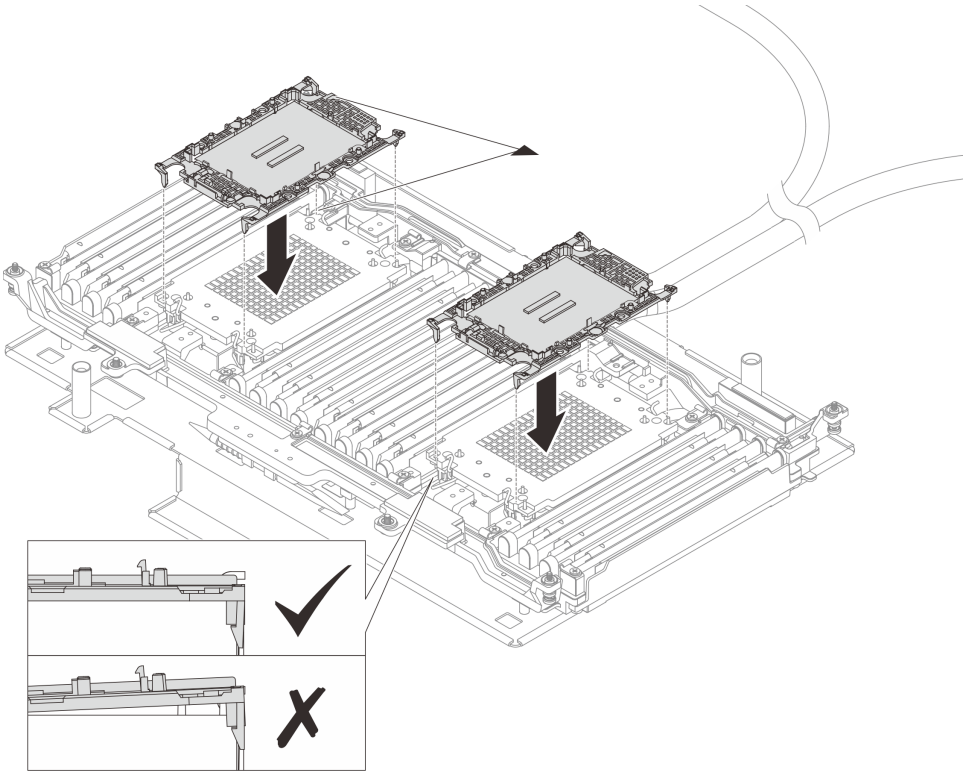

Figure 113. Installing the processor

1. Align the triangular mark on the cold plate assembly label with the triangular mark on the processor carrier and processor.
2. Install the processor-carrier onto the module.
3. Press the carrier into place until the clips at all four corners engage.

Step 4. (Optional) To install a new module, peel off the release paper of thermal pads.

Note: If the thermal pads are stained, damaged or lost, apply for the new thermal pad FRUs.

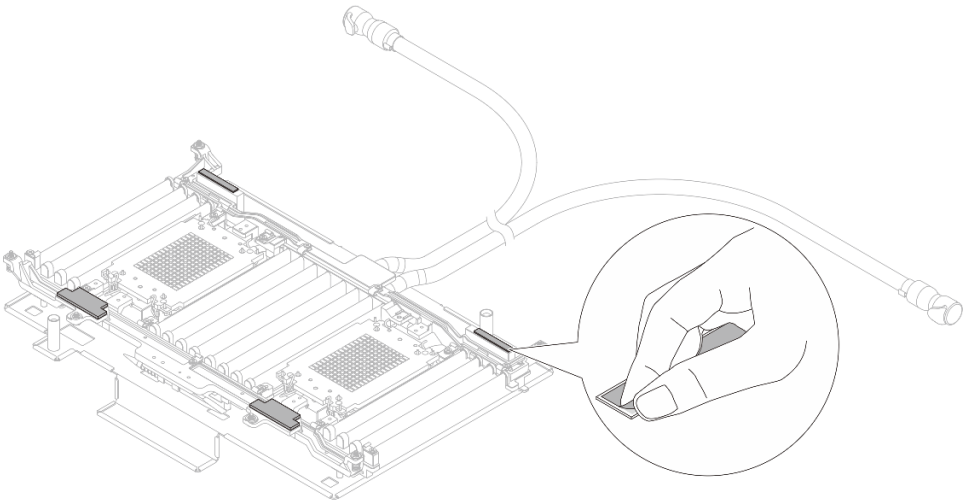

Figure 114. Peeling off the release paper

Step 5. Install the processor-module to the system board assembly.

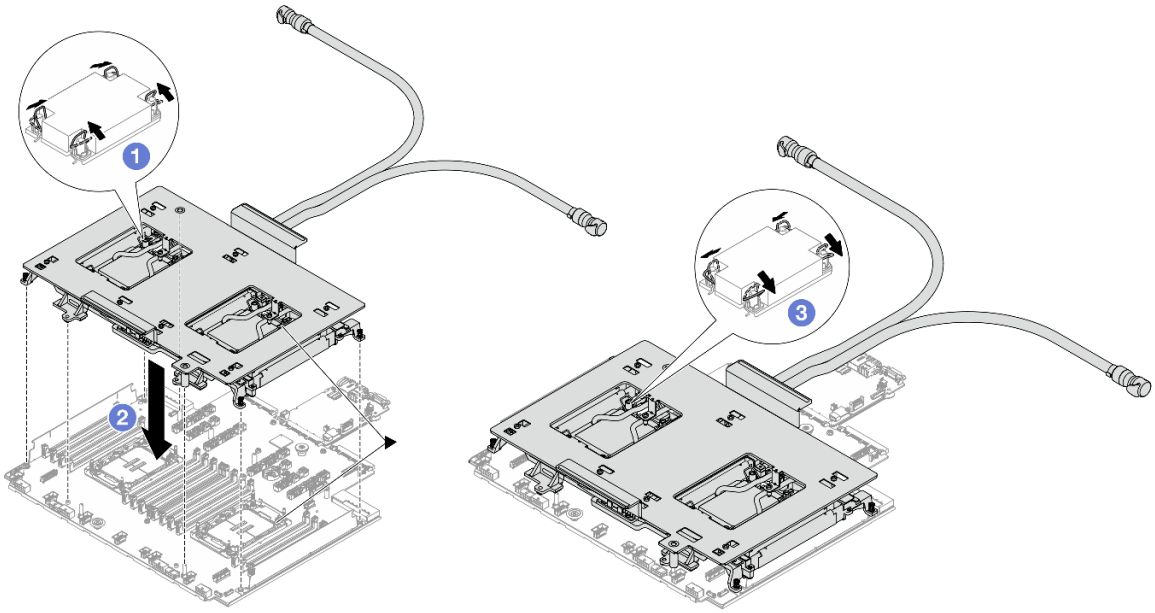

Figure 115. Installing the module

1. 1 Rotate the anti-tilt wire bails inward.
2. 2 Align the triangular mark and four Torx T30 nuts on the cold plate assembly with the triangular mark and threaded posts of the processor socket; then, insert the cold plate assembly into the processor socket.
3. 3 Rotate the anti-tilt wire bails outward until they engage with the hooks in the socket.

Step 6. Remove the shipping tray from the module.

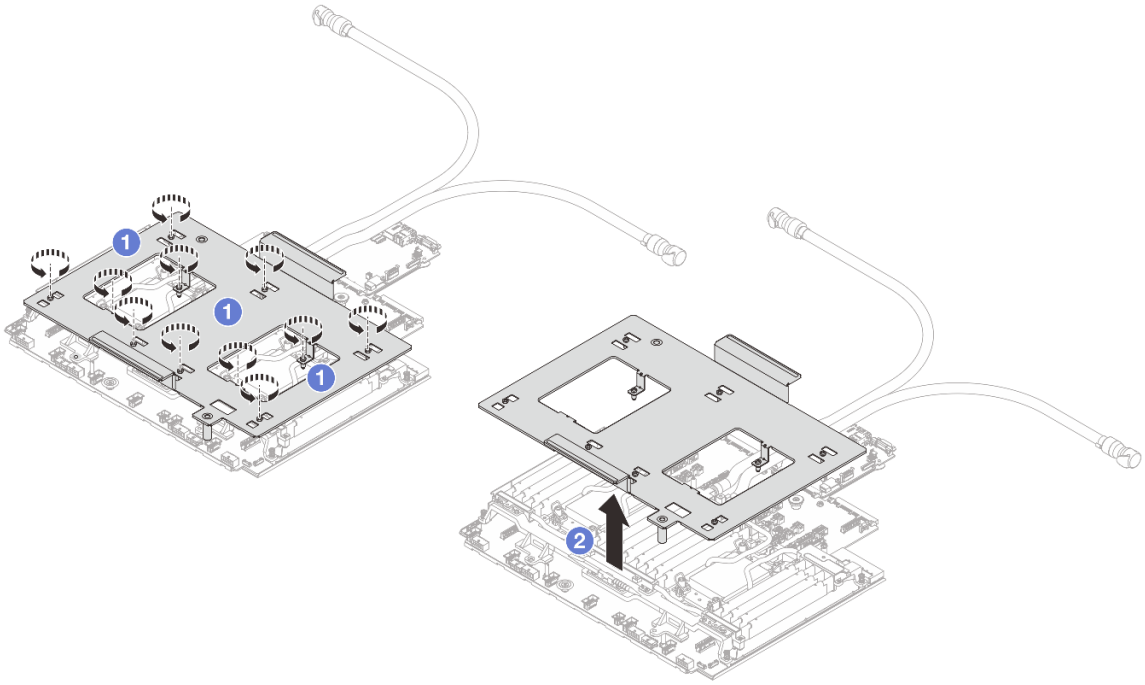

Figure 116. Removing the shipping tray

a. 1 Loosen the screws that secure the shipping tray.

b. 2 Separate the shipping tray from the module.

Step 7. Tighten the six screws and eight Torx T30 nuts on the module.

Note: Users should tighten the Torx T30 nuts *in the installation sequence shown* on the cold plate assembly. Tighten the screws until they stop; then, visually inspect to make sure that there is no gap between the screw shoulder beneath the cold plate assembly and the processor socket. (For reference, the torque required for the fasteners to fully tighten is 0.9-1.3 newton-meters, 8-12 inch-pounds.)

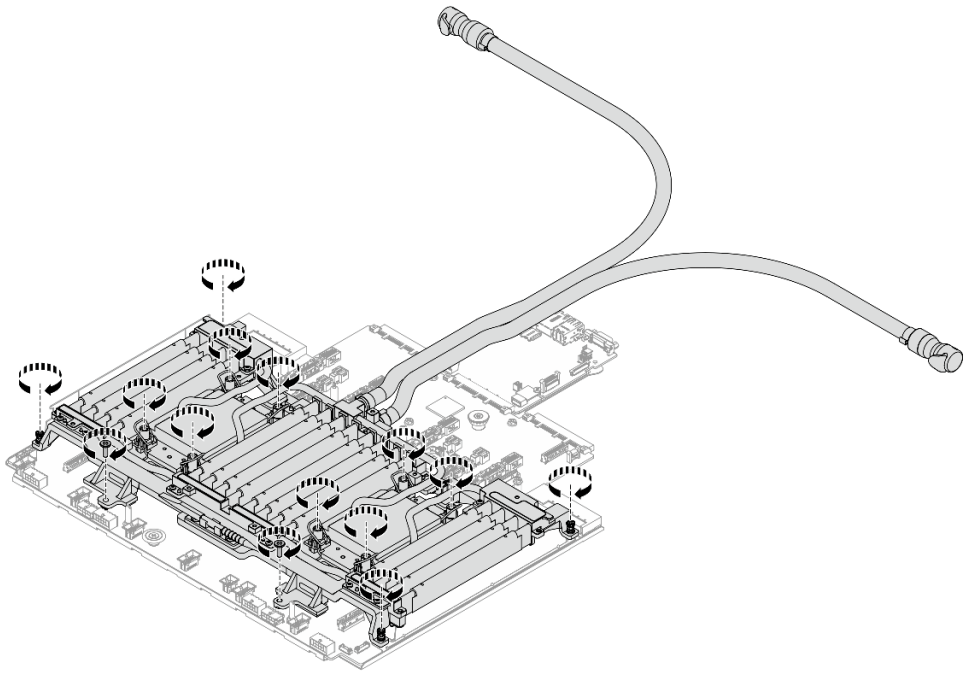

Figure 117. Tightening screws

Step 8. Place the hoses and the leakage detection sensor module on the hose holder.

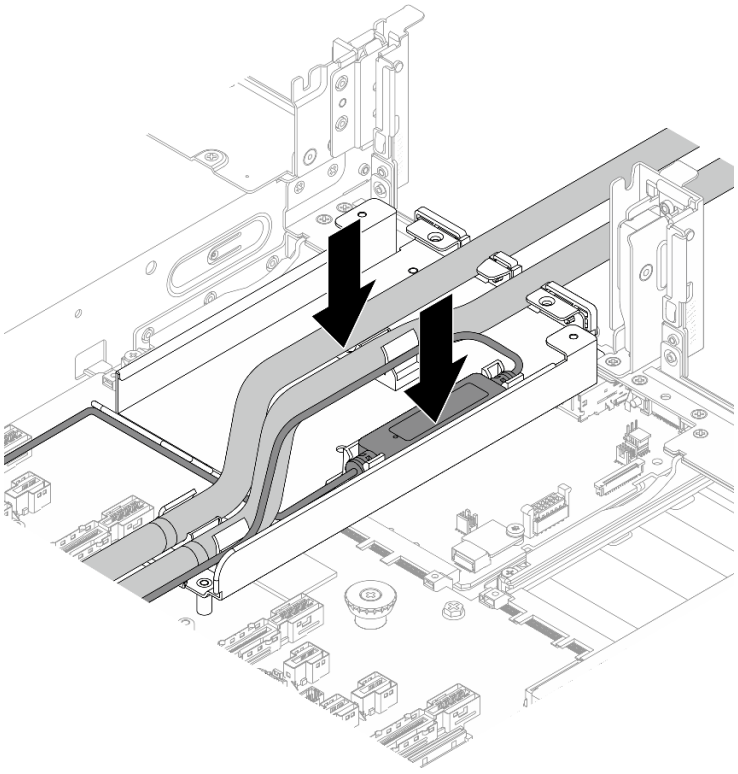

Figure 118. Placing the hoses and leakage detection sensor module

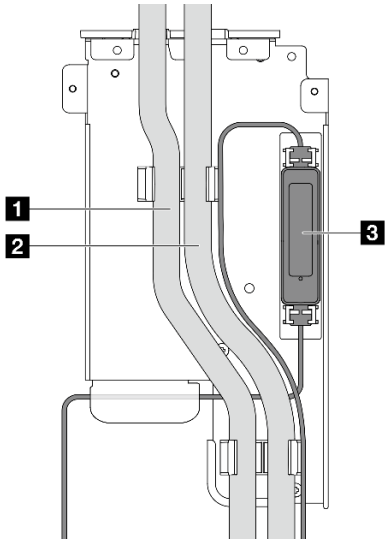

1 Outlet hose

2 Inlet hose

3 Leakage detection sensor module

Note:
For leakage detection sensor module working status, see “LED on the leakage detection sensor module” in *User Guide* or *System Configuration Guide*.

Figure 119. Installation details

Step 9. Connect the cable of the leakage detection sensor module to the connector on the system board assembly. See ***Internal Cable Routing Guide***.

Step 10. Install the 3FH riser cage.

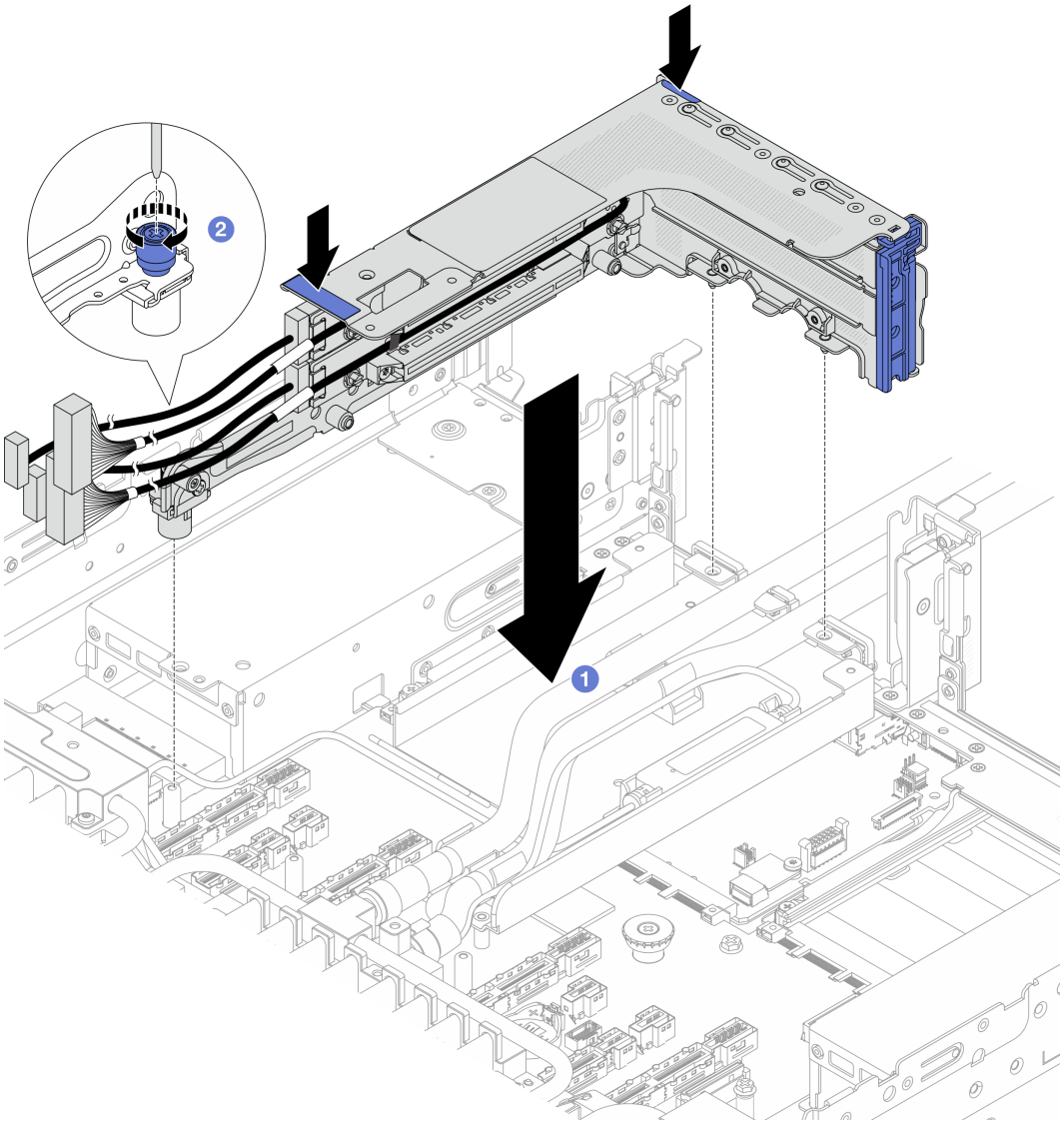

Figure 120. Installing the 3FH riser cage

a. 1 Lower the riser cage into the chassis.

b. 2 Tighten the screw to secure the riser cage.

Step 11. Install the rear drive cage assembly if needed. See “Rear drive cage replacement” on page 271.

Step 12. Install the air baffle or middle drive cage. See “Install the air baffle” on page 56 or “Install the middle drive backplane and drive cage” on page 221.

Step 13. Install the top cover. See “Install the top cover” on page 337.

Step 14. Install the server into the rack. See “Server replacement” on page 34.

Step 15. Install the quick connect plugs to the manifolds. See “Install the manifold (in-rack system)” on page 176 or “Install the manifold (in-row system)” on page 197.

After you finish

Complete the parts replacement. See “Complete the parts replacement” on page 341.

Lenovo Processor Neptune Core Module replacement (trained technicians only)

Follow the instructions in this section to remove and install the Processor Neptune Core Module.

Important:
- This task must be operated by trained technicians that are certified by Lenovo Service. Do not attempt to remove or install the part without proper training and qualification.
- Contact Lenovo Professional Services team for help when installing the part for the first time.
- Configurations with Processor Neptune Core Module do not support rail kits with cable management arm (CMA).

- "Remove the Lenovo Processor Neptune Core Module" on page 130
- "Install the Lenovo Processor Neptune Core Module" on page 134

Remove the Lenovo Processor Neptune Core Module

Follow the instructions in this section to remove the Processor Neptune Core Module.

Important:
- This task must be operated by trained technicians that are certified by Lenovo Service. Do not attempt to remove or install the part without proper training and qualification.
- Contact Lenovo Professional Services team for help when installing the part for the first time.

About this task

Safety information for liquid detection sensor module cable

S011



CAUTION:
Sharp edges, corners, or joints nearby.

Attention:

- Read "Installation Guidelines" on page 1 and "Safety inspection checklist" on page 2 to ensure that you work safely.
- Power off the server and peripheral devices and disconnect the power cords and all external cables. See "Power off the server" on page 27.
- Prevent exposure to static electricity, which might lead to system halt and loss of data, by keeping static-sensitive components in their static-protective packages until installation, and handling these devices with an electrostatic-discharge wrist strap or other grounding system.

Torque screwdriver type list	Screw Type
Torx T30 head screwdriver	Torx T30 screw

Procedure

Step 1. Make preparations for this task.

a. Remove the quick connect plugs from the manifolds. See “Remove the manifold (in-rack system)” on page 169 or “Remove the manifold (in-row system)” on page 188.

b. Remove the server from the rack. See “Server replacement” on page 34.

c. Remove the top cover. See “Remove the top cover” on page 335.

d. Remove the air baffle or middle drive cage. See “Remove the air baffle” on page 54 or “Remove the middle drive cage and drive backplane” on page 219.

e. Remove the rear drive cage assembly if needed. See “Rear drive cage replacement” on page 271.

f. Disconnect the leakage detection sensor module cable of the Processor Neptune Core Module from the connector on the system board assembly.

Attention: To avoid damaging the system board assembly, make sure to follow the instructions in ***Internal Cable Routing Guide*** when disconnecting cables from the system board assembly.

Step 2. Remove the 1FH bracket or 3FH riser cage.

- **1FH bracket**

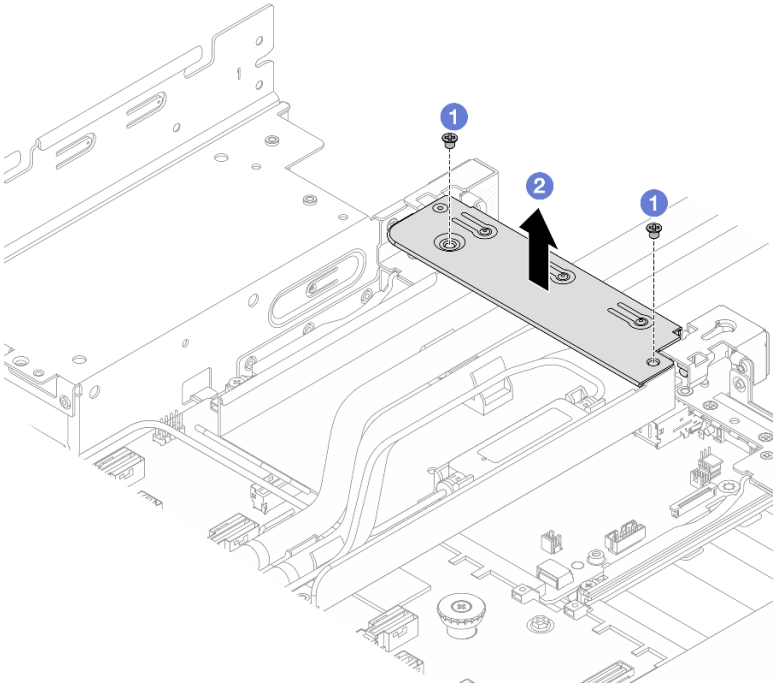

Figure 121. Removing the 1FH bracket

1. 1 Remove the screws that secure the bracket.
2. 2 Lift the bracket out of the chassis.

- **3FH riser cage**

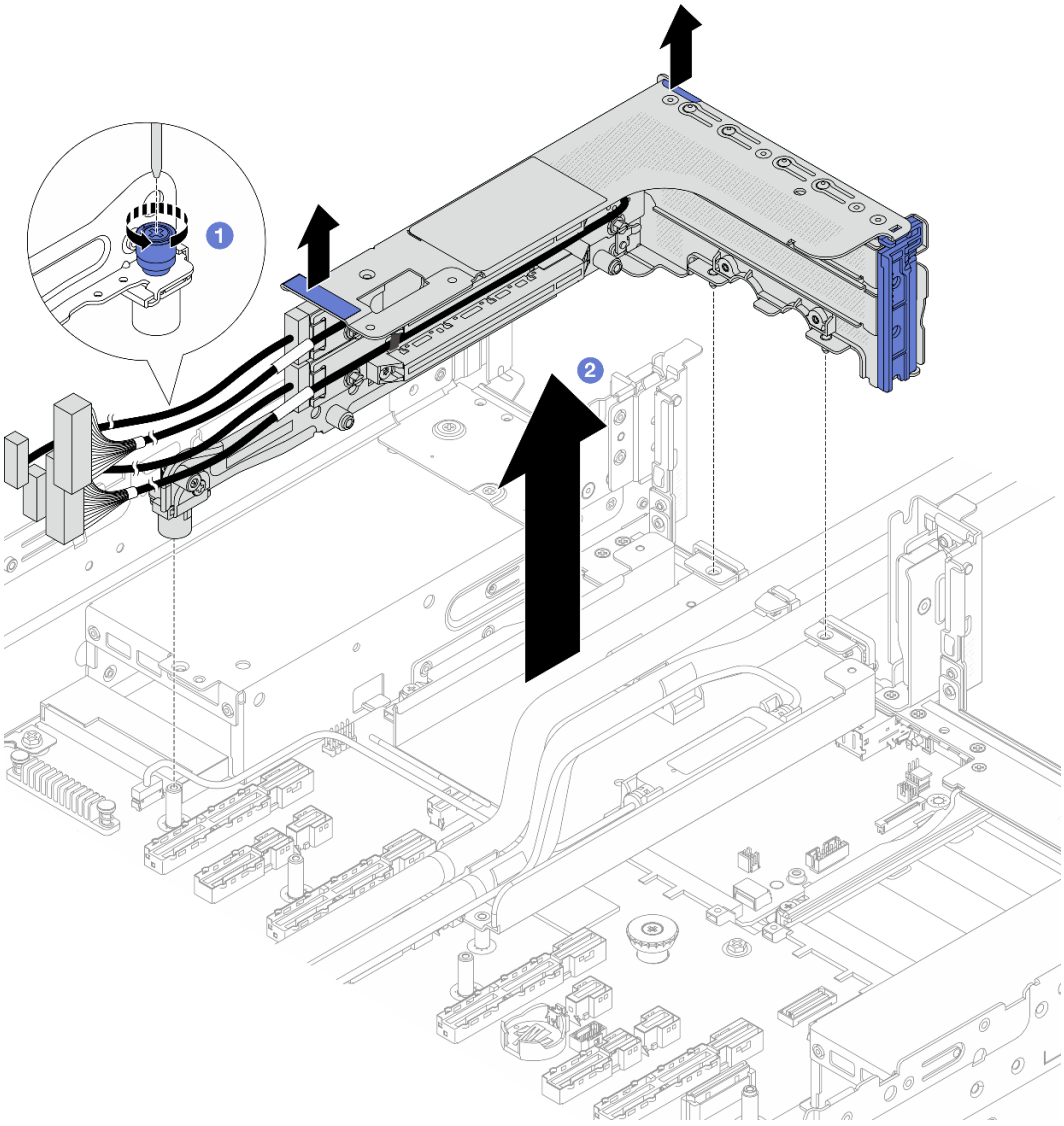

Figure 122. Removing the 3FH riser cage

1. 1 Loosen the screw that secures the riser cage.
2. 2 Grasp the riser cage by its edges and carefully lift it out of the chassis.

Step 3. Disengage the hoses and leakage detection sensor module from the holder.

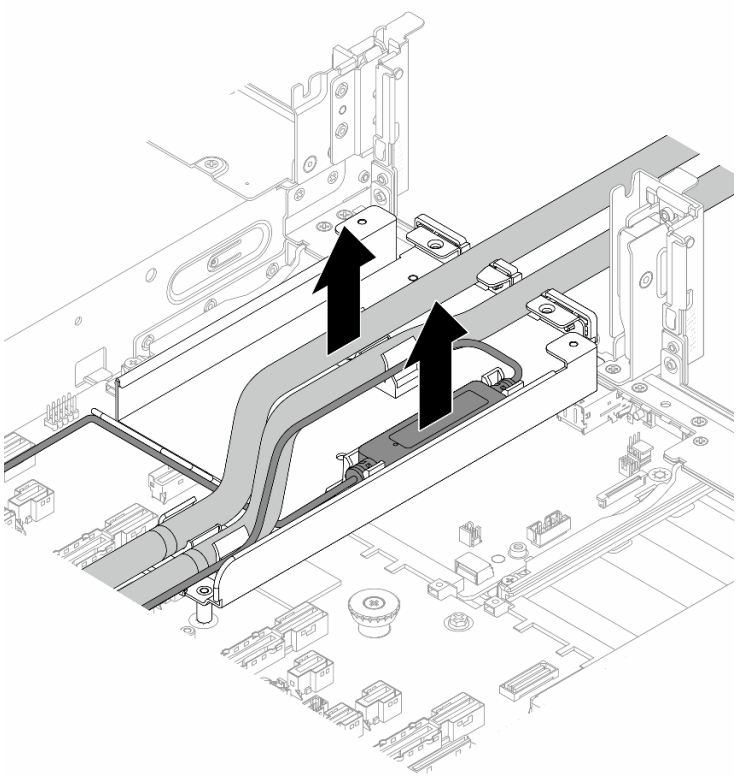

Figure 123. Disengaging the hoses and leakage detection sensor module

Step 4. Remove the Processor Neptune Core Module from the processor board.

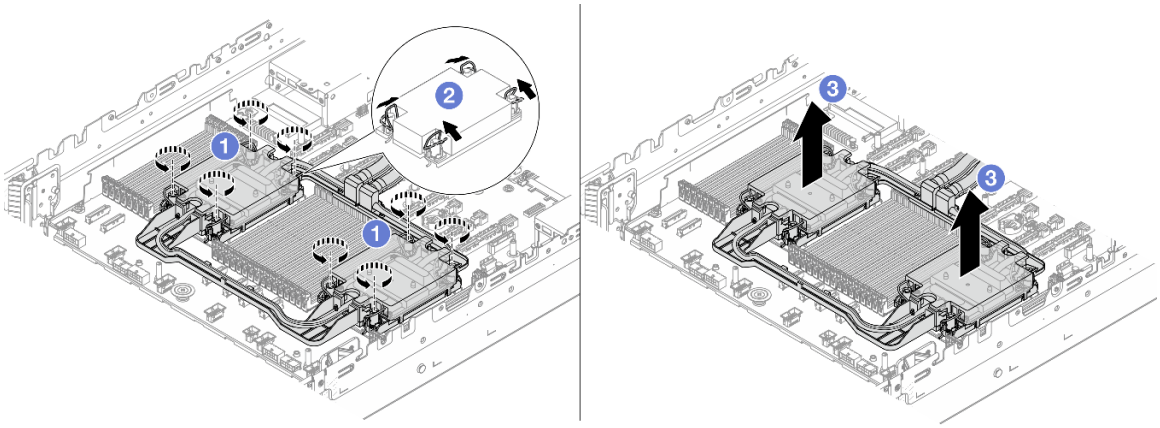

Figure 124. Removing the Processor Neptune Core Module

a. 1 Fully loosen the Torx T30 nuts on the cold plate assembly.

b. 2 Rotate the anti-tilt wire bails inward.

c. 3 Carefully lift the module from the processor sockets. If the module cannot be fully lifted out of the socket, further loosen the Torx T30 nuts and try lifting the module again.

Step 5. Separate the processor from the Processor Neptune Core Module. See "Separate the processor from carrier and heat sink" on page 240.

Step 6. If there is any old thermal grease on the processors and the cold plates, gently clean the top of the processors and the cold plates with an alcohol cleaning pad.

Step 7. Remove the hose holder.

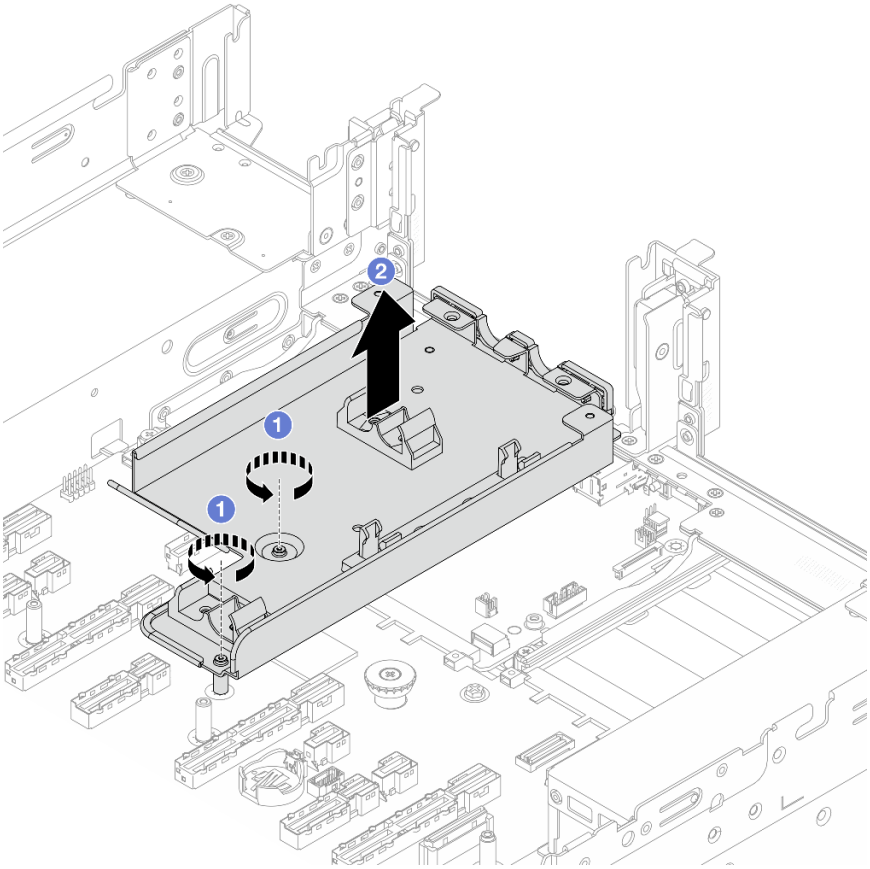

Figure 125. Removing the hose holder

a. 1 Remove the screws that lock the holder to the system board assembly.

b. 2 Lift the hose holder out of the chassis.

After you finish

If you are instructed to return the component or optional device, follow all packaging instructions, and use any packaging materials for shipping that are supplied to you.

Install the Lenovo Processor Neptune Core Module

Follow the instructions in this section to install the Processor Neptune Core Module.

Important:
- This task must be operated by trained technicians that are certified by Lenovo Service. Do not attempt to remove or install the part without proper training and qualification.
- Contact Lenovo Professional Services team for help when installing the part for the first time.

About this task

S011



CAUTION:
Sharp edges, corners, or joints nearby.

Attention:

- Read “Installation Guidelines” on page 1 and “Safety inspection checklist” on page 2 to ensure that you work safely.
- Power off the server and peripheral devices and disconnect the power cords and all external cables. See “Power off the server” on page 27.
- Prevent exposure to static electricity, which might lead to system halt and loss of data, by keeping static-sensitive components in their static-protective packages until installation, and handling these devices with an electrostatic-discharge wrist strap or other grounding system.

CAUTION:
When removing a new Processor Neptune Core Module from the shipping box, lift out the cold plate assembly with the shipping tray attached to prevent thermal grease on the cold plate assembly from damage.

Torque screwdriver type list	Screw Type
Torx T30 head screwdriver	Torx T30 screw

Procedure

Step 1. Install the hose holder to the chassis.

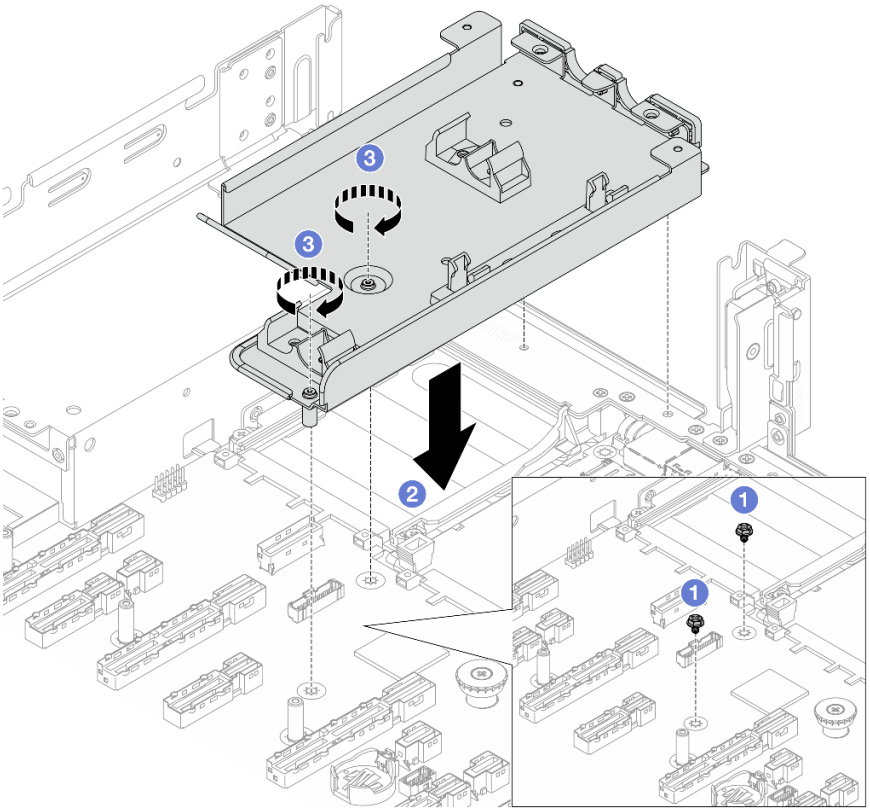

Figure 126. Installing the hose holder

a. 1 Remove the screws on the system board assembly if needed.

b. 2 Align the screw holes in the hose holder with the screw holes on the system board assembly and the guiding pins on the holder with the holes on the rear wall.

c. 3 Install the screws to secure the hose holder to the system board assembly.

Step 2. Install the processor to the Processor Neptune Core Module. For more information, see “Install a processor and heat sink” on page 242.

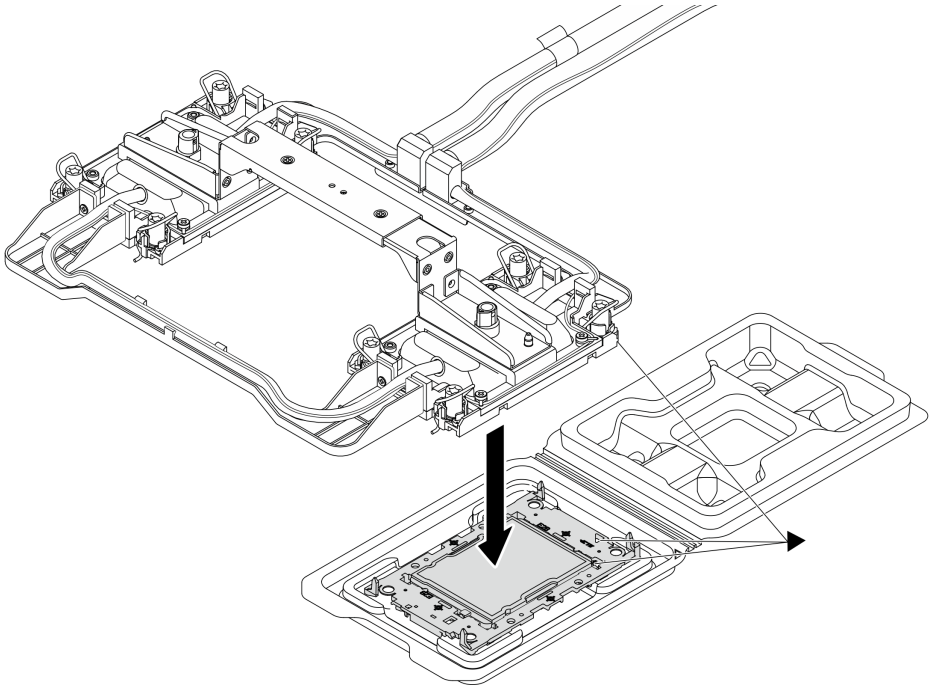

Figure 127. Installing the processor

a. Align the triangular mark on the cold plate assembly label with the triangular mark on the processor carrier and processor.

b. Install the Processor Neptune Core Module onto the processor-carrier.

c. Press the carrier into place until the clips at all four corners engage.

Note: If the server has only one processor installed, generally processor 1, it is required to install a cover to the empty socket of processor 2 before proceeding with further installation.

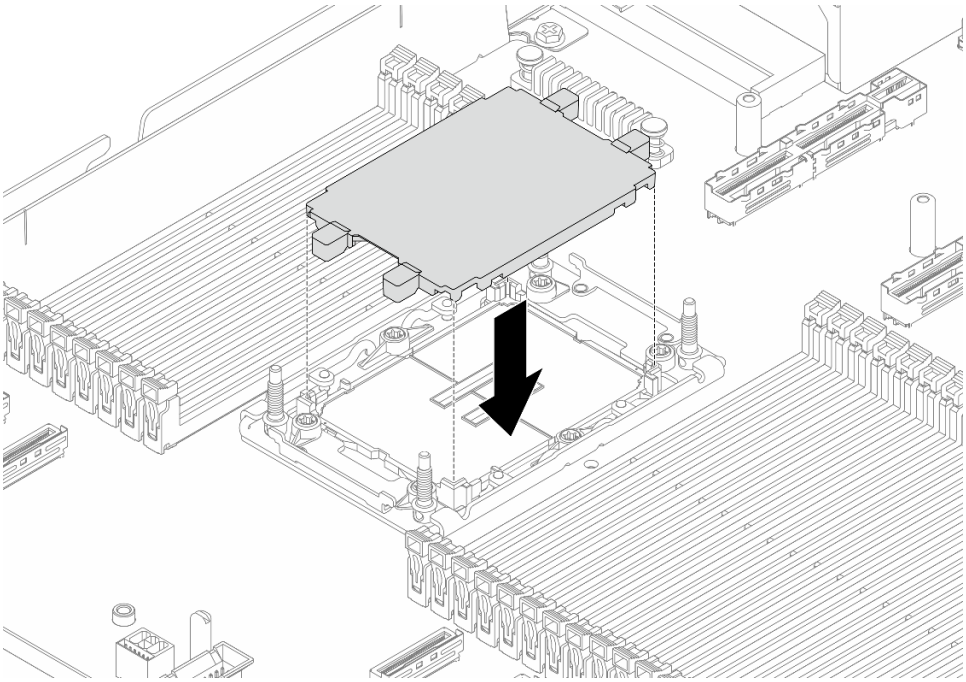

Figure 128. Installing the processor socket cover

Step 3. Install the Processor Neptune Core Module to the system board assembly.

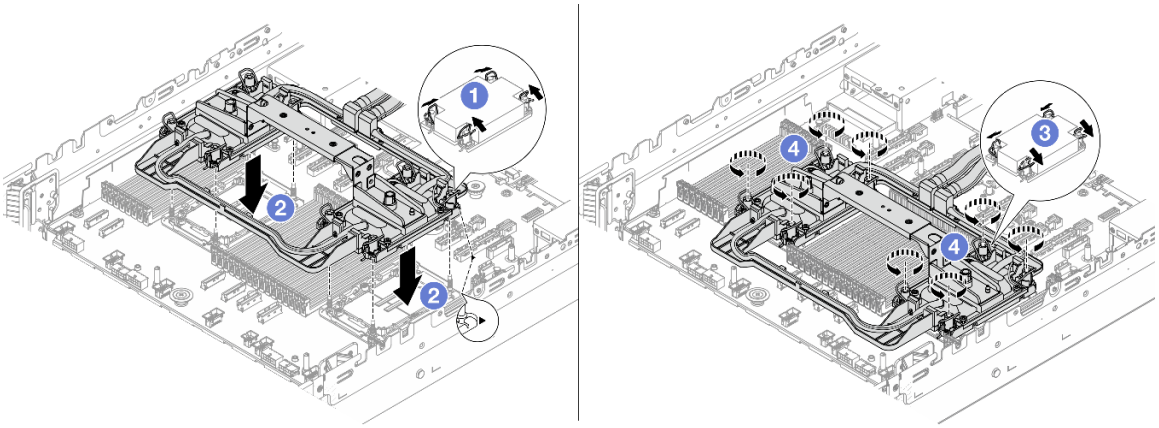

Figure 129. Installing the Processor Neptune Core Module

1. 1 Rotate the anti-tilt wire bails inward.
2. 2 Align the triangular mark and four Torx T30 nuts on the cold plate assembly with the triangular mark and threaded posts of the processor socket; then, insert the cold plate assembly into the processor socket.
3. 3 Rotate the anti-tilt wire bails outward until they engage with the hooks in the socket.
4. 4 Fully tighten the nuts ***in the installation sequence shown*** on the cold plate assembly. Tighten the nuts until they stop; then, visually inspect to make sure that there is no gap between the nut shoulder beneath the cold plate assembly and the processor socket. (For reference, the torque required to fully tighten the nuts is 10 +/– 2.0 lbf-in, 1.1 +/– 0.2 N-m.)

Step 4. Remove the handle from the Processor Neptune Core Module.

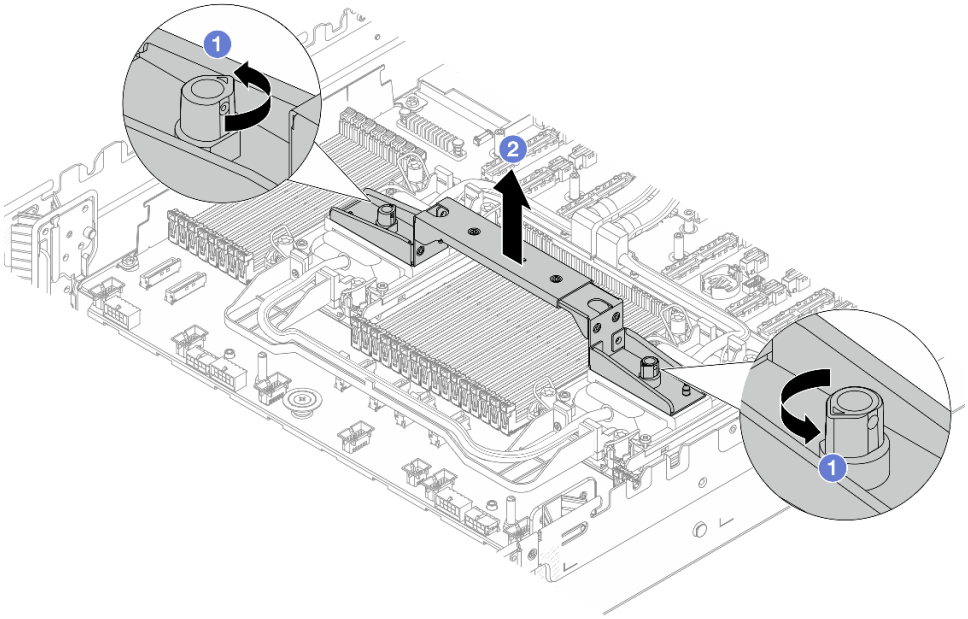

Figure 130. Removing the module handle

a. 1 Rotate the screws as illustrated above to unlock the handle.

b. 2 Separate the handle from the module.

Notes: A new Processor Neptune Core Module comes with a handle.

- To replace an old module with a new one, remove the handle of the new one as illustrated above.
- To replace processors without changing the module, a handle is not needed. Skip Step 4 on page 138 and proceed with further installation.

Step 5. Install the cold plate covers. Press the covers down as illustrated below.

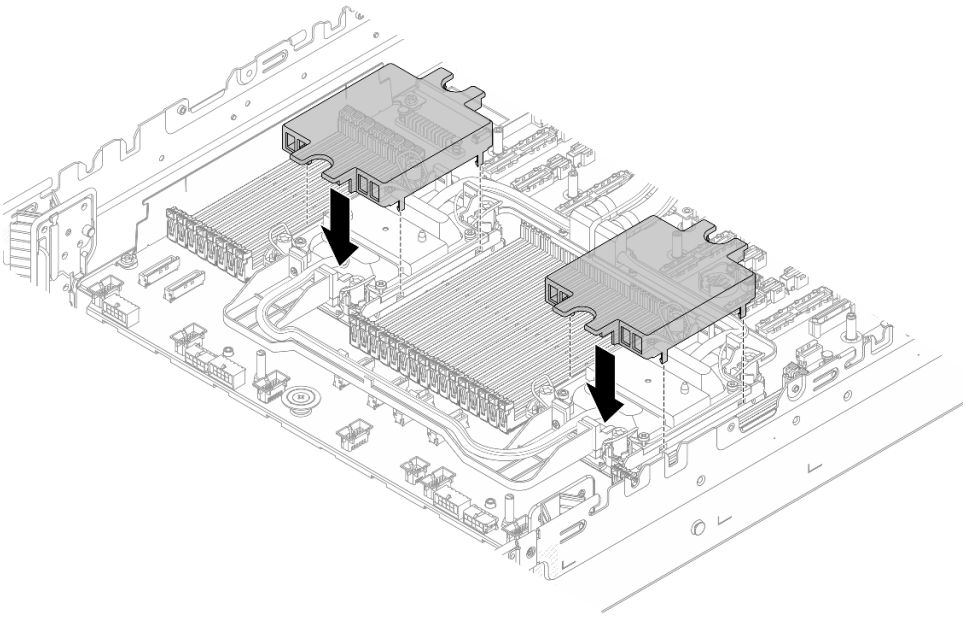

Figure 131. Installing cold plate covers

Step 6. Place the hoses and the leakage detection sensor module on the hose holder.

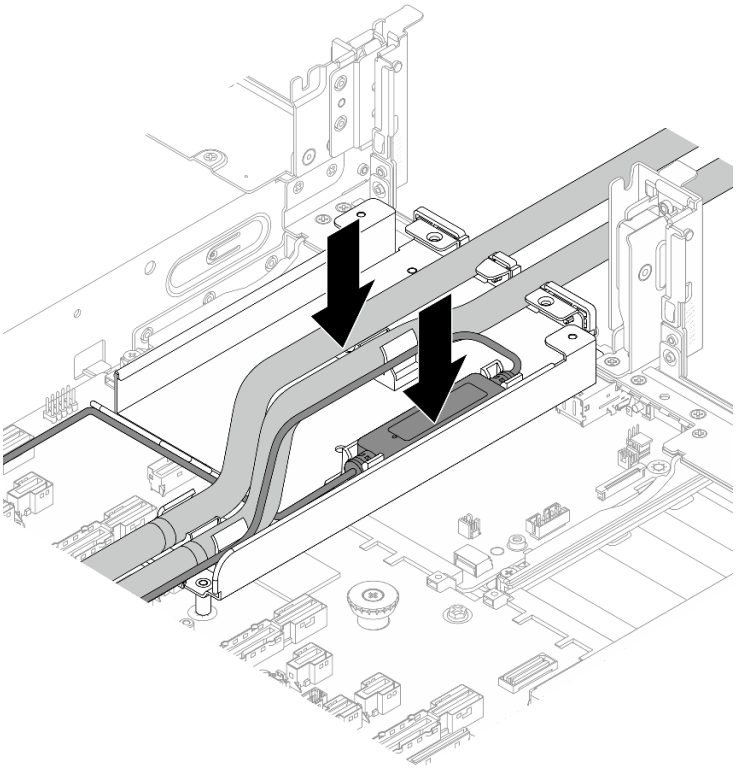

Figure 132. Placing the hoses and leakage detection sensor module

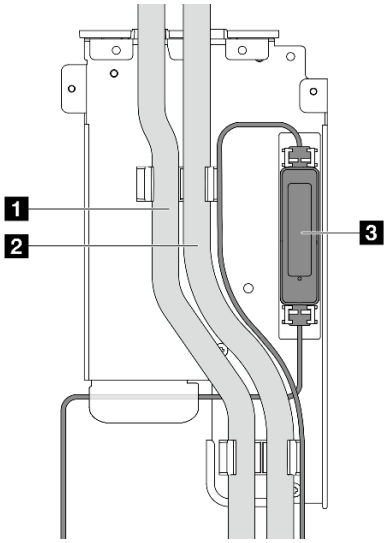

1 Outlet hose

2 Inlet hose

3 Leakage detection sensor module

Note:
For leakage detection sensor module working status, see “LED on the leakage detection sensor module” in *User Guide* or *System Configuration Guide*.

Figure 133. Installation details

Step 7. Install the 1FH bracket or 3FH riser cage.

- **1FH bracket**

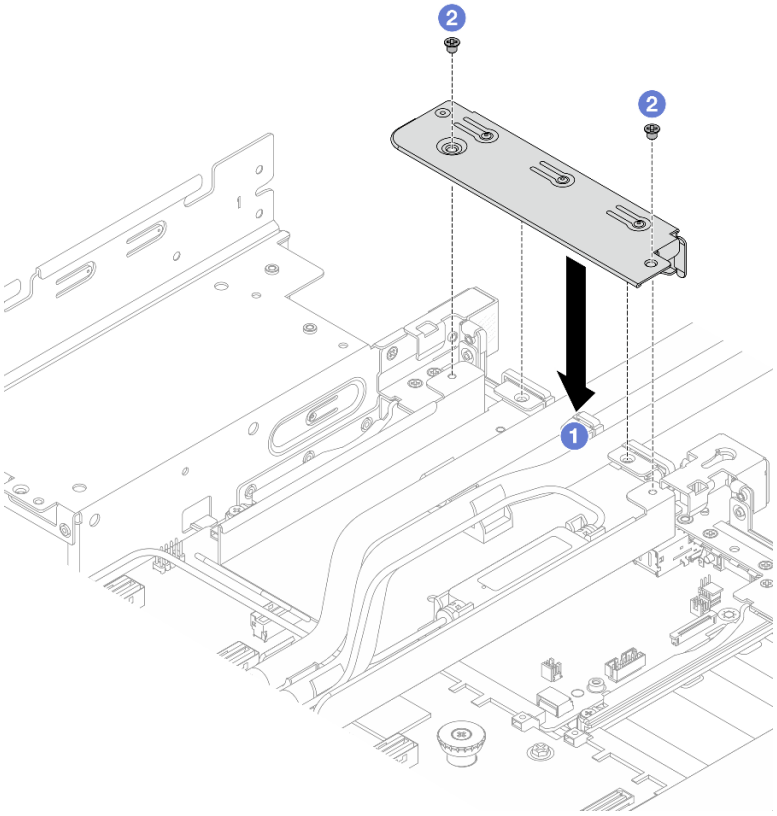

Figure 134. Installing the 1FH bracket

1. 1 Lower the bracket onto the hose holder.
2. 2 Install the screws to secure the bracket into place.

- **3FH riser cage**

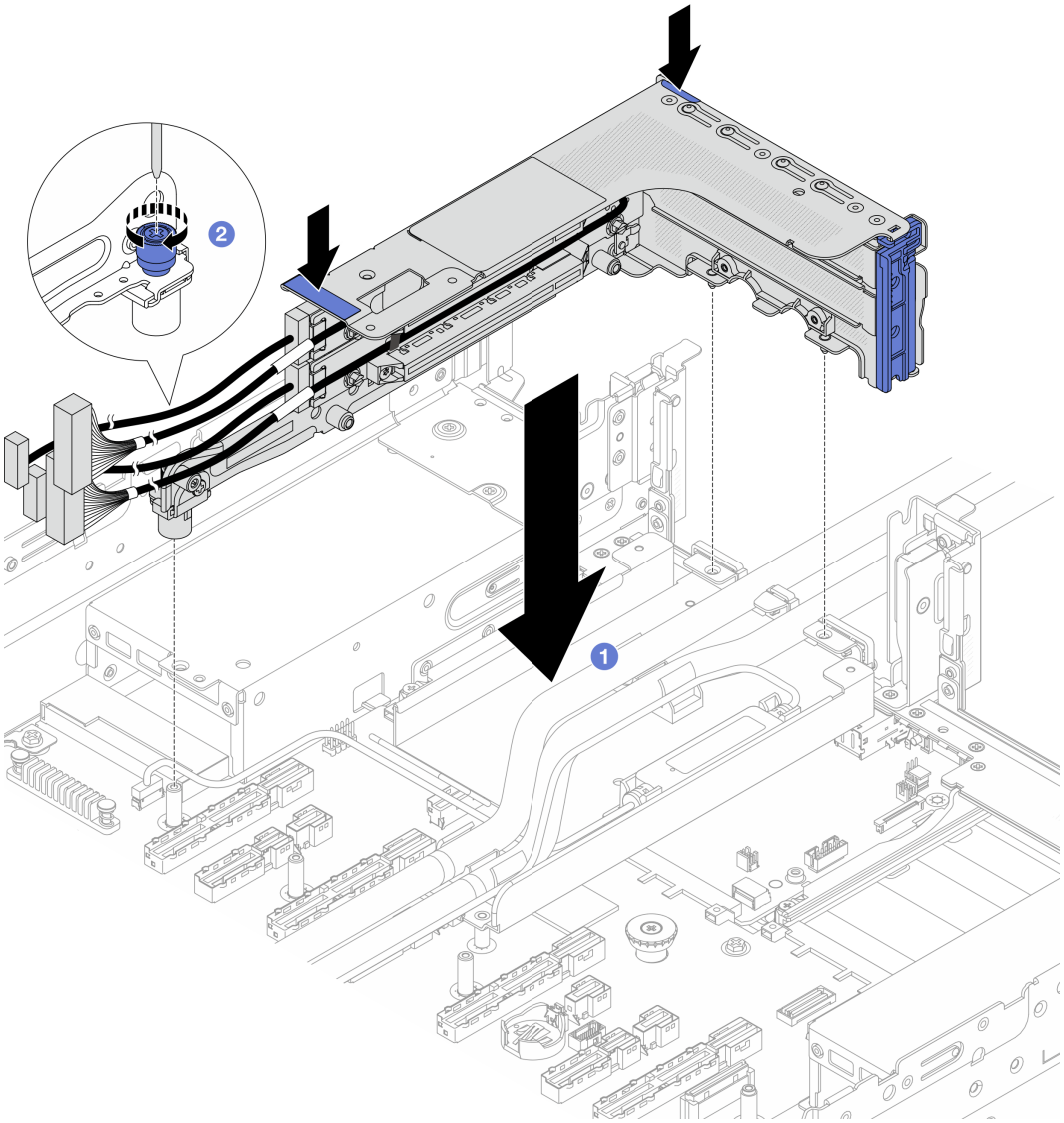

Figure 135. Installing the 3FH riser cage

a. 1 Lower the riser cage into the chassis.

b. 2 Tighten the screw to secure the riser cage.

Step 8. Connect the cable of the leakage detection sensor module to the connector on the system board assembly. See ***Internal Cable Routing Guide***.

Step 9. Install the rear drive cage assembly if needed. See "Rear drive cage replacement" on page 271.

Step 10. Install the air baffle or middle drive cage. See "Install the air baffle" on page 56 or "Install the middle drive backplane and drive cage" on page 221.

Step 11. Install the top cover. See "Install the top cover" on page 337.

Step 12. Install the server into the rack. See "Server replacement" on page 34.

Step 13. Install the quick connect plugs to the manifolds. See "Install the manifold (in-rack system)" on page 176 or "Install the manifold (in-row system)" on page 197.

After you finish

Complete the parts replacement. See “Complete the parts replacement” on page 341.

Hot-swap M.2 drive assembly replacement

Follow the instructions in this section to remove and install a hot-swap M.2 drive assembly.

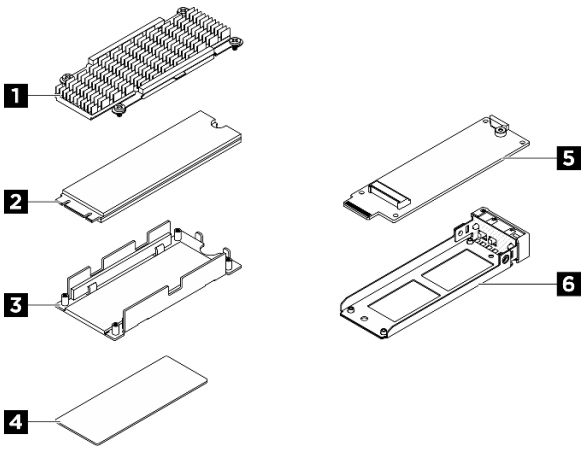

Figure 136. Parts of a hot-swap M.2 drive assembly

1 Heat sink	2 M.2 drive
3 Bottom plate	4 Thermal pad
5 M.2 interposer	6 M.2 drive tray

Remove a hot-swap M.2 drive assembly

Follow the instructions in this section to remove a hot-swap M.2 drive assembly.

About this task

Attention:

- Read “Installation Guidelines” on page 1 and “Safety inspection checklist” on page 2 to ensure that you work safely.
- To make sure that there is adequate system cooling, do not operate the server for more than two minutes without either a drive or a filler installed in each bay.
- If one or more NVMe solid-state drives are to be removed, it is recommended to disable them beforehand via the operating system.
- Before you remove or make changes to drives, drive controllers (including controllers that are integrated on the system board), drive backplanes or drive cables, back up all important data that is stored on drives.
- Before you remove any component of a RAID array (drive, RAID card, etc.), back up all RAID configuration information.

Procedure

Step 1. Remove a hot-swap M.2 drive assembly.

a. (1) Slide the release latch to unlock the handle.

b. 2 Rotate the handle to the open position.

c. 3 Grasp the handle and slide the drive assembly out of the drive bay.

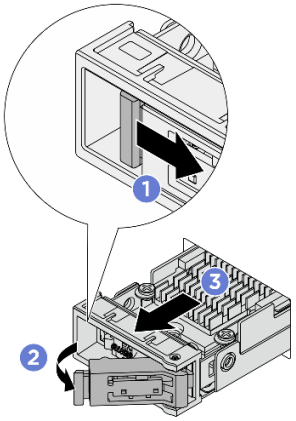

Figure 137. Removing a hot-swap M.2 drive assembly

Step 2. Install a drive tray or replacement drive assembly as soon as possible.

a. To install a replacement drive assembly, see Install a hot-swap M.2 drive assembly.

b. If no replacement drive assembly is to be installed, install a drive tray to the vacant drive bay for adequate system cooling. To separate the drive tray from the hot-swap M.2 drive assembly, see Disassemble an M.2 drive assembly.

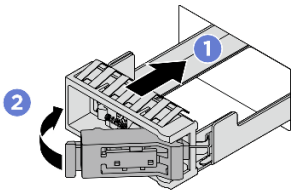

Figure 138. Installing an M.2 drive tray

1 Make sure that the handle is in the open position. Then, align the tray with the guide rails in the bay and gently push the tray into the bay until the tray stops.

2 Rotate the handle to the fully closed position until the handle latch clicks.

After you finish

If you are instructed to return the component or optional device, follow all packaging instructions, and use any packaging materials for shipping that are supplied to you.

Demo video

Watch the procedure on YouTube

Install a hot-swap M.2 drive assembly

Follow the instructions in this section to install a hot-swap M.2 drive assembly.

About this task

Attention:

- Read “Installation Guidelines” on page 1 and “Safety inspection checklist” on page 2 to ensure that you work safely.
- Touch the static-protective package that contains the drive to any unpainted metal surface on the solution; then, remove the drive from the package and place it on a static-protective surface.
- Make sure you save the data on your drive, especially if it is part of a RAID array, before you remove it from the server.
- To avoid damage to the drive connectors, make sure that the server top cover is in place and fully closed whenever you install or remove a drive.
- To make sure that there is adequate system cooling, do not operate the server for more than two minutes without either a drive or a drive bay filler installed in each bay.
- Before you make changes to drives, drive controllers (including controllers that are integrated on the system board), drive backplanes, or drive cables, back up all important data that is stored on drives.
- Before you remove any component of a RAID array (drive, RAID card, etc.), back up all RAID configuration information.

The following notes describe the type of drives that the server supports and other information that you must consider when you install a drive. For a list of supported drives, see https://serverproven.lenovo.com.

- Locate the documentation that comes with the drive and follow those instructions in addition to the instructions in this chapter.
- The electromagnetic interference (EMI) integrity and cooling of the solution are protected by having all bays and PCI and PCIe slots covered or occupied. When you install a drive, PCI, or PCIe adapter, save the EMC shield and filler panel from the bay or PCI or PCIe adapter slot cover in the event that you later remove the device.
- For a complete list of supported optional devices for the server, see https://serverproven.lenovo.com.
- The drive bays are numbered to indicate the installation order (starting from number “0”).
  - For hot-swap M.2 drive assembly to be installed at front of the server, see “Front view” in *User Guide* or *System Configuration Guide* for the drive bay numbering.
  - For hot-swap M.2 drive assembly to be installed at rear of the server, the left bay is M.2 Bay 0, and the right bay is M.2 Bay 1.

Firmware and driver download: You might need to update the firmware or driver after replacing a component.

- Go to https://datacentersupport.lenovo.com/products/servers/thinksystem/sr650v4/downloads/driver-list/ to see the latest firmware and driver updates for your server.
- Go to “Update the firmware” in *User Guide* or *System Configuration Guide* for more information on firmware updating tools.

Procedure

Step 1. If a drive tray is installed in the drive bay, remove the tray.

a. Slide the release latch to unlock the handle.

b. Rotate the handle to the open position.

c. Grasp the handle and slide the tray out of the drive bay.

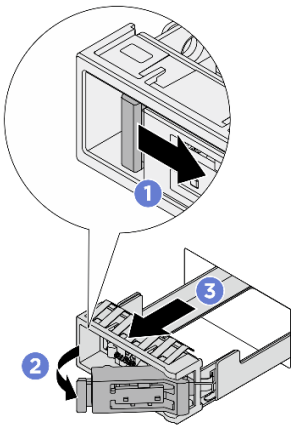

Figure 139. Removing an M.2 drive tray

Step 2. Install the hot-swap M.2 drive assembly.

a. 1 Make sure that the handle is in the open position. Then, align the drive assembly with the guide rails in the bay and gently push the drive assembly into the bay until the drive assembly stops.

b. 2 Rotate the handle to the fully closed position until the handle latch clicks.

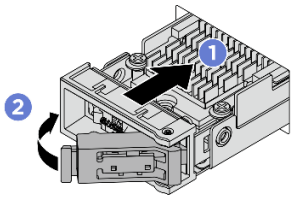

Figure 140. Installing an M.2 drive assembly

Step 3. If there is another M.2 drive assembly to install, do so now; if any of the drive bays is left empty, fill it with a drive tray to the vacant drive bay for adequate system cooling. See "Remove a hot-swap M.2 drive assembly" on page 143 for the details of installing M.2 drive tray.

Step 4. Check the drive status LED to verify that the drive is operating correctly.

- If the yellow drive status LED is lit continuously, the drive is malfunctioning and must be replaced.
- If the green drive activity LED is flashing, the drive is functioning.

After you finish

If the server is configured for RAID operation through a ThinkSystem RAID adapter, you might have to reconfigure your disk arrays after you install drives. See the ThinkSystem RAID adapter documentation for additional information about RAID operation and complete instructions for using ThinkSystem RAID adapter.

Demo video

Watch the procedure on YouTube

Disassemble an M.2 drive assembly

Follow the instructions in this section to disassemble an M.2 drive assembly.

About this task

Attention:

- Read “Installation Guidelines” on page 1 and “Safety inspection checklist” on page 2 to ensure that you work safely.
- Power off the server and peripheral devices and disconnect the power cords and all external cables. See “Power off the server” on page 27.
- Prevent exposure to static electricity, which might lead to system halt and loss of data, by keeping static-sensitive components in their static-protective packages until installation, and handling these devices with an electrostatic-discharge wrist strap or other grounding system.

Procedure

Step 1. Remove the hot-swap M.2 drive assembly from the chassis. See “Remove a hot-swap M.2 drive assembly” on page 143.

Step 2. Remove the M.2 drive with heat sink from the interposer.

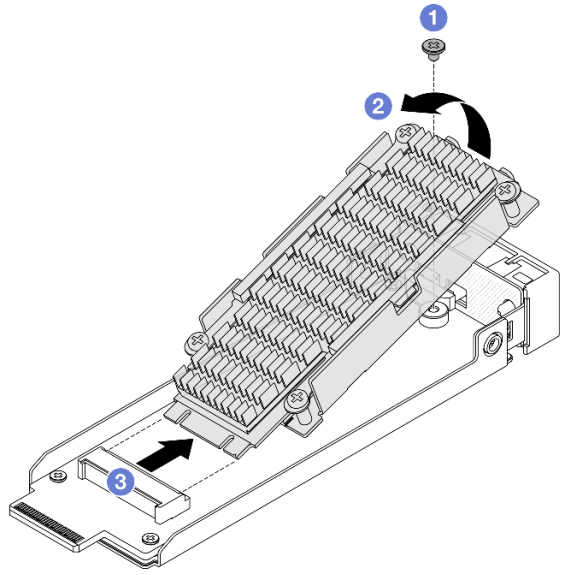

Figure 141. Remove the M.2 drive with heat sink

a. 1 Loosen one screw that secures the M.2 drive.
b. 2 Lift one side of the drive as illustrated above.
c. 3 Remove the M.2 drive from the interposer slot.

Step 3. Remove the M.2 interposer.

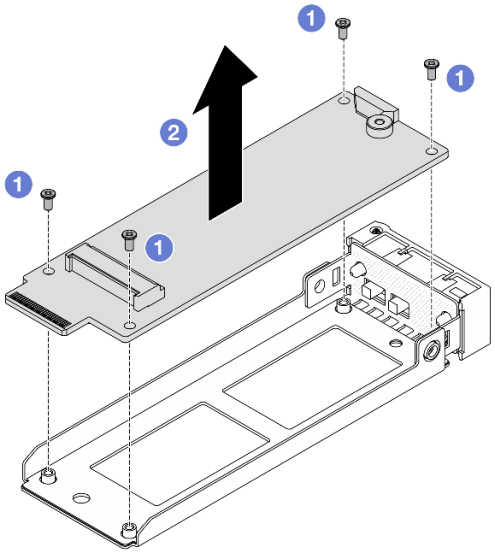

Figure 142. Removing M.2 interposer

a. 1 Loosen four screws that secure the M.2 interposer.

b. 2 Lift the interposer off the tray.

Step 4. If necessary, separate the M.2 drive and the heat sink.

Note: Once the heat sink and bottom plate are separated from the M.2 drive, the used thermal pads are not reusable. If the heat sink and bottom plate are to be reused, clean up the thermal pad residue and apply new thermal pads.

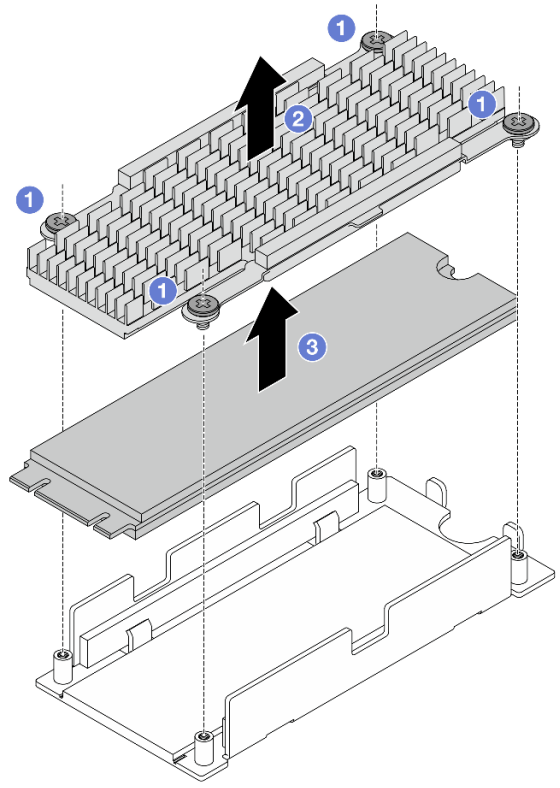

Figure 143. Removing M.2 drive

a. 1 Loosen four screws that secure the heat sink.
b. 2 Lift the heat sink off the bottom plate.
c. 3 Lift the drive off the bottom plate.

Step 5. If the bottom plate and heat sink are to be reused, clean up the residue of the thermal pads.

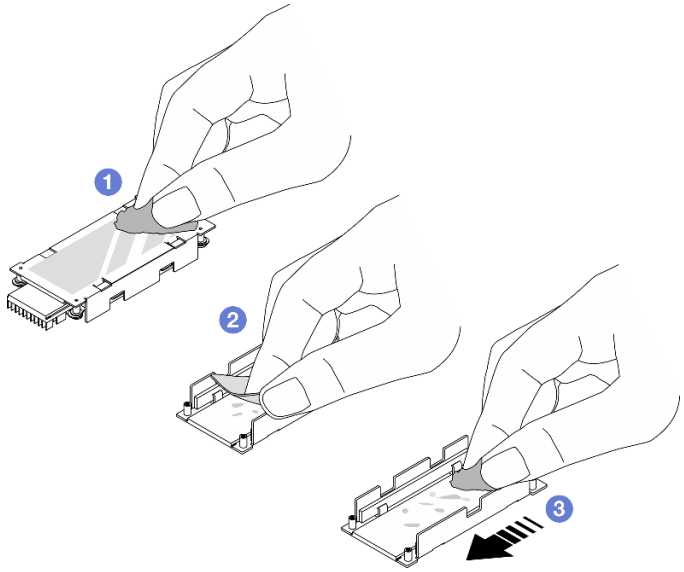

Figure 144. Cleaning heat sink and bottom plate

a. (1) Clean up the thermal pad residue on the back of the heat sink with an alcohol cleaning pad.

b. (2) Peel off the thermal pad on the bottom plate.

c. (3) Clean up the residue by swiping with an alcohol cleaning towel in one direction.

After you finish

If you are instructed to return the component or optional device, follow all packaging instructions, and use any packaging materials for shipping that are supplied to you.

Demo video

Watch the procedure on YouTube

Assemble an M.2 drive assembly

Follow the instructions in this section to assemble an M.2 drive assembly.

About this task

Attention:

- Read “Installation Guidelines” on page 1 and “Safety inspection checklist” on page 2 to ensure that you work safely.
- Power off the server and peripheral devices and disconnect the power cords and all external cables. See “Power off the server” on page 27.
- Prevent exposure to static electricity, which might lead to system halt and loss of data, by keeping static-sensitive components in their static-protective packages until installation, and handling these devices with an electrostatic-discharge wrist strap or other grounding system.

Procedure

Step 1. If necessary, install a new heat sink to the M.2 drive.

a. Before installing a new heat sink to the M.2 drive, peel off the films on the thermal pads.

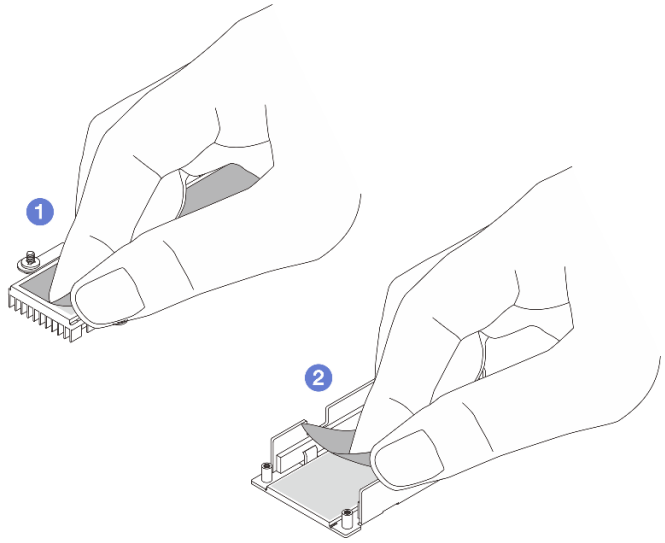

Figure 145. Peeling off the films

1. Peel off the film on the heat sink thermal pad.
2. Peel off the film on the tray thermal pad.

b. Combine the heat sink and the M.2 drive.

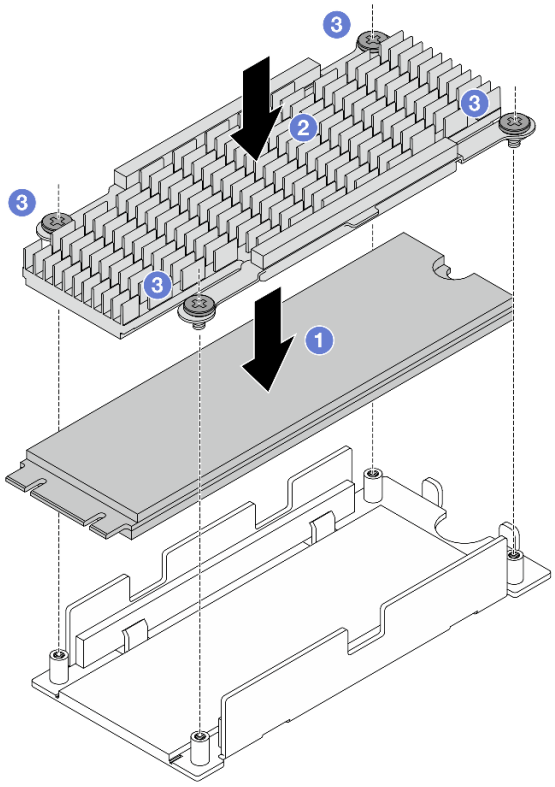

Figure 146. Installing M.2 drive

1. Place the M.2 drive on the bottom plate.
2. Align the heat sink to the guiding pins on the bottom plate.
3. Tighten four screws to secure the drive and heat sink.

Step 2. Install the M.2 interposer to the tray.

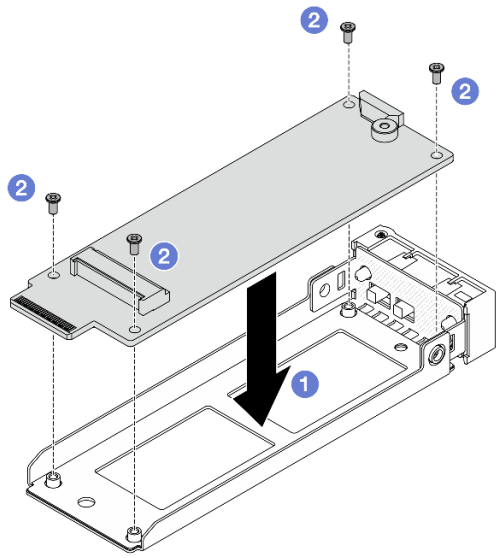

Figure 147. Installing M.2 interposer

a. Align the interposer to the guiding pins on the tray.

b. Tighten four screws to secure the interposer.

Step 3. Install the M.2 drive with heat sink to the interposer

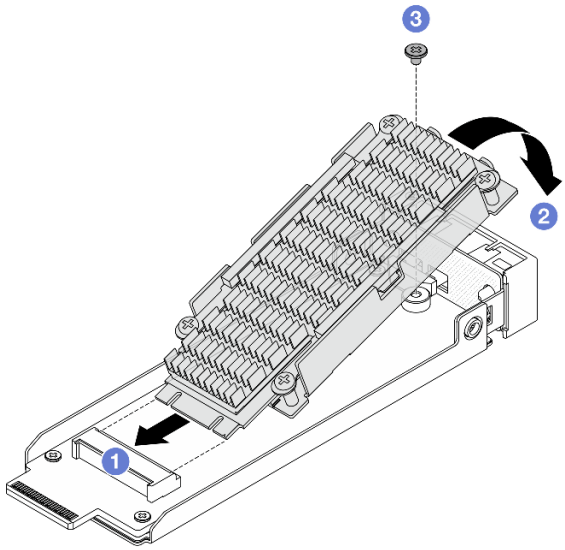

Figure 148. Installing the M.2 drive with heat sink

a. Hold the M.2 drive with heat sink at an angle, and insert the drive to the interposer slot.

b. Press the drive down to the interposer.

c. Tighten one screw to secure the drive.

After you finish

Complete the parts replacement. See “Complete the parts replacement” on page 341.

Demo video

Watch the procedure on YouTube

M.2 drive cage and drive backplanes replacement

Follow the instructions in this section to remove and install the M.2 drive cage and drive backplanes.

Remove the front M.2 drive cage and drive backplanes

Follow the instructions in this section to remove the front M.2 drive cage and drive backplanes.

About this task

Attention:

- Read “Installation Guidelines” on page 1 and “Safety inspection checklist” on page 2 to ensure that you work safely.
- Power off the server and peripheral devices and disconnect the power cords and all external cables. See “Power off the server” on page 27.
- Prevent exposure to static electricity, which might lead to system halt and loss of data, by keeping static-sensitive components in their static-protective packages until installation, and handling these devices with an electrostatic-discharge wrist strap or other grounding system.

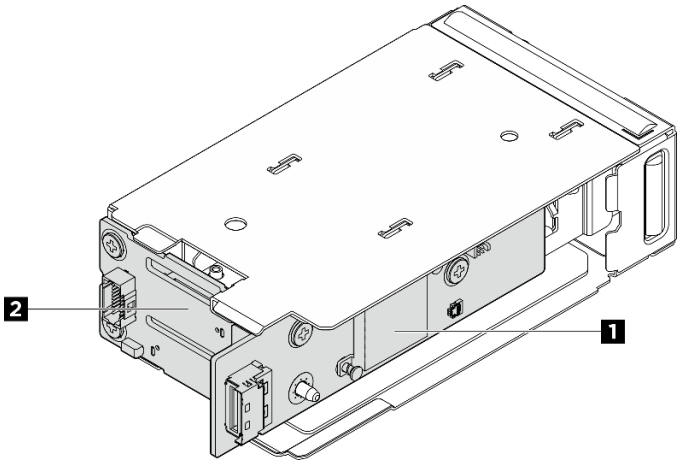

Figure 149. Front M.2 drive backplanes

1 M.2 controller board	2 M.2 boot backplane

Procedure

Step 1. Make preparations for this task.

a. If the server is installed in a rack, slide the server out on its rack slide rails to gain access to the top cover, or remove the server from the rack. See “Server replacement” on page 34.

b. Remove all hot-swap M.2 drive assemblies installed in the front M.2 drive cage. See “Remove a hot-swap M.2 drive assembly” on page 143 .

c. Remove the top cover. See “Remove the top cover” on page 335.

d. Disconnect the power and signal cables from the M.2 backplanes.

Step 2. (Optional) For configurations with E3.S drives or CXL memory modules (CMMs), remove the front M.2 drive cage with cage frame from the chassis.

a. 1 Open the latch to disengage the drive cage with frame.

b. 2 Slide the drive cage with frame out of the chassis.

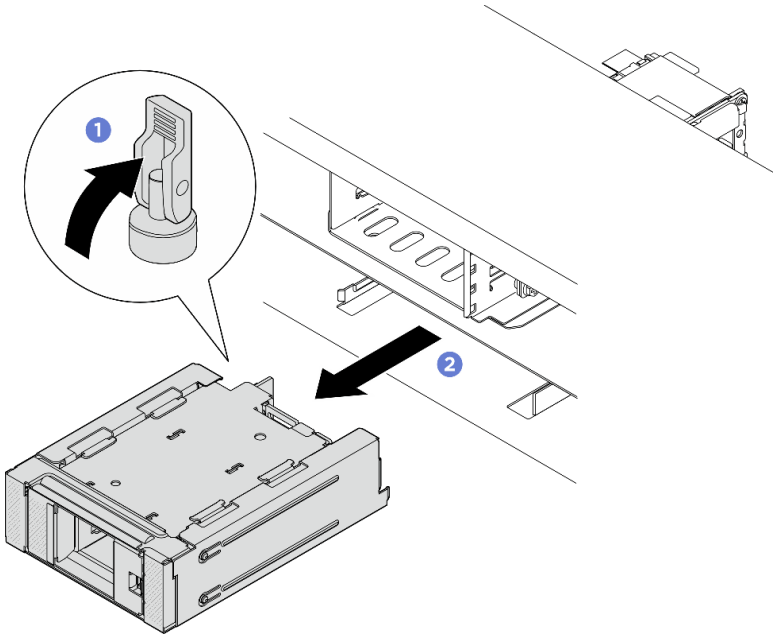

Figure 150. Removing the front M.2 drive cage with cage frame

Step 3. Remove the front M.2 drive cage.

- For configurations with 2.5-inch drives at front of the server, remove the front M.2 drive cage from the chassis.
- For configurations with E3.S drives or CMMs, remove the front M.2 drive cage from the cage frame.

a. 1 Press the release latch with a flat-head screwdriver to disengage the drive cage.

b. 2 Slide the drive cage out to remove it.

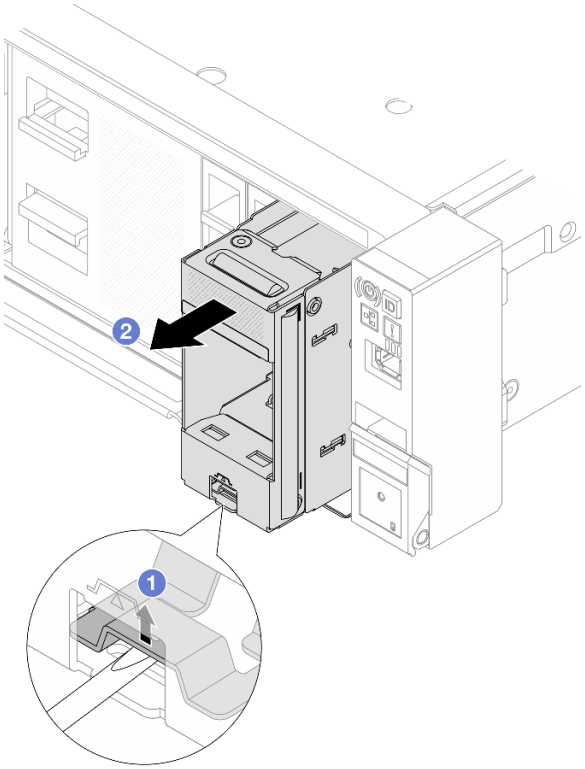

Figure 151. Removing the front M.2 drive cage from the chassis

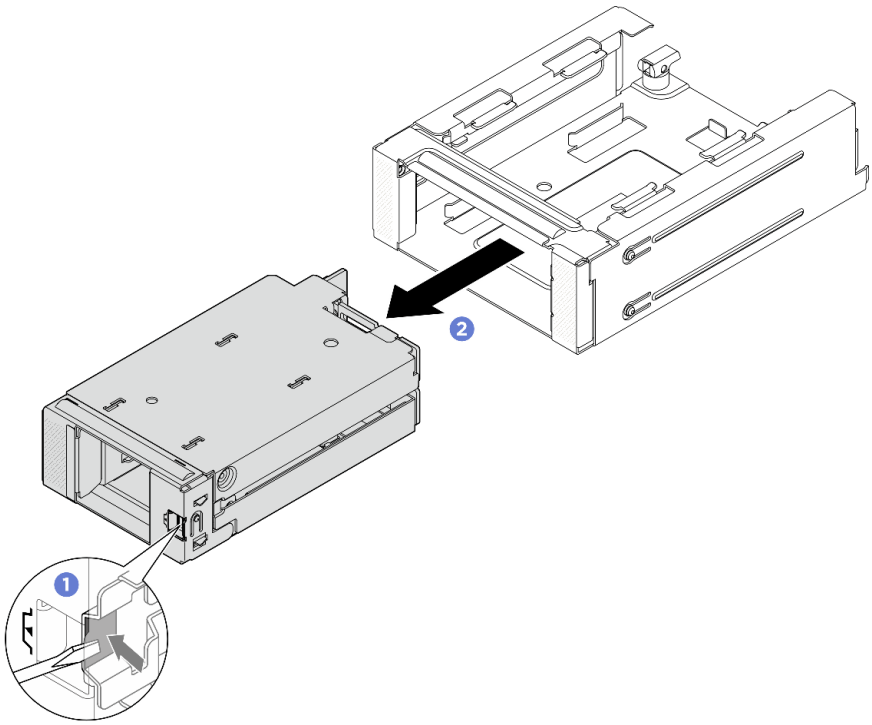

Figure 152. Removing the front M.2 drive cage from the cage frame

Step 4. Remove the front M.2 controller board from the drive cage.

a. 1 Loosen the two screws that secure the controller board.

b. 2 Remove the controller board from the drive cage.

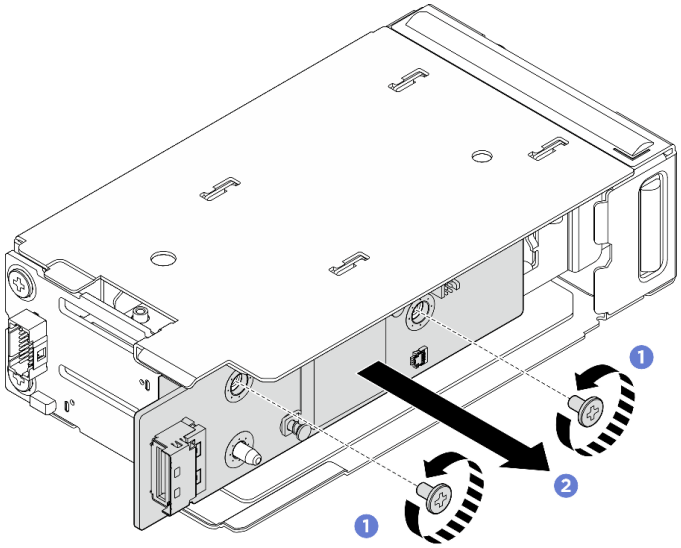

Figure 153. Removing the front M.2 controller board

Step 5. Remove the front M.2 boot backplane from the drive cage.

a. Loosen the two screws that secure the backplane.

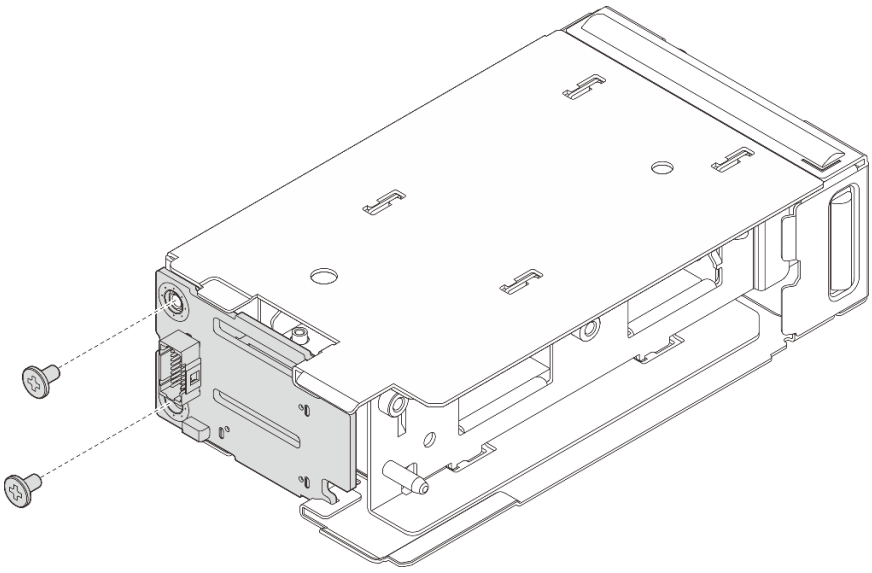

Figure 154. Removing the front M.2 boot backplane

a. 1 Pivot the left side of backplane away from the drive cage.

b. 2 Remove the backplane from the drive cage.

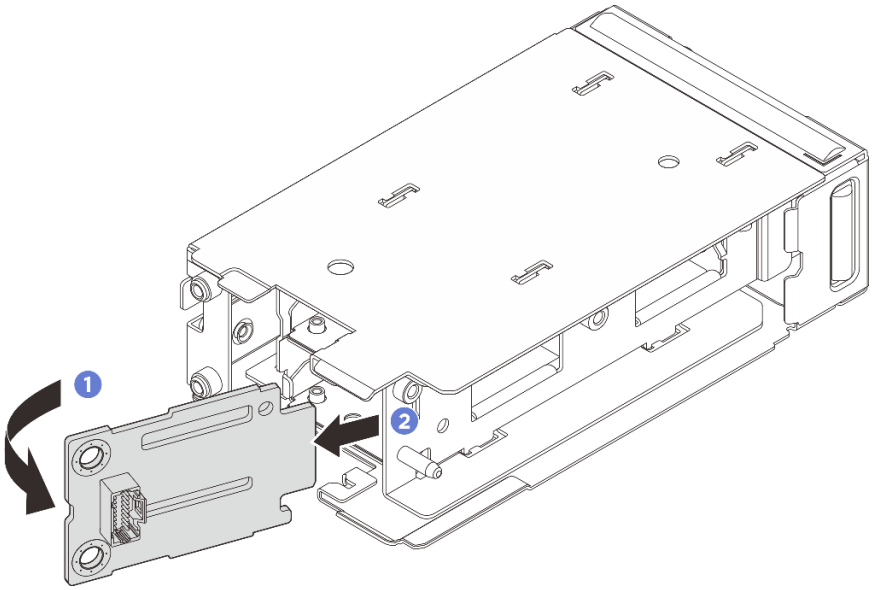

Figure 155. Removing the front M.2 boot backplane

After you finish

If you are instructed to return the component or optional device, follow all packaging instructions, and use any packaging materials for shipping that are supplied to you.

Demo video

Watch the procedure on YouTube

Install the front M.2 drive cage and drive backplanes

Follow the instructions in this section to install the front M.2 drive cage and drive backplanes.

About this task

Attention:

- Read “Installation Guidelines” on page 1 and “Safety inspection checklist” on page 2 to ensure that you work safely.
- Power off the server and peripheral devices and disconnect the power cords and all external cables. See “Power off the server” on page 27.
- Prevent exposure to static electricity, which might lead to system halt and loss of data, by keeping static-sensitive components in their static-protective packages until installation, and handling these devices with an electrostatic-discharge wrist strap or other grounding system.

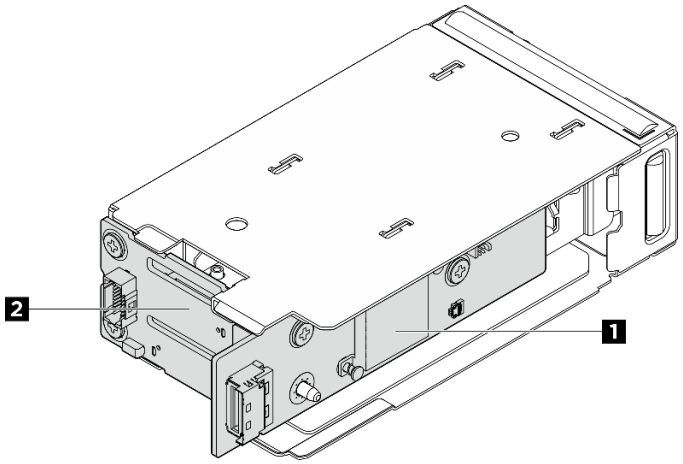

Figure 156. Front M.2 drive backplanes

1 M.2 controller board	2 M.2 boot backplane

Procedure

Step 1. Install the M.2 boot backplane to the drive cage.

a. (1) Insert the right side of the backplane to the drive cage.

b. (2) Pivot the left side of the backplane toward the drive cage.

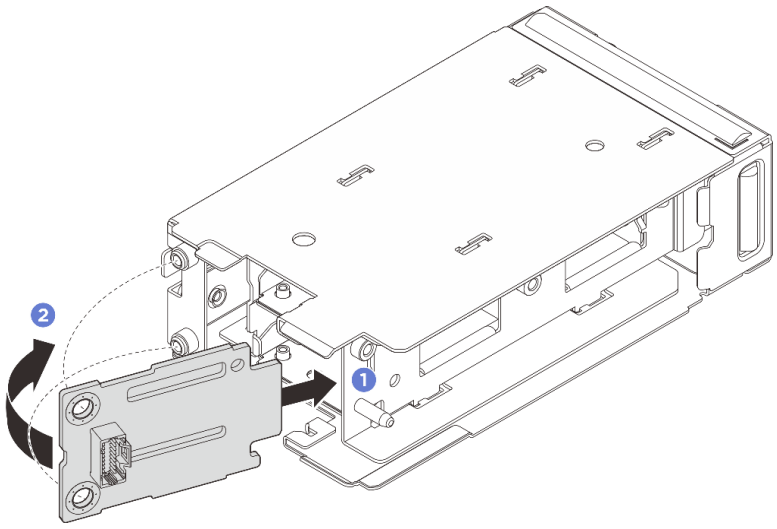

Figure 157. Installing the M.2 boot backplane

a. Fasten two screws to secure the backplane.

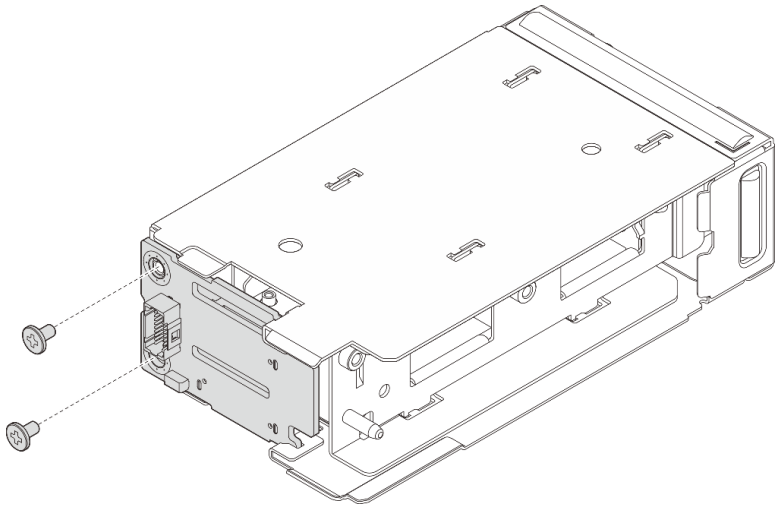

Figure 158. Installing the M.2 boot backplane

Step 2. Install the M.2 controller board to the drive cage.

a. (1) Install the controller board to the drive cage. Make sure that the boot backplane contacts are fully seated in the connector on the controller board as illustrated.

b. (2) Fasten two screws to secure the controller board.

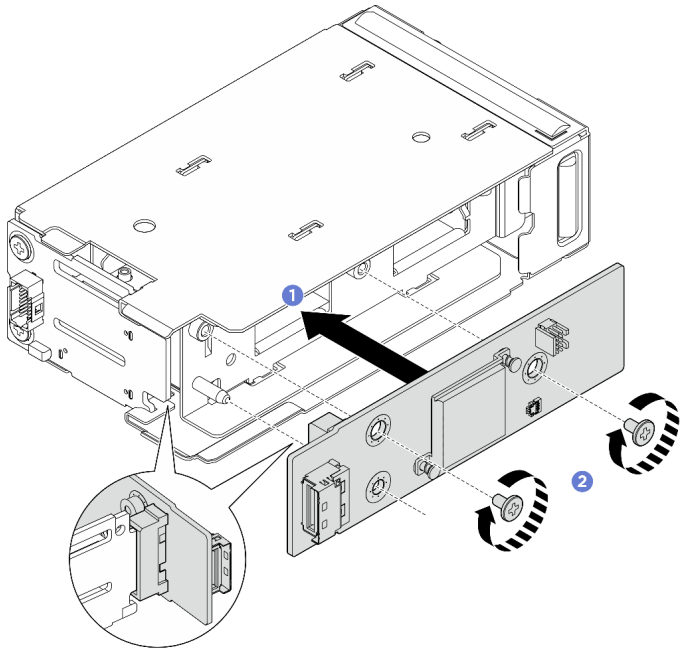

Figure 159. Installing the front M.2 controller board

Step 3. Install the front M.2 drive cage.

- For configurations with 2.5-inch drives at front of the server, slide the front M.2 drive cage into the chassis until it clicks into place.
- For configurations with E3.S drives or CXL memory modules (CMMs), slide the front M.2 drive cage into the frame until it clicks into place.

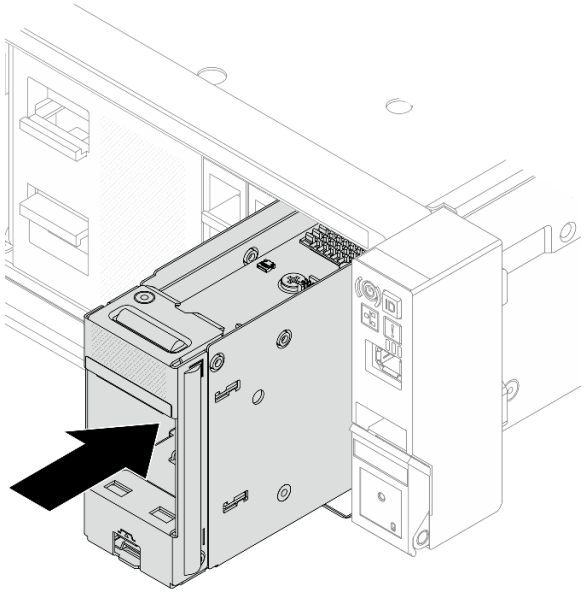

Figure 160. Installing the front M.2 drive cage into the chassis

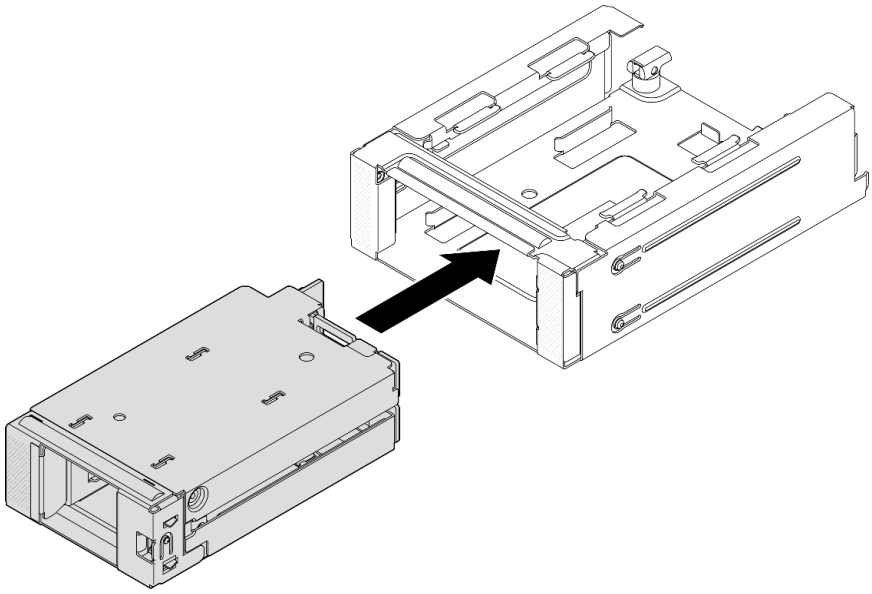

Figure 161. Installing the front M.2 drive cage into the cage frame

Step 4. For configurations with E3.S drives or CMMs, install the front M.2 drive cage with cage frame into the chassis.

a. 1 Make sure that the latch is in the open position.

b. 2 Slide the drive cage with frame into the chassis until the guide pin on the chassis is seated into place.

c. 3 Press the latch down to secure the drive cage with frame.

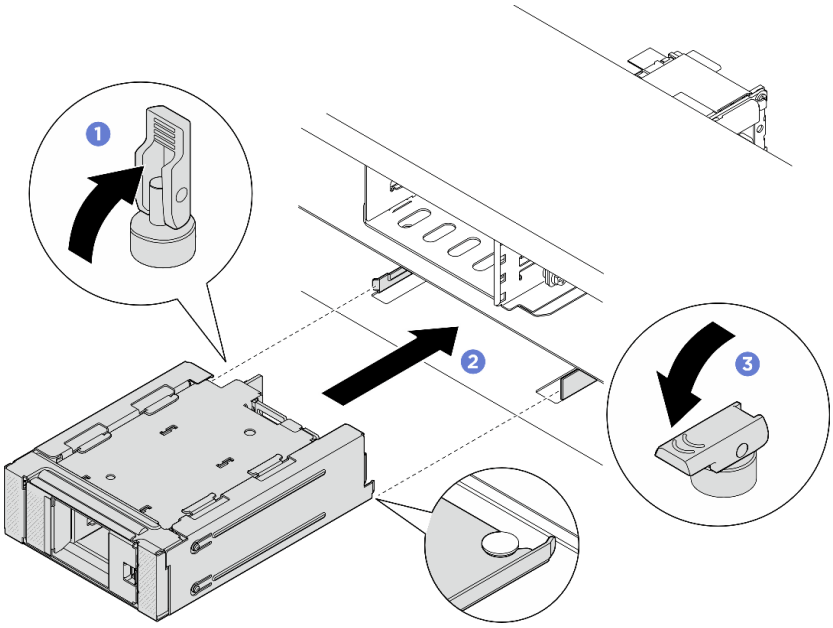

Figure 162. Installing the front M.2 drive cage with frame

Figure 163. Installing the front M.2 drive cage with frame

Step 5. Connect the power and signal cables to the backplanes. See ***Internal Cable Routing Guide***.

After you finish

Complete the parts replacement. See "Complete the parts replacement" on page 341.

Demo video

Watch the procedure on YouTube

Remove the rear M.2 riser cage and drive backplane

Follow the instructions in this section to remove the rear M.2 riser cage and drive backplane.

About this task

Attention:

- Read "Installation Guidelines" on page 1 and "Safety inspection checklist" on page 2 to ensure that you work safely.
- Power off the server and peripheral devices and disconnect the power cords and all external cables. See "Power off the server" on page 27.
- Prevent exposure to static electricity, which might lead to system halt and loss of data, by keeping static-sensitive components in their static-protective packages until installation, and handling these devices with an electrostatic-discharge wrist strap or other grounding system.

Procedure

Step 1. Make preparations for this task.

a. If the server is installed in a rack, slide the server out on its rack slide rails to gain access to the top cover, or remove the server from the rack. See “Server replacement” on page 34.

b. Remove all hot-swap M.2 drive assemblies installed at rear of the server. See “Remove a hot-swap M.2 drive assembly” on page 143.

c. Remove the top cover. See “Remove the top cover” on page 335.

Step 2. If the rear M.2 backplane is installed in a 3FH M.2 riser cage, do the following:

a. Disconnect riser card cables, PCIe adapter cables, the M.2 backplane power and signal cables from the system board assembly.

Attention: To avoid damaging the system board assembly, make sure to follow the instructions in ***Internal Cable Routing Guide*** when disconnecting cables from the system board assembly.

b. Remove the M.2 riser cage that the M.2 backplane is installed in. See “Remove a rear riser assembly” on page 291.

c. Remove all the PCIe adapters installed in the riser assembly. See “Remove a rear PCIe adapter and riser card” on page 294.

Step 3. If the rear M.2 backplane is installed in a 1FH M.2 riser cage, do the following:

a. If applicable, remove the rear drive cage and the rear riser assembly that are on the top of 1FH M.2 riser cage. See Rear drive cage replacement and “Remove a rear riser assembly” on page 291.

b. Disconnect the M.2 backplane power and signal cables from the system board assembly; then, remove the 1FH M.2 riser cage from the chassis. See “Remove a rear riser assembly” on page 291.

Step 4. Disconnect the M.2 backplane power and signal cables from the M.2 backplane.

Step 5. Remove the M.2 backplane from the M.2 riser cage.

a. 1 Loosen the screw that secures the backplane.

b. 2 Slide the backplane away from the cage; then, lift the backplane to remove it.

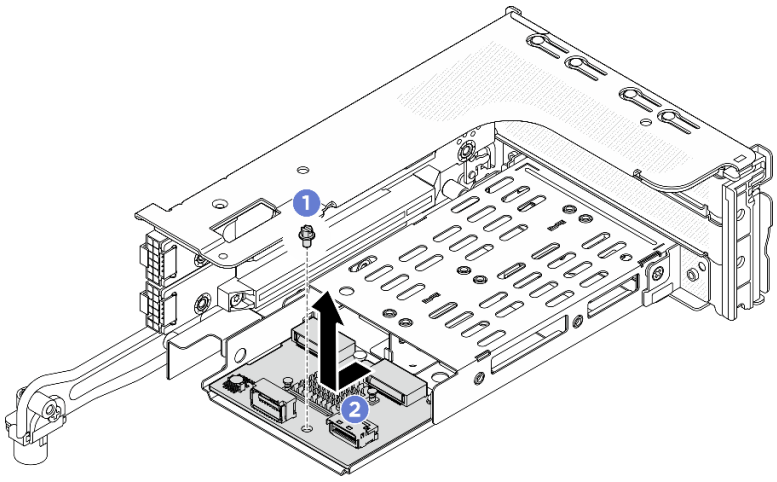

Figure 164. Removing the M.2 backplane from 3FH M.2 riser cage

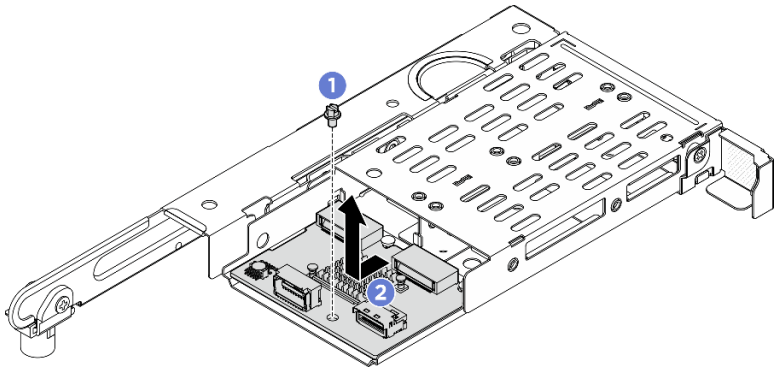

Figure 165. Removing the M.2 backplane from 1FH M.2 riser cage

After you finish

If you are instructed to return the component or optional device, follow all packaging instructions, and use any packaging materials for shipping that are supplied to you.

Demo video

Watch the procedure on YouTube

Install the rear M.2 riser cage and drive backplane

Follow the instructions in this section to install the rear M.2 riser cage and drive backplane.

About this task

Attention:

- Read “Installation Guidelines” on page 1 and “Safety inspection checklist” on page 2 to ensure that you work safely.
- Power off the server and peripheral devices and disconnect the power cords and all external cables. See “Power off the server” on page 27.
- Prevent exposure to static electricity, which might lead to system halt and loss of data, by keeping static-sensitive components in their static-protective packages until installation, and handling these devices with an electrostatic-discharge wrist strap or other grounding system.

Procedure

Step 1. Install the rear M.2 backplane to the riser cage.

a. (1) Align the backplane with the guide pin on the riser cage; then, slide the backplane toward the riser cage until the guide pin is seated in place.

b. (2) Fasten one screw to secure the backplane.

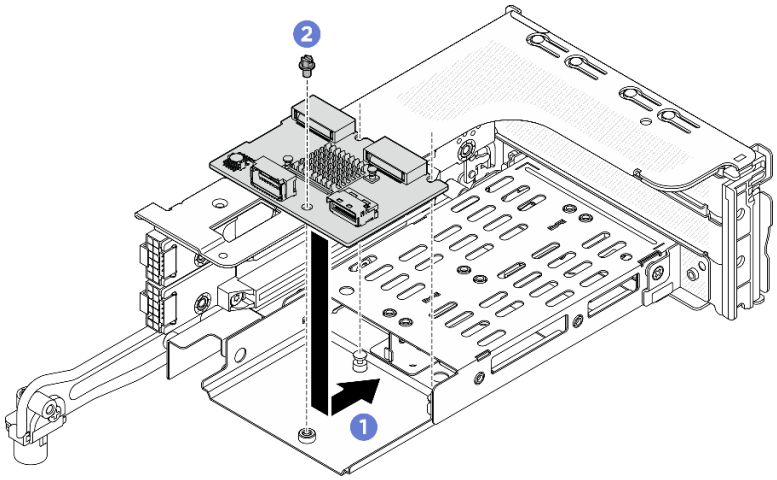

Figure 166. Installing the M.2 backplane to 3FH M.2 riser cage

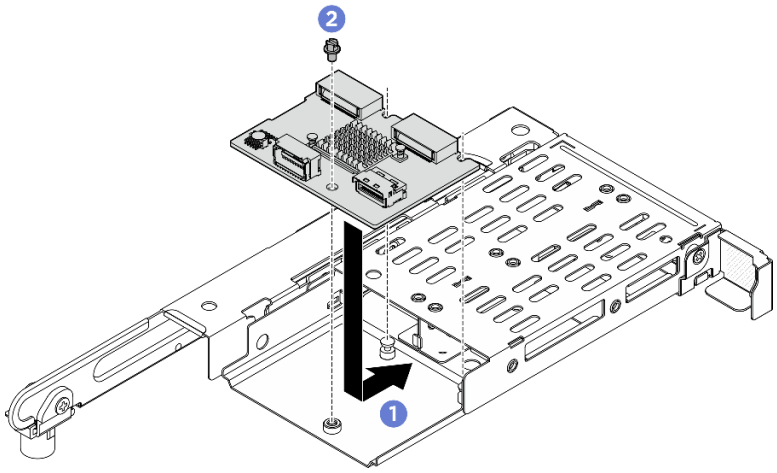

Figure 167. Installing the M.2 backplane to 1FH M.2 riser cage

Step 2. If necessary, reinstall the PCIe adapters to the riser cage. See "Install a rear PCIe adapter and riser card" on page 298.

Step 3. Install the M.2 riser cage to the chassis. See "Install a rear riser assembly" on page 302.

Step 4. Connect the power and signal cables to the M.2 backplane. See ***Internal Cable Routing Guide***.

After you finish

Complete the parts replacement. See "Complete the parts replacement" on page 341.

Demo video

Watch the procedure on YouTube

Management NIC adapter replacement

Depending on the model, the management NIC adapter might not be available.

Notes:
- Depending on the model, the management NIC adapter might not be supported.

- If the ThinkSystem V4 Management NIC Adapter Kit (management NIC adapter) is installed on the server, it will not be displayed on the PCIe card list of system management software, such as XCC, LXPM, and so on.
- “Remove the management NIC adapter” on page 165
- “Install the management NIC adapter” on page 166

Remove the management NIC adapter

Follow the instructions in this section to remove the management NIC adapter.

About this task

Attention:

- Read “Installation Guidelines” on page 1 and “Safety inspection checklist” on page 2 to ensure that you work safely.
- Power off the server and peripheral devices and disconnect the power cords and all external cables. See “Power off the server” on page 27.
- Prevent exposure to static electricity, which might lead to system halt and loss of data, by keeping static-sensitive components in their static-protective packages until installation, and handling these devices with an electrostatic-discharge wrist strap or other grounding system.

Procedure

Step 1. Make preparation for the task.

a. Access the Lenovo XClarity Controller; then, select **Network** in **BMC Configuration** and disable **Ethernet Port 2**.

b. If the server is installed in a rack, slide the server out on its rack slide rails to gain access to the top cover, or remove the server from the rack. See “Server replacement” on page 34.

c. Remove the top cover. See “Remove the top cover” on page 335.

Step 2. Disconnect the cable from the management NIC adapter.

Step 3. Remove the management NIC adapter.

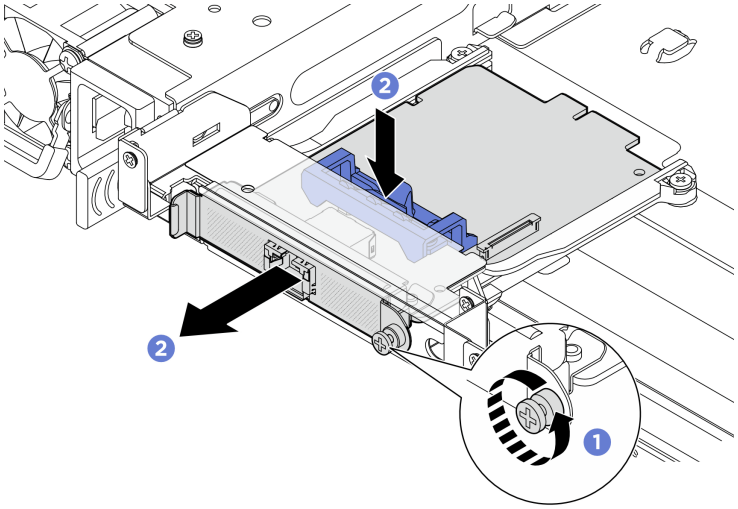

Figure 168. Removing the management NIC adapter

a. Loosen the screw that secures the management NIC adapter.

b. Press and hold the blue latch. Then, push the adapter by the latch out from the chassis.

After you finish

1. Install a replacement unit or a filler. See “Install the management NIC adapter” on page 166.
2. If you are instructed to return the component or optional device, follow all packaging instructions, and use any packaging materials for shipping that are supplied to you.

Demo video

Watch the procedure on YouTube

Install the management NIC adapter

Follow the instructions in this section to install the management NIC adapter.

About this task

- Read “Installation Guidelines” on page 1 and “Safety inspection checklist” on page 2 to ensure that you work safely.
- Power off the server and peripheral devices and disconnect the power cords and all external cables. See “Power off the server” on page 27.
- Prevent exposure to static electricity, which might lead to system halt and loss of data, by keeping static-sensitive components in their static-protective packages until installation, and handling these devices with an electrostatic-discharge wrist strap or other grounding system.

Firmware and driver download: You might need to update the firmware or driver after replacing a component.

- Go to https://datacentersupport.lenovo.com/products/servers/thinksystem/sr650v4/downloads/driver-list/ to see the latest firmware and driver updates for your server.
- Go to “Update the firmware” in *User Guide* or *System Configuration Guide* for more information on firmware updating tools.

Procedure

Step 1. Touch the static-protective package that contains the new part to any unpainted surface on the outside of the server. Then, take the new part out of the package and place it on a static-protective surface.

Step 2. If a filler is installed, remove it.

Step 3. Install the management NIC adapter.

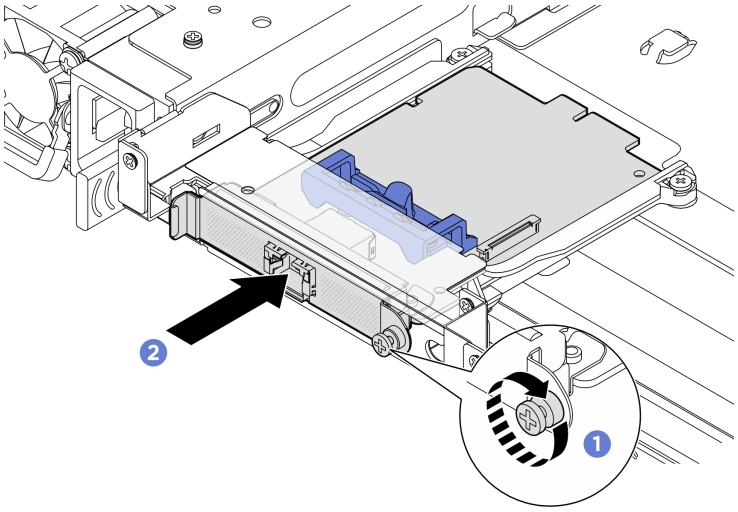

Figure 169. Installing the management NIC adapter

a. 1 Slide the management NIC adapter into the slot until it is fully seated.

b. 2 Tighten the screw to secure the management NIC adapter.

Step 4. Connect the cable to the management NIC adapter. See ***Internal Cable Routing Guide***.

After you finish

1. Complete the parts replacement. See "Complete the parts replacement" on page 341.
2. Access the Lenovo XClarity Controller; then, select **Network** in **BMC Configuration** and enable **Ethernet Port 2**.

   Note: If the ThinkSystem V4 Management NIC Adapter Kit (management NIC adapter) is installed on the server, it will not be displayed on the PCIe card list of system management software, such as XCC, LXPM, and so on.

Demo video

Watch the procedure on YouTube

Manifold replacement (trained technicians only)

Follow the instructions in this section to remove and install the manifolds.

Important: This task must be operated by trained technicians that are certified by Lenovo Service. Do not attempt to remove or install the part without proper training and qualification.

Contact Lenovo Professional Services team for help when installing the part for the first time.

The liquid runs through the cooling system is de-ionized water. For more information about the liquid, see "Water requirements" on page 355.

The server can be installed in the ThinkSystem Heavy Duty Full Depth Rack Cabinets. For ThinkSystem Heavy Duty Full Depth Rack Cabinets User Guide, see ThinkSystem Heavy Duty Full Depth Rack Cabinets User Guide.

For more operation and maintenance guidelines on Coolant Distribution Unit (CDU), see Lenovo Neptune DWC RM100 in-rack Coolant Distribution Unit (CDU) Operation & Maintenance Guide.

The illustrations below present the rear views of a rack cabinet; three sets of manifolds and three sets of connection hoses. There are two labels attached to the front of the manifolds, and one label on one end of each hose.

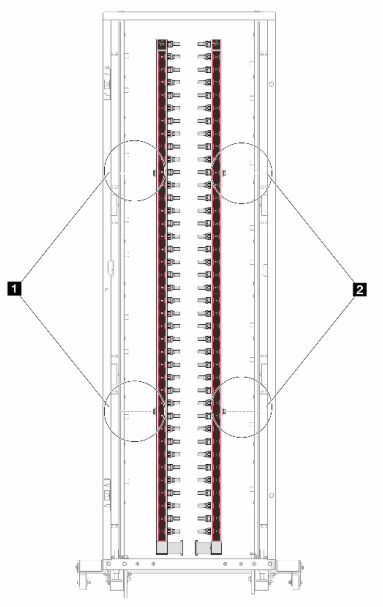

Figure 170. Manifolds in a 42U in-row system

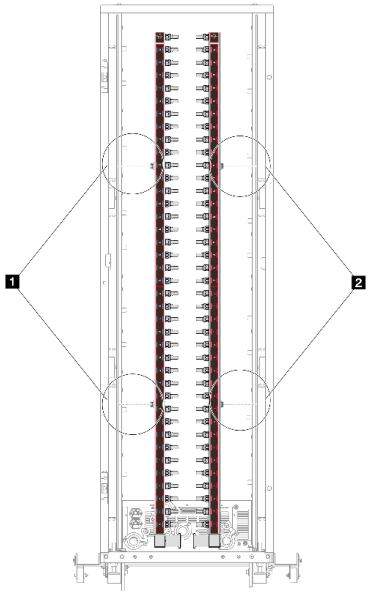

Figure 171. Manifolds in a 42U in-rack system

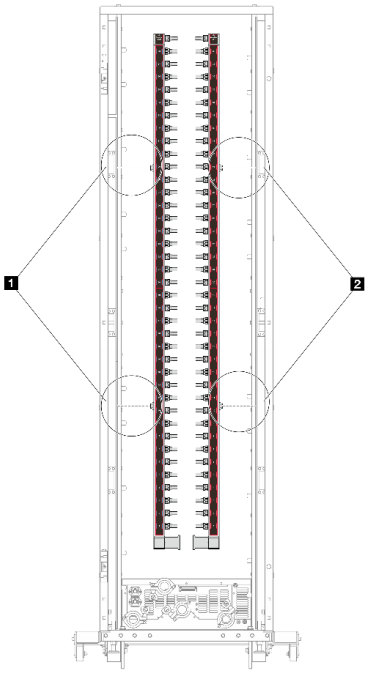

Figure 172. Manifolds in a 48U in-rack system

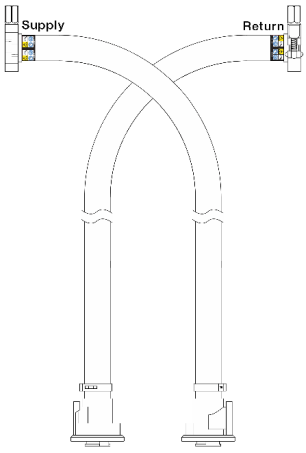

Figure 173. 42U in-row hose kit

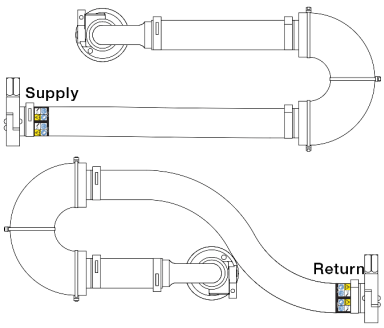

Figure 174. 42U in-rack connection set

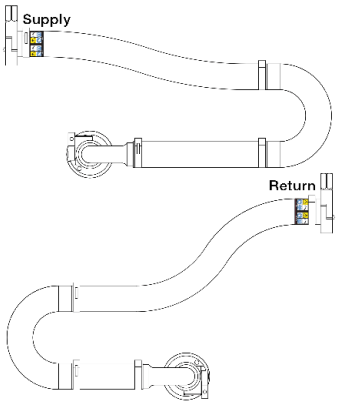

Figure 175. 48U in-rack connection set

1 Two left spools on supply manifold
2 Two right spools on return manifold

- "Remove the manifold (in-rack system)" on page 169

- “Install the manifold (in-rack system)” on page 176
- “Remove the manifold (in-row system)” on page 188
- “Install the manifold (in-row system)” on page 197

Remove the manifold (in-rack system)

Follow the instructions to remove the manifold in an in-rack direct water cooling system.

About this task

Important: This task must be operated by trained technicians that are certified by Lenovo Service. Do not attempt to remove or install the part without proper training and qualification.

CAUTION:
The liquid might cause irritation to the skin and eyes. Avoid direct contact with the liquid.

S002

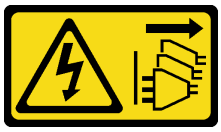

CAUTION:
The power-control button on the device and the power switch on the power supply do not turn off the electrical current supplied to the device. The device also might have more than one power cord. To remove all electrical current from the device, ensure that all power cords are disconnected from the power source.

S011



CAUTION:
Sharp edges, corners, or joints nearby.

S038



CAUTION:
Eye protection should be worn for this procedure.

S040



CAUTION:
Protective gloves should be worn for this procedure.

S042



DANGER

Risk of electric shock due to water or a water solution which is present in this product. Avoid working on or near energized equipment with wet hands or when spilled water is present.

Attention:

- Read "Installation Guidelines" on page 1 and "Safety inspection checklist" on page 2 to ensure that you work safely.
- Power off the server and peripheral devices and disconnect the power cords and all external cables. See "Power off the server" on page 27.
- Prevent exposure to static electricity, which might lead to system halt and loss of data, by keeping static-sensitive components in their static-protective packages until installation, and handling these devices with an electrostatic-discharge wrist strap or other grounding system.
- Ensure proper handling procedures are followed when working with any chemically treated liquid used in the rack cooling system. Ensure that material safety data sheets (MSDS) and safety information are provided by the liquid chemical treatment supplier and that proper personal protective equipment (PPE) is available as recommended by the liquid chemical treatment supplier. Protective gloves and eyewear may be recommended as a precaution.
- This task requires two or more people.

Procedure

Note: Your server may differ from that shown in the illustrations, but the procedure is the same.

Step 1. Power off the in-rack CDU and disconnect all power cords.

Step 2. Close both ball valves.

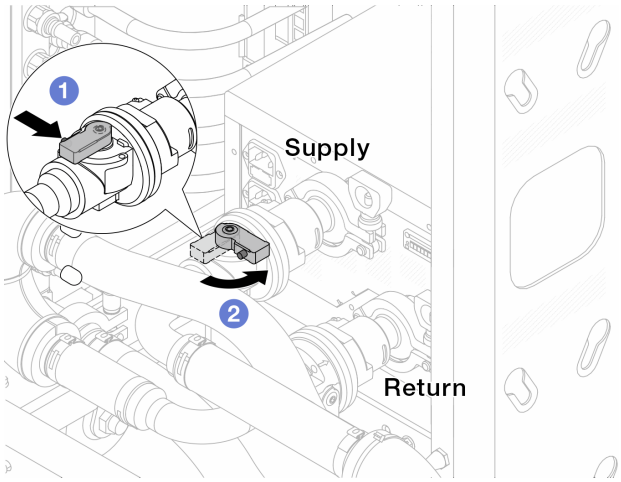

Figure 176. Closing ball valves

a. 1 Press the button on the ball valve switch.

b. 2 Rotate the switch to close the valves as illustrated above.

Step 3. Remove the quick connect plugs to separate the hoses of Processor Neptune Core Module or Compute Complex Neptune Core Module from the manifold.

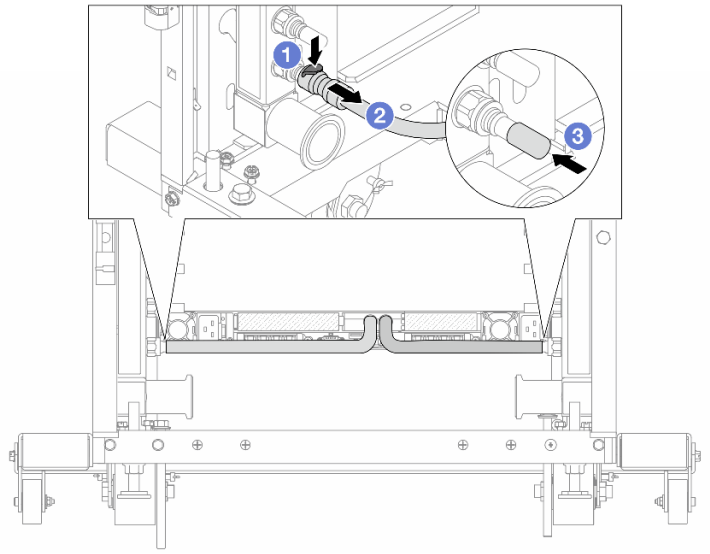

Figure 177. Quick connect plug removal

a. 1 Press the latch down to unlock the hose.

b. 2 Pull the hose off.

c. 3 Re-install the rubber quick connect plug covers to the ports on the manifold.

Step 4. Repeat Step 3 on page 171 to the other manifold.

Step 5. Disengage the connection set from ball valves.

Note: Disengage the return side first, then disengage the supply side.

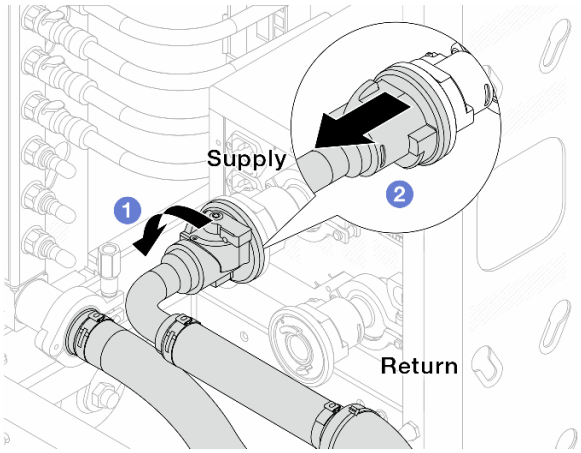

Figure 178. Removing the connection set

a. 1 Rotate the ball valve to the left.

b. 2 Pull the connection set off from ball valve.

Step 6. Remove the return manifold with the connection set attached.

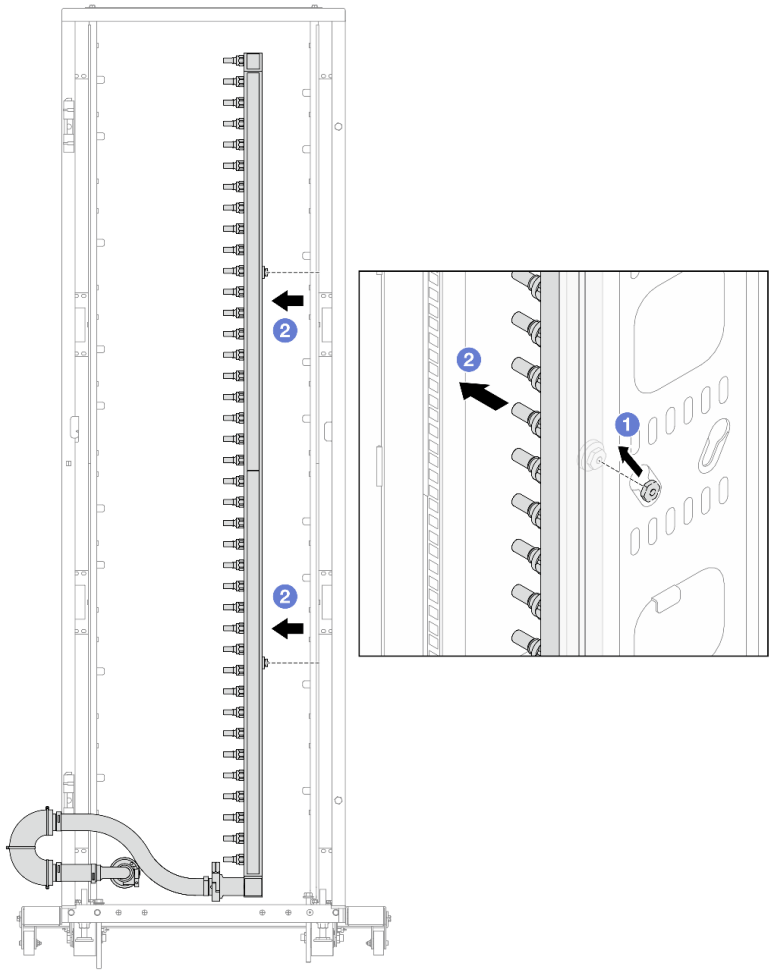

Figure 179. Removing the manifold

a. 1 Hold the manifold with both hands, and lift it upward to relocate the spools from the small openings to large ones on the rack cabinet.

b. 2 Remove the manifold with the connection set attached.

Step 7. Repeat Step 6 on page 172 to the supply manifold.

Notes:

- There is remaining liquid inside the manifold and the connection set. Remove both together and leave the further draining to the next step.
- For more information about the rack cabinet, see ThinkSystem Heavy Duty Full Depth Rack Cabinets User Guide.

Step 8. Install the bleeder kit to the manifold supply side.

Note: This step drains the liquid with the help of a pressure difference inside and outside the supply manifold.

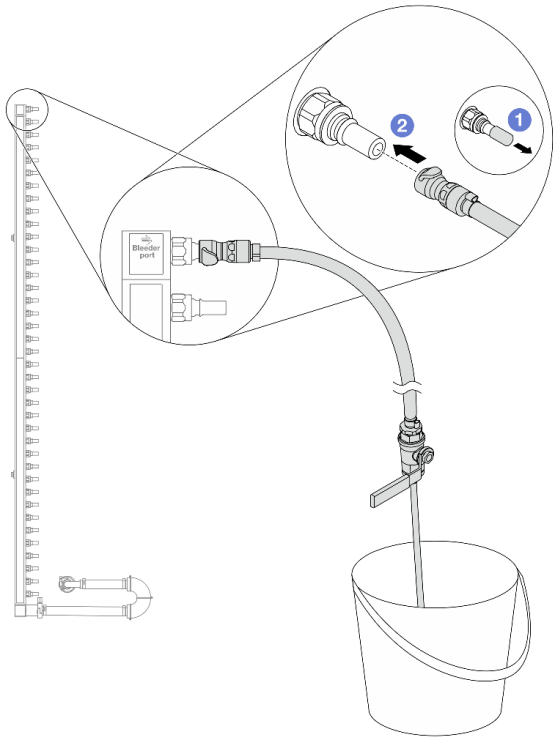

Figure 180. Installing the bleeder kit to the supply side

a. 1 Remove the rubber quick connect plug covers from the ports on the manifold.

b. 2 Plug the bleeder kit to the manifold.

Step 9. Slowly open the bleeder valve to allow a steady stream of coolant to drain. Close the bleeder valve once coolant stops flowing.

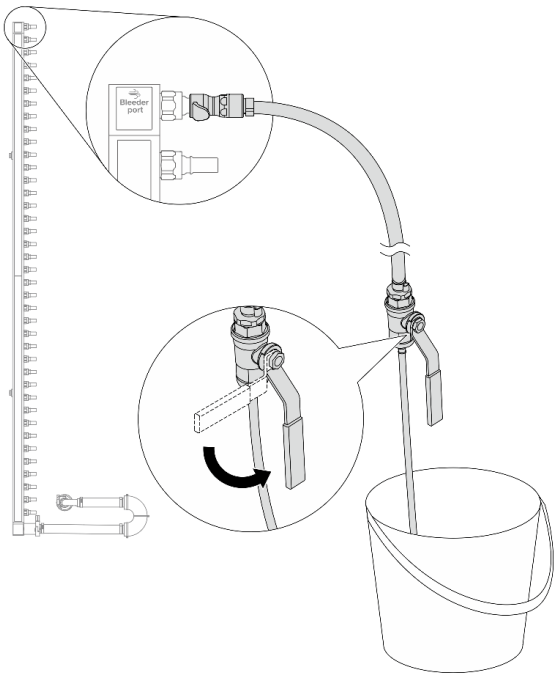

Figure 181. Opening the bleeder valve

Step 10. Install the bleeder kit to the manifold return side.

Note: This step drains the liquid with the help of a pressure difference inside and outside the return manifold.

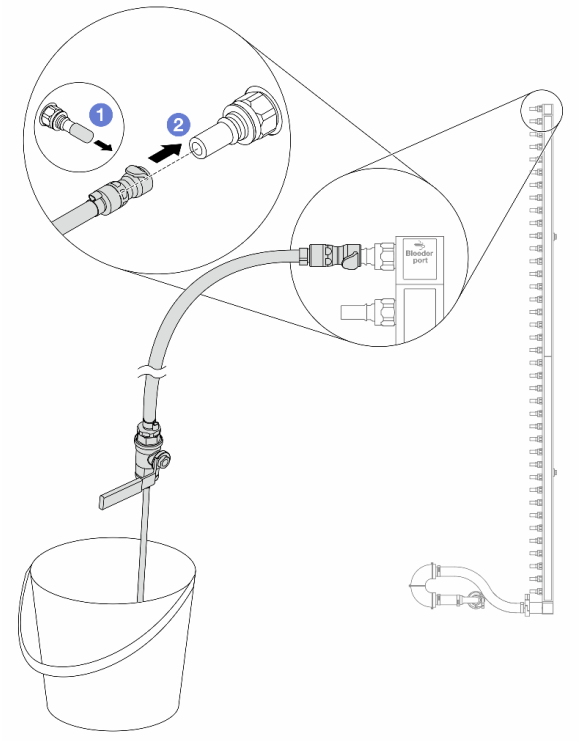

Figure 182. Installing the bleeder kit to the return side

a. 1 Remove the rubber quick connect plug covers from the ports on the manifold.

b. 2 Plug the bleeder kit to the manifold.

Step 11. Slowly open the bleeder valve to allow a steady stream of coolant to drain. Close the bleeder valve once coolant stops flowing.

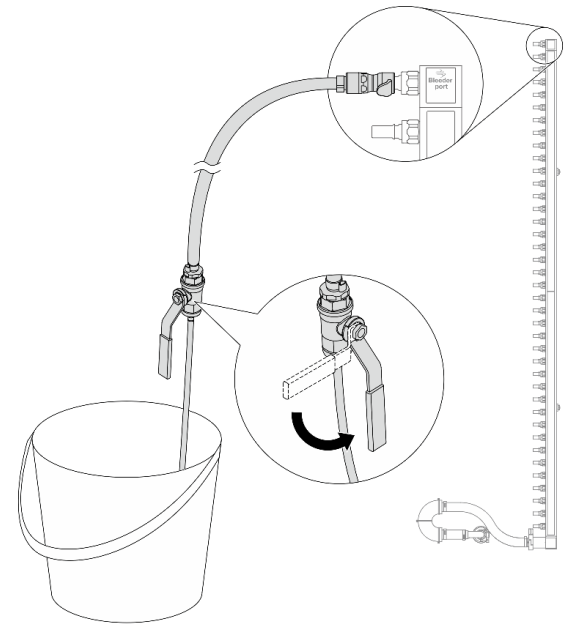

Figure 183. Opening the bleeder valve

Step 12. Separate the return manifold from the connection set in a dry and clean work area, and keep a bucket and absorbent cloths around to collect any liquid that may drain out.

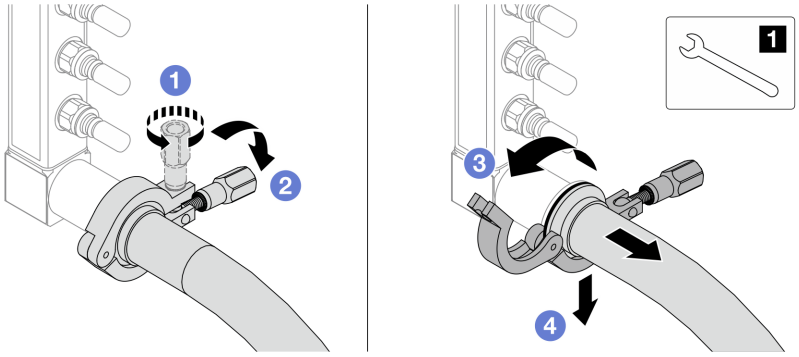

Figure 184. Separating the manifold from the connection set

1 17 mm wrench

a. 1 Loosen the screw that locks the ferrule.
b. 2 Put the screw down.
c. 3 Open the clamp.
d. 4 Remove the ferrule and connection set from the manifold.

Step 13. Repeat Step 12 on page 176 to the supply manifold.

Step 14. For better sanitation, keep the manifold ports and connection sets dry and clean. Re-install quick connect plug covers or any covers that protect connection sets and manifold ports.

Step 15. To remove the server from the rack, see “Server replacement” on page 34.

Step 16. To remove the Processor Neptune Core Module or Compute Complex Neptune Core Module, see “Remove the Lenovo Processor Neptune Core Module” on page 130 or Remove the Lenovo Compute Complex Neptune Core Module.

After you finish

If you are instructed to return the component or optional device, follow all packaging instructions, and use any packaging materials for shipping that are supplied to you.

Install the manifold (in-rack system)

Follow the instructions to install the manifold in an in-rack direct water cooling system.

About this task

Important: This task must be operated by trained technicians that are certified by Lenovo Service. Do not attempt to remove or install the part without proper training and qualification.

CAUTION:
The liquid might cause irritation to the skin and eyes. Avoid direct contact with the liquid.

S002

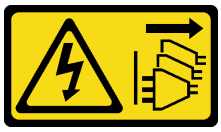

CAUTION:
The power-control button on the device and the power switch on the power supply do not turn off the electrical current supplied to the device. The device also might have more than one power cord. To remove all electrical current from the device, ensure that all power cords are disconnected from the power source.

S011



CAUTION:
Sharp edges, corners, or joints nearby.

S038



CAUTION:
Eye protection should be worn for this procedure.

S040



CAUTION:
Protective gloves should be worn for this procedure.

S042



DANGER

Risk of electric shock due to water or a water solution which is present in this product. Avoid working on or near energized equipment with wet hands or when spilled water is present.

Attention:

- Read “Installation Guidelines” on page 1 and “Safety inspection checklist” on page 2 to ensure that you work safely.
- Power off the server and peripheral devices and disconnect the power cords and all external cables. See “Power off the server” on page 27.
- Prevent exposure to static electricity, which might lead to system halt and loss of data, by keeping static-sensitive components in their static-protective packages until installation, and handling these devices with an electrostatic-discharge wrist strap or other grounding system.
- Ensure proper handling procedures are followed when working with any chemically treated liquid used in the rack cooling system. Ensure that material safety data sheets (MSDS) and safety information are provided by the liquid chemical treatment supplier and that proper personal protective equipment (PPE) is available as recommended by the liquid chemical treatment supplier. Protective gloves and eyewear may be recommended as a precaution.
- This task requires two or more people.

Procedure

Note: Your server may differ from that shown in the illustrations, but the procedure is the same.

Step 1. Make sure that the in-rack CDU and other devices are not powered on, and that all external cables are disconnected.

Step 2. To install the Processor Neptune Core Module or Compute Complex Neptune Core Module, see “Install the Lenovo Processor Neptune Core Module” on page 134 or Install the Lenovo Compute Complex Neptune Core Module.

Step 3. To install the server into the rack, see “Install the server to the rack (friction rails)” on page 38 or “Install the server to the rack (slide rails)” on page 46.

Step 4. Install the manifold.

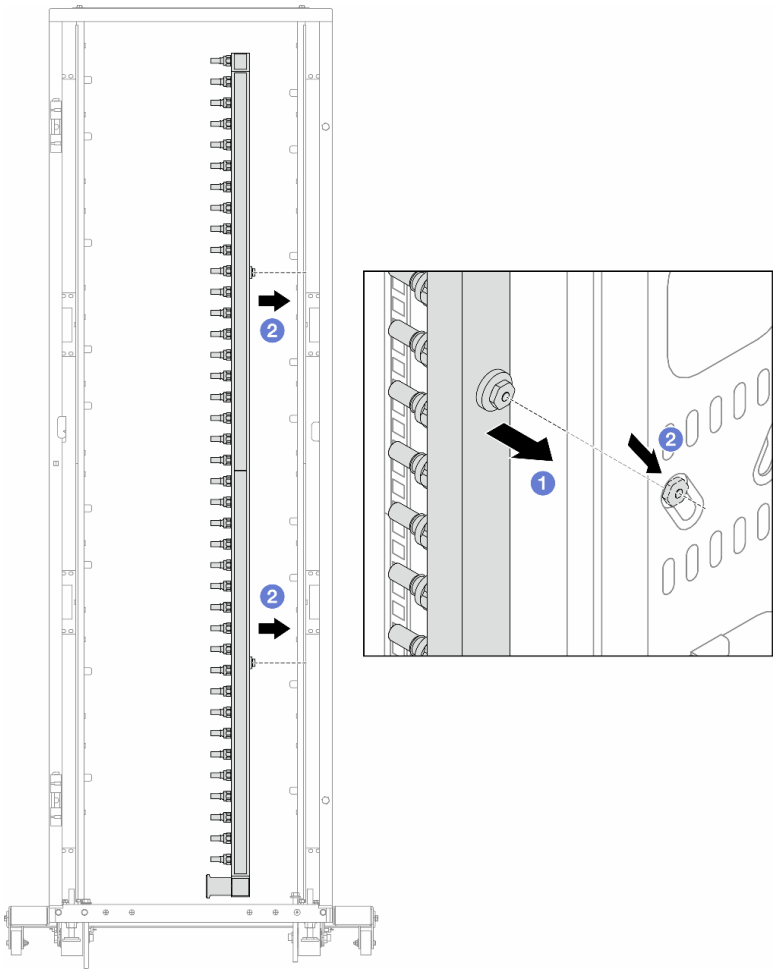

Figure 185. Installing the manifold

a. (1) Hold the manifold with both hands, and mount it onto the rack cabinet.

b. (2) Align the spools with holes, and clutch the cabinet.

Note: For more information about the rack cabinet, see ThinkSystem Heavy Duty Full Depth Rack Cabinets User Guide.

Step 5. Repeat Step 4 on page 178 to the other manifold.

Step 6. Separate ball valves from connection sets.

Note: One end of a connection set comes with a detachable ball valve, and the two parts are connected by a ferrule. Remove the ferrule to separate the ball valve that is bound for CDU in Step 7 on page 180.

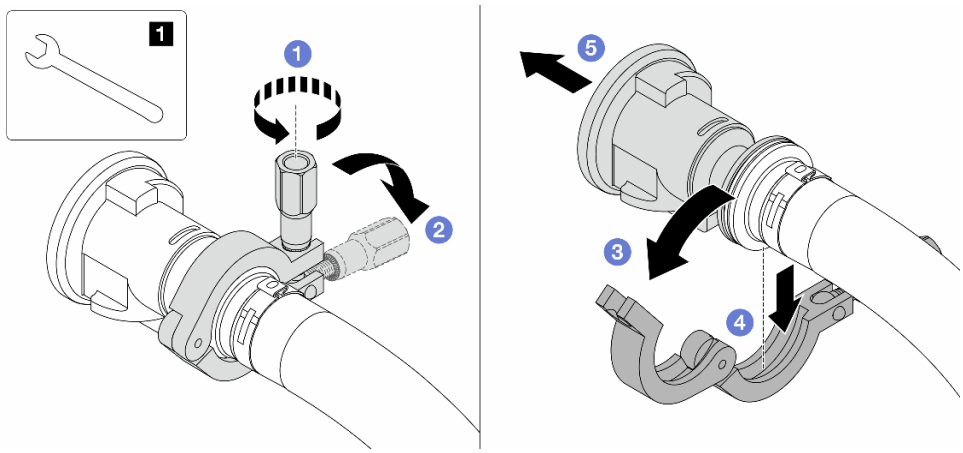

Figure 186. Separating ball valves

1	17 mm wrench

a. 1 Loosen the screw that locks the ferrule.
b. 2 Put the screw down.
c. 3 Open the clamp.
d. 4 Remove the ferrule.
e. 5 Remove the ball valve from connection set.

Step 7. Install ball valves to CDU.

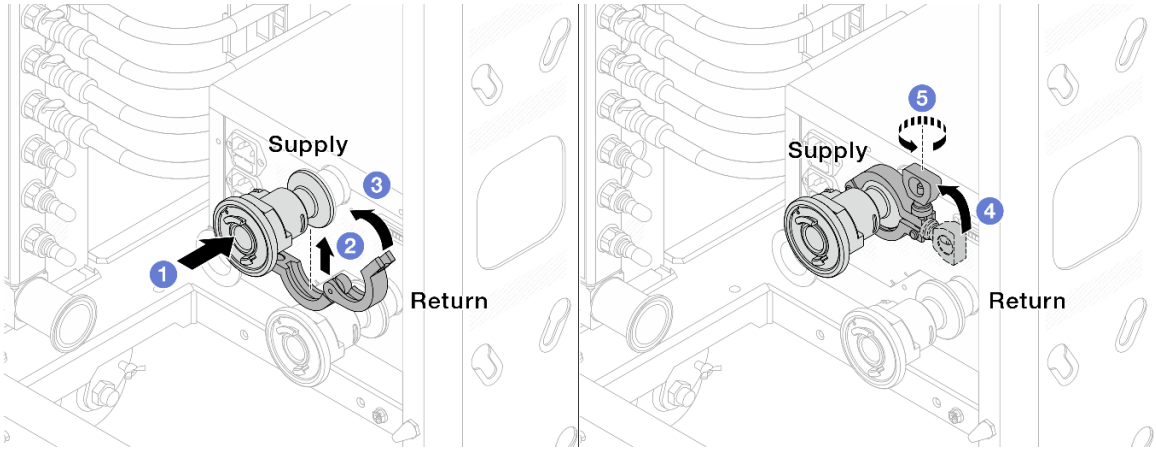

Figure 187. Installing ball valves

a. 1 Connect the ball valves to **Supply** and **Return** ports.
b. 2 Wrap the interface around with the clamp.
c. 3 Close the clamp.
d. 4 Lift the screw upright.
e. 5 Tighten the screw and make sure that it is secured.

Step 8. Install the connection set to manifolds.

Note: Install the supply side first, then install the return side.

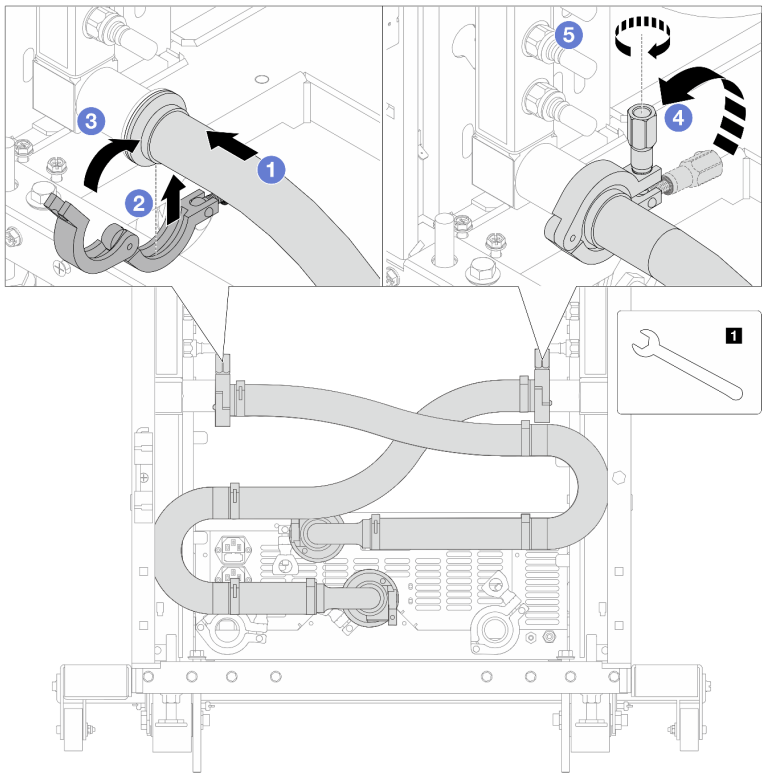

Figure 188. Installing the connection set

1 17 mm wrench

a. 1 Connect the connection set to both manifolds.
b. 2 Wrap the interface around with the clamp.
c. 3 Close the clamp.
d. 4 Lift the screw upright.
e. 5 Tighten the screw and make sure that it is secured.

Step 9. Install the connection set to ball valves.

Note: Install the supply side first, then install the return side.

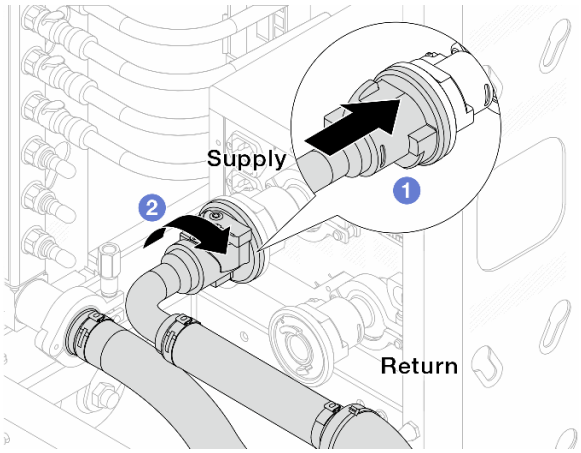

Figure 189. Connecting ball valves

a. 1 Connect ball valves.
b. 2 Rotate to the right to lock the two valves.

Step 10. Prepare the in-rack CDU.

a. Connect the feed hose to inlet port on the front.

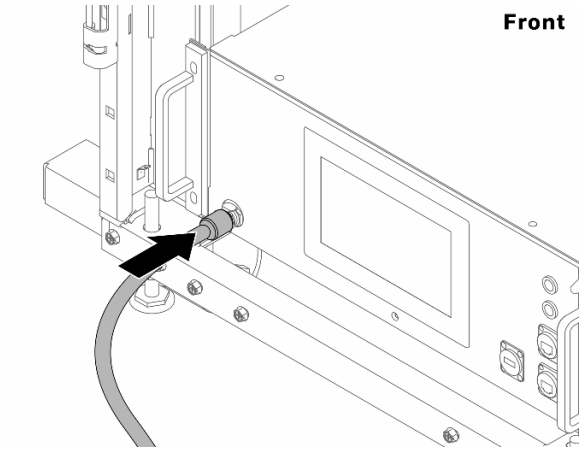

Figure 190. The front of CDU

b. Connect hoses to the drain port and bleeder port on the rear.

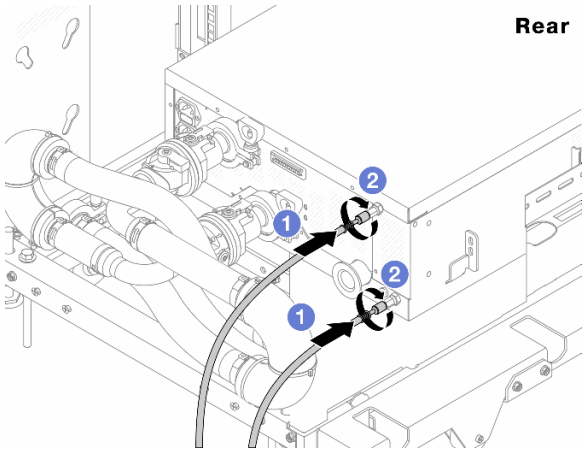

Figure 191. The rear of CDU

1. Connect both drain and bleeder hoses to CDU.
2. Rotate the connectors to the right to secure the connection.

Important:

- For more operation and maintenance guidelines, see Lenovo Neptune DWC RM100 in-rack liquid Distribution Unit (CDU) Operation & Maintenance Guide.
- For service support, associated warranty and maintenance sizing, contact Lenovo Professional Services team at cdusupport@lenovo.com.

Step 11. Install the quick connect plug to the manifolds.

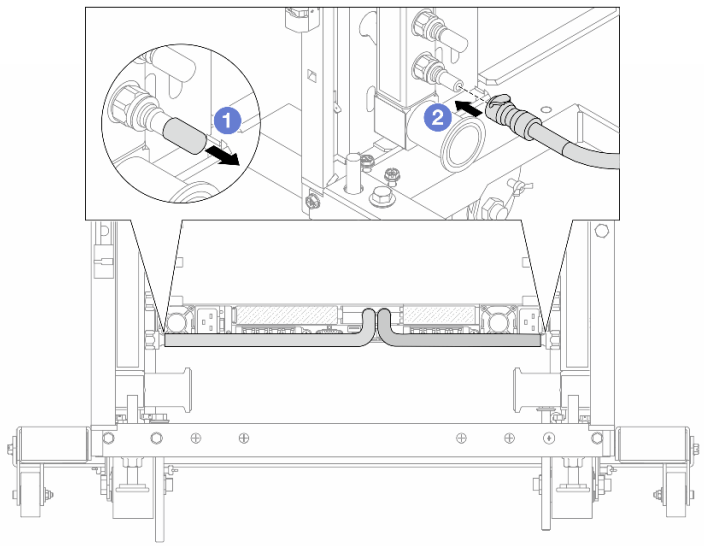

Figure 192. Installing the quick connect plug

a. 1 Remove the rubber quick connect plug covers from the ports on the manifold.

b. 2 Connect the plug to the manifold port.

Step 12. Install the bleeder kit to the manifold supply side.

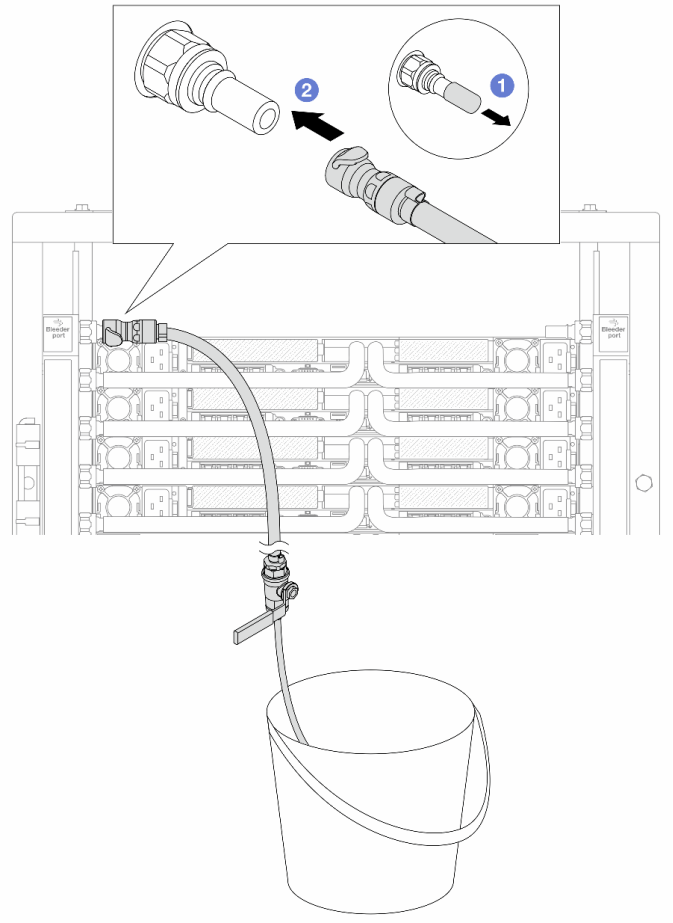

Figure 193. Installing the bleeder kit to the supply side

a. 1 Remove the rubber quick connect plug covers from the ports on the manifold.

b. 2 Plug the bleeder kit to the manifold.

Step 13. To push the air out of the manifolds, open ball valve switches to let liquid fill the system.

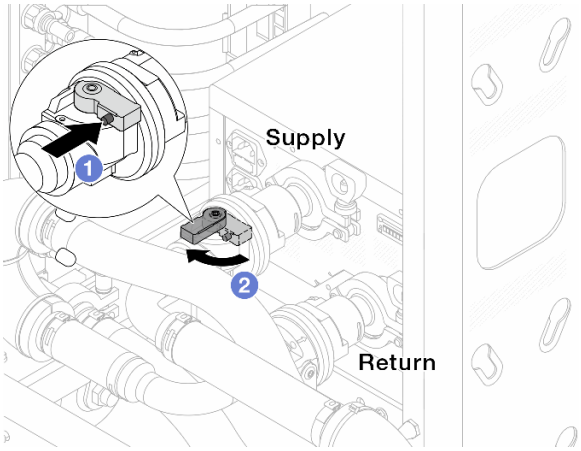

Figure 194. Opening ball valves

a. 1 Press the button on the ball valve switch.

b. (2) Rotate the switch to fully open the valves as illustrated above.

Attention:

- Pay close attention to the front display of CDU and maintain the system pressure at **one bar**.
- For more information about liquid temperature and system pressure requirements, see "Water requirements" on page 355.

Step 14. Slowly open the bleeder valve to conduct the air out of the hose. Close the bleeder valve once a steady stream of water flows into the bucket or there are only minimal bubbles in the bleeder hose.

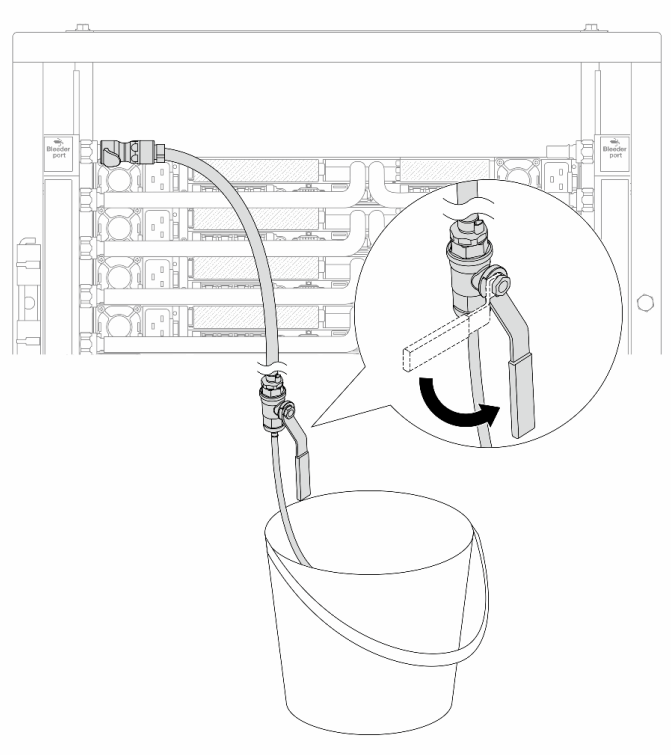

Figure 195. Opening the bleeder valve on the supply side

Step 15. Install the bleeder kit to the manifold return side.

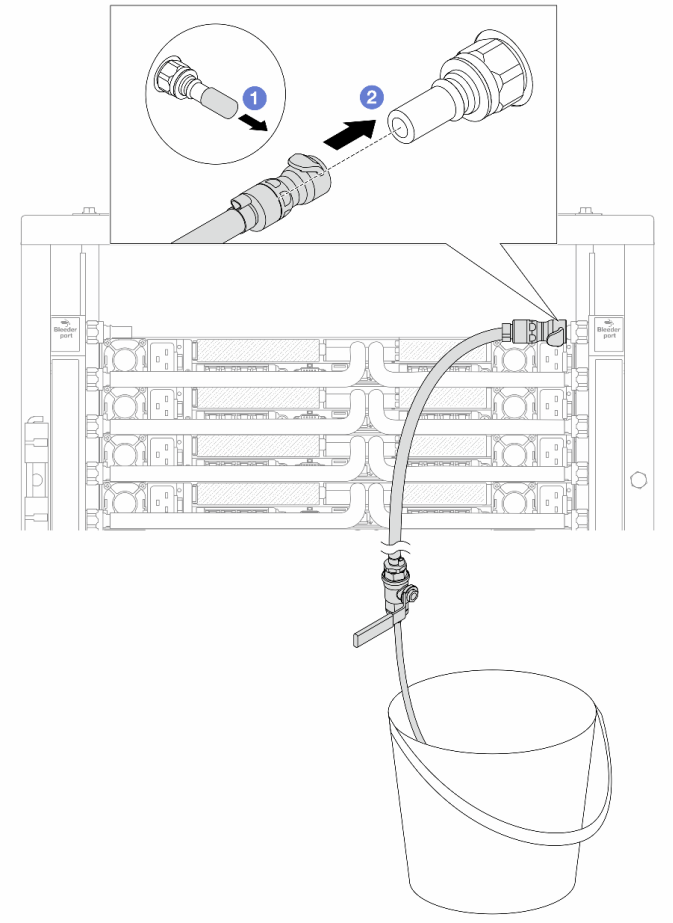

Figure 196. Installing the bleeder kit on the return side

a. 1 Remove the rubber quick connect plug covers from the ports on the manifold.

b. 2 Plug the bleeder kit to the manifold.

Step 16. Slowly open the bleeder valve to conduct the air out of the hose. Close the bleeder valve once a steady stream of water flows into the bucket or there are only minimal bubbles in the bleeder hose.

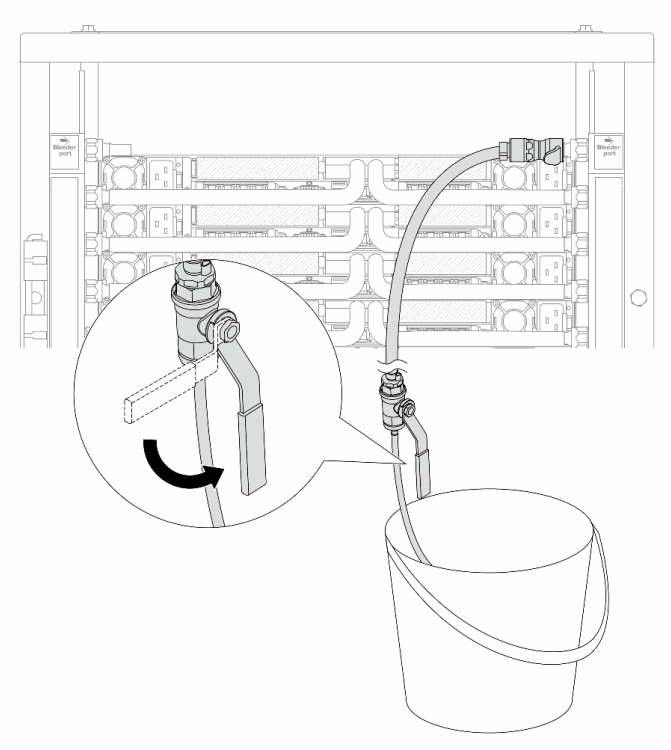

Figure 197. Opening the bleeder valve on the return side

Step 17. (For precaution) To make sure that the air inside is as little as possible, re-install the bleeder kit back to manifold supply side and do it one more time. Close the bleeder valve once a steady stream of water flows into the bucket or there are only minimal bubbles in the bleeder hose.

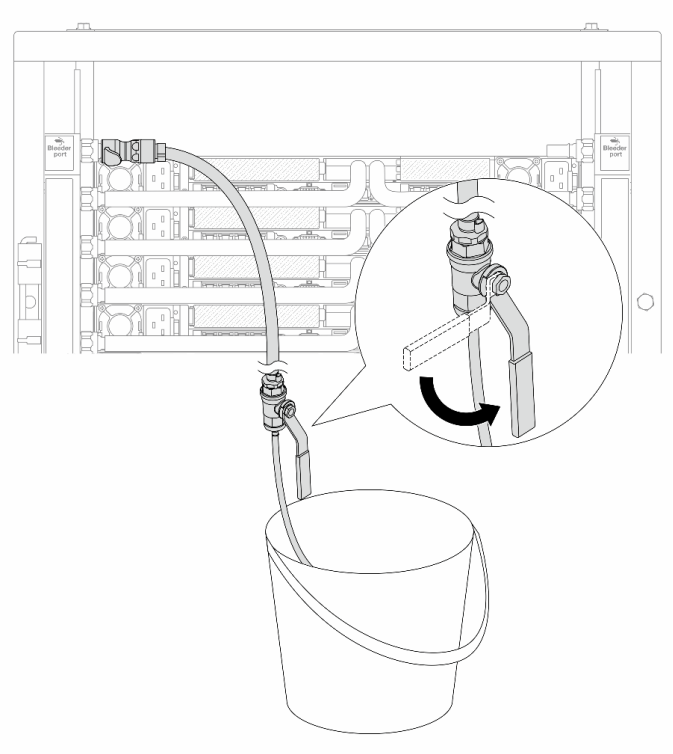

Figure 198. Opening the bleeder valve on the supply side

Step 18. Once completed, pay close attention to the front display of CDU and maintain the system pressure at **one bar**. For more information about liquid temperature and system pressure requirements, see "Water requirements" on page 355.

After you finish

Complete the parts replacement. See "Complete the parts replacement" on page 341.

Remove the manifold (in-row system)

Follow the instructions to remove the manifold in an in-row direct water cooling system.

About this task

Important: This task must be operated by trained technicians that are certified by Lenovo Service. Do not attempt to remove or install the part without proper training and qualification.

CAUTION:
The liquid might cause irritation to the skin and eyes. Avoid direct contact with the liquid.

S002

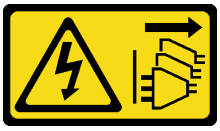

CAUTION:

The power-control button on the device and the power switch on the power supply do not turn off the electrical current supplied to the device. The device also might have more than one power cord. To remove all electrical current from the device, ensure that all power cords are disconnected from the power source.

S011



CAUTION:
Sharp edges, corners, or joints nearby.

S038



CAUTION:
Eye protection should be worn for this procedure.

S040



CAUTION:
Protective gloves should be worn for this procedure.

S042



DANGER

Risk of electric shock due to water or a water solution which is present in this product. Avoid working on or near energized equipment with wet hands or when spilled water is present.

Attention:

- Read “Installation Guidelines” on page 1 and “Safety inspection checklist” on page 2 to ensure that you work safely.
- Power off the server and peripheral devices and disconnect the power cords and all external cables. See “Power off the server” on page 27.

- Prevent exposure to static electricity, which might lead to system halt and loss of data, by keeping static-sensitive components in their static-protective packages until installation, and handling these devices with an electrostatic-discharge wrist strap or other grounding system.
- Ensure proper handling procedures are followed when working with any chemically treated liquid used in the rack cooling system. Ensure that material safety data sheets (MSDS) and safety information are provided by the liquid chemical treatment supplier and that proper personal protective equipment (PPE) is available as recommended by the liquid chemical treatment supplier. Protective gloves and eyewear may be recommended as a precaution.
- This task requires two or more people.

Procedure

Note: Your server may differ from that shown in the illustrations, but the procedure is the same.

Step 1. Close both ball valves.

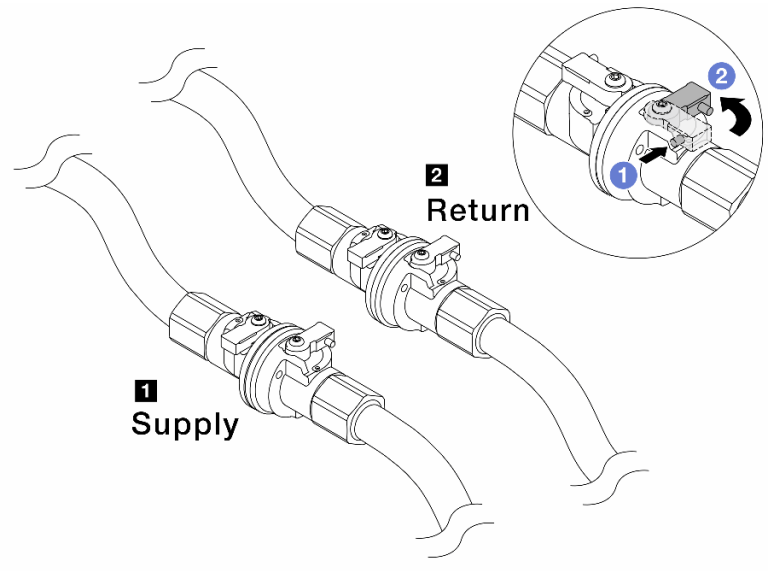

Figure 199. Closing ball valves

Note:

1 Manifold supply connects to facility supply	**2 Manifold return connects to facility return**

a. 1 Press the button on the ball valve switch.

b. 2 Rotate the switches to close the valves as illustrated above.

Step 2. Remove the quick connect plugs to separate the hoses of Processor Neptune Core Module or Compute Complex Neptune Core Module from the manifold.

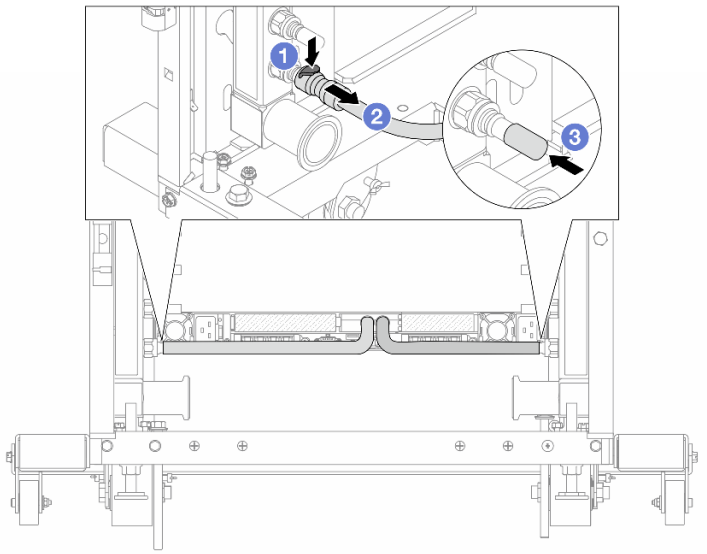

Figure 200. Quick connect plug removal

a. 1 Press the latch down to unlock the hose.
b. 2 Pull the hose off.
c. 3 Re-install the rubber quick connect plug covers to the ports on the manifold.

Step 3. Repeat Step 2 on page 190 to the other manifold.

Step 4. Remove the manifold with the hose kit attached.

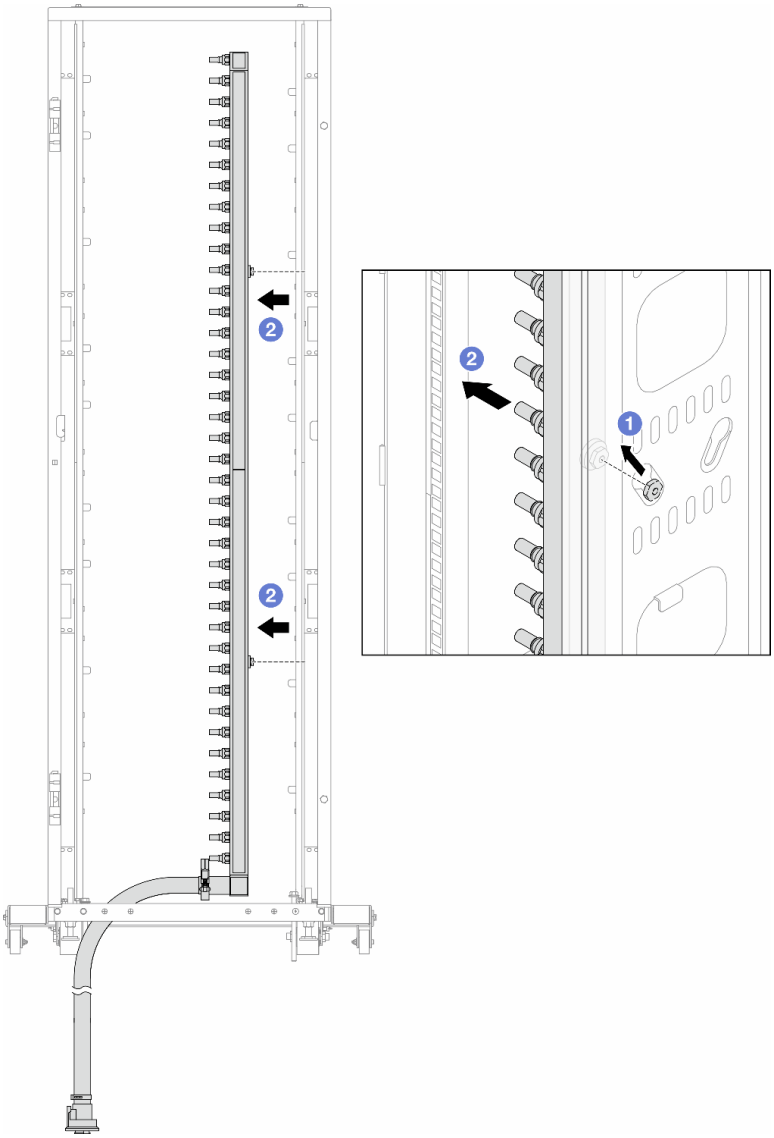

Figure 201. Removing the manifold

a. 1 Hold the manifold with both hands, and lift it upward to relocate the spools from the small openings to large ones on the rack cabinet.

b. 2 Remove the manifold with the hose kit attached.

Step 5. Repeat Step 4 on page 191 to the other manifold.

Notes:

- There is remaining liquid inside the manifold and the hose kit. Remove both together and leave the further draining to the next step.
- For more information about the rack cabinet, see ThinkSystem Heavy Duty Full Depth Rack Cabinets User Guide.

Step 6. Install the bleeder kit to the manifold supply side.

Note: This step drains the liquid with the help of a pressure difference inside and outside the supply manifold.

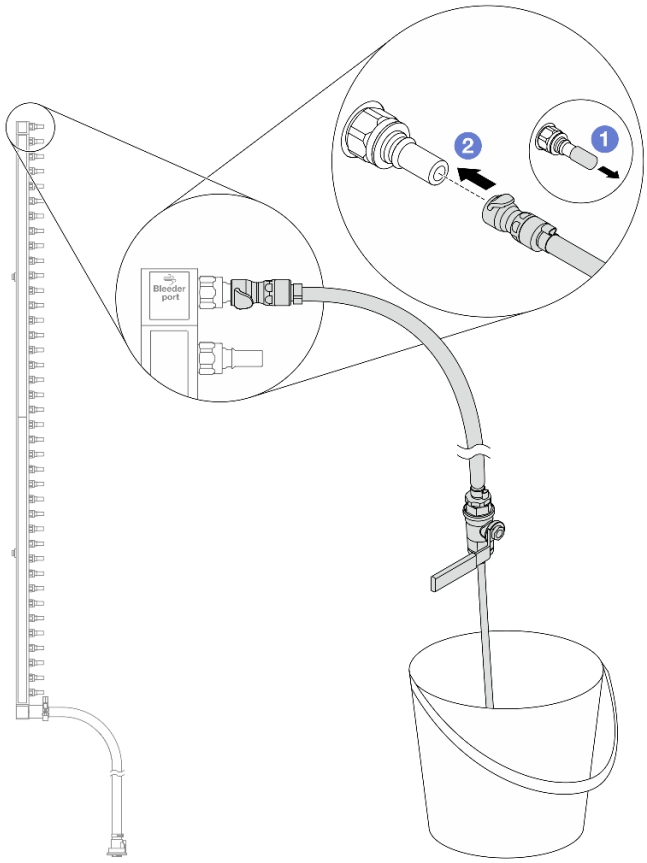

Figure 202. Installing the bleeder kit to the supply side

a. 1 Remove the rubber quick connect plug covers from the ports on the manifold.

b. 2 Plug the bleeder kit to the manifold.

Step 7. Slowly open the bleeder valve to allow a steady stream of coolant to drain. Close the bleeder valve once coolant stops flowing.

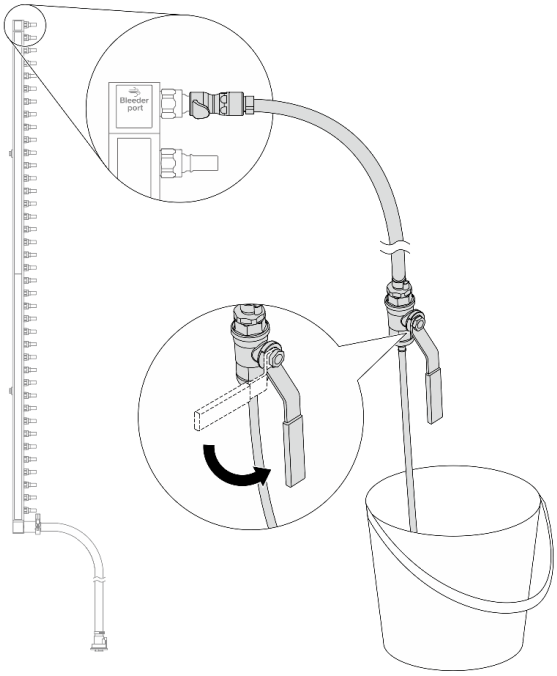

Figure 203. Opening the bleeder valve

Step 8. Install the bleeder kit to the manifold return side.

Note: This step drains the liquid with the help of a pressure difference inside and outside the return manifold.

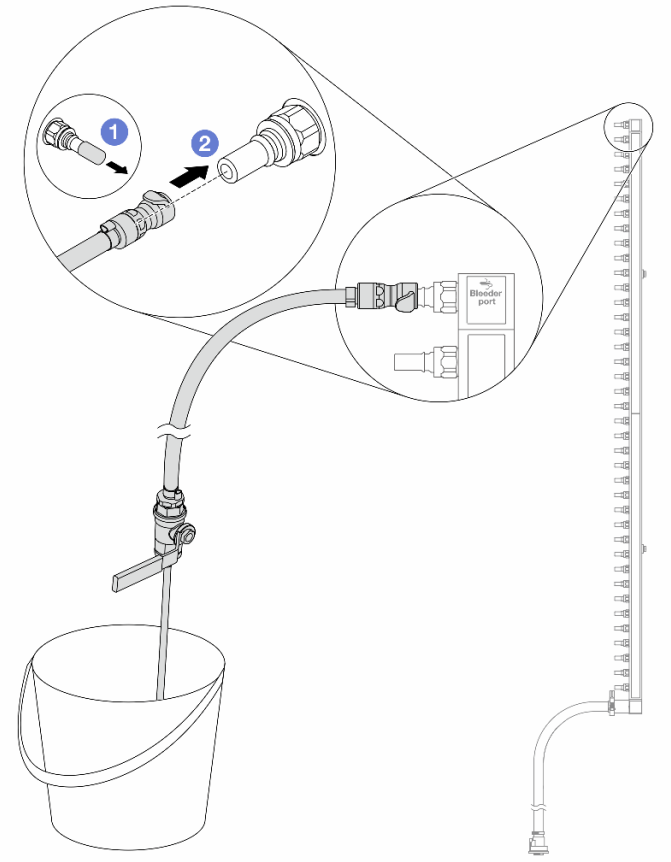

Figure 204. Installing the bleeder kit to the return side

a. 1 Remove the rubber quick connect plug covers from the ports on the manifold.

b. 2 Plug the bleeder kit to the manifold.

Step 9. Slowly open the bleeder valve to allow a steady stream of coolant to drain. Close the bleeder valve once coolant stops flowing.

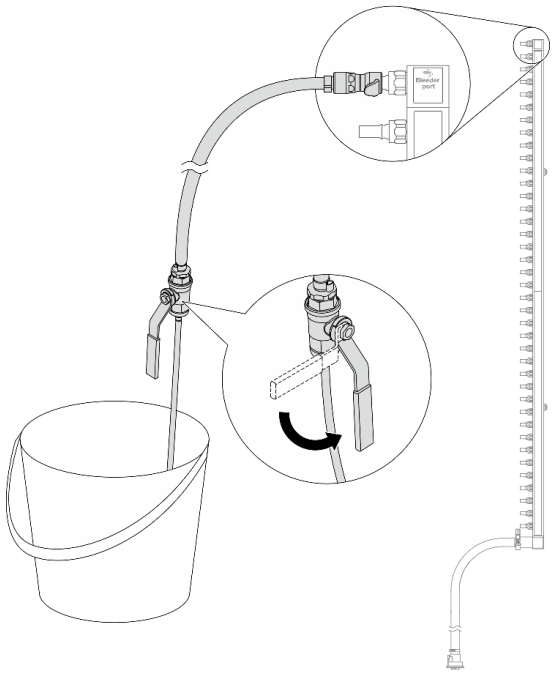

Figure 205. Opening the bleeder valve

Step 10. Separate the manifold from the hose kit in a dry and clean work area, and keep a bucket and absorbent cloths around to collect any liquid that may drain out.

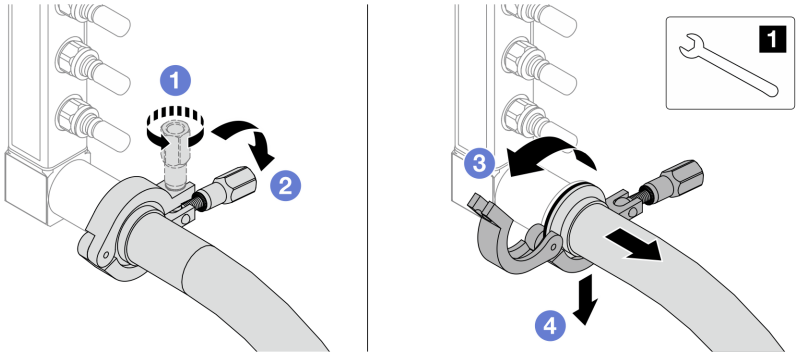

Figure 206. Separating the manifold from the hose kit

1 17 mm wrench

a. 1 Loosen the screw that locks the ferrule.
b. 2 Put the screw down.
c. 3 Open the clamp.
d. 4 Remove the ferrule and hose kit from the manifold.

Step 11. Repeat Step 10 on page 196 to the other manifold.

Step 12. For better sanitation, keep the manifold ports and hose kits dry and clean. Re-install quick connect plug covers or any covers that protect hose kits and manifold ports.

Step 13. To remove the server from the rack, see “Server replacement” on page 34.

Step 14. To remove the Processor Neptune Core Module or Compute Complex Neptune Core Module, see "Remove the Lenovo Processor Neptune Core Module" on page 130 or Remove the Lenovo Compute Complex Neptune Core Module.

After you finish

If you are instructed to return the component or optional device, follow all packaging instructions, and use any packaging materials for shipping that are supplied to you.

Install the manifold (in-row system)

Follow the instructions to install the manifold in an in-row direct water cooling system.

About this task

Important: This task must be operated by trained technicians that are certified by Lenovo Service. Do not attempt to remove or install the part without proper training and qualification.

CAUTION:
The liquid might cause irritation to the skin and eyes. Avoid direct contact with the liquid.

S002



CAUTION:
The power-control button on the device and the power switch on the power supply do not turn off the electrical current supplied to the device. The device also might have more than one power cord. To remove all electrical current from the device, ensure that all power cords are disconnected from the power source.

S011



CAUTION:
Sharp edges, corners, or joints nearby.

S038



CAUTION:
Eye protection should be worn for this procedure.

S040



CAUTION:
Protective gloves should be worn for this procedure.

S042



DANGER

Risk of electric shock due to water or a water solution which is present in this product. Avoid working on or near energized equipment with wet hands or when spilled water is present.

Attention:

- Read "Installation Guidelines" on page 1 and "Safety inspection checklist" on page 2 to ensure that you work safely.
- Power off the server and peripheral devices and disconnect the power cords and all external cables. See "Power off the server" on page 27.
- Prevent exposure to static electricity, which might lead to system halt and loss of data, by keeping static-sensitive components in their static-protective packages until installation, and handling these devices with an electrostatic-discharge wrist strap or other grounding system.
- Ensure proper handling procedures are followed when working with any chemically treated liquid used in the rack cooling system. Ensure that material safety data sheets (MSDS) and safety information are provided by the liquid chemical treatment supplier and that proper personal protective equipment (PPE) is available as recommended by the liquid chemical treatment supplier. Protective gloves and eyewear may be recommended as a precaution.
- This task requires two or more people.

Procedure

Note: Your server may differ from that shown in the illustrations, but the procedure is the same.

Step 1. To install the Processor Neptune Core Module or Compute Complex Neptune Core Module, see "Install the Lenovo Processor Neptune Core Module" on page 134 or Install the Lenovo Compute Complex Neptune Core Module.

Step 2. To install the server into the rack, see "Install the server to the rack (friction rails)" on page 38 or "Install the server to the rack (slide rails)" on page 46.

Step 3. Install the manifold.

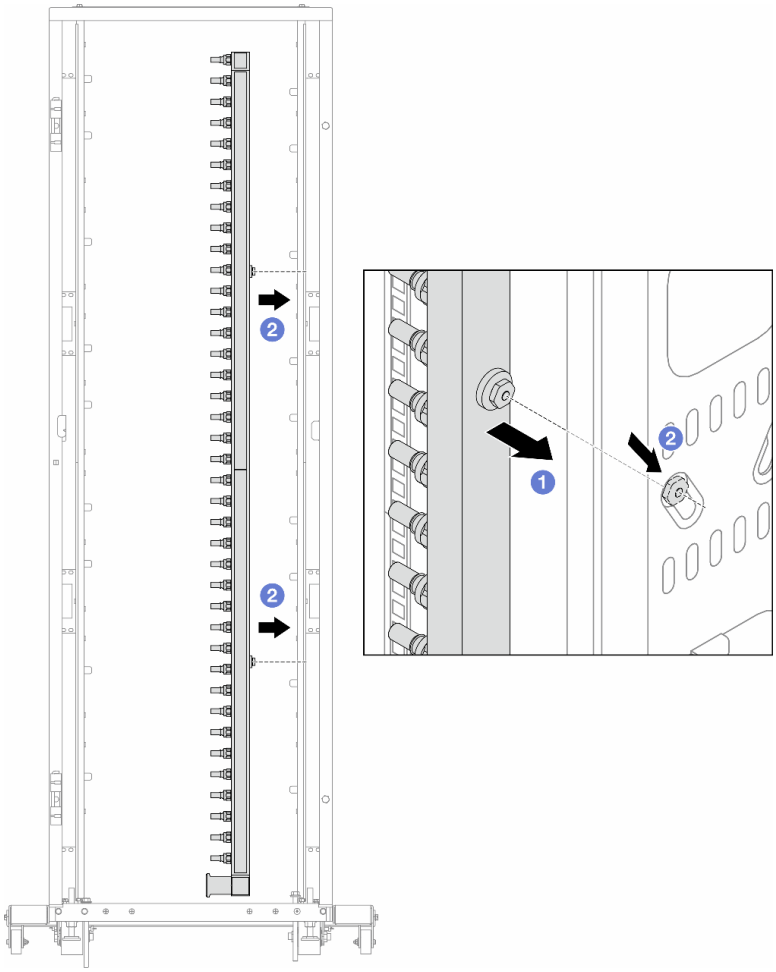

Figure 207. Installing the manifold

a. (1) Hold the manifold with both hands, and mount it onto the rack cabinet.

b. (2) Align the spools with holes, and clutch the cabinet.

Note: For more information about the rack cabinet, see ThinkSystem Heavy Duty Full Depth Rack Cabinets User Guide.

Step 4. Repeat Step 3 on page 198 to the other manifold.

Step 5. Install the quick connect plug to the manifolds.

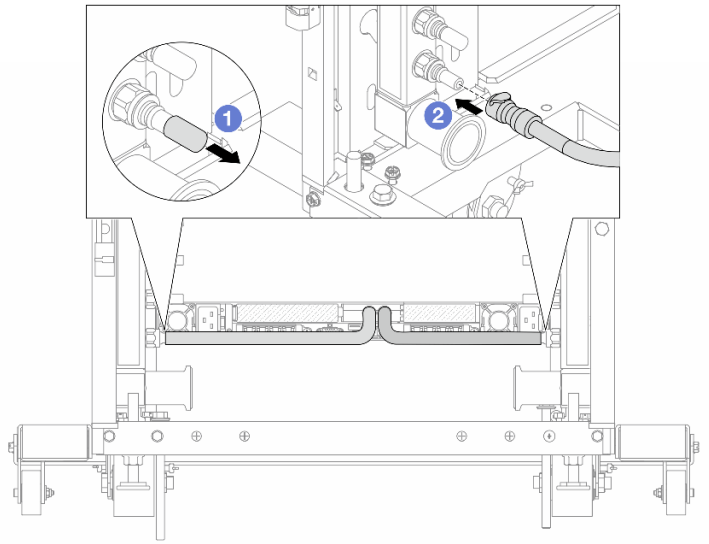

Figure 208. Installing the quick connect plug

a. 1 Remove the rubber quick connect plug covers from the ports on the manifold.

b. 2 Connect the plug to the manifold port.

Step 6. Install the hose kit to the manifold.

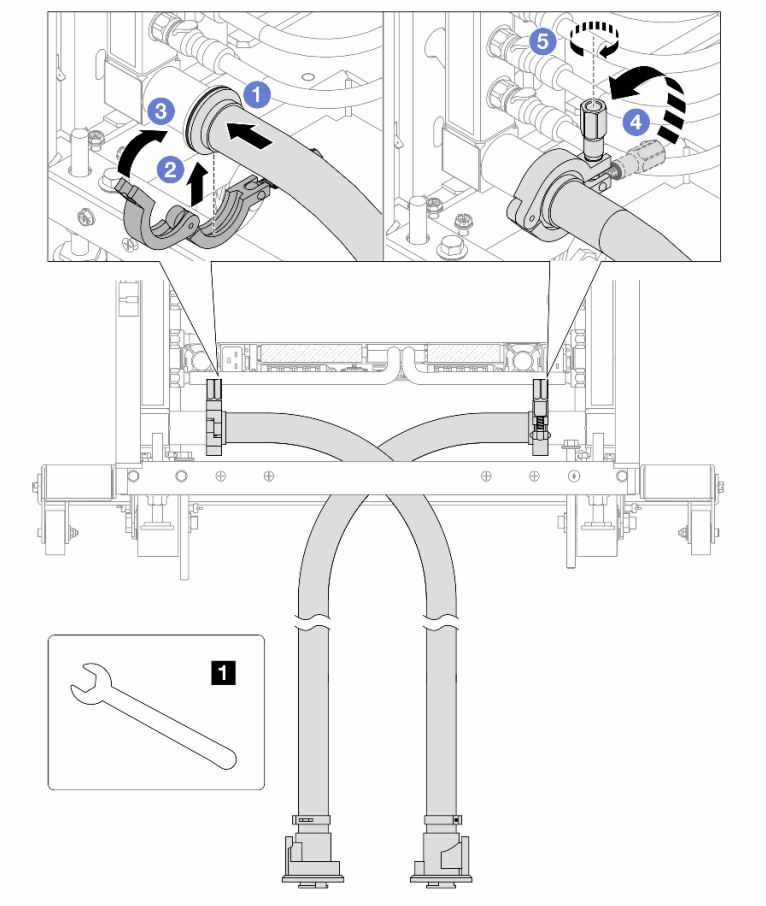

Figure 209. Installing the hose kit

1	17 mm wrench

a. 1 Connect the hose kits to both manifolds.
b. 2 Wrap the interface around with the clamp.
c. 3 Close the clamp.
d. 4 Lift the screw upright.
e. 5 Tighten the screw and make sure that it is secured.

Step 7. Install the bleeder kit to the manifold supply side.

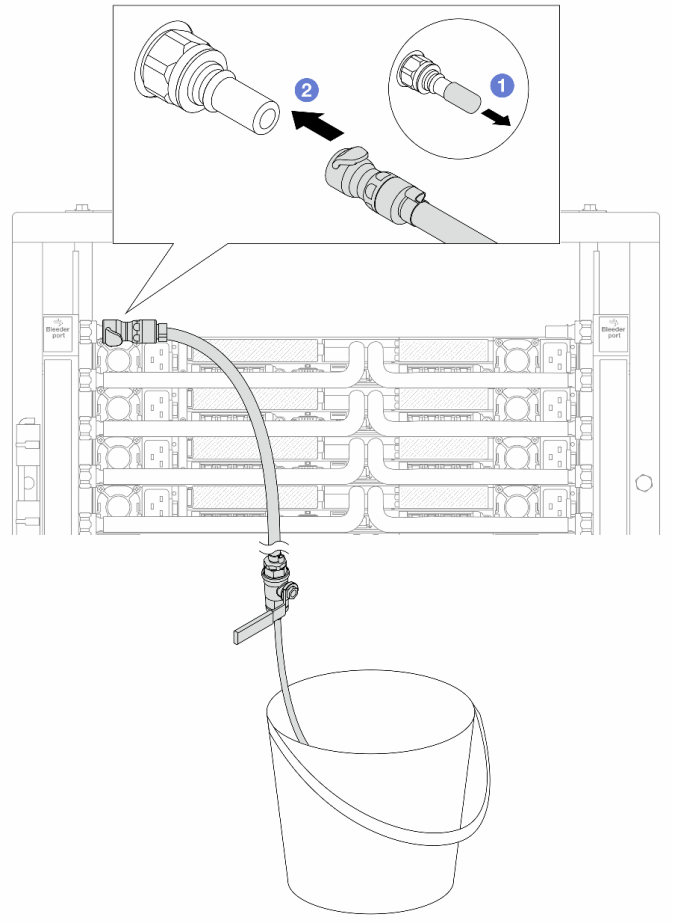

Figure 210. Installing the bleeder kit to the supply side

a. 1 Remove the rubber quick connect plug covers from the ports on the manifold.

b. 2 Plug the bleeder kit to the manifold.

Step 8. To push the air out of the manifold supply side, connect **facility supply** to **manifold return**.

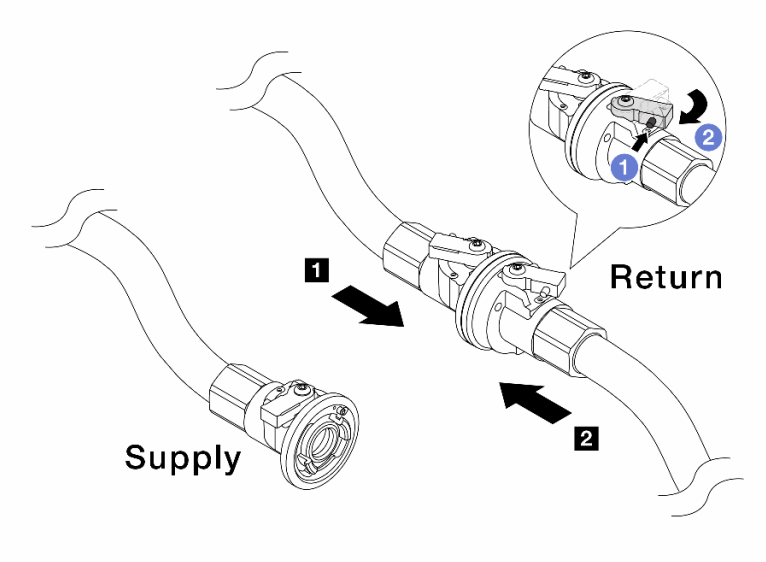

Figure 211. Facility supply to manifold return

a. 1 Press the button on the ball valve switch.

b. 2 Rotate both switches open and stop at around 1/4 of 90 degrees.

Attention:

- Open the ball valves on 1 manifold return side and 2 facility supply side, while keep manifold supply side closed.
- Do not fully open the ball valves, or the water flow gets too rapid to contain.

Step 9. Slowly open the bleeder valve to conduct the air out of the hose. Close the bleeder valve once a steady stream of water flows into the bucket or there are only minimal bubbles in the bleeder hose.

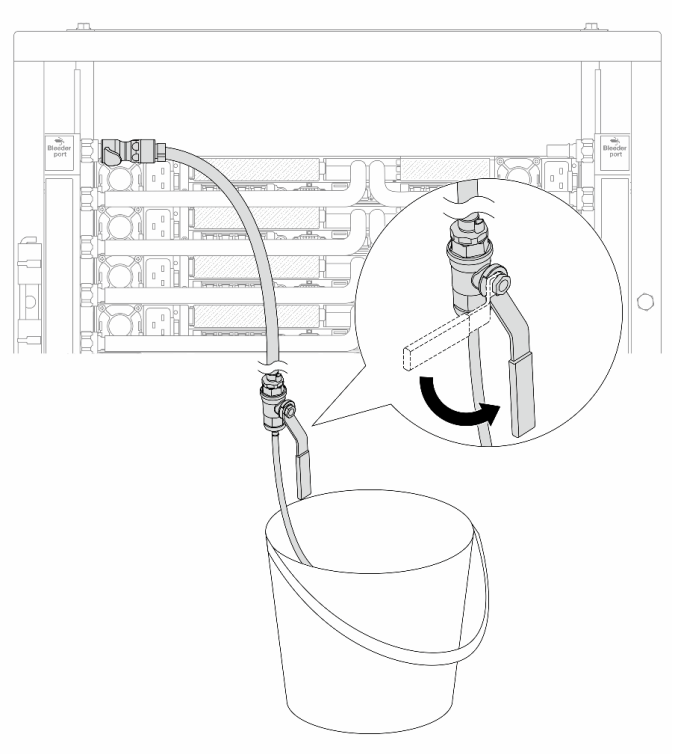

Figure 212. Opening the bleeder valve on the supply side

Step 10. Install the bleeder kit to the manifold return side.

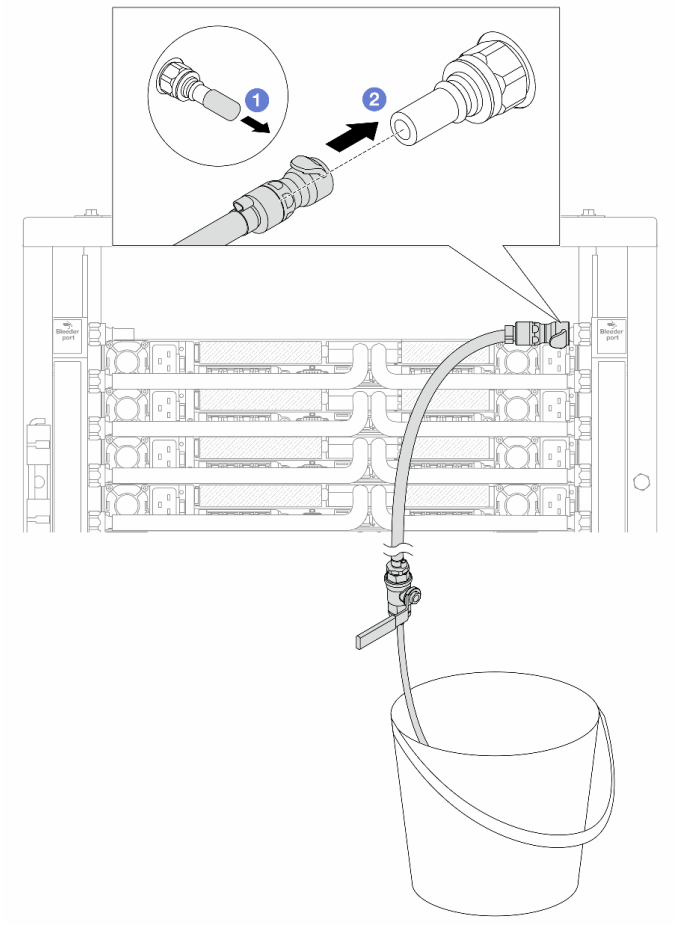

Figure 213. Installing the bleeder kit on the return side

a. 1 Remove the rubber quick connect plug covers from the ports on the manifold.

b. 2 Plug the bleeder kit to the manifold.

Step 11. To push the air out of the manifold return side, connect **facility supply** to **manifold supply**.

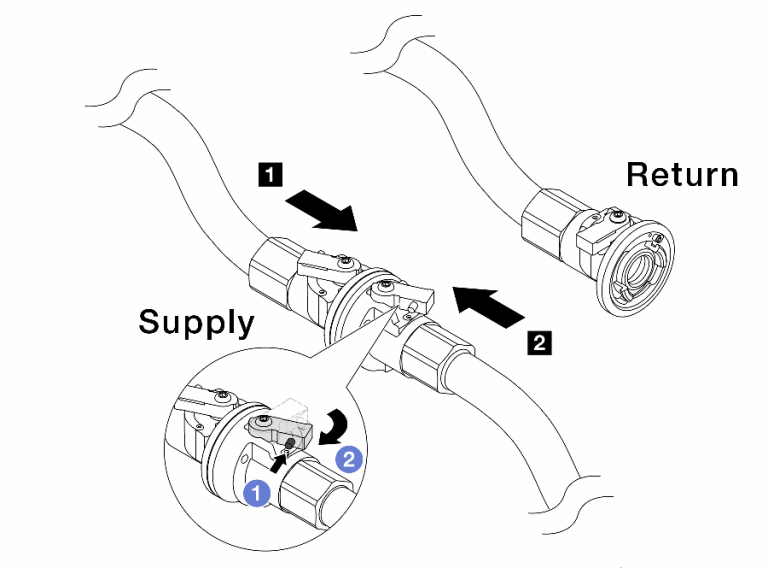

Figure 214. Facility supply to manifold supply

a. 1 Press the button on the ball valve switch.

b. 2 Rotate both switches open and stop at around 1/4 of 90 degrees.

Attention:

- Open the ball valves on 1 manifold supply side and 2 facility supply side, while keep manifold return side closed.
- Do not fully open the ball valves, or the water flow gets too rapid to contain.

Step 12. Slowly open the bleeder valve to conduct the air out of the hose. Close the bleeder valve once a steady stream of water flows into the bucket or there are only minimal bubbles in the bleeder hose.

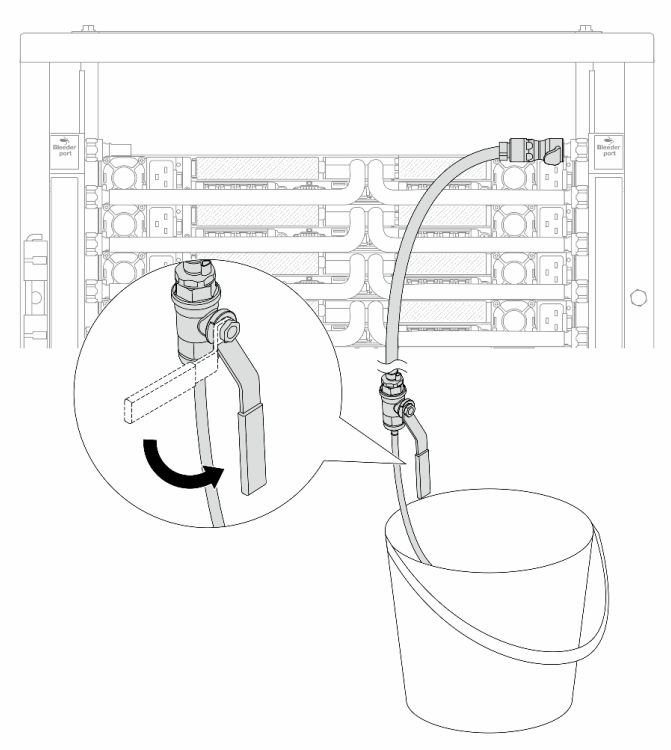

Figure 215. Opening the bleeder valve on the return side

Step 13. (For precaution) To make sure that the air inside is as little as possible, re-install the bleeder kit back to manifold supply side and do it one more time. Close the bleeder valve once a steady stream of water flows into the bucket or there are only minimal bubbles in the bleeder hose.

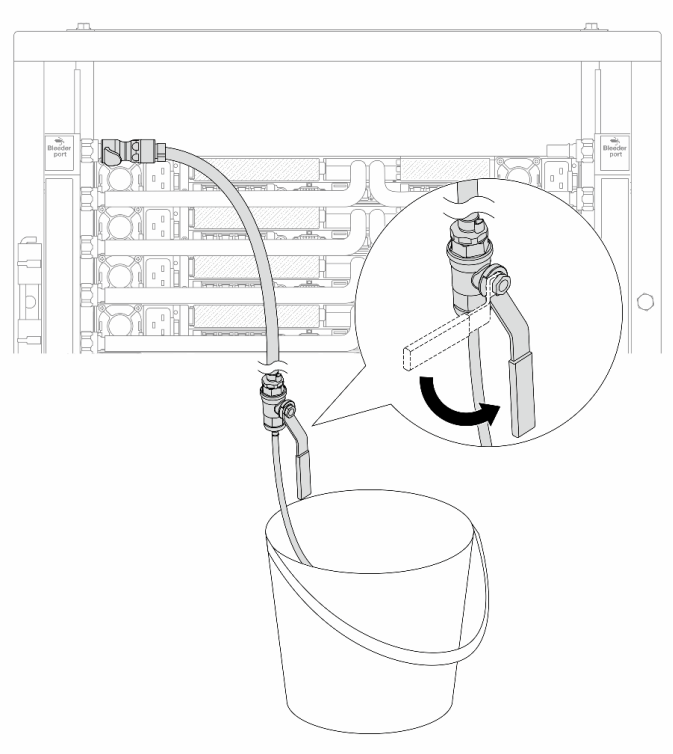

Figure 216. Opening the bleeder valve on the supply side

Step 14. Once completed, connect the supply and return of manifold and facility correspondingly. Fully open all connections on both supply and return sides.

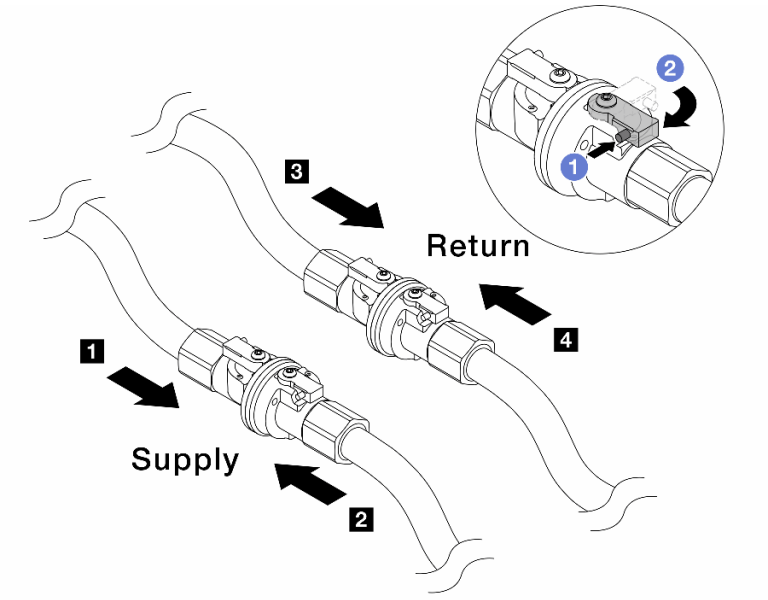

Figure 217. Opening ball valves

Note:

1 Manifold supply connects to 2 facility supply	3 Manifold return connects to 4 facility return

a. 1 Press the button on the ball valve switch.

b. 2 Rotate the switch to fully open the valves as illustrated above.

After you finish

Complete the parts replacement. See “Complete the parts replacement” on page 341.

Memory module replacement

Follow the instructions in this section to remove and install a memory module.

- “Remove a memory module” on page 209
- “Install a memory module” on page 212

Remove a memory module

Follow the instructions in this section to remove a memory module.

About this task

Attention:

- Read “Installation Guidelines” on page 1 and “Safety inspection checklist” on page 2 to ensure that you work safely.
- Power off the server and peripheral devices and disconnect the power cords and all external cables. See “Power off the server” on page 27.
- Make sure to remove or install memory module 20 seconds after disconnecting power cords from the system. It allows the system to be completely discharged of electricity and safe for handling memory module.
- Prevent exposure to static electricity, which might lead to system halt and loss of data, by keeping static-sensitive components in their static-protective packages until installation, and handling these devices with an electrostatic-discharge wrist strap or other grounding system.
- If you are not installing a replacement memory module to the same slot, make sure you have memory module filler available.
- Memory modules are sensitive to static discharge and require special handling. Refer to the standard guidelines for “Handling static-sensitive devices” on page 4.
  - Always wear an electrostatic-discharge strap when removing or installing memory modules. Electrostatic-discharge gloves can also be used.
  - Never hold two or more memory modules together so that they do not touch each other. Do not stack memory modules directly on top of each other during storage.
  - Never touch the gold memory module connector contacts or allow these contacts to touch the outside of the memory module connector housing.
  - Handle memory modules with care: never bend, twist, or drop a memory module.
  - Do not use any metal tools (such as jigs or clamps) to handle the memory modules, because the rigid metals may damage the memory modules.
  - Do not insert memory modules while holding packages or passive components, which can cause package cracks or detachment of passive components by the high insertion force.

Important: Remove or install memory modules for one processor at a time.

Procedure

Attention: Make sure to remove or install memory module 20 seconds after disconnecting power cords from the system. It allows the system to be completely discharged of electricity and safe for handling memory module.

Step 1. Power off the server and disconnect all power cords.

Step 2. Remove the top cover. See "Remove the top cover" on page 335.

Step 3. If your server comes with an air baffle or a middle drive cage, remove it. See "Remove the air baffle" on page 54 or Remove the middle drive cage and drive backplane.

Step 4. (Optional) For the Compute Complex Neptune Core Module, remove the memory module brackets.

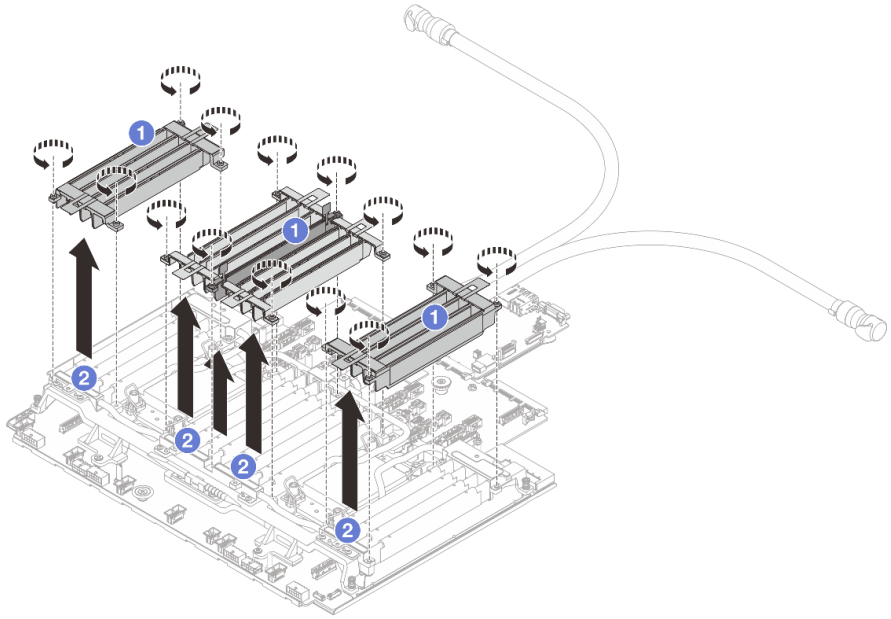

Figure 218. Removing the memory module brackets

a. 1 Loosen the screws on the memory module brackets.

b. 2 Remove the memory module brackets from the processor board.

Notes: Sequence for removing screws and brackets:
- Sequence for loosening screws: 3 > 2 >1
- Sequence for removing brackets: 3 > 2 >1.

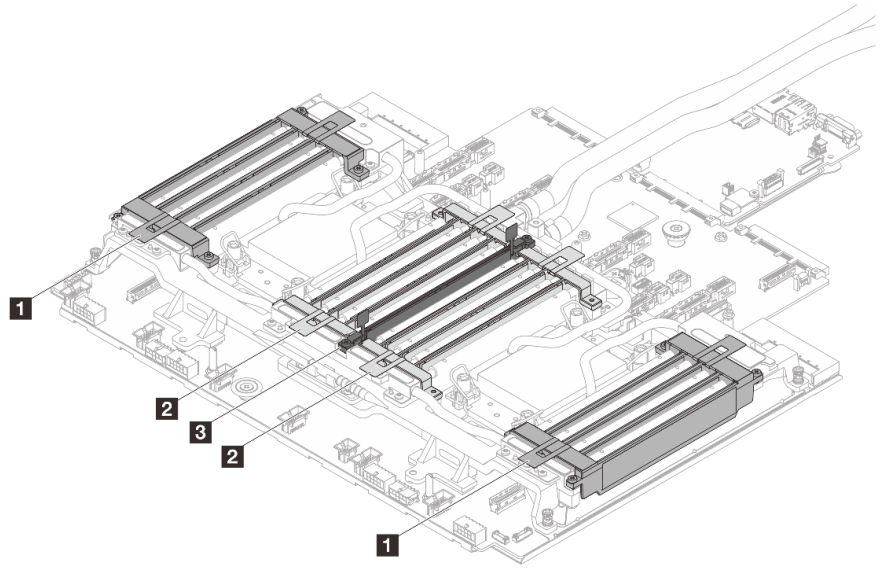

Step 5. Remove the memory module from the slot.

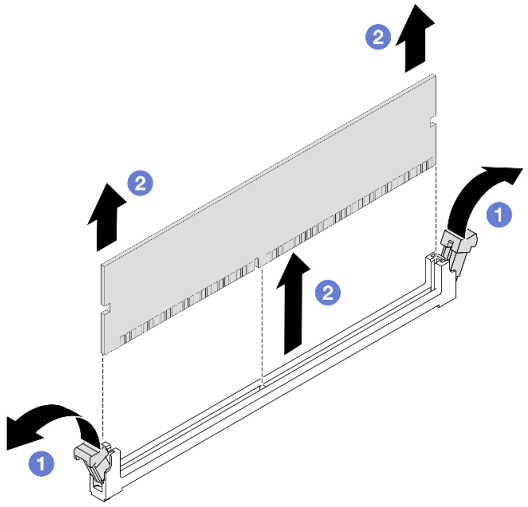

Figure 219. Removing the memory module

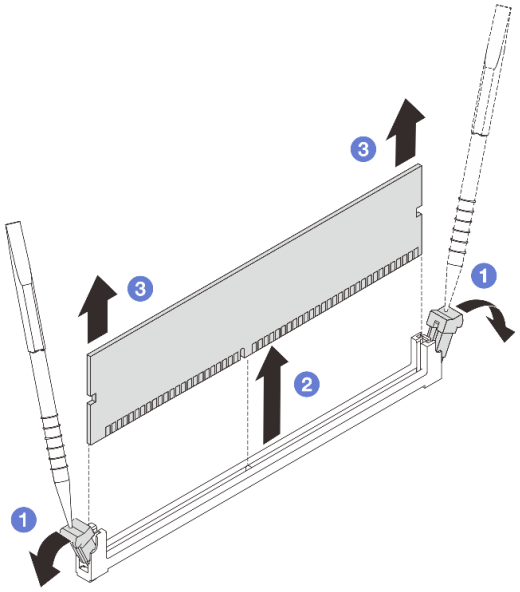

Figure 220. Removing the memory module for Compute Complex Neptune Core Module

a. 1 Open the retaining clip on each end of the memory module slot.

Attention:

- To avoid breaking the retaining clips or damaging memory module slots, handle the clips gently.
- For the Compute Complex Neptune Core Module, use the memory module tool to open the retaining clip.

b. 2 Grasp the memory module at both ends and carefully lift it out of the slot.

After you finish

1. A memory module slot must be installed with a memory module or a memory module filler. See "Install a memory module" on page 212.
2. If you are instructed to return the component or optional device, follow all packaging instructions, and use any packaging materials for shipping that are supplied to you.

Demo video

Watch the procedure on YouTube

Install a memory module

Follow the instructions in this section to install a memory module.

About this task

Attention:

- Read "Installation Guidelines" on page 1 and "Safety inspection checklist" on page 2 to ensure that you work safely.
- Power off the server and peripheral devices and disconnect the power cords and all external cables. See "Power off the server" on page 27.

- Make sure to remove or install memory module 20 seconds after disconnecting power cords from the system. It allows the system to be completely discharged of electricity and safe for handling memory module.
- Prevent exposure to static electricity, which might lead to system halt and loss of data, by keeping static-sensitive components in their static-protective packages until installation, and handling these devices with an electrostatic-discharge wrist strap or other grounding system.
- Make sure to adopt one of the supported configurations listed in "Memory module installation rules and order" on page 5.
- Memory modules are sensitive to static discharge and require special handling. Refer to the standard guidelines at "Handling static-sensitive devices" on page 4:
  - Always wear an electrostatic-discharge strap when removing or installing memory modules. Electrostatic-discharge gloves can also be used.
  - Never hold two or more memory modules together so that they do not touch each other. Do not stack memory modules directly on top of each other during storage.
  - Never touch the gold memory module connector contacts or allow these contacts to touch the outside of the memory module connector housing.
  - Handle memory modules with care: never bend, twist, or drop a memory module.
  - Do not use any metal tools (such as jigs or clamps) to handle the memory modules, because the rigid metals may damage the memory modules.
  - Do not insert memory modules while holding packages or passive components, which can cause package cracks or detachment of passive components by the high insertion force.

Important: Remove or install memory modules for one processor at a time.

Firmware and driver download: You might need to update the firmware or driver after replacing a component.

- Go to https://datacentersupport.lenovo.com/products/servers/thinksystem/sr650v4/downloads/driver-list/ to see the latest firmware and driver updates for your server.
- Go to "Update the firmware" in *User Guide* or *System Configuration Guide* for more information on firmware updating tools.

Procedure

Attention: Make sure to remove or install memory module 20 seconds after disconnecting power cords from the system. It allows the system to be completely discharged of electricity and safe for handling memory module.

Step 1. Power off the server and disconnect all power cords.

Step 2. Locate the required memory module slot on the processor board.

Note: Ensure that you observe the installation rules and sequence in "Memory module installation rules and order" on page 5.

Step 3. Install the memory module into the slot.

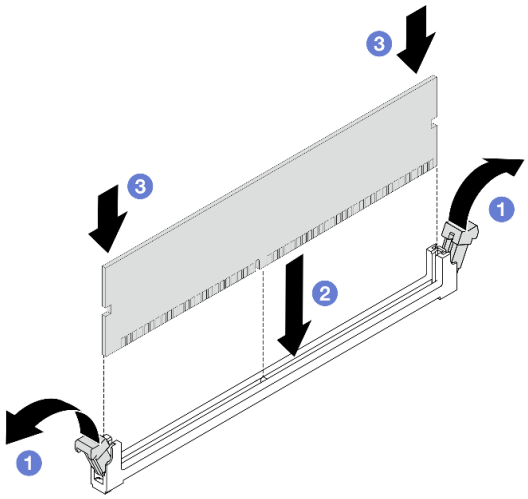

Figure 221. Installing the memory module

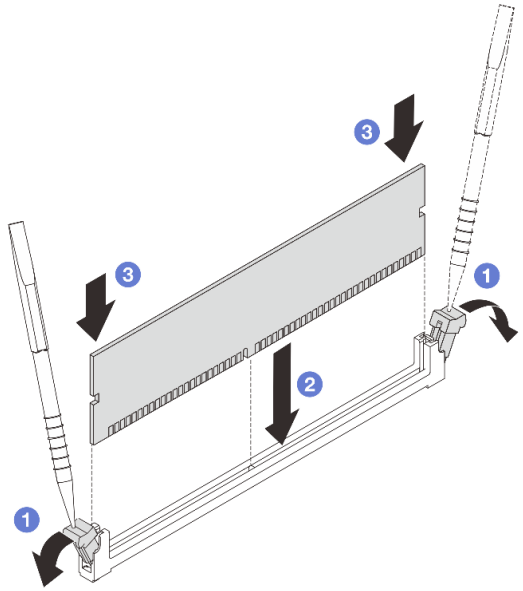

Figure 222. Installing the memory module for Compute Complex Neptune Core Module

Attention:

- Before you install a memory module into the slot, make sure that the clips are on open position, and the slot is clear of any debris.
- To avoid breaking the retaining clips or damaging the memory module slots, open and close the clips gently.
- For the Compute Complex Neptune Core Module, use the memory module tool to open the retaining clip.

a. (1) Open the retaining clip on each end of the memory module slot.

b. (2) Identify the key on the memory module and then align the key to the slot, and gently place the memory module into the slot with both hands.

c. (3) Press both ends of the memory module straight down into the slot until the retaining clips snap into the locked position.

Note: If there is a gap between the memory module and the retaining clips, the memory module has not been correctly inserted. In this case, open the retaining clips, remove the memory module, and then reinsert it.

Step 4. (Optional) For the Compute Complex Neptune Core Module, install the memory module brackets.

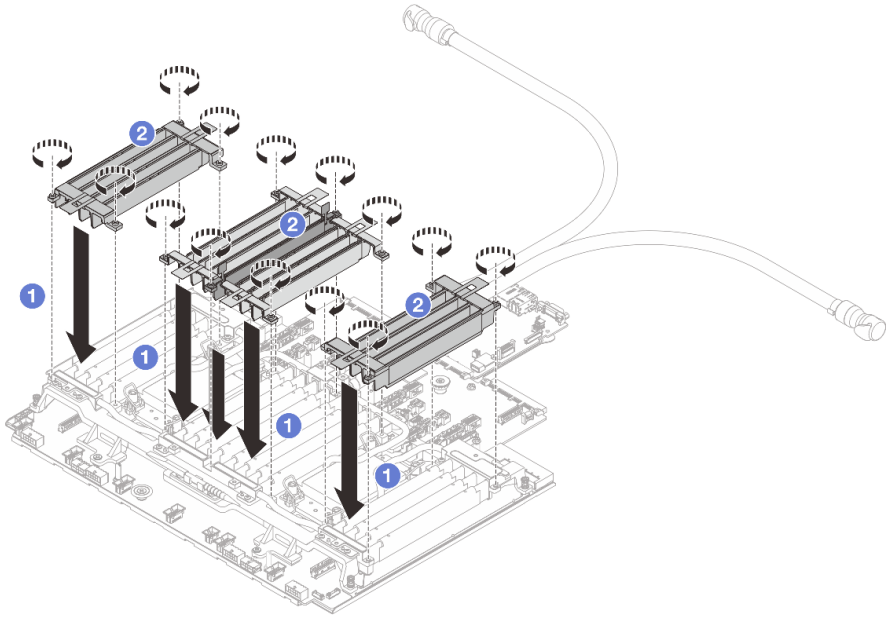

Figure 223. Installing the memory module brackets

a. 1 Insert the memory module brackets on the processor board.

b. 2 Fully tighten the screws until they stop.

Notes: Sequence for installing brackets and screws：
- Sequence for installing brackets: 1 > 2 >3.
- Sequence for tightening screws: 3 > 2 >1

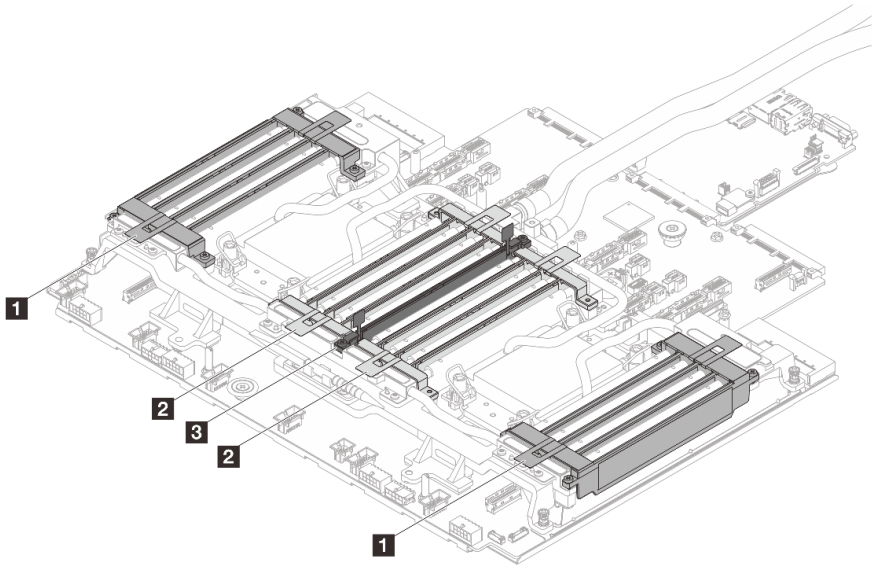

After you finish

Complete the parts replacement. See “Complete the parts replacement” on page 341.

Demo video

Watch the procedure on YouTube

MicroSD card replacement

Follow the instructions in this section to remove and install the MicroSD card.

- “Remove the MicroSD card” on page 216
- “Install the MicroSD card” on page 217

Remove the MicroSD card

Follow the instructions in this section to remove the MicroSD card.

About this task

Attention:

- Read “Installation Guidelines” on page 1 and “Safety inspection checklist” on page 2 to ensure that you work safely.
- Power off the server and peripheral devices and disconnect the power cords and all external cables. See “Power off the server” on page 27.
- Prevent exposure to static electricity, which might lead to system halt and loss of data, by keeping static-sensitive components in their static-protective packages until installation, and handling these devices with an electrostatic-discharge wrist strap or other grounding system.

Procedure

Step 1. Make preparation for the task.

a. Remove the top cover. See “Remove the top cover” on page 335.

b. If your server comes with riser assemblies, remove them first. See “Remove a rear riser assembly” on page 291.

c. If your server comes with a rear drive assembly, remove it first. See “Rear drive cage replacement” on page 271.

Step 2. Remove the MicroSD card.

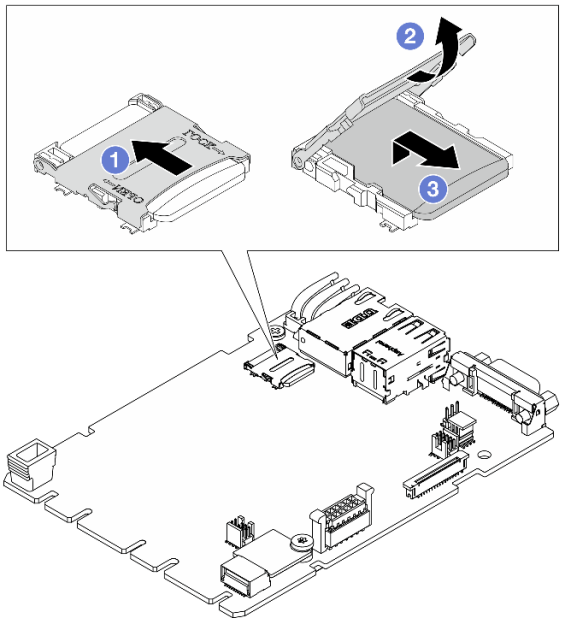

Figure 224. Removing the MicroSD card

a. 1 Slide the socket lid to open position.

b. 2 Open the socket lid.

c. 3 Remove the MicroSD card from the socket.

Note: After the MicroSD card is removed, the historical data of the firmware and user data uploaded through Remote Disc On Card (RDOC) will be lost, and the firmware rollback function and extended RDOC space will not be supported. To enable the two features, it will need to install a new MicroSD card.

After you finish

If you are instructed to return the component or optional device, follow all packaging instructions, and use any packaging materials for shipping that are supplied to you.

Demo video

Watch the procedure on YouTube

Install the MicroSD card

Follow the instructions in this section to install the MicroSD card.

About this task

Attention:

- Read “Installation Guidelines” on page 1 and “Safety inspection checklist” on page 2 to ensure that you work safely.
- Power off the server and peripheral devices and disconnect the power cords and all external cables. See “Power off the server” on page 27.
- Prevent exposure to static electricity, which might lead to system halt and loss of data, by keeping static-sensitive components in their static-protective packages until installation, and handling these devices with an electrostatic-discharge wrist strap or other grounding system.

Procedure

Step 1. Install the MicroSD card.

Notes:

- If replacing with a new MicroSD card, the firmware historical data and user data stored in the defective MicroSD card would be lost. After a new MicroSD card is installed, subsequent firmware update history will be saved to the new card.
- To update firmware, refer to “Updating Server Firmware” section in Lenovo XClarity Controller 3.

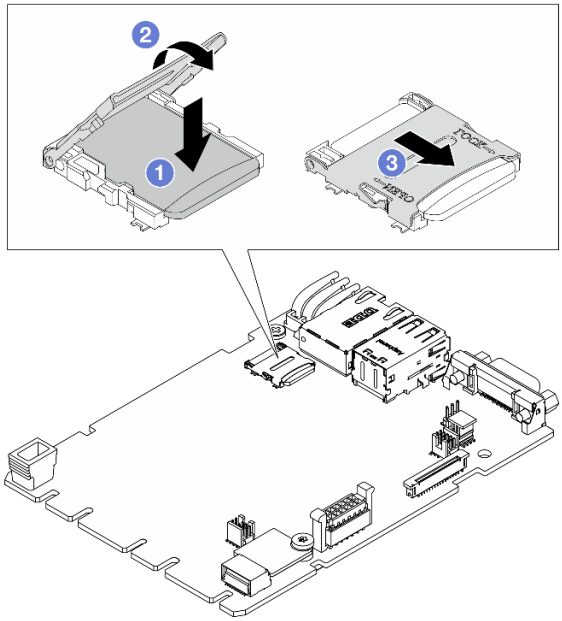

Figure 225. Installing the MicroSD card

a. 1 Place the MicroSD card into the socket.
b. 2 Close the socket lid.
c. 3 Slide the socket lid to lock position.

After you finish

1. Install any components that you have removed:
   a. “Install a rear riser assembly” on page 302

b. “Rear drive cage replacement” on page 271

2. Complete the parts replacement. See “Complete the parts replacement” on page 341.

Demo video

Watch the procedure on YouTube

Middle drive cage and drive backplane replacement

Follow the instructions in this section to remove and install the 2.5-inch middle drive cage and drive backplane.

- “Remove the middle drive cage and drive backplane” on page 219
- “Install the middle drive backplane and drive cage” on page 221

Remove the middle drive cage and drive backplane

Follow the instructions in this section to remove the 2.5-inch middle drive cage and drive backplane.

About this task

Attention:

- Read “Installation Guidelines” on page 1 and “Safety inspection checklist” on page 2 to ensure that you work safely.
- Power off the server and peripheral devices and disconnect the power cords and all external cables. See “Power off the server” on page 27.
- Prevent exposure to static electricity, which might lead to system halt and loss of data, by keeping static-sensitive components in their static-protective packages until installation, and handling these devices with an electrostatic-discharge wrist strap or other grounding system.
- Before you remove or make changes to drives, drive controllers (including controllers that are integrated on the system board assembly), drive backplanes or drive cables, back up all important data that is stored on drives.
- Before you remove any component of a RAID array (drive, RAID card, etc.), back up all RAID configuration information.

Procedure

Step 1. Make preparation for the task.

a. If the server is installed in a rack, slide the server out on its rack slide rails to gain access to the top cover, or remove the server from the rack. See “Server replacement” on page 34.

b. Remove the top cover. See “Remove the top cover” on page 335.

c. Remove the system fan cage for easier operation. See “Remove the system fan cage” on page 333.

d. Disconnect cables from the middle drive backplane.

Step 2. Remove the middle drive cage.

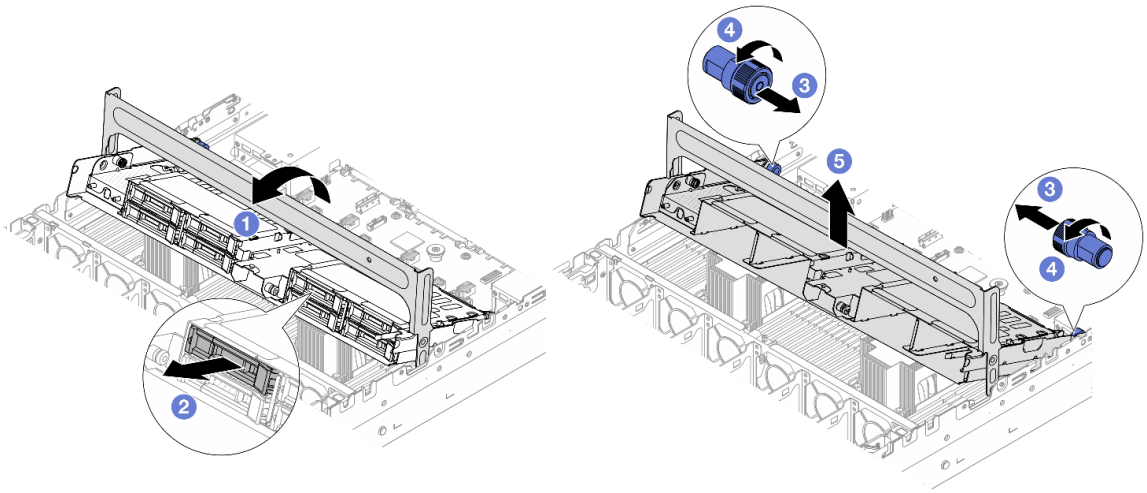

Figure 226. Removing the middle drive cage

a. Rotate the drive cage handle to open it.
b. Remove the drives from the drive cage. See Remove a 2.5-inch or 3.5-inch hot-swap drive.
c. Pull the blue plungers to release the drive cage.
d. Twist the blue plungers to keep them in released state.
e. Carefully lift the drive cage up from the chassis.

Step 3. Remove the middle drive backplane.

Note: Depending on the specific type, your backplane might look different from the illustration.

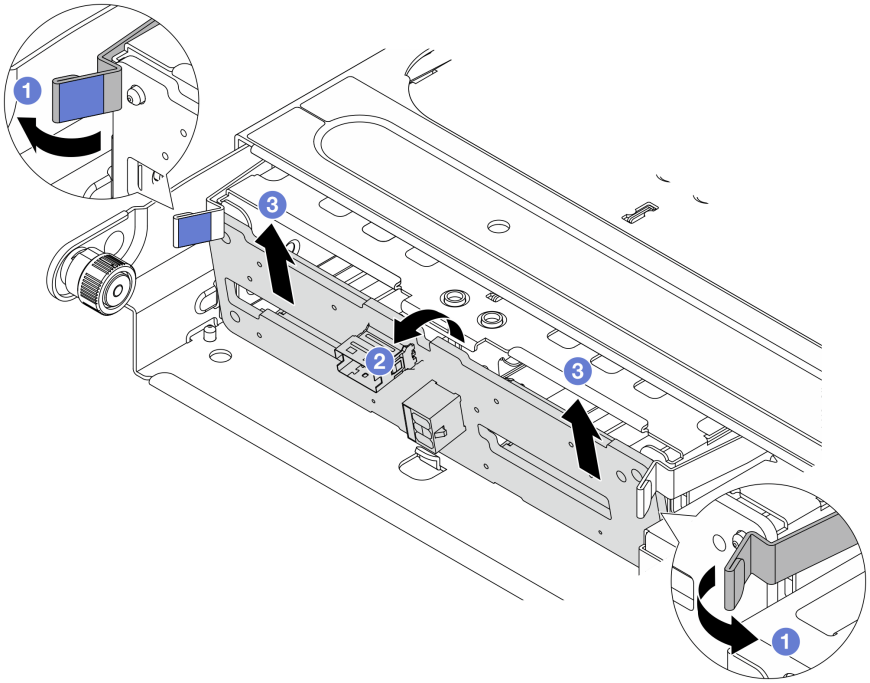

Figure 227. Removing the 2.5-inch middle drive backplane

a. 1 Slightly pivot the release latches outwards as shown.

b. 2 Rotate the backplane from the top to disengage it from the pins on the drive cage.

c. 3 Carefully lift the backplane out of the drive cage.

After you finish

If you are instructed to return the component or optional device, follow all packaging instructions, and use any packaging materials for shipping that are supplied to you.

Demo video

Watch the procedure on YouTube

Install the middle drive backplane and drive cage

Follow the instructions in this section to install the 2.5-inch middle drive backplane and drive cage.

About this task

Attention:

- Read “Installation Guidelines” on page 1 and “Safety inspection checklist” on page 2 to ensure that you work safely.
- Power off the server and peripheral devices and disconnect the power cords and all external cables. See “Power off the server” on page 27.
- Prevent exposure to static electricity, which might lead to system halt and loss of data, by keeping static-sensitive components in their static-protective packages until installation, and handling these devices with an electrostatic-discharge wrist strap or other grounding system.
- The middle drive cage is supported on some server models with thermal requirements. See “Thermal rules” on page 17 to ensure that the server is under permitted ambient temperature and the correct heat sink and system fans are used. If needed, replace your heat sink or system fan first.
  - “Processor and heat sink replacement (trained technician only)” on page 236
  - “System fan replacement” on page 329

Procedure

Step 1. Touch the static-protective package that contains the new part to any unpainted surface on the outside of the server. Then, take the new part out of the package and place it on a static-protective surface.

Step 2. (Optional) Install two middle brackets.

Figure 228. Installing middle brackets

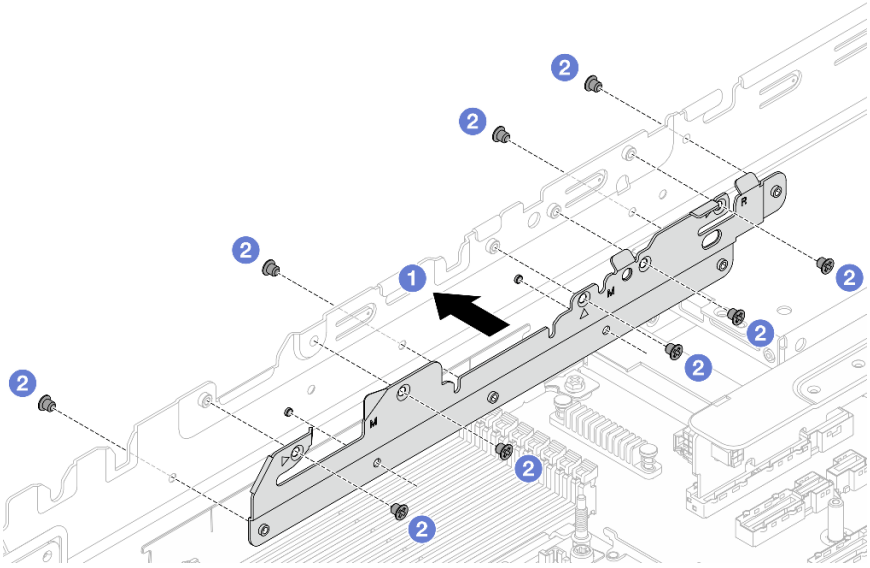

a. 1 Align two holes in the lower part of the middle bracket with the pins on the chassis, and install the middle brackets into the chassis.

b. 2 Install the screws to secure the middle brackets.

Step 3. Install the drive backplane into the middle drive cage.

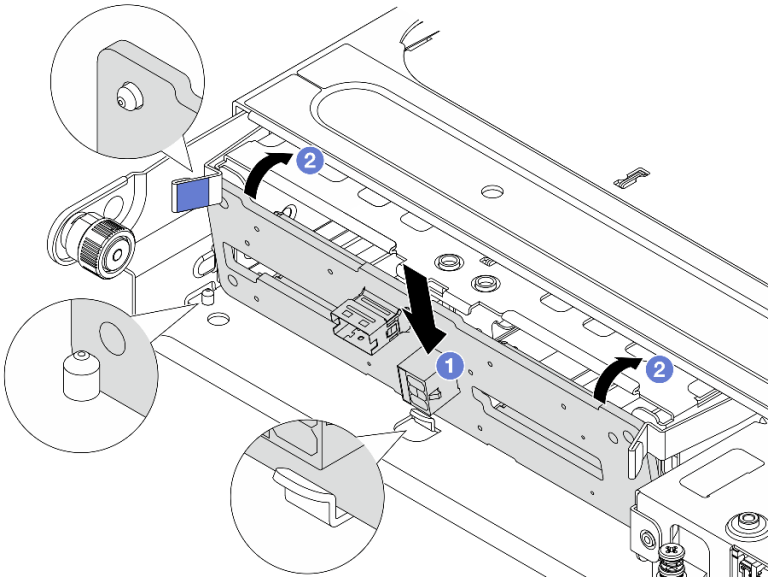

Figure 229. Installing the 2.5-inch middle drive backplane

a. 1 Align the bottom of the backplane with the studs at the bottom of the drive cage, and lower the backplane into the drive cage.

b. 2 Push the top of the backplane forward until it clicks in place. Ensure that the holes in the backplane pass through the pins on the drive cage, and the release latches secure the backplane in position.

Step 4. Connect cables to the middle drive backplane. See ***Internal Cable Routing Guide***.

Step 5. Install the middle drive cage and drives.

Note: If any cables need to go through beneath the middle drive cage, route the cables before installing the cage.

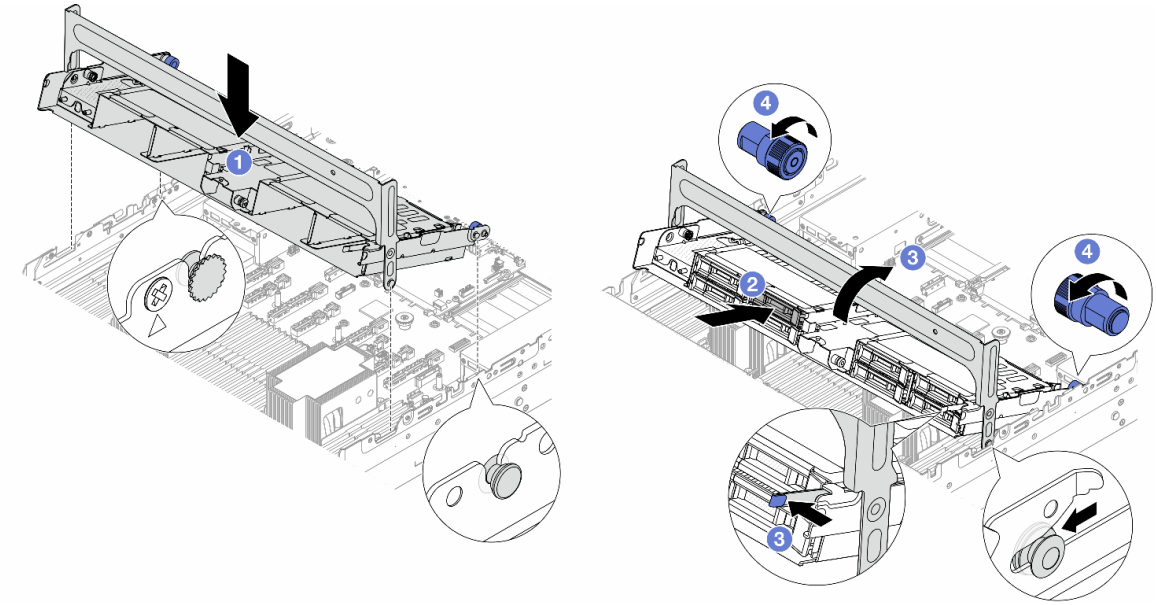

Figure 230. Installing the middle drive cage and drives

a. 1 Align the pins on the middle cage with the corresponding slots on the chassis, and lower the drive cage down into place.

b. 2 Install drives into the middle drive cage. See Install a 2.5-inch or 3.5-inch hot-swap drive.

c. 3 Press the latch as shown and close the handle.

d. 4 Twist the blue plungers to secure the drive cage in place.

After you finish

Complete the parts replacement. See “Complete the parts replacement” on page 341.

Demo video

Watch the procedure on YouTube

Power supply unit replacement

Follow the instructions in this section to remove and install a power supply unit.

- “Remove a power supply unit” on page 223
- “Install a power supply unit” on page 229

Remove a power supply unit

Follow the instructions in this section to remove a power supply unit.

About this task

If the power supply unit to be removed is the only one installed, the power supply unit is not hot-swappable. Before removing it, you must turn off the server first. To support redundancy mode or hot-swap, install an additional hot-swap power supply unit.

Safety information for AC power supplies

S035

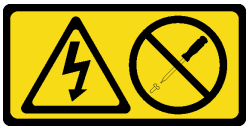

CAUTION:
Never remove the cover on a power supply or any part that has this label attached. Hazardous voltage, current, and energy levels are present inside any component that has this label attached. There are no serviceable parts inside these components. If you suspect a problem with one of these parts, contact a service technician.

S002

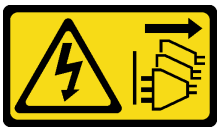

CAUTION:
The power-control button on the device and the power switch on the power supply do not turn off the electrical current supplied to the device. The device also might have more than one power cord. To remove all electrical current from the device, ensure that all power cords are disconnected from the power source.

S001



DANGER

Electrical current from power, telephone, and communication cables is hazardous.
To avoid a shock hazard:

- **Connect all power cords to a properly wired and grounded electrical outlet/source.**
- **Connect any equipment that will be attached to this product to properly wired outlets/sources.**
- **When possible, use one hand only to connect or disconnect signal cables.**
- **Never turn on any equipment when there is evidence of fire, water, or structural damage.**
- **The device might have more than one power cord, to remove all electrical current from the device, ensure that all power cords are disconnected from the power source.**

Safety information for DC power supplies

CAUTION:
240 V dc input (input range: 180-300 V dc) is supported in Chinese Mainland ONLY. Power supply with 240 V dc input cannot support hot plugging power cord function. Before removing the power supply with dc input, please turn off server or disconnect dc power sources at the breaker panel or by turning off the power source. Then, remove the power cord.



在直流输入状态下，若电源供应器插座不支持热插拔功能，请务必不要对设备电源线进行热插拔，此操作可能导致设备损坏及数据丢失。因错误执行热插拔导致的设备故障或损坏，不属于保修范围。

NEVER CONNECT AND DISCONNECT THE POWER SUPPLY CABLE AND EQUIPMENT WHILE YOUR EQUIPMENT IS POWERED ON WITH DC SUPPLY (hot-plugging). Otherwise you may damage the equipment and result in data loss, the damages and losses result from incorrect operation of the equipment will not be covered by the manufacturers' warranty.

S035

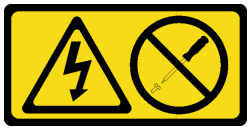

CAUTION:
Never remove the cover on a power supply or any part that has this label attached. Hazardous voltage, current, and energy levels are present inside any component that has this label attached. There are no serviceable parts inside these components. If you suspect a problem with one of these parts, contact a service technician.

S019

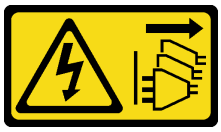

CAUTION:
The power-control button on the device does not turn off the electrical current supplied to the device. The device also might have more than one connection to dc power. To remove all electrical current from the device, ensure that all connections to dc power are disconnected at the dc power input terminals.

S029



DANGER

For -48V dc power supply, electrical current from power cords is hazardous.
To avoid a shock hazard:

- **To connect or disconnect -48V dc power cords when you need to remove/install redundancy power supply unit(s).**

To Connect:

1. Turn OFF subject dc power source(s) and equipment (s) that are attached to this product.
2. Install the power supply unit(s) into the system housing.
3. Attach dc power cord(s) to the product.
   - Ensure correct polarity of -48 V dc connections: RTN is + and -Vin (typical -48 V) dc is -. Earth ground should be connected very well.
4. Connect dc power cord(s) to subject power source (s).
5. Turn ON all the power source(s).

To Disconnect:

1. Disconnect or turn off the subject dc power source(s) (at the breaker panel) before removing the power supply unit(s).
2. Remove the subject dc cord(s) and make sure the wire terminal of power cord(s) is insulated.
3. Unplug the subject power supply unit(s) from the system housing.

Attention:

- Read “Installation Guidelines” on page 1 and “Safety inspection checklist” on page 2 to ensure that you work safely.
- Prevent exposure to static electricity, which might lead to system halt and loss of data, by keeping static-sensitive components in their static-protective packages until installation, and handling these devices with an electrostatic-discharge wrist strap or other grounding system.

Procedure

Step 1. If the server is in a rack, adjust the cable management arm (CMA) to gain access to the power supply unit bay.

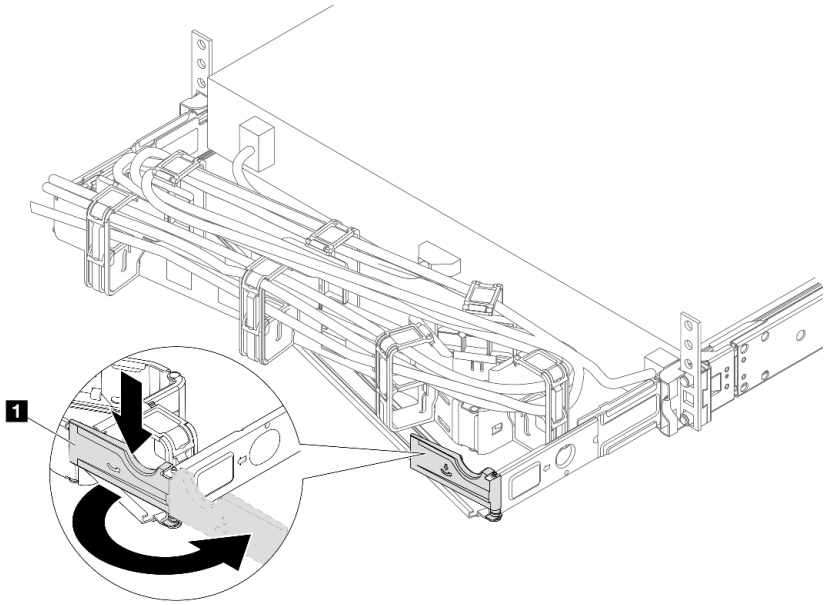

Figure 231. Adjusting the right side

a. Press down the stop bracket 1 and rotate it to the open position.
b. Rotate the CMA out of the way to gain access to the power supply units.

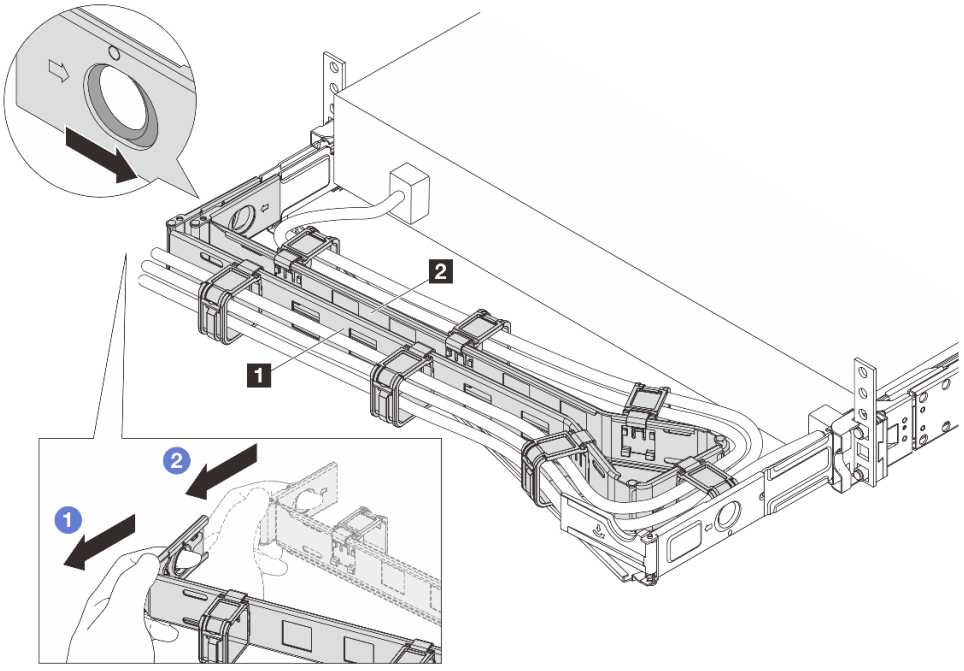

Figure 232. Removing the left side

a. 1 Press the clip as illustrated above to unlock the outer CMA 1 from the rack.
b. 2 Repeat the previous step to inner CMA 2 to unlock it.

Step 2. Disconnect the power cord from the power supply unit.

- For 240 V DC power supply units, turn off the server, and then, disconnect both ends of the power cord and keep it in an ESD-safe place.
- For AC power supply units, disconnect both ends of the power cord and keep it in an ESD-safe place.
- For –48V DC power supply units:
  1. Disconnect the power cords from the electrical outlet.
  2. Use a slotted screwdriver to loosen the captive screws on the power supply terminal block.
  3. Disconnect the power cords from the power supply unit, make the wire terminal insulated, and keep them in an ESD-safe place.

Note: If you are replacing two power supply units, replace them one by one to ensure that the power supply to the server is not interrupted. Do not disconnect the power cord from the secondly replaced power supply unit until both LEDs on the firstly replaced CRPS Premium power supply unit are lit green, or the LED on a CRPS one is lit green. For the location of the power-supply-unit LEDs, refer to “LEDs on the power supply unit” in *User Guide*.

Step 3. Press the release tab toward the handle and carefully pull the handle at the same time to slide the power supply unit out of the chassis.

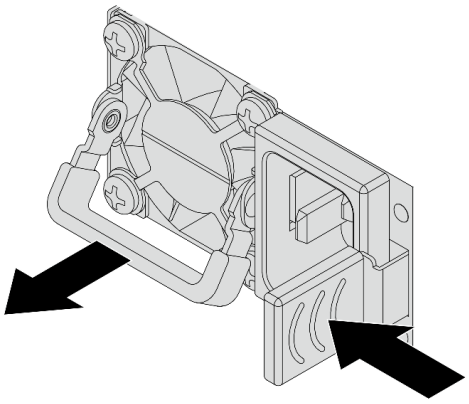

Figure 233. Removing the power supply unit

Step 4. Install the power-supply-unit filler to cover the power supply bay.

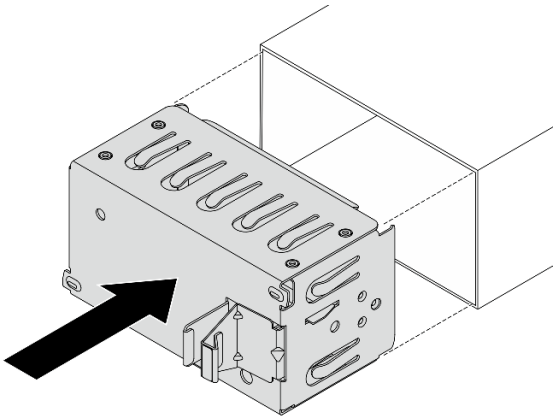

Figure 234. Installing the power-supply-unit filler

After you finish

1. Install a new power supply unit to cover the power supply bay. See "Install a power supply unit" on page 229.

   Important: To ensure proper cooling during normal server operation, both power supply bays must be occupied. This means that each bay must have a power supply unit installed; or one has a power supply unit installed and the other has a power-supply-unit filler installed.
2. If you are instructed to return the component or optional device, follow all packaging instructions, and use any packaging materials for shipping that are supplied to you.

Demo video

Watch the procedure on YouTube

Install a power supply unit

Follow the instructions in this section to install a power supply unit.

About this task

The following describes the information that you must consider when installing a power supply unit:

- If the power supply unit to be removed is the only one installed, the power supply unit is not hot-swappable. Before removing it, you must turn off the server first. To support redundancy mode or hot-swap, install an additional hot-swap power supply unit.
- If you are replacing the existing power supply with a new power supply:
  - Use Lenovo Capacity Planner to calculate the required power capacity for what is configured for your server. More information about Lenovo Capacity Planner is available at: https://datacentersupport.lenovo.com/solutions/lnvo-lcp.
  - Ensure that the devices that you are installing are supported. For a list of supported optional devices for the server, go to: https://serverproven.lenovo.com.
  - Attach the power information label that comes with this option on the existing label near the power supply.

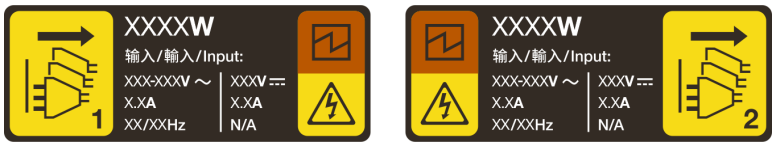

Figure 235. Example power supply unit label on the top cover

Safety information for AC power supplies

S035

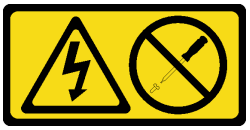

CAUTION:
Never remove the cover on a power supply or any part that has this label attached. Hazardous voltage, current, and energy levels are present inside any component that has this label attached. There are no serviceable parts inside these components. If you suspect a problem with one of these parts, contact a service technician.

S002

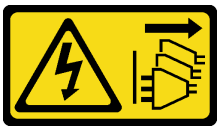

CAUTION:
The power-control button on the device and the power switch on the power supply do not turn off the electrical current supplied to the device. The device also might have more than one power cord. To remove all electrical current from the device, ensure that all power cords are disconnected from the power source.

S001



DANGER

Electrical current from power, telephone, and communication cables is hazardous.
To avoid a shock hazard:

- **Connect all power cords to a properly wired and grounded electrical outlet/source.**
- **Connect any equipment that will be attached to this product to properly wired outlets/sources.**
- **When possible, use one hand only to connect or disconnect signal cables.**
- **Never turn on any equipment when there is evidence of fire, water, or structural damage.**
- **The device might have more than one power cord, to remove all electrical current from the device, ensure that all power cords are disconnected from the power source.**

Safety information for DC power supplies

CAUTION:
240 V dc input (input range: 180-300 V dc) is supported in Chinese Mainland ONLY. Power supply with 240 V dc input cannot support hot plugging power cord function. Before removing the power supply with dc input, please turn off server or disconnect dc power sources at the breaker panel or by turning off the power source. Then, remove the power cord.



在直流输入状态下，若电源供应器插座不支持热插拔功能，请务必不要对设备电源线进行热插拔，此操作可能导致设备损坏及数据丢失。因错误执行热插拔导致的设备故障或损坏，不属于保修范围。

NEVER CONNECT AND DISCONNECT THE POWER SUPPLY CABLE AND EQUIPMENT WHILE YOUR EQUIPMENT IS POWERED ON WITH DC SUPPLY (hot-plugging). Otherwise you may damage the equipment and result in data loss, the damages and losses result from incorrect operation of the equipment will not be covered by the manufacturers' warranty.

S035

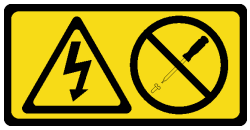

CAUTION:
Never remove the cover on a power supply or any part that has this label attached. Hazardous voltage, current, and energy levels are present inside any component that has this label attached. There are no serviceable parts inside these components. If you suspect a problem with one of these parts, contact a service technician.

S019

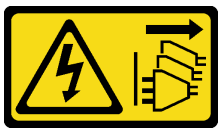

CAUTION:
The power-control button on the device does not turn off the electrical current supplied to the device. The device also might have more than one connection to dc power. To remove all electrical current from the device, ensure that all connections to dc power are disconnected at the dc power input terminals.

S029



DANGER

For -48V dc power supply, electrical current from power cords is hazardous.
To avoid a shock hazard:

- **To connect or disconnect -48V dc power cords when you need to remove/install redundancy power supply unit(s).**

To Connect:

1. Turn OFF subject dc power source(s) and equipment (s) that are attached to this product.
2. Install the power supply unit(s) into the system housing.
3. Attach dc power cord(s) to the product.
   - Ensure correct polarity of -48 V dc connections: RTN is + and -Vin (typical -48 V) dc is -. Earth ground should be connected very well.
4. Connect dc power cord(s) to subject power source (s).
5. Turn ON all the power source(s).

To Disconnect:

1. Disconnect or turn off the subject dc power source(s) (at the breaker panel) before removing the power supply unit(s).
2. Remove the subject dc cord(s) and make sure the wire terminal of power cord(s) is insulated.
3. Unplug the subject power supply unit(s) from the system housing.

Attention:

- Read "Installation Guidelines" on page 1 and "Safety inspection checklist" on page 2 to ensure that you work safely.
- Prevent exposure to static electricity, which might lead to system halt and loss of data, by keeping static-sensitive components in their static-protective packages until installation, and handling these devices with an electrostatic-discharge wrist strap or other grounding system.

Procedure

Step 1. Make sure that the power supply unit to be installed is the same as the installed ones. Otherwise, remove all existing power supply units and replace them all with the same power supply units.

Notes:
- Power supply units in the chassis must have the same wattage, vendor, and part number (or alternate part number).
- PSU with a release tab is a hot-swap PSU. The color of the release tab does not affect the serviceability of the PSU.

Step 2. If there is a power-supply-unit filler installed, remove it.

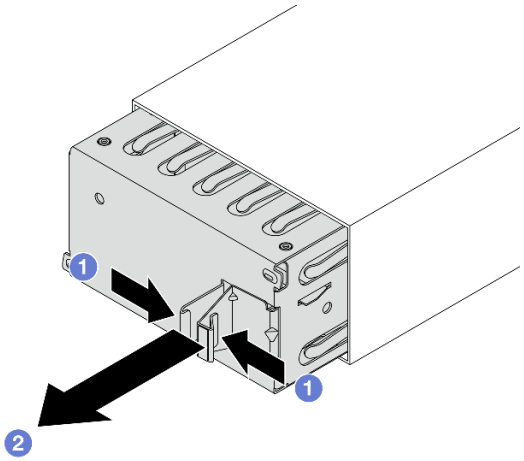

Figure 236. Removing the power-supply-unit filler

a. 1 Pinch the latches to unlock the power-supply-unit filler.

b. 2 Pull out the filler.

Step 3. Slide the power supply unit into the bay until it snaps into position.

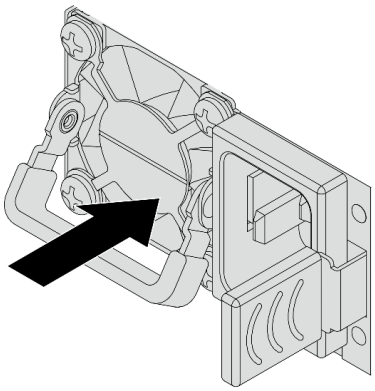

Figure 237. Installing the power supply unit

Step 4. Connect the power supply unit to a properly grounded electrical outlet.

- For 240 V DC power supply units:
  1. Turn off the server.
  2. Connect one end of the power cord to the power connector on the power supply unit.
  3. Connect the other end of the power cord to a properly grounded electrical outlet.
- For AC power supply units:
  1. Connect one end of the power cord to the power connector on the power supply unit.
  2. Connect the other end of the power cord to a properly grounded electrical outlet.
- For –48V DC power supply units:
  1. Use a slotted screwdriver to loosen three captive screws on the power supply terminal block.

2. Check the type label on the power supply block and each power cord.

Type	PSU terminal block	Power cord
Input	-Vin	-Vin
Ground	⏚	GND
Input	RTN	RTN

3. Face the groove side of each power cord pin upwards, and then plug the pins into corresponding holes on the power block. Use the table above for guidance to ensure that the pins find correct slots.
4. Tighten the captive screws on the power block. Ensure that the screws and cord pins are secured in place and no bare metal parts are shown.
5. Connect the other end of the cables to a properly grounded electrical outlet. Ensure that the cable ends find correct outlets.

Step 5. Make sure the power supply unit handle is perpendicular to the power supply unit; then, tie the power cord to the handle with the pre-attached strap as shown below.

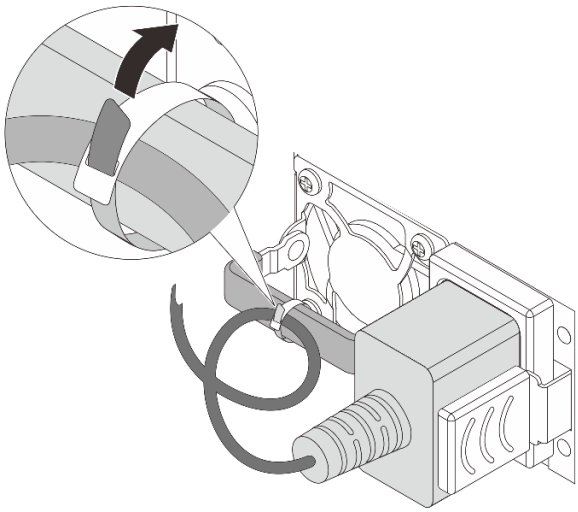

Figure 238. Routing and tying power cord

After you finish

1. If you have adjusted the CMA to gain access to the power supply bay, readjust the CMA back in place.
2. If the server is turned off, turn on the server. Ensure that:
   - Both LEDs on the CRPS Premium power supply unit are lit green, indicating that the power supply unit is operating properly.
   - The LED on the CRPS power supply unit is lit green, indicating that the power supply unit is operating properly.

Demo video

Watch the procedure on YouTube

Processor and heat sink replacement (trained technician only)

Follow the instructions in this section to replace an assembled processor and heat sink, known as a processor-heat-sink module (PHM), a processor, or a heat sink.

Attention: Before reusing a processor or heat sink, make sure you use Lenovo proven alcohol cleaning pad and thermal grease.

Important:
- This task must be operated by trained technicians that are certified by Lenovo Service. Do not attempt to remove or install the part without proper training and qualification.
- When the server has a Compute Complex Neptune Core Module installed, you must apply for a shipping bracket FRU first if you need to install or remove the system board assembly or processor. However, when replacing the old Compute Complex Neptune Core Module with a new one, you do not need to apply for a shipping bracket FRU as the new module package contains it.
- The processor in your server can throttle in response to thermal conditions, temporarily lowering its speed to reduce heat output. In instances where a few processor cores are throttled for an extremely short time period (100 ms or less), the only indication might be an entry in the operating system event log with no corresponding entry in the system XCC event log. If this situation occurs, the event can be ignored and processor replacement is not required.

Remove a processor and heat sink

This task has instructions for removing an assembled processor and heat sink, known as a processor-heat-sink module (PHM). This task requires a Torx T30 screwdriver. This procedure must be executed by a trained technician.

About this task

S002

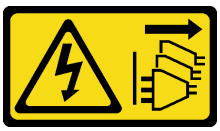

CAUTION:
The power-control button on the device and the power switch on the power supply do not turn off the electrical current supplied to the device. The device also might have more than one power cord. To remove all electrical current from the device, ensure that all power cords are disconnected from the power source.

S011



CAUTION:
Sharp edges, corners, or joints nearby.

Attention:

- Read “Installation Guidelines” on page 1 and “Safety inspection checklist” on page 2 to ensure that you work safely.

- Power off the server and peripheral devices and disconnect the power cords and all external cables. See "Power off the server" on page 27.
- Prevent exposure to static electricity, which might lead to system halt and loss of data, by keeping static-sensitive components in their static-protective packages until installation, and handling these devices with an electrostatic-discharge wrist strap or other grounding system.
- Each processor socket must always contain a cover or a PHM. When removing or installing a PHM, protect empty processor sockets with a cover.
- Do not touch the processor socket or processor contacts. Processor-socket contacts are very fragile and easily damaged. Contaminants on the processor contacts, such as oil from your skin, can cause connection failures.
- Do not allow the thermal grease on the processor or heat sink to come in contact with anything. Contact with any surface can compromise the thermal grease, rendering it ineffective. Thermal grease can damage components, such as the electrical connectors in the processor socket.
- Remove and install only one PHM at a time. If the system supports multiple processors, install the PHMs starting with the first processor socket.

Note: The heat sink, processor, and processor carrier for your system might be different from those shown in the illustrations.

The following illustration shows the components of the PHM.

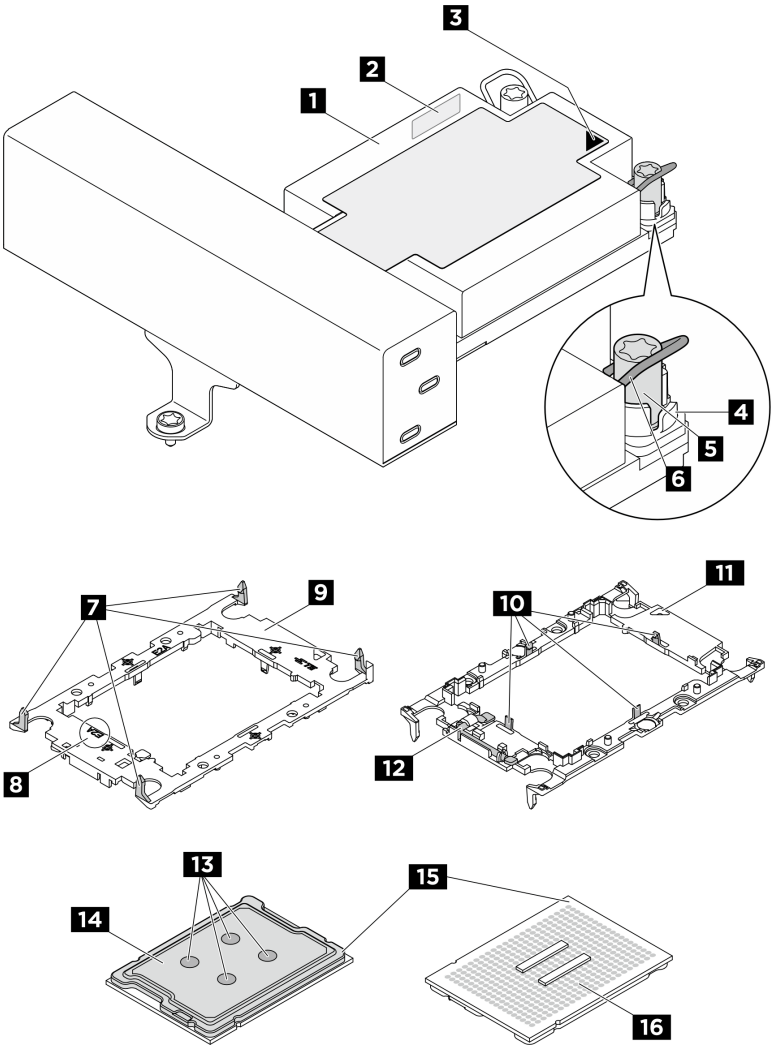

Figure 239. PHM components

1 Heat sink	2 Processor identification label
3 Heat sink triangular mark	4 Nut and wire bail retainer
5 Torx T30 nut	6 Anti-tilt wire bail
7 Clips to secure carrier to a heat sink	8 Processor carrier code marking
9 Processor carrier	10 Clips to secure processor in a carrier
11 Carrier triangular mark	12 Processor ejector handle
13 Thermal grease	14 Processor heat spreader
15 Processor triangular mark	16 Processor contacts

Torque screwdriver type list	**Screw Type**
Torx T30 head screwdriver	Torx T30 screw

Procedure

Step 1. Make preparations for this task.

a. If the server is installed in a rack, slide the server out on its rack slide rails to gain access to the top cover, or remove the server from the rack. See “Server replacement” on page 34.

b. Remove the top cover. See “Remove the top cover” on page 335.

c. If your server comes with an air baffle or a middle drive cage, remove it. See “Remove the air baffle” on page 54 or Remove the middle drive cage and drive backplane.

d. Remove the system fan cage. See “Remove the system fan cage” on page 333.

Step 2. Remove the PHM from the system board assembly.

Notes:

- Do not touch the contacts on the bottom of the processor.
- Keep the processor socket clean from any object to prevent possible damages.
- The procedure of replacing a 2U entry PHM is the same as that of replacing a 2U standard PHM.

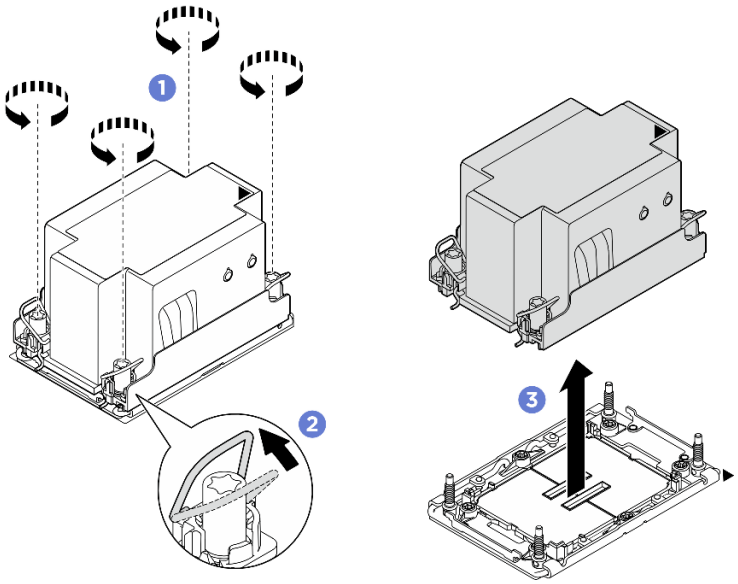

Figure 240. Removing a 2U standard PHM

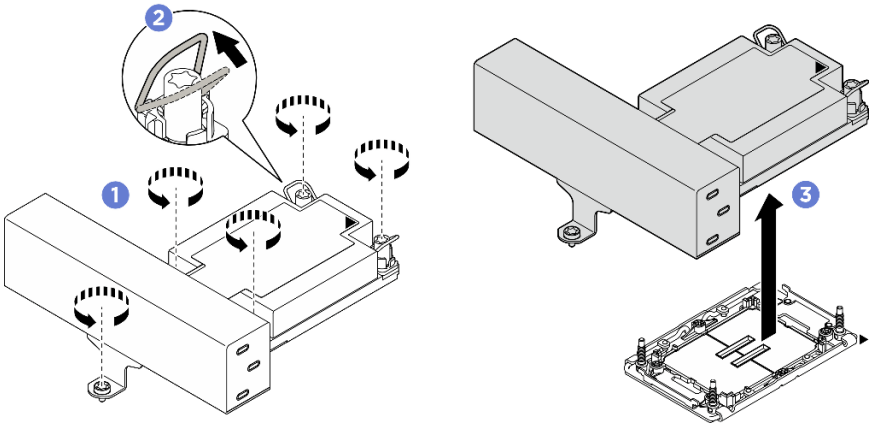

Figure 241. Removing a 1U T-shape performance PHM

a. 1 Fully loosen the Torx T30 nuts on the PHM ***in the removal sequence shown*** on the heat-sink label.

b. (2) Rotate the anti-tilt wire bails inward.

c. (3) Carefully lift the PHM from the processor socket. If the PHM cannot be fully lifted out of the socket, further loosen the Torx T30 nuts and try lifting the PHM again.

After you finish

- Each processor socket must always contain a cover or a PHM. Protect empty processor sockets with a cover or install a new PHM.
- If you are not going to install a PHM back, cover the processor socket with the socket cover and install a PHM filler.

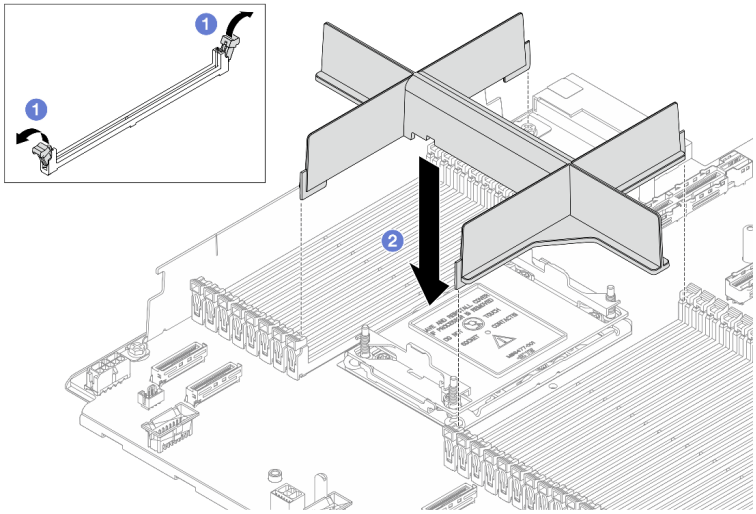

Figure 242. Installing a PHM filler

1. (1) Gently open the retaining clip on each end of the memory module slots next to the left and right sides of the processor.
2. (2) Align the PHM filler with the slots, and place the PHM filler on the slots with both hands. Firmly press the PHM filler straight down into the slots until the retaining clips snap into the locked position.

- If you are removing the PHM as part of a system board assembly replacement, set the PHM aside.
- If you are reusing the processor or heat sink, separate the processor from its retainer. See “Separate the processor from carrier and heat sink” on page 240.
- If you are instructed to return the component or optional device, follow all packaging instructions, and use any packaging materials for shipping that are supplied to you.

Demo video

Watch the procedure on YouTube

Separate the processor from carrier and heat sink

This task has instructions for separating a processor and its carrier from an assembled processor and heat sink, known as a processor-heat-sink module (PHM). This procedure must be executed by a trained technician.

About this task

Attention:

- Read “Installation Guidelines” on page 1 and “Safety inspection checklist” on page 2 to ensure that you work safely.
- Power off the server and disconnect all power cords for this task.
- Prevent exposure to static electricity, which might lead to system halt and loss of data, by keeping static-sensitive components in their static-protective packages until installation, and handling these devices with an electrostatic-discharge wrist strap or other grounding system.
- Do not touch the processor contacts. Contaminants on the processor contacts, such as oil from your skin, can cause connection failures.
- Do not allow the thermal grease on the processor or heat sink to come in contact with anything. Contact with any surface can compromise the thermal grease, rendering it ineffective. Thermal grease can damage components, such as the electrical connectors in the processor socket.

Note: The heat sink, processor, and processor carrier for your system might be different from those shown in the illustrations.

Procedure

Step 1. Separate the processor from the heat sink and carrier.

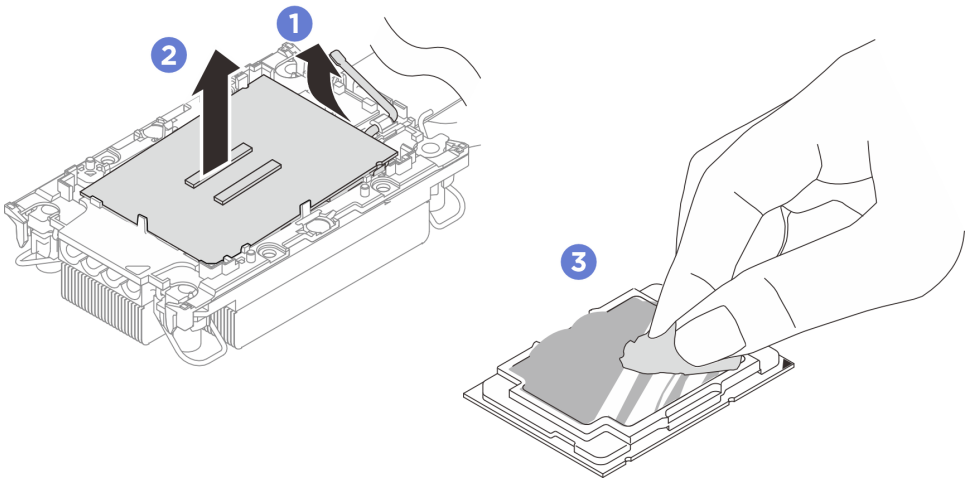

Figure 243. Separating a processor from the heat sink and carrier

Note: Do not touch the contacts on the processor.

a. 1 Lift the handle to release the processor from the carrier.

b. 2 Hold the processor by its edges; then, lift the processor from the heat sink and carrier.

c. 3 Without putting the processor down, wipe the thermal grease from the top of the processor with an alcohol cleaning pad; then, place the processor on a static protective surface with the processor-contact side up.

Step 2. Separate the processor carrier from the heat sink.

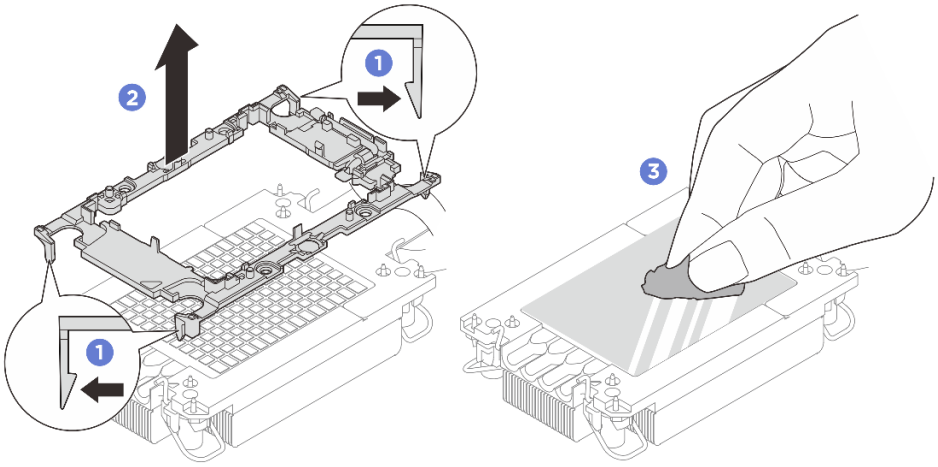

Figure 244. Separating a processor carrier the from heat sink

Note: The processor carrier will be discarded and replaced with a new one.

a. 1 Release the retaining clips from the heat sink.

b. 2 Lift the carrier from the heat sink.

c. 3 Wipe the thermal grease from the bottom of the heat sink with an alcohol cleaning pad.

After you finish

If you are instructed to return the defective component, package the part to prevent any shipping damage. Reuse the packaging the new part arrived in and follow all packaging instructions.

Install a processor and heat sink

This task has instructions for installing an assembled processor and heat sink, known as a processor-heat-sink module (PHM). This task requires a Torx T30 screwdriver. This procedure must be executed by a trained technician.

About this task

S011



CAUTION:
Sharp edges, corners, or joints nearby.

Attention:

- Read “Installation Guidelines” on page 1 and “Safety inspection checklist” on page 2 to ensure that you work safely.
- Power off the server and peripheral devices and disconnect the power cords and all external cables. See “Power off the server” on page 27.

- Prevent exposure to static electricity, which might lead to system halt and loss of data, by keeping static-sensitive components in their static-protective packages until installation, and handling these devices with an electrostatic-discharge wrist strap or other grounding system.
- Each processor socket must always contain a cover or a PHM. When removing a PHM, protect empty processor sockets with a cover.
- Do not touch the processor socket or processor contacts. Processor-socket contacts are very fragile and easily damaged. Contaminants on the processor contacts, such as oil from your skin, can cause connection failures.
- Do not allow the thermal grease on the processor or heat sink to come in contact with anything. Contact with any surface can compromise the thermal grease, rendering it ineffective. Thermal grease can damage components, such as the electrical connectors in the processor socket.
- Remove and install only one PHM at a time. If the system supports multiple processors, install the PHMs starting with the first processor socket.

Notes:

- The heat sink, processor, and processor carrier for your system might be different from those shown in the illustrations.
- PHMs are keyed for the socket where they can be installed and for their orientation in the socket.
- See https://serverproven.lenovo.com for a list of processors supported for your server. All processors must have the same speed, number of cores, and frequency.
- Before you install a new PHM or replacement processor, update your system firmware to the latest level. See “Update the firmware” in *User Guide* and *System Configuration Guide*.

The following illustration shows the components of the PHM.

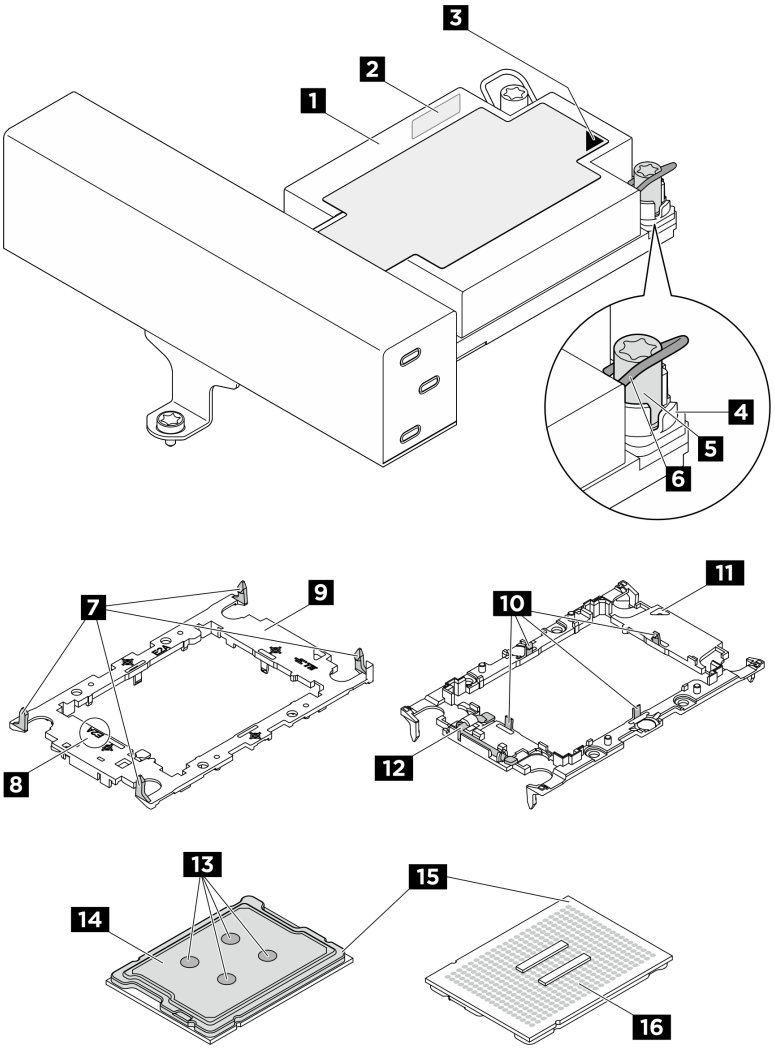

Figure 245. PHM components

1 Heat sink	2 Processor identification label
3 Heat sink triangular mark	4 Nut and wire bail retainer
5 Torx T30 nut	6 Anti-tilt wire bail
7 Clips to secure carrier to a heat sink	8 Processor carrier code marking
9 Processor carrier	10 Clips to secure processor in a carrier
11 Carrier triangular mark	12 Processor ejector handle
13 Thermal grease	14 Processor heat spreader
15 Processor triangular mark	16 Processor contacts

Torque screwdriver type list	**Screw Type**
Torx T30 head screwdriver	Torx T30 screw

Firmware and driver download: You might need to update the firmware or driver after replacing a component.

- Go to https://datacentersupport.lenovo.com/products/servers/thinksystem/sr650v4/downloads/driver-list/ to see the latest firmware and driver updates for your server.
- Go to “Update the firmware” in *User Guide* or *System Configuration Guide* for more information on firmware updating tools.

Procedure

Step 1. If you are replacing a processor and reusing the heat sink.

a. Remove the processor identification label from the heat sink and replace it with the new label that comes with the replacement processor.

b. If there is any old thermal grease on the heat sink, wipe the thermal grease from the bottom of the heat sink with an alcohol cleaning pad.

Step 2. If you are replacing a heat sink and reusing the processor.

a. Remove the processor identification label from the old heat sink and place it on the new heat sink in the same location. The label is on the side of the heat sink closest to the triangular alignment mark.

Note: If you are unable to remove the label and place it on the new heat sink, or if the label is damaged during transfer, write the processor serial number from the processor identification label on the new heat sink in the same location as the label would be placed using a permanent marker.

b. Install processor in new carrier.

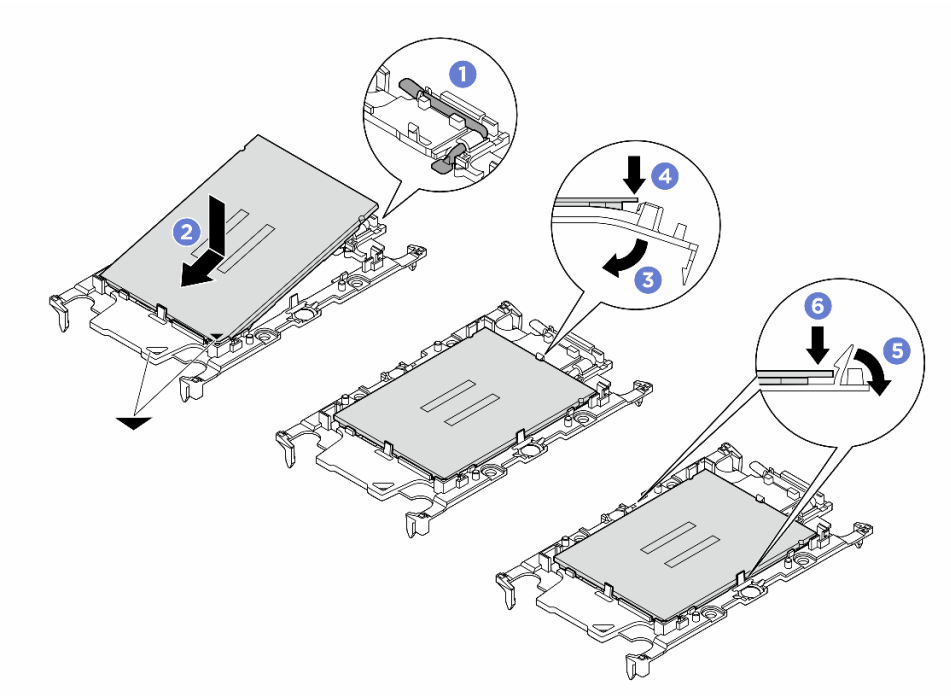

Figure 246. Installing a processor carrier

Note: Replacement heat sinks come with different processor carriers. Make sure to use the carrier with the same carrier code markings as the one discarded.

1. 1 Make sure the handle on the carrier is in the closed position.

2. Align the processor on the new carrier so that the triangular marks align; then, insert the marked end of the processor into the carrier.
3. Hold the inserted end of the processor in place; then, pivot the unmarked end of the carrier down and away from the processor.
4. Press the processor and secure the unmarked end under the clip on the carrier.
5. Carefully pivot the sides of the carrier down and away from the processor.
6. Press the processor and secure the sides under the clips on the carrier.

   Note: To prevent the processor from falling out of the carrier, keep the processor-contact side up and hold the processor-carrier assembly by the sides of the carrier.

Step 3. Apply thermal grease.

- If you are replacing the heat sink and reusing the processor, a new heat sink comes with thermal grease and you do not need to apply new thermal grease.

  Note: To ensure the best performance, check the manufacturing date on the new heat sink and make sure it does not exceed two years. Otherwise, wipe off the existing thermal grease and apply new thermal grease.
- If you are replacing the processor and reusing the heat sink, do the following steps to apply thermal grease:
  1. If there is any old thermal grease on the heat sink, wipe off the thermal grease with an alcohol cleaning pad.
  2. Carefully place the processor and carrier in the shipping tray with the processor-contact side down. Make sure the triangular mark on the carrier is oriented in the shipping tray as shown below.
  3. Apply the thermal grease on the top of the processor with syringe by forming four uniformly spaced dots, while each dot consists of about 0.1 ml of thermal grease.

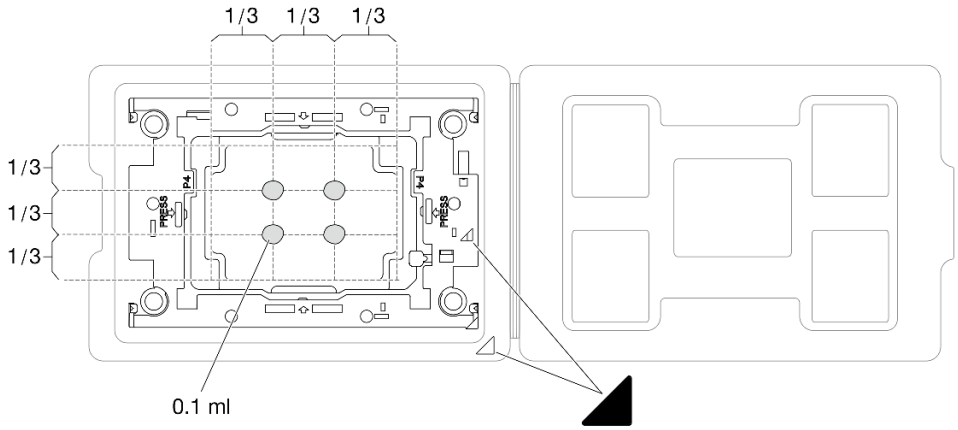

Figure 247. Thermal grease application with processor in shipping tray

Step 4. Assemble the processor and heat sink.

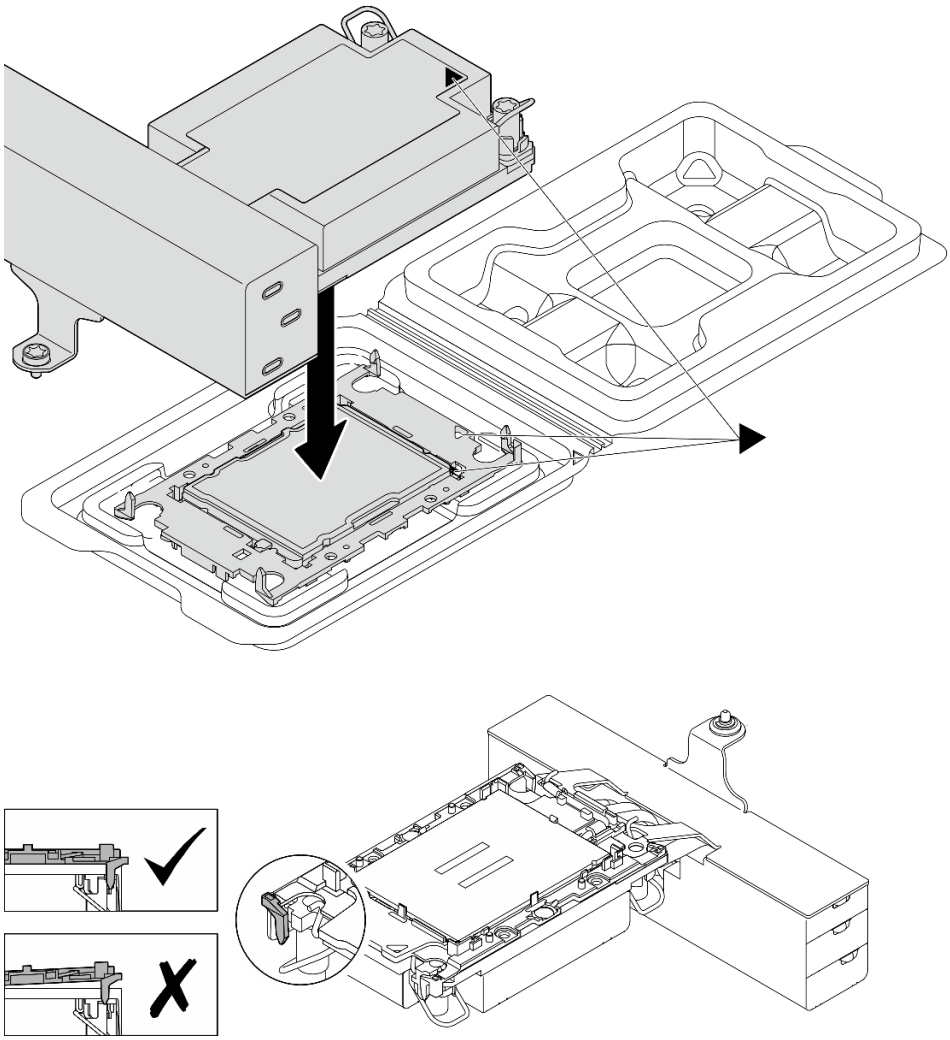

Figure 248. Assembling the PHM with processor in shipping tray

a. Align the triangular mark on the heat sink label with the triangular mark on the processor carrier and processor.

b. Install the heat sink onto the processor-carrier.

c. Press the carrier into place until the clips at all four corners engage. Visually inspect to make sure that there is no gap between the processor carrier and the heat sink.

Step 5. (Optional) If the server has been pre-installed with a PHM filler and a socket filler, generally on processor 2, it is required to remove the fillers first before you proceed with further installation.

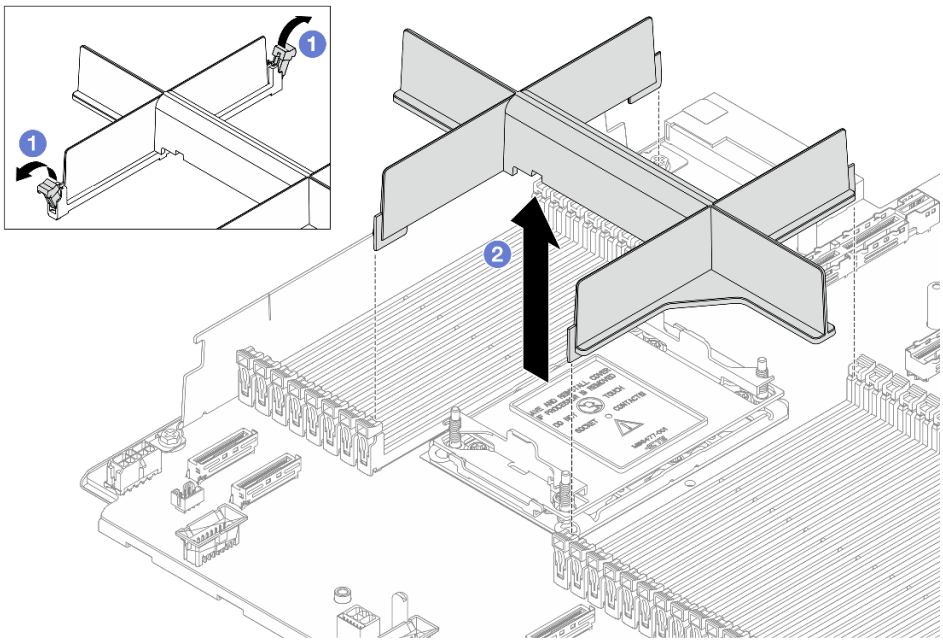

Figure 249. Removing a PHM filler

a. 1 Open the retaining clip on each end of the memory module slots next to the left and right sides of processor 2.

b. 2 Lift the PHM filler from the slots.

Step 6. Install the processor-heat-sink module into the processor socket.

Notes:

- Do not touch the contacts on the bottom of the processor.
- The procedure of replacing a 2U entry PHM is the same as that of replacing a 2U standard PHM.

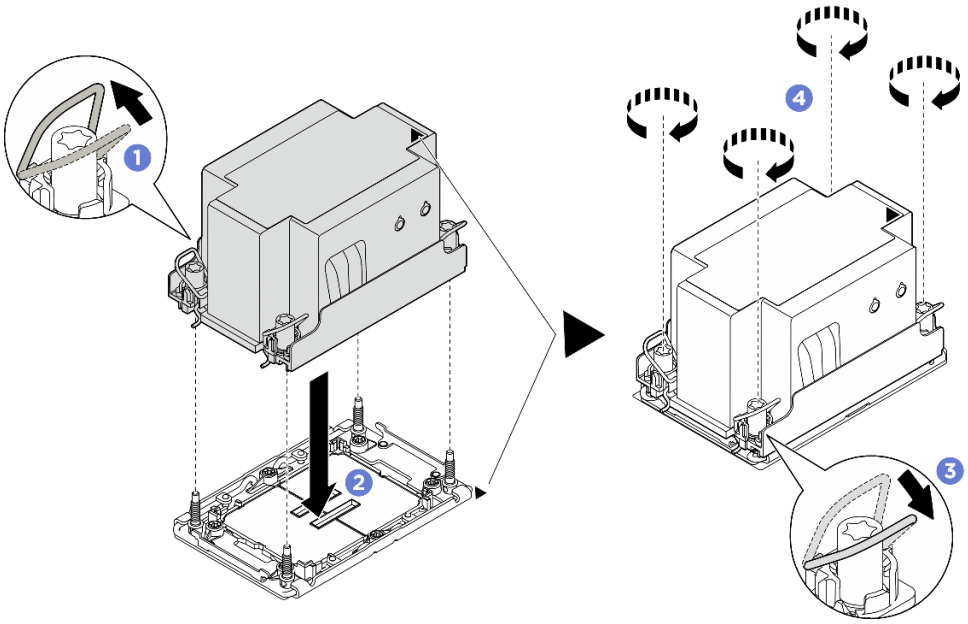

Figure 250. Installing a 2U standard PHM

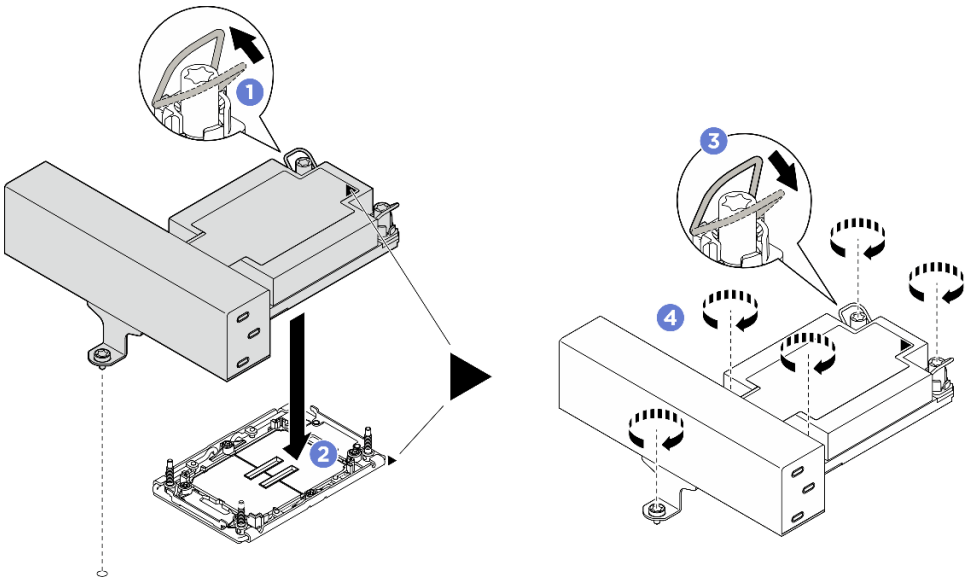

Figure 251. Installing a 1U T-shape performance PHM

a. Rotate the anti-tilt wire bails inward.

b. Align the triangular mark and four Torx T30 nuts on the PHM with the triangular mark and threaded posts of the processor socket; then, insert the PHM into the processor socket.

c. Rotate the anti-tilt wire bails outward until they engage with the hooks in the socket.

d. Fully tighten the nuts ***in the installation sequence shown*** on the heat-sink label. Tighten the nuts until they stop; then, visually inspect to make sure that there is no gap between the nut shoulder beneath the heat sink and the processor socket. (For reference, the torque required to fully tighten the nuts is 10 +/– 2.0 lbf-in, 1.1 +/– 0.2 N-m.)

After you finish

Complete the parts replacement. See “Complete the parts replacement” on page 341.

Demo video

Watch the procedure on YouTube

Rack latches replacement

Follow the instructions in this section to remove and install the rack latches.

The server supports the following types of rack latches. For information about connectors, buttons, and LEDs on the rack latches, see “Front view” in *User Guide* or *System Configuration Guide*.

The server supports one of the following left rack latches:		Right rack latch (with front operator panel)
Standard left rack latch	Left rack latch with USB/MiniDP	
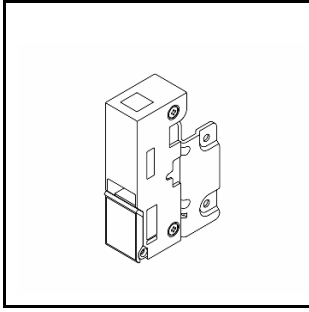	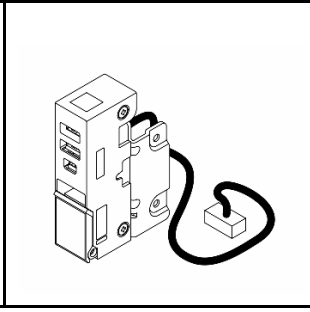	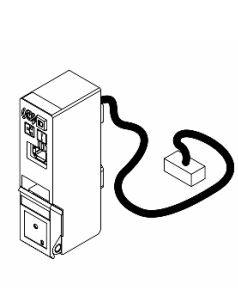

Note: This section uses the right rack latch as an example for illustration. The replacement procedure for the left rack latch is similar.

- “Remove the rack latches” on page 250
- “Install the rack latches” on page 252

Remove the rack latches

Follow the instructions in this section to remove the rack latches.

About this task

Attention:

- Read “Installation Guidelines” on page 1 and “Safety inspection checklist” on page 2 to ensure that you work safely.
- Power off the server and peripheral devices and disconnect the power cords and all external cables. See “Power off the server” on page 27.
- Prevent exposure to static electricity, which might lead to system halt and loss of data, by keeping static-sensitive components in their static-protective packages until installation, and handling these devices with an electrostatic-discharge wrist strap or other grounding system.

Procedure

Step 1. Make preparation for the task.

a. If the server is installed in a rack, slide the server out on its rack slide rails to gain access to the top cover, or remove the server from the rack. See “Server replacement” on page 34.

b. (Optional) Remove the security bezel. See “Remove the security bezel” on page 304.

c. Remove the top cover. See “Remove the top cover” on page 335.

d. Remove the air baffle. See “Remove the air baffle” on page 54.

e. Remove the system fan cage. See “Remove the system fan cage” on page 333.

Step 2. Disconnect the cable on the rack latch from the system board assembly.

Attention: To avoid damaging the system board assembly, make sure to follow the instructions in ***Internal Cable Routing Guide*** when disconnecting cables from the system board assembly.

Step 3. Remove the cable retainer.

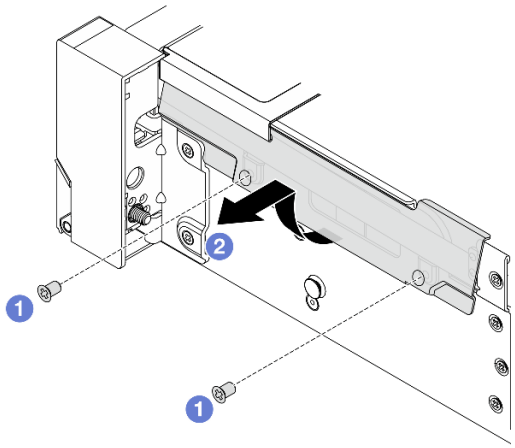

Figure 252. Removing the cable retainer

a. 1 Remove the screws that secure the cable retainer on the side of the server.

b. 2 Rotate the lower part of the cable retainer and remove it from the chassis.

Step 4. Remove the screws that secure the rack latch.

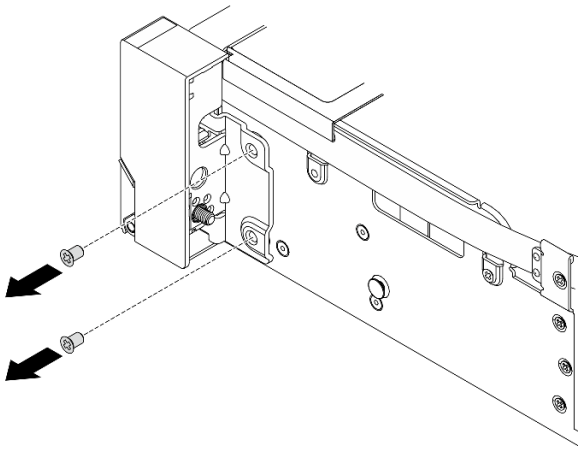

Figure 253. Removing the screws

Step 5. Slide the rack latch forward slightly and then remove the rack latch from the chassis.

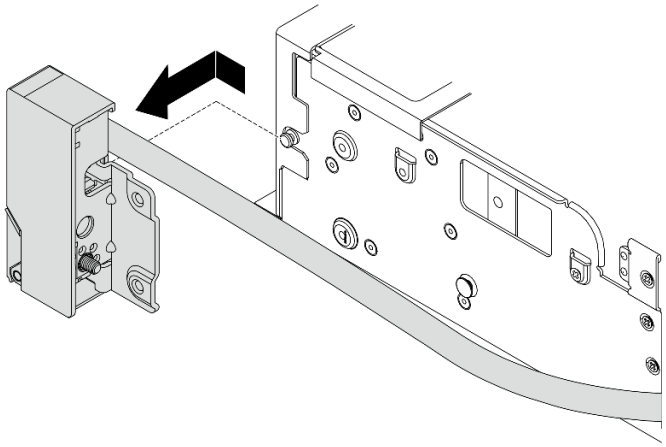

Figure 254. Removing the rack latch

After you finish

If you are instructed to return the component or optional device, follow all packaging instructions, and use any packaging materials for shipping that are supplied to you.

Demo video

Watch the procedure on YouTube

Install the rack latches

Follow the instructions in this section to install the rack latches.

About this task

Attention:

- Read “Installation Guidelines” on page 1 and “Safety inspection checklist” on page 2 to ensure that you work safely.
- Power off the server and peripheral devices and disconnect the power cords and all external cables. See “Power off the server” on page 27.
- Prevent exposure to static electricity, which might lead to system halt and loss of data, by keeping static-sensitive components in their static-protective packages until installation, and handling these devices with an electrostatic-discharge wrist strap or other grounding system.

Procedure

Step 1. Touch the static-protective package that contains the new part to any unpainted surface on the outside of the server. Then, take the new part out of the package and place it on a static-protective surface.

Step 2. Align the rack latch with the pin on the chassis. Then, press the rack latch onto the chassis and slightly slide it backward.

Note: To avoid damage to the cable, make sure that the cable is properly routed and does not cover the screw holes, as shown below.

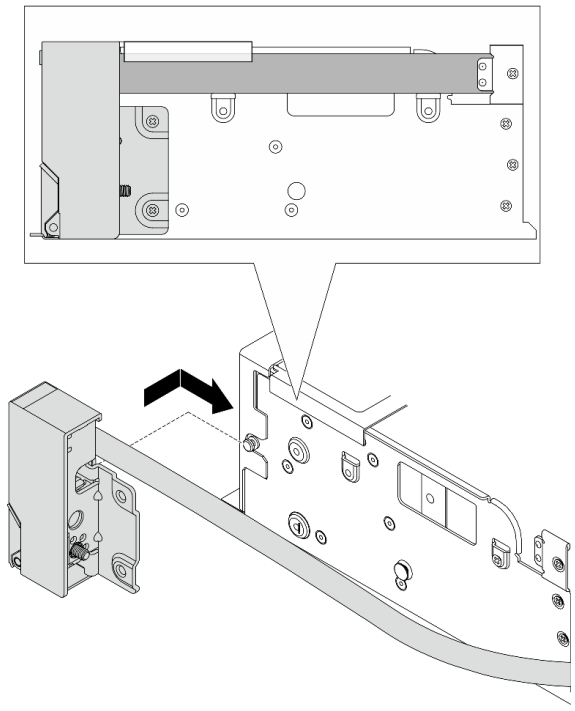

Figure 255. Installing the rack latch

Step 3. Install the screws to secure the rack latch on the side of the server.

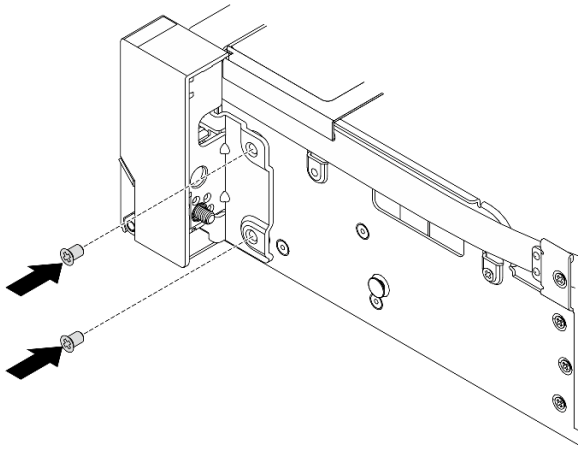

Figure 256. Installing the screws

Step 4. Install the cable retainer.

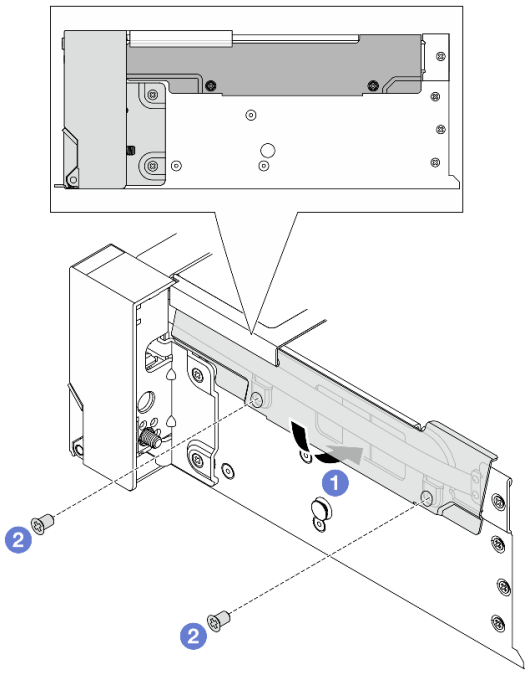

Figure 257. Installing the cable retainer

a. 1 Insert the upper part of the cable retainer into the chassis, and then rotate the lower part to install the rack latch in place.

b. 2 Install the screws to secure the cable retainer.

Step 5. Connect the cable on the rack latch to the system board assembly. See ***Internal Cable Routing Guide***.

After you finish

1. Install the system fan cage. See "Install the system fan cage" on page 334.
2. Install the air baffle. See "Install the air baffle" on page 56.
3. Complete the parts replacement. See "Complete the parts replacement" on page 341.
4. (Optional) Install the security bezel. See "Install the security bezel" on page 306.

Demo video

Watch the procedure on YouTube

RAID flash power module replacement

The RAID flash power module protects the cache memory on the installed RAID adapter. Follow the instructions in this section to remove and install a RAID flash power module (also called supercap).

The location of RAID flash power modules varies by the server hardware configurations.

Table 17. Location of RAID flash power modules

Figure 258. On the standard air baffle 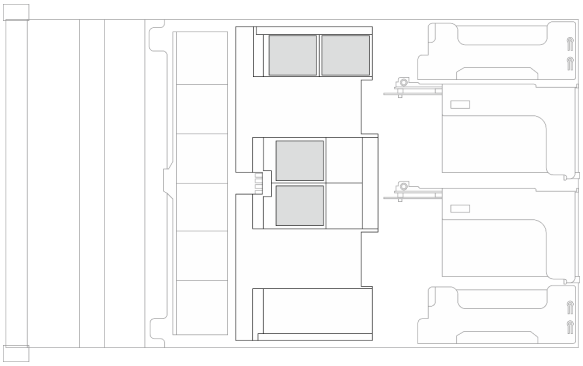	*Figure 259. On the GPU air baffle* 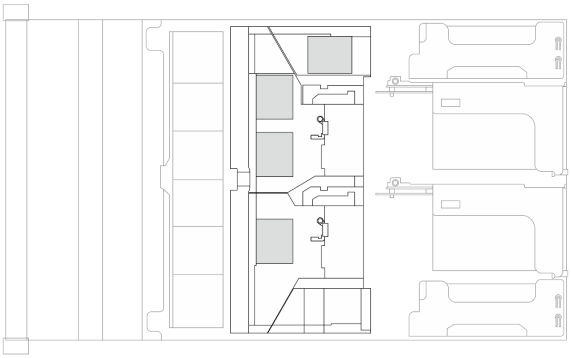
Figure 260. On the 2.5-inch middle drive cage 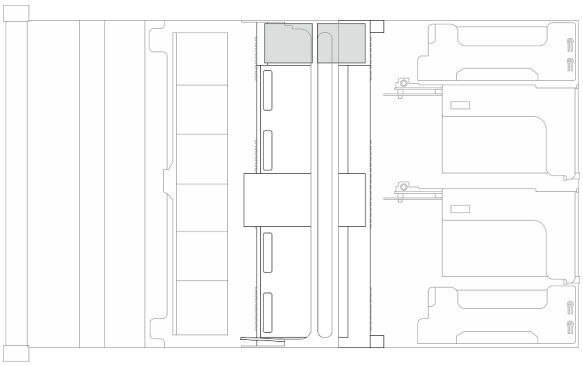	

- “Remove a RAID flash power module from the air baffle” on page 255
- “Install a RAID flash power module on the air baffle” on page 256
- “Remove a RAID flash power module from the middle drive cage” on page 258
- “Install a RAID flash power module on the middle drive cage” on page 259

Remove a RAID flash power module from the air baffle

Follow the instructions in this section to remove a RAID flash power module from the air baffle.

About this task

Attention:

- Read “Installation Guidelines” on page 1 and “Safety inspection checklist” on page 2 to ensure that you work safely.
- Power off the server and peripheral devices and disconnect the power cords and all external cables. See “Power off the server” on page 27.
- Prevent exposure to static electricity, which might lead to system halt and loss of data, by keeping static-sensitive components in their static-protective packages until installation, and handling these devices with an electrostatic-discharge wrist strap or other grounding system.

- Before you remove any component of a RAID array (drive, RAID card, etc.), back up all RAID configuration information.

Procedure

Step 1. Make preparation for the task.

a. If the server is installed in a rack, slide the server out on its rack slide rails to gain access to the top cover, or remove the server from the rack. See “Server replacement” on page 34.

b. Remove the top cover. See “Remove the top cover” on page 335.

c. Disconnect the cable of the RAID flash power module.

Step 2. Remove the RAID flash power module from the air baffle.

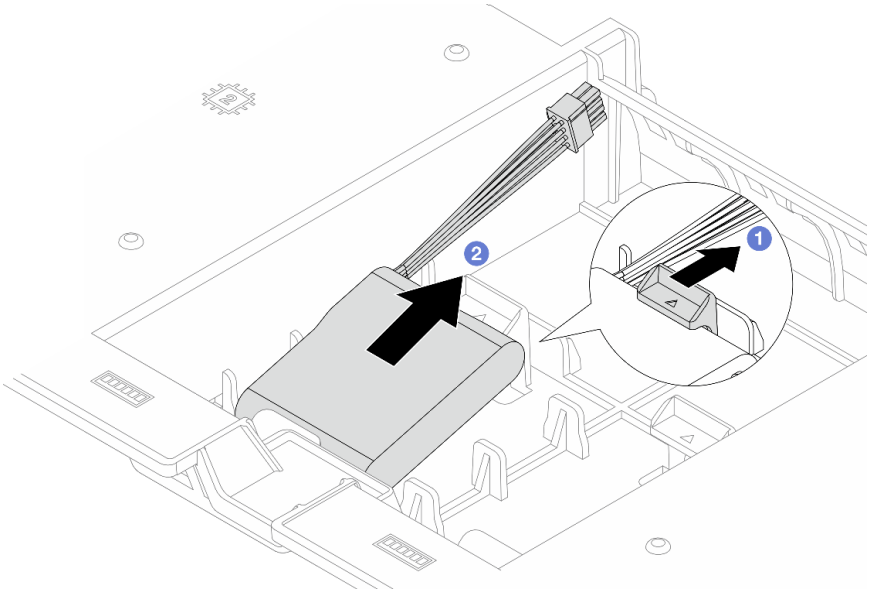

Figure 261. Removing the RAID flash power module from the air baffle

a. 1 Open the retention clip on the holder of the RAID flash power module.

b. 2 Take the RAID flash power module out of the holder.

After you finish

If you are instructed to return the component or optional device, follow all packaging instructions, and use any packaging materials for shipping that are supplied to you.

Demo video

Watch the procedure on YouTube

Install a RAID flash power module on the air baffle

Follow the instructions in this section to install a RAID flash power module on the air baffle.

About this task

Attention:

- Read “Installation Guidelines” on page 1 and “Safety inspection checklist” on page 2 to ensure that you work safely.
- Power off the server and peripheral devices and disconnect the power cords and all external cables. See “Power off the server” on page 27.
- Prevent exposure to static electricity, which might lead to system halt and loss of data, by keeping static-sensitive components in their static-protective packages until installation, and handling these devices with an electrostatic-discharge wrist strap or other grounding system.

Procedure

Step 1. Touch the static-protective package that contains the new part to any unpainted surface on the outside of the server. Then, take the new part out of the package and place it on a static-protective surface.

Step 2. Install the RAID flash power module.

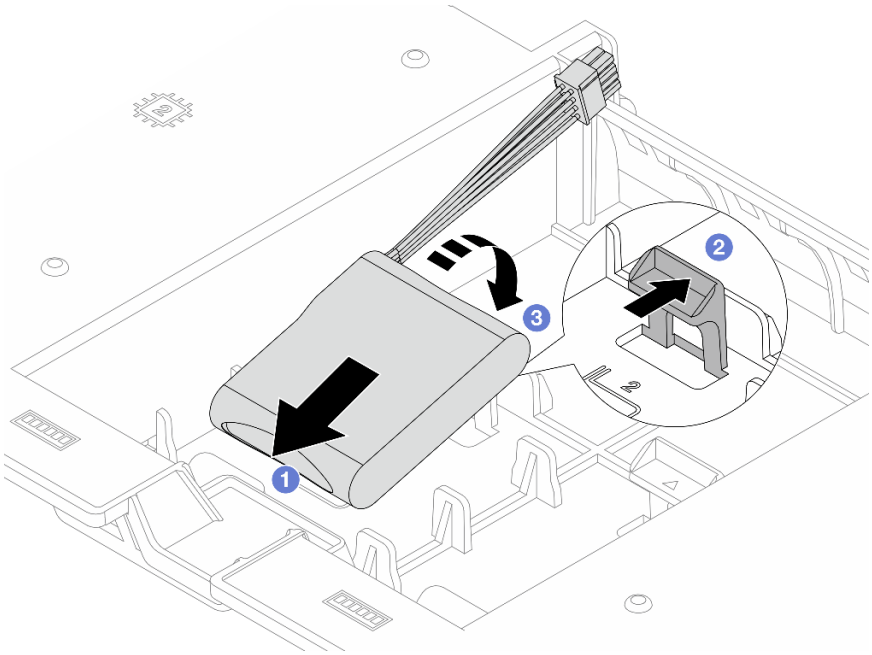

Figure 262. Installing the RAID flash power module on the air baffle

a. 1 Put a RAID flash power module into the holder.

b. 2 Open the retention clip on the holder.

c. 3 Press the RAID flash power module down to secure it into the holder.

Step 3. Connect the RAID flash power module to an adapter with the extension cable that comes with the RAID flash power module. See ***Internal Cable Routing Guide***.

After you finish

Complete the parts replacement. See “Complete the parts replacement” on page 341.

Demo video

Watch the procedure on YouTube

Remove a RAID flash power module from the middle drive cage

Follow the instructions in this section to remove a RAID flash power module from the 2.5-inch middle drive cage.

About this task

Attention:

- Read “Installation Guidelines” on page 1 and “Safety inspection checklist” on page 2 to ensure that you work safely.
- Power off the server and peripheral devices and disconnect the power cords and all external cables. See “Power off the server” on page 27.
- Prevent exposure to static electricity, which might lead to system halt and loss of data, by keeping static-sensitive components in their static-protective packages until installation, and handling these devices with an electrostatic-discharge wrist strap or other grounding system.
- Before you remove any component of a RAID array (drive, RAID card, etc.), back up all RAID configuration information.

Procedure

Step 1. Make preparation for the task.

a. If the server is installed in a rack, slide the server out on its rack slide rails to gain access to the top cover, or remove the server from the rack. See “Server replacement” on page 34.

b. Remove the top cover. See “Remove the top cover” on page 335.

Step 2. Open the drive cage handle.

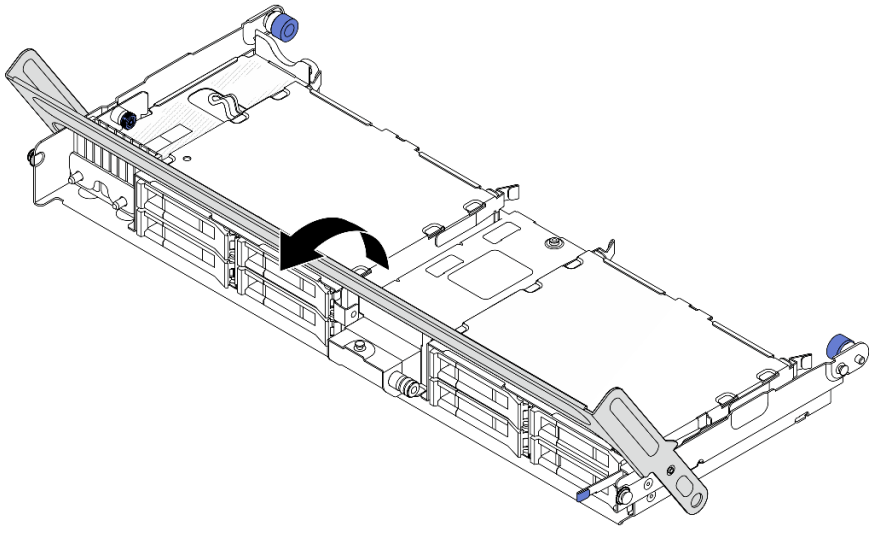

Figure 263. Opening the handle of the middle drive cage

Step 3. Remove the rubber on the cover of the holder.

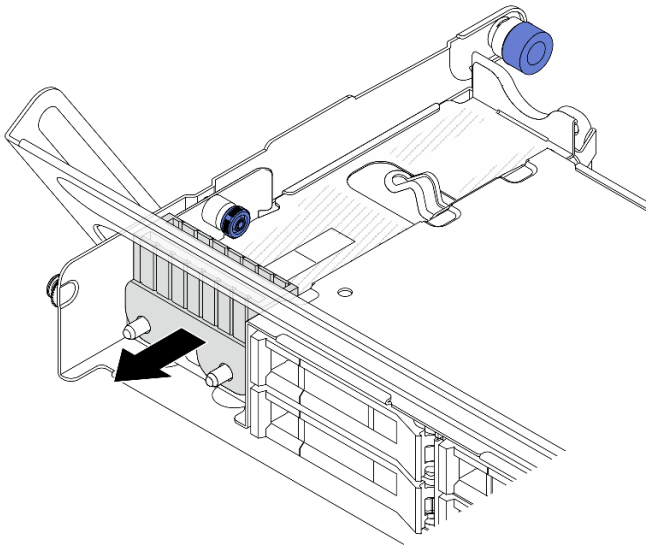

Figure 264. Removing the rubber

Step 4. Remove the RAID flash power module.

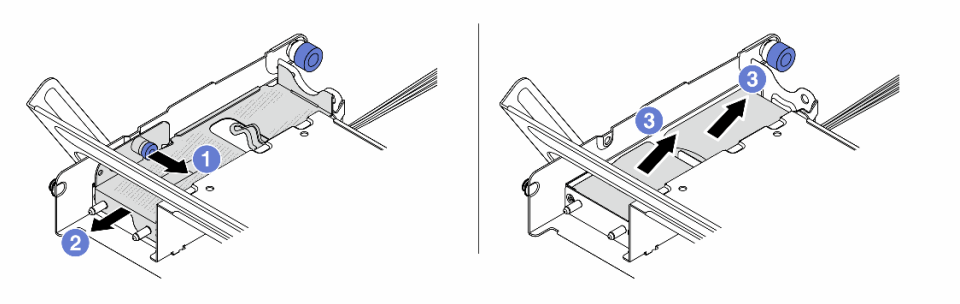

Figure 265. Removing the RAID flash power module from the middle drive cage

a. 1 Pull out the blue latch on the cover.
b. 2 Slide the cover out of the holder, and disconnect the cable of the RAID flash power module.
c. 3 Take the RAID flash power module out of the holder.

After you finish

If you are instructed to return the component or optional device, follow all packaging instructions, and use any packaging materials for shipping that are supplied to you.

Demo video

Watch the procedure on YouTube

Install a RAID flash power module on the middle drive cage

Follow the instructions in this section to install a RAID flash power module on the 2.5-inch middle drive cage.

About this task

Attention:

- Read “Installation Guidelines” on page 1 and “Safety inspection checklist” on page 2 to ensure that you work safely.
- Power off the server and peripheral devices and disconnect the power cords and all external cables. See “Power off the server” on page 27.
- Prevent exposure to static electricity, which might lead to system halt and loss of data, by keeping static-sensitive components in their static-protective packages until installation, and handling these devices with an electrostatic-discharge wrist strap or other grounding system.

Procedure

Step 1. Touch the static-protective package that contains the new part to any unpainted surface on the outside of the server. Then, take the new part out of the package and place it on a static-protective surface.

Step 2. Install the RAID flash power module.

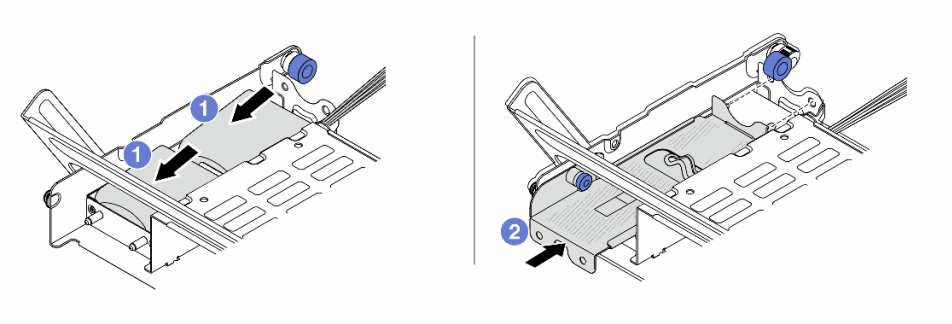

Figure 266. Installing the RAID flash power module on the middle drive cage

a. 1 Put a RAID flash power module into the holder, and press it down to secure it into the holder. Connect the extension cable.

b. 2 Align the holes in the metal cover with the pins on the holder, pull out the blue latch on the cover, and slide the cover into the holder until the pins pass through the holes. Then, release the blue latch to lock the cover into place.

Step 3. Install the rubber onto the cover of the holder.

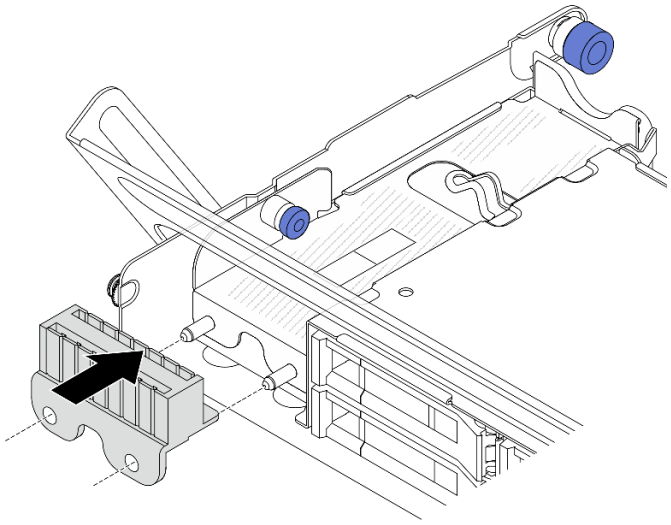

Figure 267. Installing the rubber

Step 4. Press the latch as shown and close the handle.

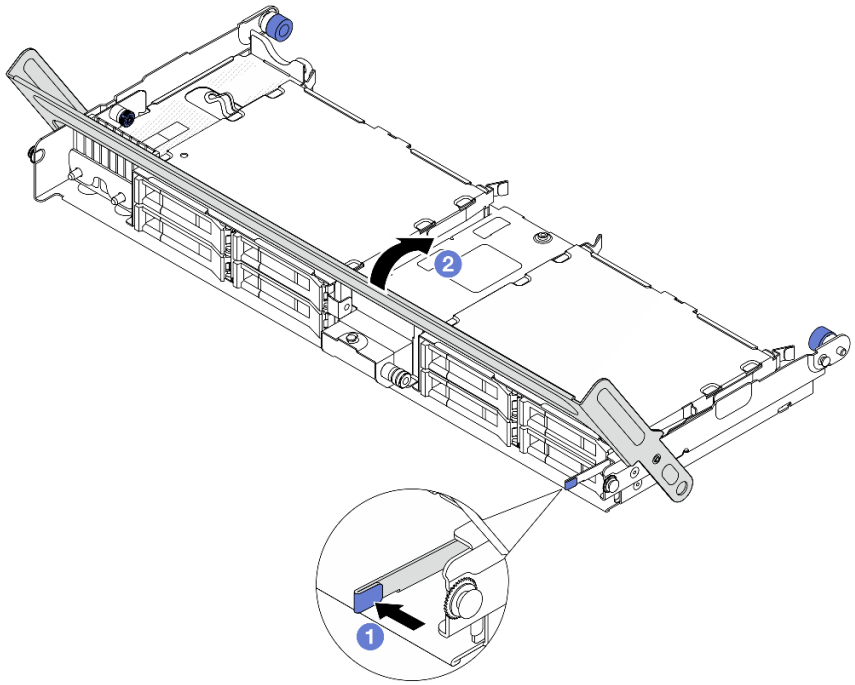

Figure 268. Closing the drive cage handle

Step 5. Connect the extension cable of the RAID flash power module to an adapter. See ***Internal Cable Routing Guide***.

After you finish

Complete the parts replacement. See "Complete the parts replacement" on page 341.

Demo video

Watch the procedure on YouTube

Rearwall bracket replacement

Follow the instructions in this section to remove and install a rearwall bracket.

The rearwall brackets vary by server rear configurations.

- “Remove a rearwall bracket” on page 263
- “Install a rearwall bracket” on page 265

Note: This section contains only replacement steps of the left, middle, and right rearwall brackets. For installation steps of other types of rearwall brackets, see “Rear drive cage replacement” on page 271.

Rearwall bracket matrix

Server rear config.	**Required rearwall brackets**		
Configuration with 10 PCIe slots	Left rearwall bracket 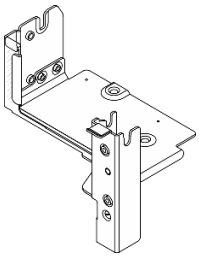	Middle rearwall bracket 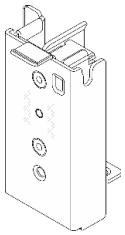	Right rearwall bracket 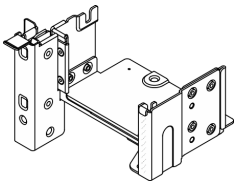
Configuration with 4 x 2.5-inch rear drives	Left rearwall bracket 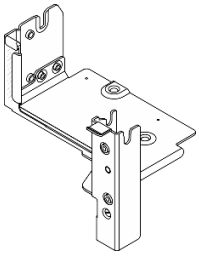	Rearwall bracket B (type 1) 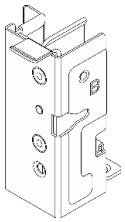	Rearwall bracket C 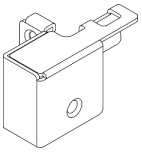

Server rear config.	Required rearwall brackets		
Configuration with 8 x 2.5-inch rear drives	Rearwall bracket A 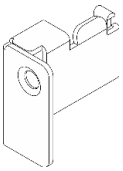	Rearwall bracket B (type 2) 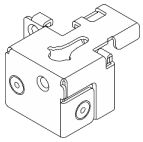	Rearwall bracket C 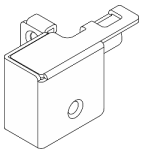
Configuration with 4 x 3.5-inch rear drives	Rearwall bracket A 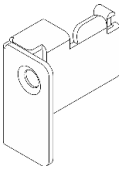 Rearwall bracket 2 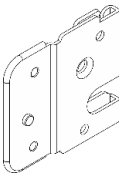	Rearwall bracket B (type 2) 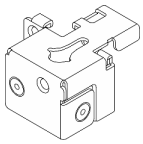	Rearwall bracket C 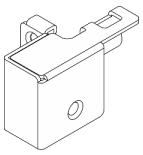 Rearwall bracket 1 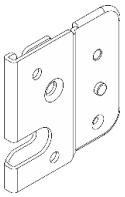

Remove a rearwall bracket

Follow the instructions in this section to remove a rearwall bracket.

About this task

Attention:

- Read “Installation Guidelines” on page 1 and “Safety inspection checklist” on page 2 to ensure that you work safely.
- Power off the server and peripheral devices and disconnect the power cords and all external cables. See “Power off the server” on page 27.

Procedure

Step 1. Make preparation for the task.

a. If the server is installed in a rack, slide the server out on its rack slide rails to gain access to the top cover, or remove the server from the rack. See “Server replacement” on page 34.

b. Remove the top cover. See “Remove the top cover” on page 335.

c. Remove the rear riser assemblies or rear drive assembly.

- “Rear riser assembly and PCIe adapter replacement” on page 289
- “Rear drive cage replacement” on page 271

Step 2. Remove the rearwall bracket.

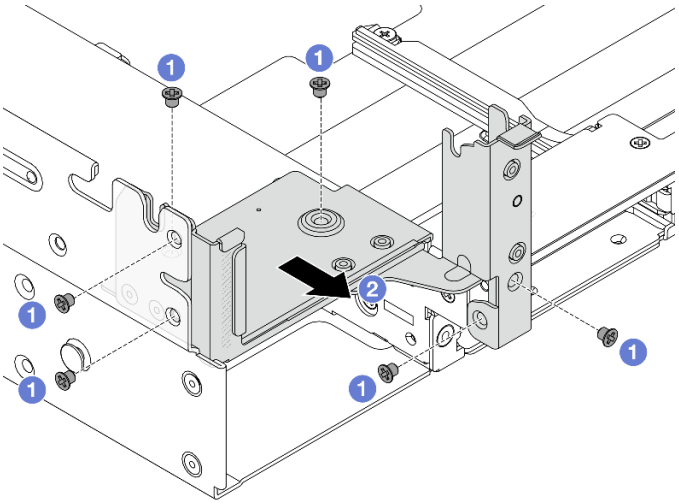

Figure 269. Removing the left rearwall bracket

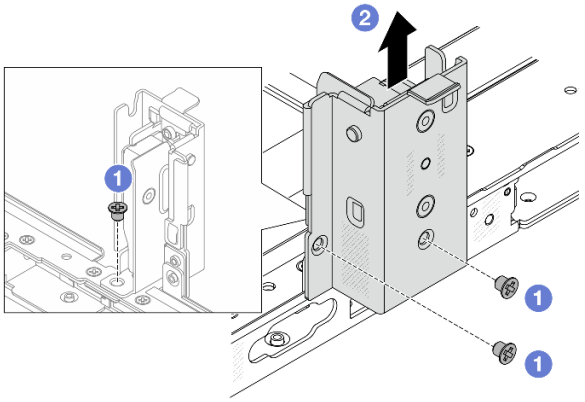

Figure 270. Removing the middle rearwall bracket

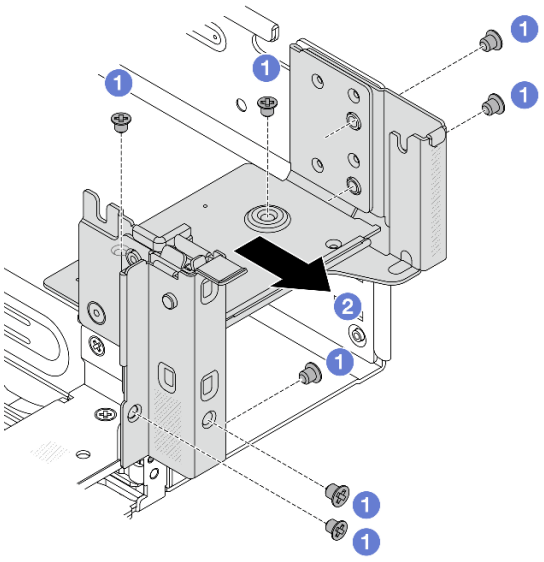

Figure 271. Removing the right rearwall bracket

a. 1 Remove the screws.
b. 2 Remove the bracket from the chassis as shown.

After you finish

1. Install required rearwall brackets back to the rear chassis.
2. If you are instructed to return the component or optional device, follow all packaging instructions, and use any packaging materials for shipping that are supplied to you.

Install a rearwall bracket

Follow the instructions in this section to install a rearwall bracket.

About this task

Attention:

- Read “Installation Guidelines” on page 1 and “Safety inspection checklist” on page 2 to ensure that you work safely.
- Power off the server and peripheral devices and disconnect the power cords and all external cables. See “Power off the server” on page 27.

Procedure

Step 1. Install the rearwall brackets.

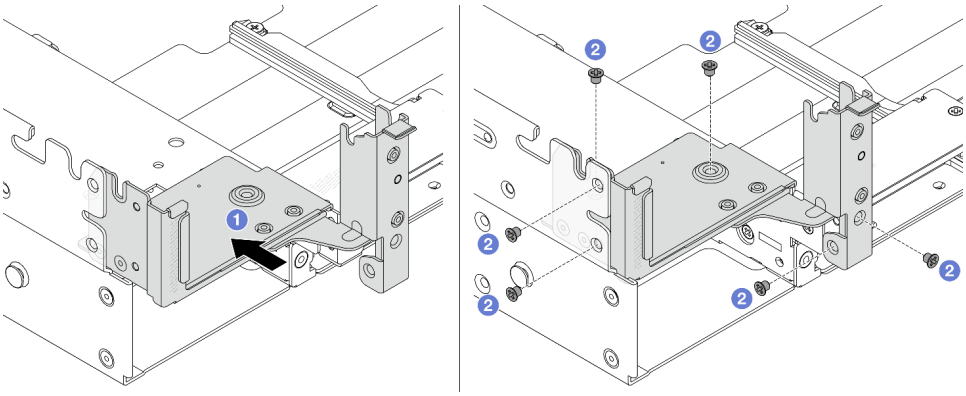

Figure 272. Installing the left rearwall bracket

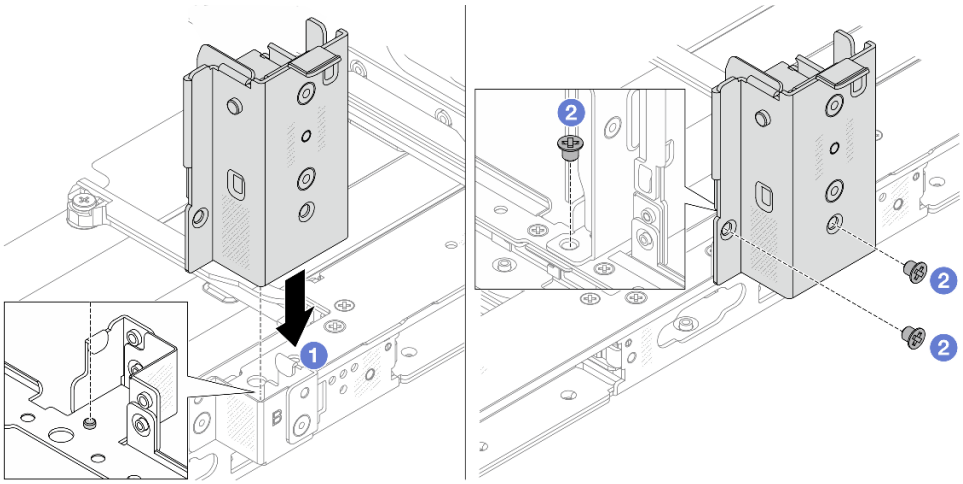

Figure 273. Installing the middle rearwall bracket

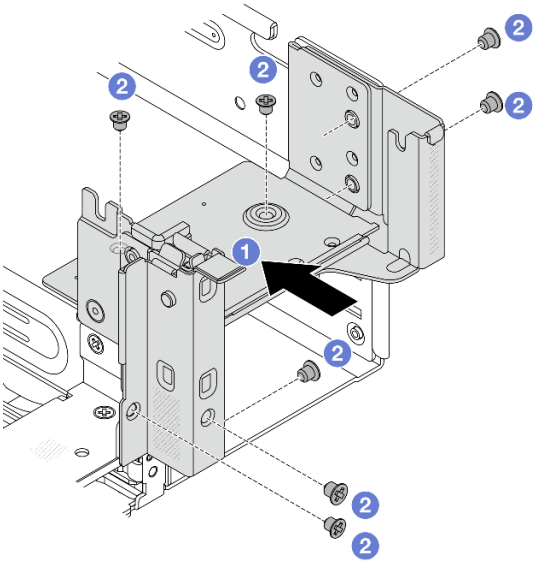

Figure 274. Installing the right rearwall bracket

a. (1) Align the rearwall bracket with the chassis, and insert the bracket into place.

b. (2) Install the screws to secure the rearwall bracket.

After you finish

1. Install a rear drive assembly or riser assemblies.
   - “Rear riser assembly and PCIe adapter replacement” on page 289
   - “Rear drive cage replacement” on page 271
2. Complete the parts replacement. See “Complete the parts replacement” on page 341.

Rear drive backplane replacement

Follow the instructions in this section to remove and install the 4 x 2.5", 8 x 2.5", or 4 x 3.5" rear drive backplane.

- “Remove the rear drive backplane” on page 267
- “Install the rear drive backplane” on page 269

Remove the rear drive backplane

Follow the instructions in this section to remove the 4 x 2.5", 8 x 2.5", or 4 x 3.5" rear drive backplane.

About this task

Attention:

- Read “Installation Guidelines” on page 1 and “Safety inspection checklist” on page 2 to ensure that you work safely.
- Power off the server and peripheral devices and disconnect the power cords and all external cables. See “Power off the server” on page 27.
- Prevent exposure to static electricity, which might lead to system halt and loss of data, by keeping static-sensitive components in their static-protective packages until installation, and handling these devices with an electrostatic-discharge wrist strap or other grounding system.
- Before you remove or make changes to drives, drive controllers (including controllers that are integrated on the system board assembly), drive backplanes or drive cables, back up all important data that is stored on drives.
- Before you remove any component of a RAID array (drive, RAID card, etc.), back up all RAID configuration information.
- If one or more NVMe solid-state drives are to be removed, it is recommended to disable them beforehand via the operating system.

Procedure

Step 1. Make preparation for the task.

a. If the server is installed in a rack, slide the server out on its rack slide rails to gain access to the top cover, or remove the server from the rack. See “Server replacement” on page 34.

b. Remove the top cover. See “Remove the top cover” on page 335.

c. Disconnect cables from the rear drive backplane.

d. Remove all the installed drives and fillers (if any) from the drive bays. See “Remove a 2.5-inch or 3.5-inch hot-swap drive” on page 50.

Step 2. Remove the rear drive backplane.

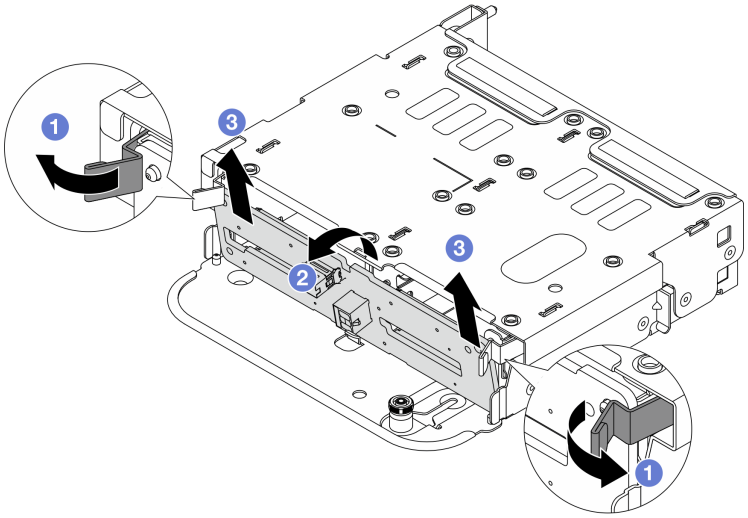

Figure 275. Removing the 4 x 2.5" rear drive backplane

a. 1 Open the release latches as shown.
b. 2 Rotate the backplane from the top to disengage it from the pins on the drive cage.
c. 3 Carefully lift the backplane out of the drive cage.

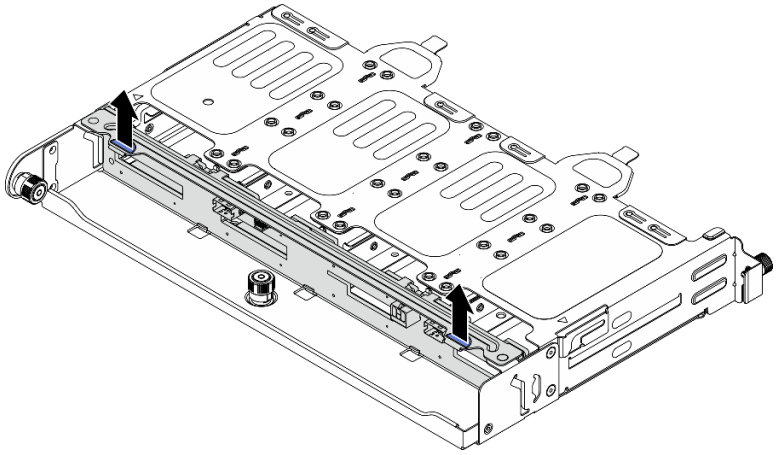

Figure 276. Removing the 8 x 2.5" rear drive backplane

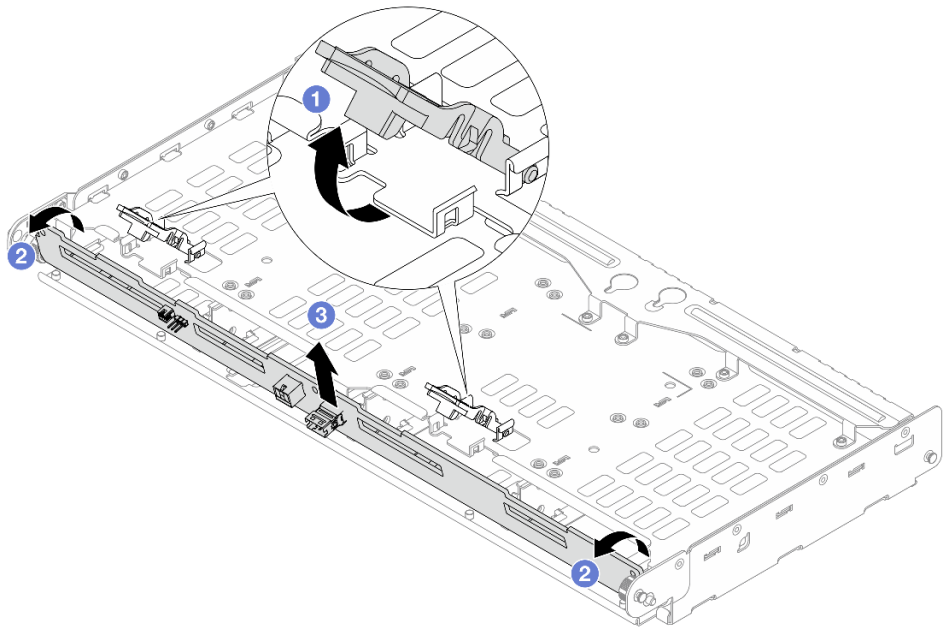

Figure 277. Removing the 4 x 3.5" rear drive backplane

a. 1 Open the release latches as shown.

b. 2 Rotate the backplane from the top to disengage it from the pins on the drive cage.

c. 3 Carefully lift the backplane out of the drive cage.

After you finish

If you are instructed to return the component or optional device, follow all packaging instructions, and use any packaging materials for shipping that are supplied to you.

Demo video

Watch the procedure on YouTube

Install the rear drive backplane

Follow the instructions in this section to install the 4 x 2.5", 8 x 2.5", or 4 x 3.5" rear drive backplane.

About this task

Attention:

- Read “Installation Guidelines” on page 1 and “Safety inspection checklist” on page 2 to ensure that you work safely.
- Power off the server and peripheral devices and disconnect the power cords and all external cables. See “Power off the server” on page 27.
- Prevent exposure to static electricity, which might lead to system halt and loss of data, by keeping static-sensitive components in their static-protective packages until installation, and handling these devices with an electrostatic-discharge wrist strap or other grounding system.

Procedure

Step 1. Touch the static-protective package that contains the new part to any unpainted surface on the outside of the server. Then, take the new part out of the package and place it on a static-protective surface.

Step 2. Install the rear drive backplane.

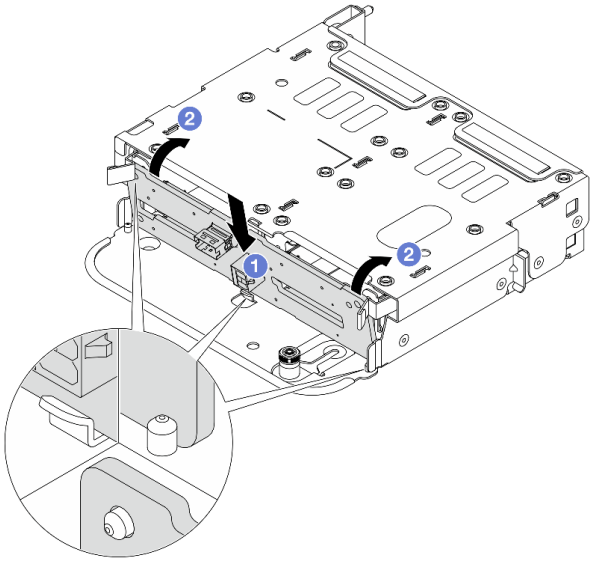

Figure 278. Installing the 4 x 2.5" rear drive backplane

a. 1 Align the bottom of the backplane with the studs at the bottom of the drive cage, and lower the backplane into the drive cage.

b. 2 Push the top of the backplane so that the holes in the backplane pass through the pins on the drive cage, and the release latches secure the backplane in place.

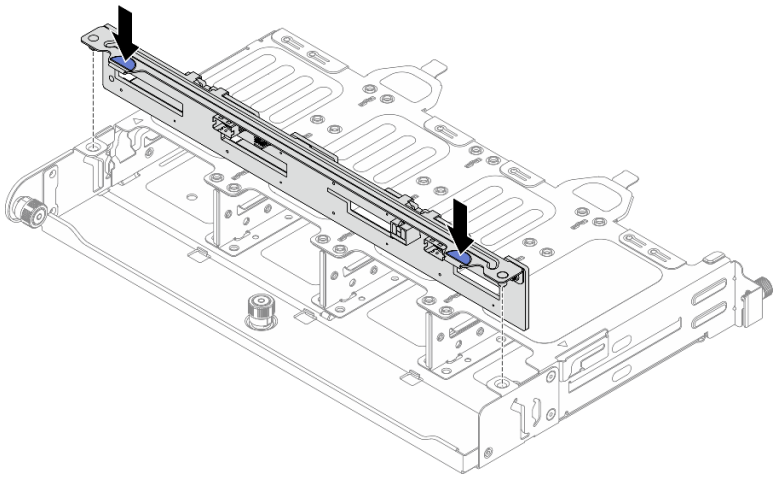

Figure 279. Installing the 8 x 2.5" rear drive backplane

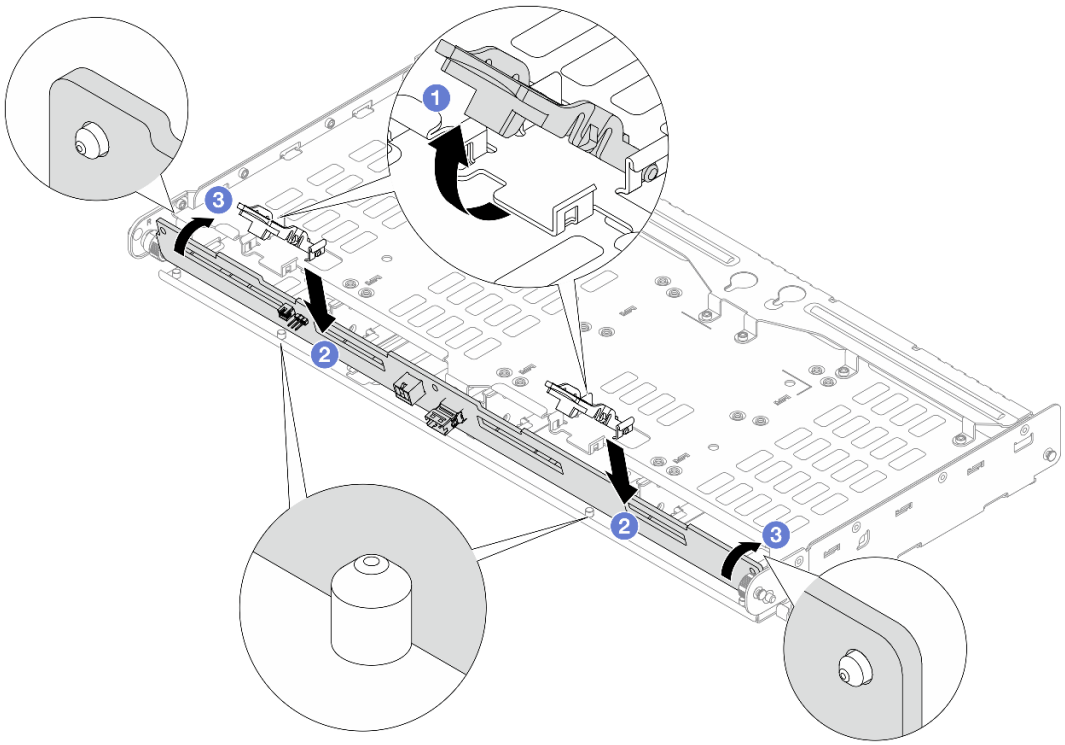

Figure 280. Installing the 4 x 3.5" rear drive backplane

a. 1 Make sure that the release latches are opened.

b. 2 Align the bottom of the backplane with the studs at the bottom of the drive cage and lower the backplane into the drive cage.

c. 3 Push the top of the backplane so that the holes in the backplane pass through the pins on the drive cage, and the release latches secure the backplane in place.

Step 3. Connect cables to the rear drive backplane. See ***Internal Cable Routing Guide***.

After you finish

1. Reinstall the drives or drive fillers into the rear drive cage. See “Install a 2.5-inch or 3.5-inch hot-swap drive” on page 52.
2. Complete the parts replacement. See “Complete the parts replacement” on page 341.

Demo video

Watch the procedure on YouTube

Rear drive cage replacement

Follow the instructions in this section to remove and install the 4 x 2.5", 8 x 2.5", or 4 x 3.5" rear drive cage.

- “Remove the 4 x 2.5" rear drive cage” on page 272
- “Install the 4 x 2.5" rear drive cage” on page 273
- “Remove the 8 x 2.5" rear drive cage” on page 275
- “Install the 8 x 2.5" rear drive cage” on page 277

- “Remove the 4 x 3.5" rear drive cage” on page 280
- “Install the 4 x 3.5" rear drive cage” on page 281

Remove the 4 x 2.5" rear drive cage

Follow the instructions in this section to remove the 4 x 2.5" rear drive cage.

About this task

Attention:

- Read “Installation Guidelines” on page 1 and “Safety inspection checklist” on page 2 to ensure that you work safely.
- Power off the server and peripheral devices and disconnect the power cords and all external cables. See “Power off the server” on page 27.
- Prevent exposure to static electricity, which might lead to system halt and loss of data, by keeping static-sensitive components in their static-protective packages until installation, and handling these devices with an electrostatic-discharge wrist strap or other grounding system.
- Before you remove or make changes to drives, drive controllers (including controllers that are integrated on the system board assembly), drive backplanes or drive cables, back up all important data that is stored on drives.
- Before you remove any component of a RAID array (drive, RAID card, etc.), back up all RAID configuration information.
- If one or more NVMe solid-state drives are to be removed, it is recommended to disable them beforehand via the operating system.

Procedure

Step 1. Make preparation for the task.

a. If the server is installed in a rack, slide the server out on its rack slide rails to gain access to the top cover, or remove the server from the rack. See “Server replacement” on page 34.

b. Remove the top cover. See “Remove the top cover” on page 335.

c. Disconnect cables from the rear drive backplane.

d. Remove all the installed drives and fillers (if any) from the drive bays. See “Remove a 2.5-inch or 3.5-inch hot-swap drive” on page 50.

Step 2. Remove the rear drive cage.

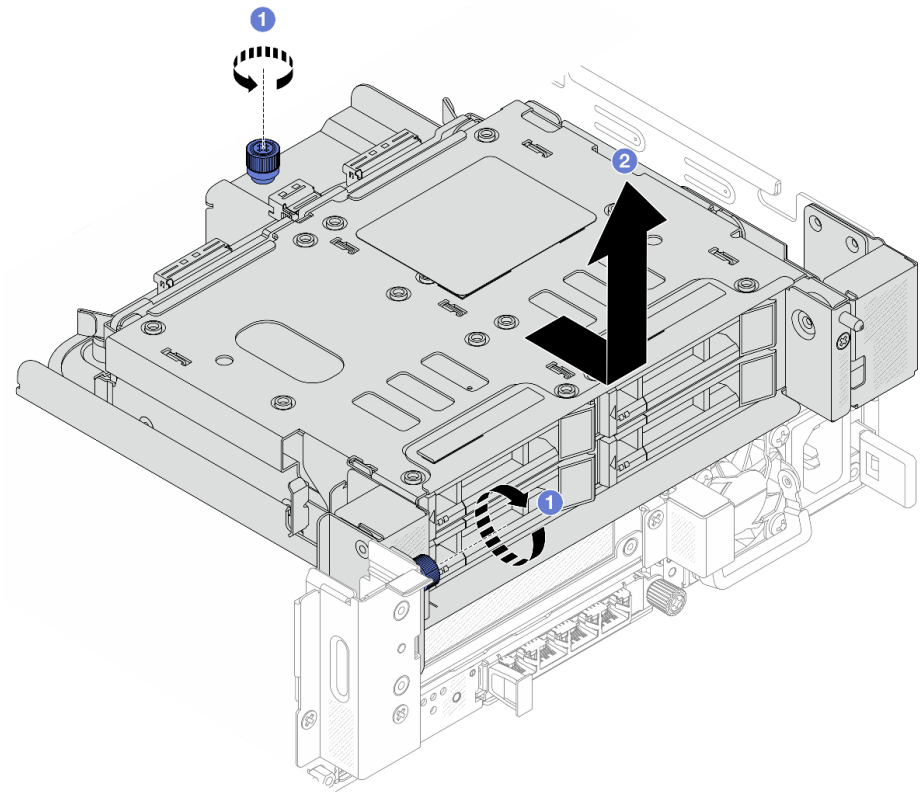

Figure 281. Removing the 4 x 2.5" rear drive cage

a. 1 Loosen the screws.

b. 2 Slide the drive cage towards the rear of the chassis to release it, and then lift the drive cage out of the chassis.

Step 3. Remove the 4 x 2.5" rear drive backplane. See “Remove the rear drive backplane” on page 267.

After you finish

If you are instructed to return the component or optional device, follow all packaging instructions, and use any packaging materials for shipping that are supplied to you.

Demo video

Watch the procedure on YouTube

Install the 4 x 2.5" rear drive cage

Follow the instructions in this section to install the 4 x 2.5" rear drive cage.

About this task

Attention:

- Read “Installation Guidelines” on page 1 and “Safety inspection checklist” on page 2 to ensure that you work safely.

- Power off the server and peripheral devices and disconnect the power cords and all external cables. See “Power off the server” on page 27.
- Prevent exposure to static electricity, which might lead to system halt and loss of data, by keeping static-sensitive components in their static-protective packages until installation, and handling these devices with an electrostatic-discharge wrist strap or other grounding system.
- The rear drive cage is supported on some server models with thermal requirements. See “Thermal rules” on page 17 to ensure that the server is under permitted ambient temperature and the correct heat sink and system fans are used. If needed, replace your heat sink or system fan first.
  - “Processor and heat sink replacement (trained technician only)” on page 236
  - “System fan replacement” on page 329

Procedure

Step 1. Touch the static-protective package that contains the new part to any unpainted surface on the outside of the server. Then, take the new part out of the package and place it on a static-protective surface.

Step 2. (Optional) Install the required rearwall brackets.

Note: For the required rearwall brackets, see “Rearwall bracket replacement” on page 262.

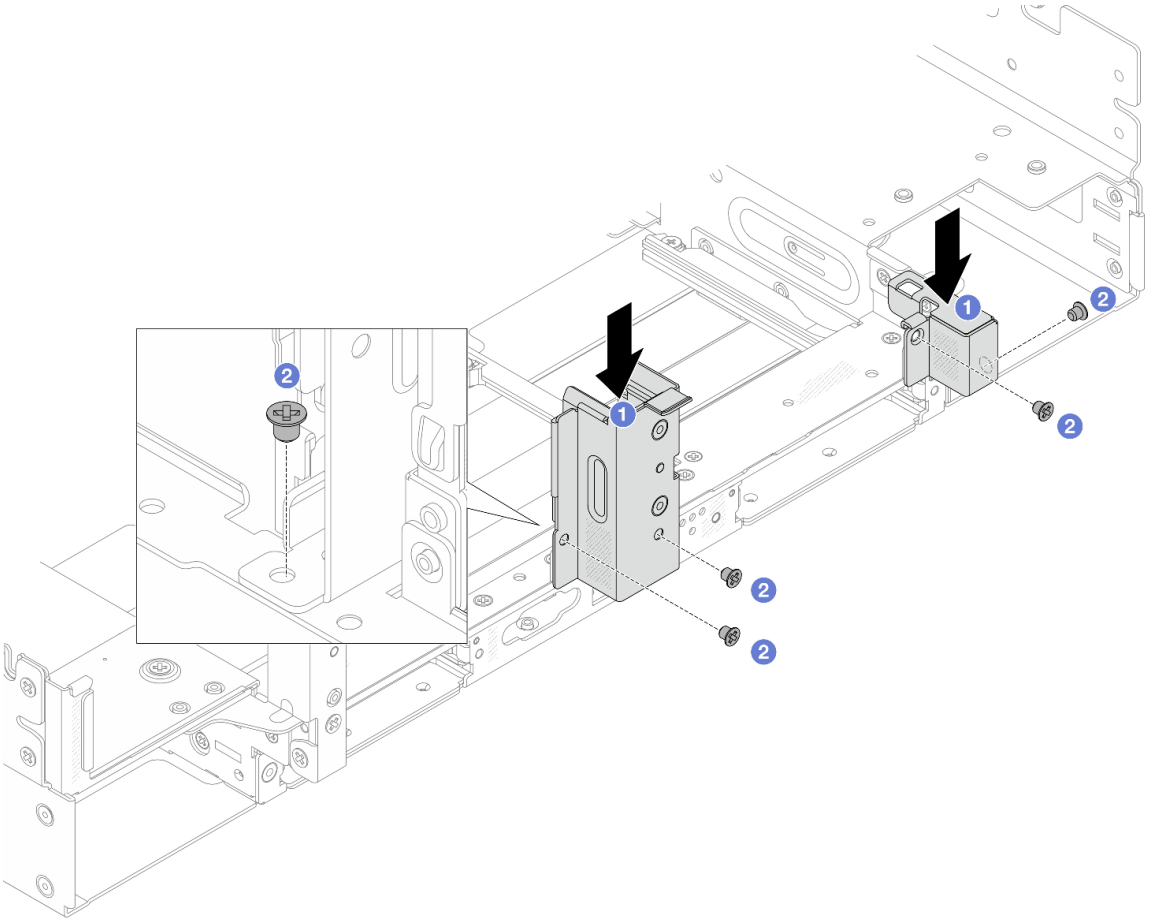

Figure 282. Installing rearwall brackets for the 4 x 2.5" rear drive cage

a. 1 Align the rearwall brackets with the chassis, and insert the brackets into place.

b. 2 Install the screws to secure the rearwall brackets.

Step 3. Install the 4 x 2.5" rear drive backplane. See “Install the rear drive backplane” on page 269.

Step 4. Install the rear drive cage.

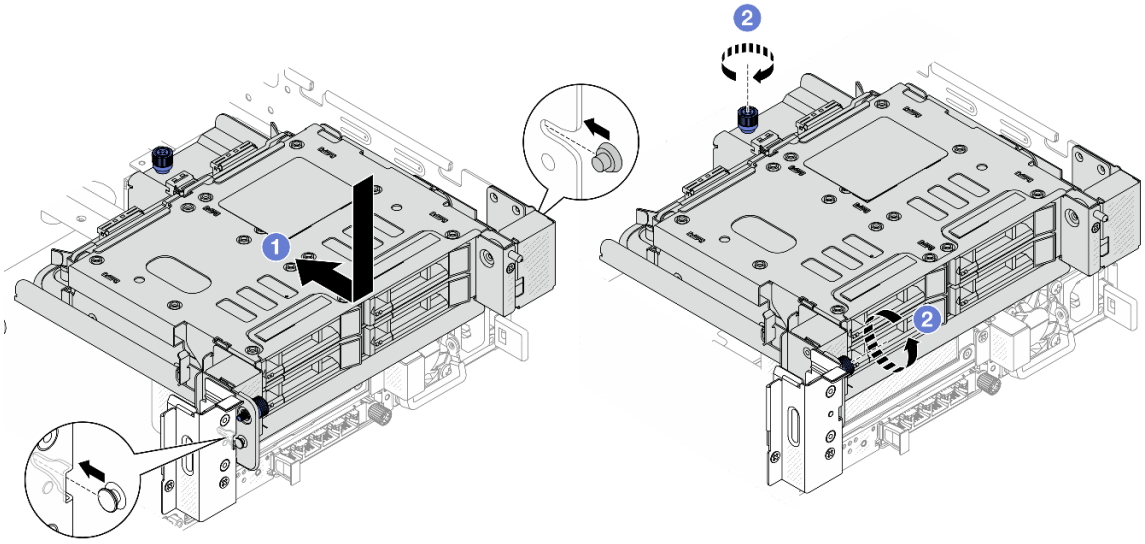

Figure 283. Installing the 4 x 2.5" rear drive cage

a. 1 Lower the drive cage into the chassis, and move the drive cage forward until it clicks into position.

b. 2 Tighten the screws to secure the drive cage.

Step 5. Connect cables to the rear drive backplane. See ***Internal Cable Routing Guide***.

After you finish

1. Reinstall the drives or drive fillers into the rear drive cage. See “Install a 2.5-inch or 3.5-inch hot-swap drive” on page 52.
2. Complete the parts replacement. See “Complete the parts replacement” on page 341.

Demo video

Watch the procedure on YouTube

Remove the 8 x 2.5" rear drive cage

Follow the instructions in this section to remove the 8 x 2.5" rear drive cage.

About this task

Attention:

- Read “Installation Guidelines” on page 1 and “Safety inspection checklist” on page 2 to ensure that you work safely.
- Power off the server and peripheral devices and disconnect the power cords and all external cables. See “Power off the server” on page 27.

- Prevent exposure to static electricity, which might lead to system halt and loss of data, by keeping static-sensitive components in their static-protective packages until installation, and handling these devices with an electrostatic-discharge wrist strap or other grounding system.
- Before you remove or make changes to drives, drive controllers (including controllers that are integrated on the system board assembly), drive backplanes or drive cables, back up all important data that is stored on drives.
- Before you remove any component of a RAID array (drive, RAID card, etc.), back up all RAID configuration information.
- If one or more NVMe solid-state drives are to be removed, it is recommended to disable them beforehand via the operating system.

Procedure

Step 1. Make preparation for the task.

a. If the server is installed in a rack, slide the server out on its rack slide rails to gain access to the top cover, or remove the server from the rack. See "Server replacement" on page 34.

b. Remove the top cover. See "Remove the top cover" on page 335.

c. Disconnect cables from the rear drive backplane.

d. Remove all the installed drives and fillers (if any) from the drive bays. See "Remove a 2.5-inch or 3.5-inch hot-swap drive" on page 50.

Step 2. Remove the rear drive cage.

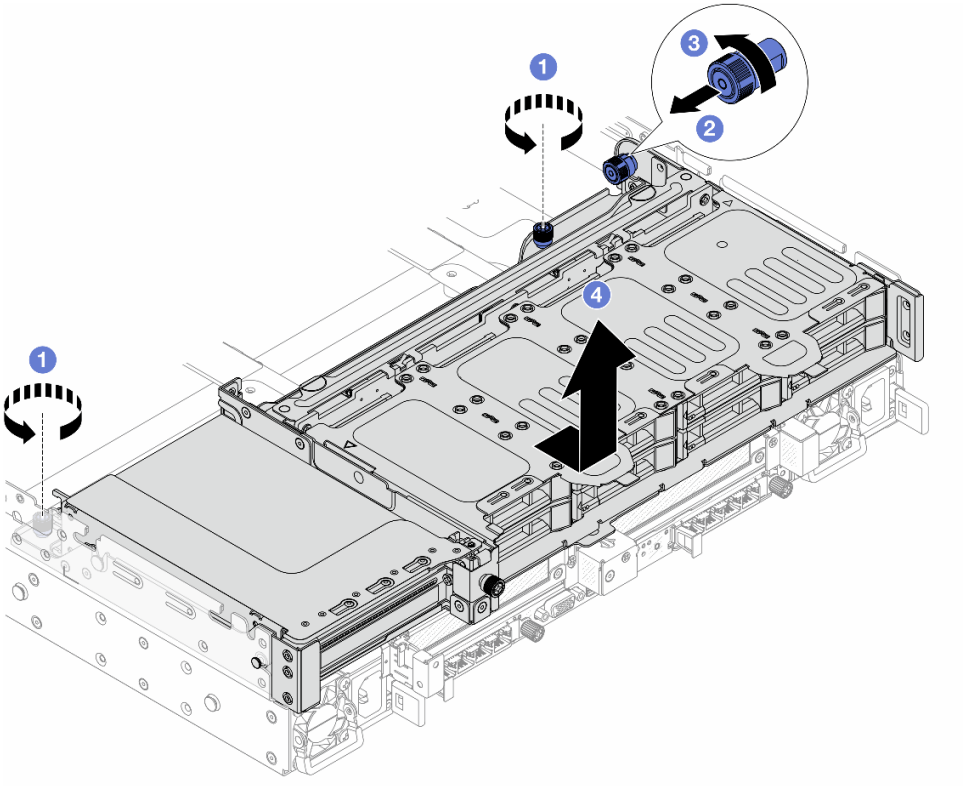

Figure 284. Removing the 8 x 2.5" rear drive cage

a. 1 Loosen the screws.

b. 2 Pull out the blue plunger.

c. 3 Twist the blue plunger to keep it unlocked.

d. 4 Slide the drive cage towards the rear of the chassis to release it, and then lift the drive cage out of the chassis.

Step 3. Hold the backplane and carefully lift the backplane out of the drive cage.

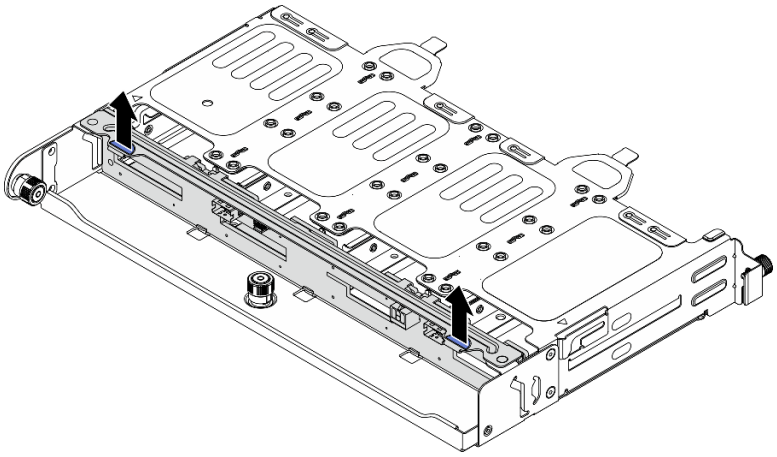

Figure 285. Removing the 8 x 2.5" rear drive backplane

Step 4. (Optional) Remove the 2FH riser assembly. See Remove a rear riser assembly.

After you finish

If you are instructed to return the component or optional device, follow all packaging instructions, and use any packaging materials for shipping that are supplied to you.

Demo video

Watch the procedure on YouTube

Install the 8 x 2.5" rear drive cage

Follow the instructions in this section to install the 8 x 2.5" rear drive cage.

About this task

Attention:

- Read “Installation Guidelines” on page 1 and “Safety inspection checklist” on page 2 to ensure that you work safely.
- Power off the server and peripheral devices and disconnect the power cords and all external cables. See “Power off the server” on page 27.
- Prevent exposure to static electricity, which might lead to system halt and loss of data, by keeping static-sensitive components in their static-protective packages until installation, and handling these devices with an electrostatic-discharge wrist strap or other grounding system.
- The rear drive cage is supported on some server models with thermal requirements. See “Thermal rules” on page 17 to ensure that the server is under permitted ambient temperature and the correct heat sink and system fans are used. If needed, replace your heat sink or system fan first.
  - “Processor and heat sink replacement (trained technician only)” on page 236
  - “System fan replacement” on page 329

Procedure

Step 1. Touch the static-protective package that contains the new part to any unpainted surface on the outside of the server. Then, take the new part out of the package and place it on a static-protective surface.

Step 2. (Optional) Install the required rearwall brackets.

Note: For the required rearwall brackets, see "Rearwall bracket replacement" on page 262.

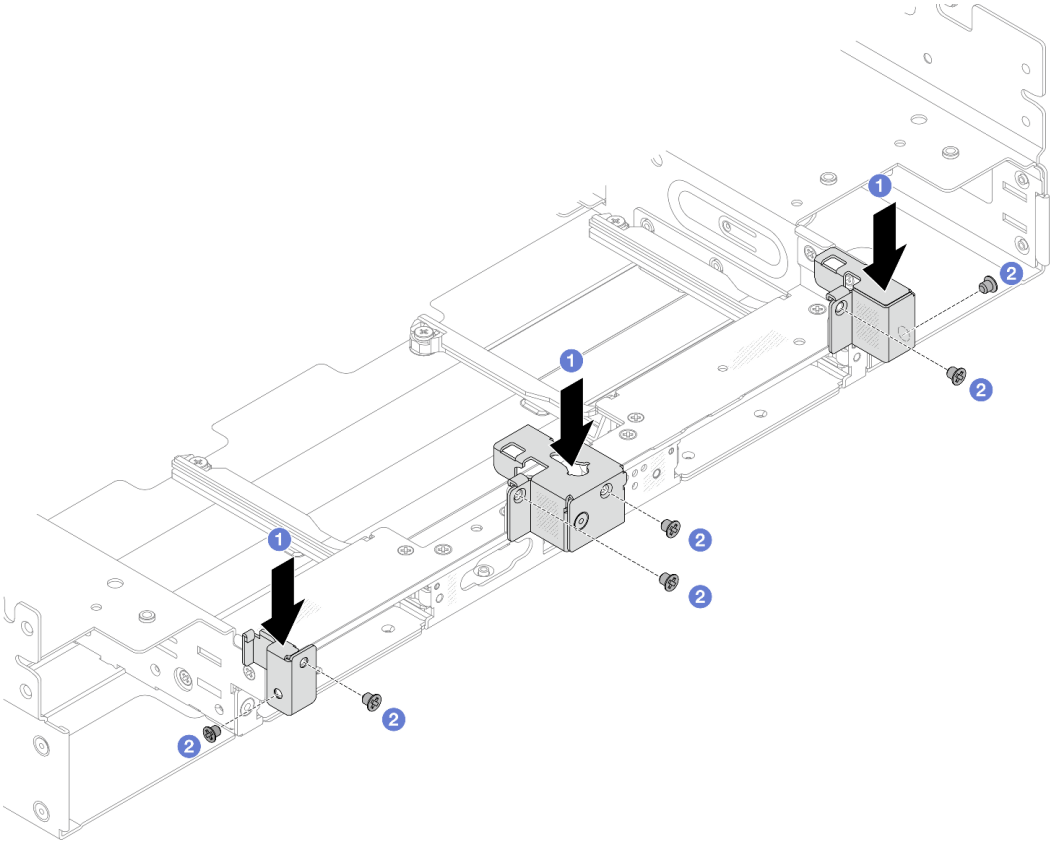

Figure 286. Installing rearwall brackets for the 8 x 2.5" rear drive cage assembly

a. 1 Align the rearwall brackets with the chassis, and insert the brackets into place.

b. 2 Install the screws to secure the rearwall brackets.

Step 3. (Optional) Install the 2FH riser assembly. See Install a rear riser assembly.

Step 4. Lower the backplane into the drive cage so that the pins of the backplane pass through the holes on the drive cage, and press the backplane into position.

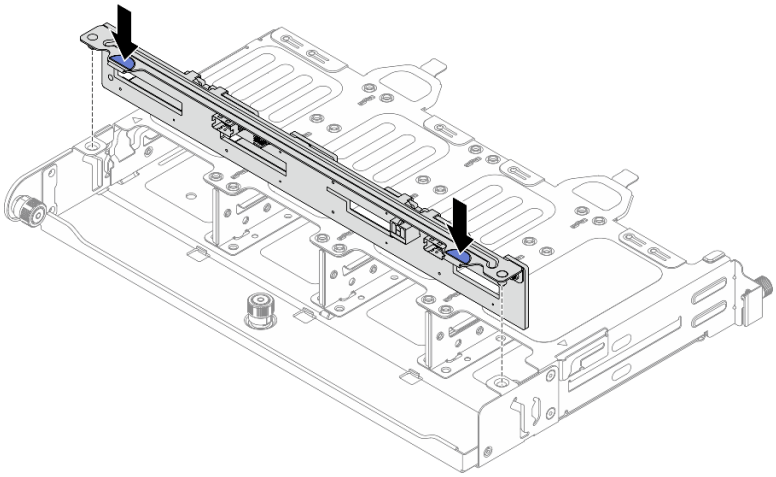

Figure 287. Installing the 8 x 2.5" rear drive backplane

Step 5. Install the rear drive cage.

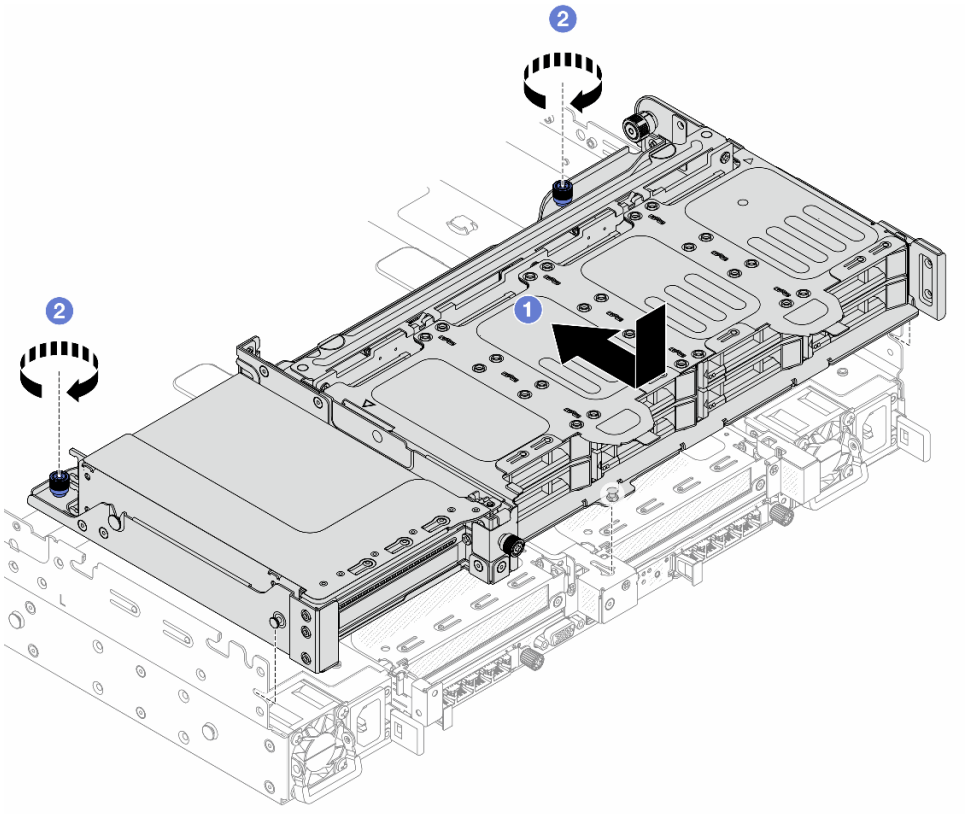

Figure 288. Installing the 8 x 2.5" rear drive cage

a. 1 Lower the drive cage into the chassis, and move the drive cage forward until it clicks into position.

b. 2 Tighten the screws to secure the drive cage.

Step 6. Connect cables to the rear drive backplane. See ***Internal Cable Routing Guide***.

After you finish

1. Reinstall the drives or drive fillers into the rear drive cage. See “Install a 2.5-inch or 3.5-inch hot-swap drive” on page 52.
2. Complete the parts replacement. See “Complete the parts replacement” on page 341.

Demo video

Watch the procedure on YouTube

Remove the 4 x 3.5" rear drive cage

Follow the instructions in this section to remove the 4 x 3.5" rear drive cage.

About this task

Attention:

- Read “Installation Guidelines” on page 1 and “Safety inspection checklist” on page 2 to ensure that you work safely.
- Power off the server and peripheral devices and disconnect the power cords and all external cables. See “Power off the server” on page 27.
- Prevent exposure to static electricity, which might lead to system halt and loss of data, by keeping static-sensitive components in their static-protective packages until installation, and handling these devices with an electrostatic-discharge wrist strap or other grounding system.
- Before you remove or make changes to drives, drive controllers (including controllers that are integrated on the system board assembly), drive backplanes or drive cables, back up all important data that is stored on drives.
- Before you remove any component of a RAID array (drive, RAID card, etc.), back up all RAID configuration information.
- If one or more NVMe solid-state drives are to be removed, it is recommended to disable them beforehand via the operating system.

Procedure

Step 1. Make preparation for the task.

a. If the server is installed in a rack, slide the server out on its rack slide rails to gain access to the top cover, or remove the server from the rack. See “Server replacement” on page 34.

b. Remove the top cover. See “Remove the top cover” on page 335.

c. Disconnect cables from the rear drive backplane.

d. Remove all the installed drives and fillers (if any) from the drive bays. See “Remove a 2.5-inch or 3.5-inch hot-swap drive” on page 50.

Step 2. Remove the rear drive cage.

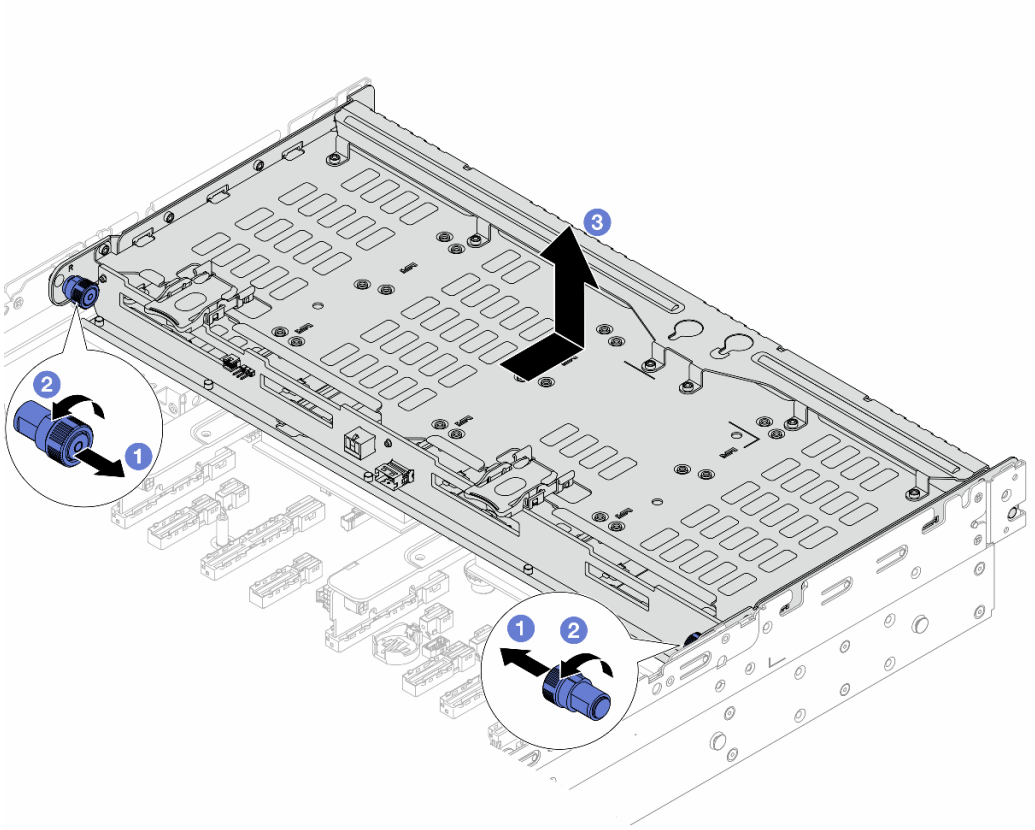

Figure 289. Removing the 4 x 3.5" rear drive cage

a. 1 Pull out the blue plungers.

b. 2 Twist the blue plungers to keep them unlocked.

c. 3 Slide the drive cage towards the rear of the chassis to release it, and then lift the drive cage out of the chassis.

Step 3. Remove the 4 x 3.5" rear drive backplane. See “Remove the rear drive backplane” on page 267.

After you finish

If you are instructed to return the component or optional device, follow all packaging instructions, and use any packaging materials for shipping that are supplied to you.

Demo video

Watch the procedure on YouTube

Install the 4 x 3.5" rear drive cage

Follow the instructions in this section to install the 4 x 3.5" rear drive cage.

About this task

Attention:

- Read “Installation Guidelines” on page 1 and “Safety inspection checklist” on page 2 to ensure that you work safely.

- Power off the server and peripheral devices and disconnect the power cords and all external cables. See “Power off the server” on page 27.
- Prevent exposure to static electricity, which might lead to system halt and loss of data, by keeping static-sensitive components in their static-protective packages until installation, and handling these devices with an electrostatic-discharge wrist strap or other grounding system.
- The rear drive cage is supported on some server models with thermal requirements. See “Thermal rules” on page 17 to ensure that the server is under permitted ambient temperature and the correct heat sink and system fans are used. If needed, replace your heat sink or system fan first.
  - “Processor and heat sink replacement (trained technician only)” on page 236
  - “System fan replacement” on page 329

Procedure

Step 1. Touch the static-protective package that contains the new part to any unpainted surface on the outside of the server. Then, take the new part out of the package and place it on a static-protective surface.

Step 2. (Optional) Install the required rearwall brackets.

Note: For the required rearwall brackets, see “Rearwall bracket replacement” on page 262.

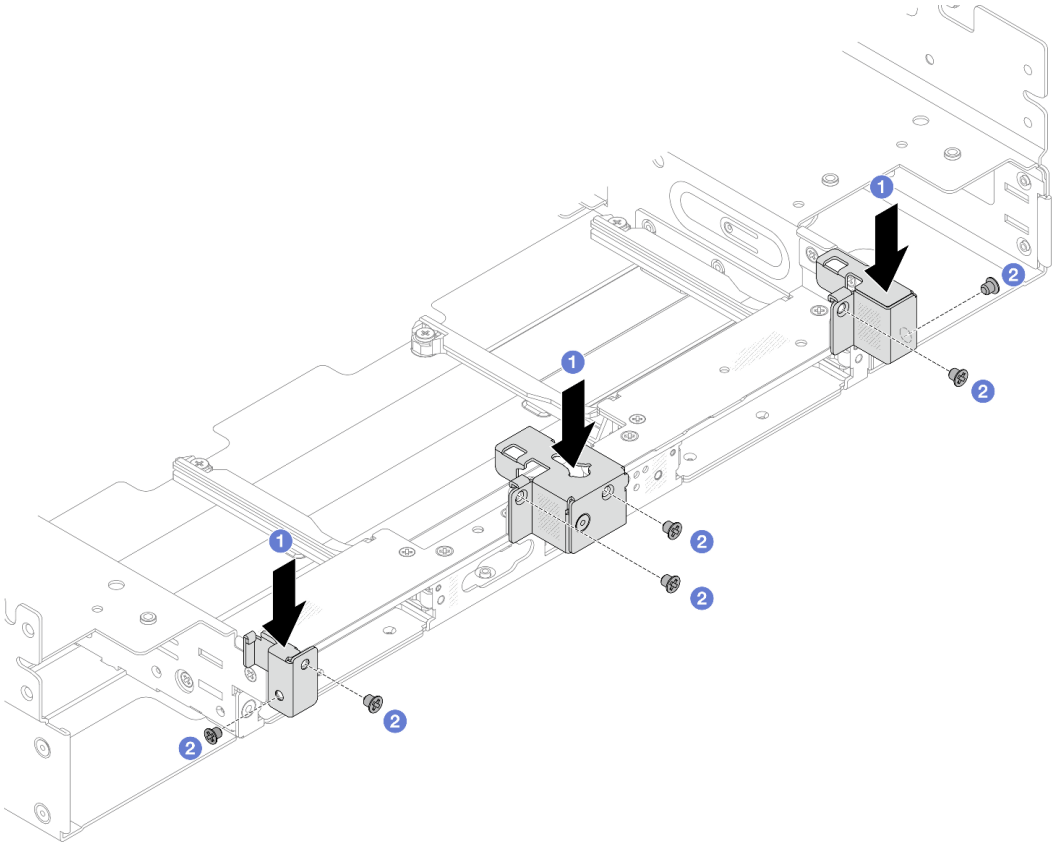

Figure 290. Installing rearwall brackets for the 4 x 3.5" rear drive cage assembly

a. 1 Align the rearwall brackets with the chassis, and insert the brackets into place.

b. 2 Install the screws to secure the rearwall brackets.

Step 3. (Optional) Install two middle brackets.

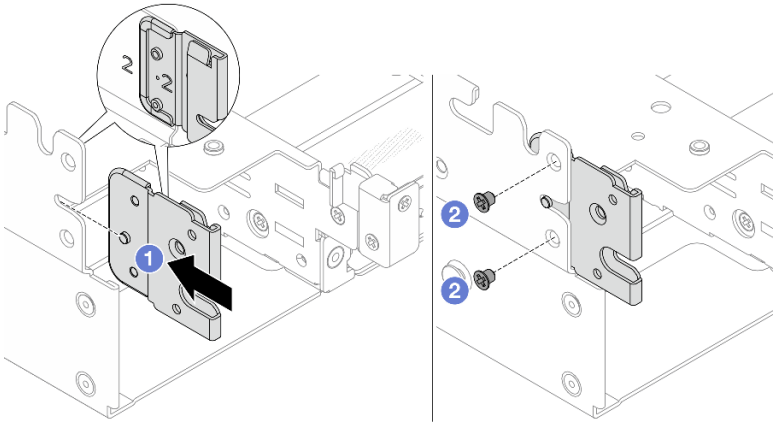

Figure 291. Installing middle brackets

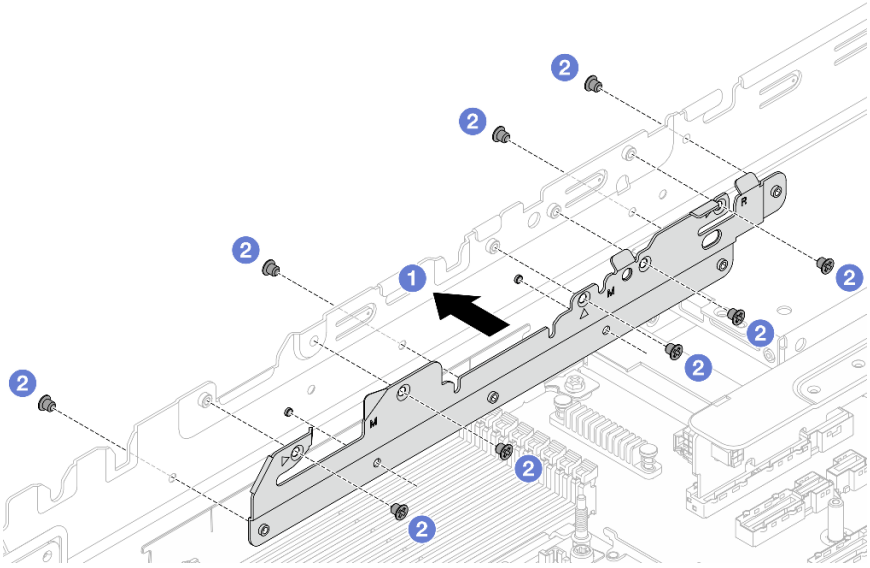

a. 1 Align two holes in the lower part of the middle bracket with the pins on the chassis, and install the middle brackets into the chassis.

b. 2 Install the screws to secure the middle brackets.

Step 4. Install the 4 x 3.5" rear drive backplane. See “Install the rear drive backplane” on page 269.

Step 5. Install the rear drive cage.

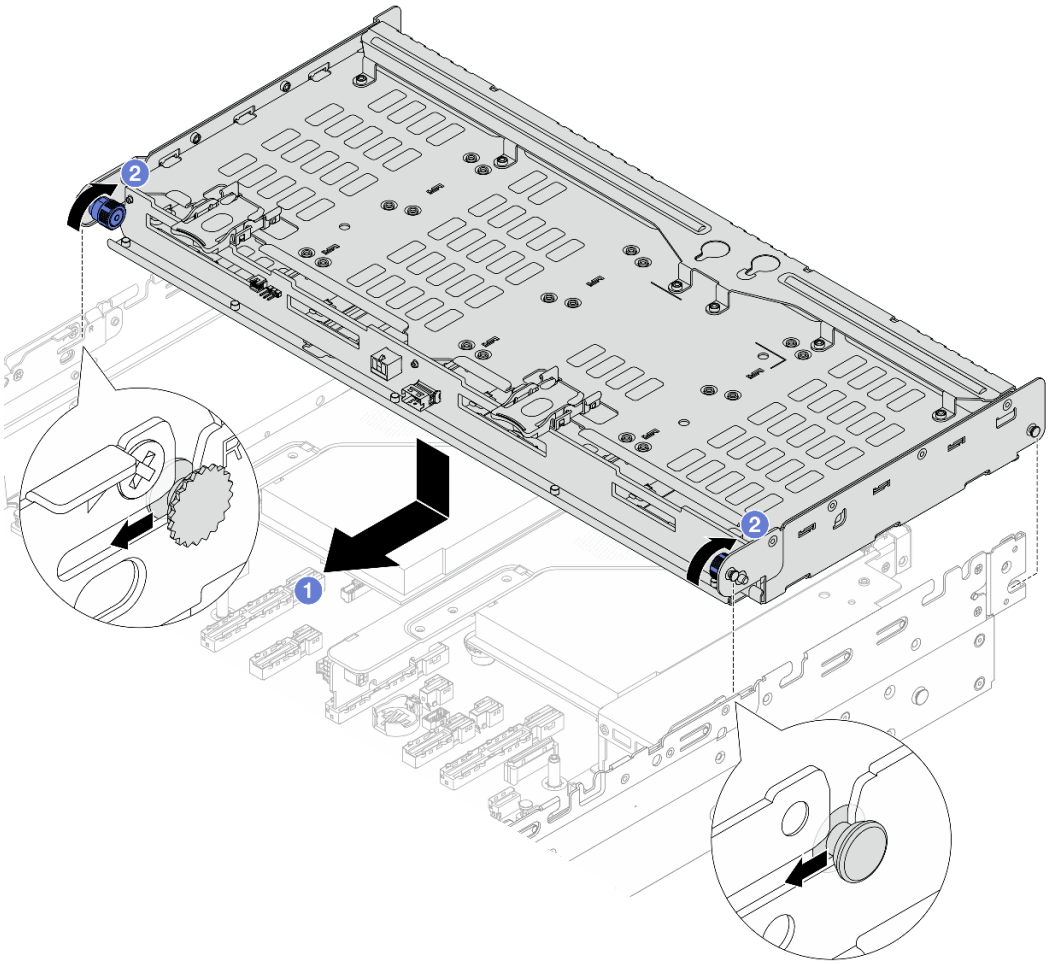

Figure 292. Installing the 4 x 3.5" rear drive cage

a. 1 Align the rear drive cage with the chassis, and lower the drive cage into the chassis. Move the rear drive cage forward until it clicks into position.

b. 2 Twist and release the blue plungers to secure the drive cage in place.

Step 6. Connect cables to the rear drive backplane. See ***Internal Cable Routing Guide***.

Step 7. Install the top cover support bracket.

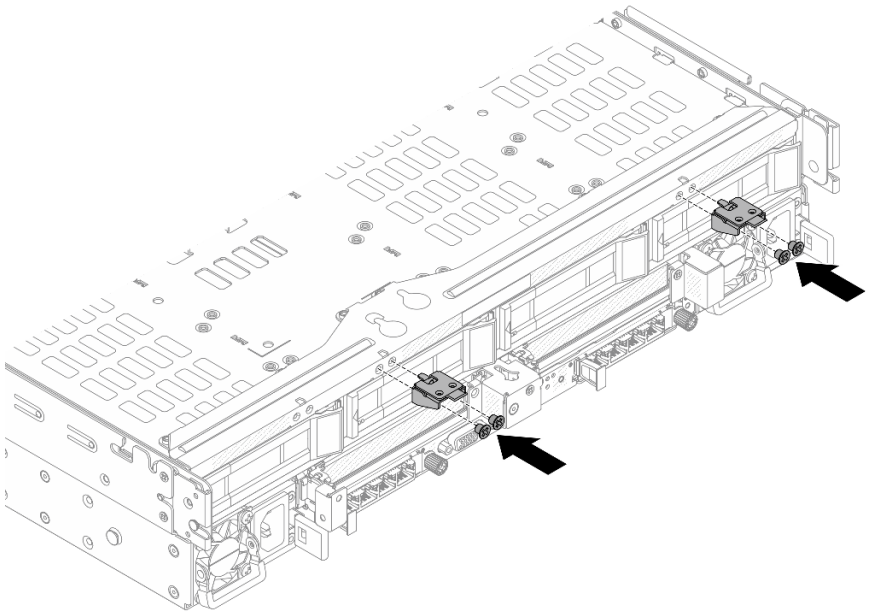

Figure 293. Installing the top cover support bracket

After you finish

1. Reinstall the drives or drive fillers into the rear drive cage. See “Install a 2.5-inch or 3.5-inch hot-swap drive” on page 52.
2. Complete the parts replacement. See “Complete the parts replacement” on page 341.

Demo video

Watch the procedure on YouTube

Rear OCP module replacement

Follow the instructions in this section to remove and install the rear OCP module.

- “Remove the rear OCP module” on page 286
- “Install the rear OCP module” on page 287

Remove the rear OCP module

Follow the instructions in this section to remove the rear OCP module.

Attention:

- Read “Installation Guidelines” on page 1 and “Safety inspection checklist” on page 2 to ensure that you work safely.
- Power off the server and peripheral devices and disconnect the power cords and all external cables. See “Power off the server” on page 27.
- Prevent exposure to static electricity, which might lead to system halt and loss of data, by keeping static-sensitive components in their static-protective packages until installation, and handling these devices with an electrostatic-discharge wrist strap or other grounding system.

Procedure

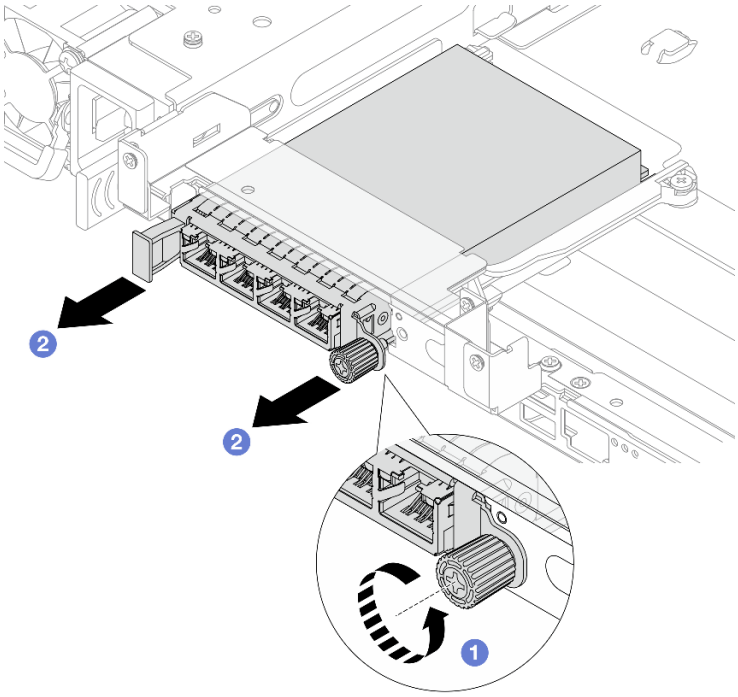

Figure 294. Removing the rear OCP module

Step 1. 1 Loosen the thumbscrew that secures the OCP module. Use a screwdriver if needed.

Step 2. 2 Pull out the OCP module.

After you finish

1. Install a new rear OCP module or an OCP module filler. See "Install the rear OCP module" on page 287.
2. If you are instructed to return the component or optional device, follow all packaging instructions, and use any packaging materials for shipping that are supplied to you.

Demo video

Watch the procedure on YouTube

Install the rear OCP module

Follow the instructions in this section to install the rear OCP module.

About this task

Attention:

- Read "Installation Guidelines" on page 1 and "Safety inspection checklist" on page 2 to ensure that you work safely.
- Power off the server and peripheral devices and disconnect the power cords and all external cables. See "Power off the server" on page 27.
- Prevent exposure to static electricity, which might lead to system halt and loss of data, by keeping static-sensitive components in their static-protective packages until installation, and handling these devices with an electrostatic-discharge wrist strap or other grounding system.

Procedure

Step 1. Touch the static-protective package that contains the new part to any unpainted surface on the outside of the server. Then, take the new part out of the package and place it on a static-protective surface.

Step 2. Remove the OCP module filler if there is.

Step 3. Install the OCP module.

Note: Ensure that the OCP module is fully seated and the thumbscrew is securely tightened. Otherwise, the OCP module will not get full connection and may not function.

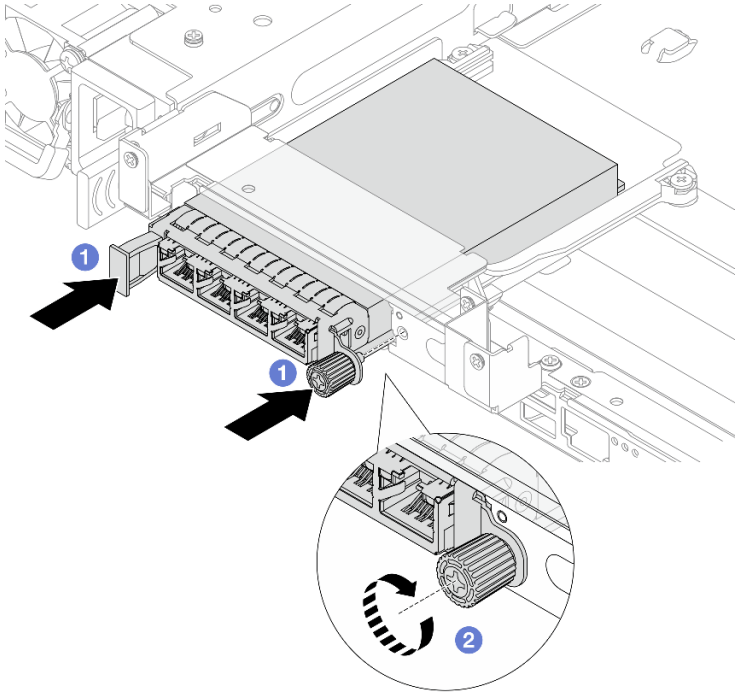

Figure 295. Installing the rear OCP module

a. 1 Push the OCP module into the slot until it is fully seated.

b. 2 Tighten the thumbscrew to secure the OCP module. Use a screwdriver if needed.

Note: The OCP module provides two or four extra Ethernet connectors for network connections.

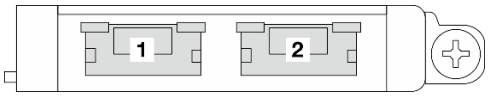

Figure 296. OCP module (two connectors)

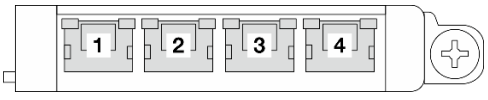

Figure 297. OCP module (four connectors)

By default, any Ethernet connector on the OCP module can also function as a management connector using the shared management capacity.

After you finish

Complete the parts replacement. See “Complete the parts replacement” on page 341.

Note: When ThinkSystem OCP 4 to 1 Management Port Consolidation Adapter is installed, multiple servers can be chained through the adapter. See “Multi-server configurations” on page 23 for more information.

Demo video

Watch the procedure on YouTube

Rear riser assembly and PCIe adapter replacement

Follow the instructions in this section to remove and install a rear riser assembly and PCIe adapter. The PCIe adapter can be an Ethernet card, a host bus adapter, a RAID adapter, an add-in PCIe SSD adapter, or any other supported PCIe adapters. PCIe adapters vary by type, but the installation and removal procedures are the same.

- “Remove a rear riser assembly” on page 291
- “Remove a rear PCIe adapter and riser card” on page 294
- “Install a rear PCIe adapter and riser card” on page 298
- “Install a rear riser assembly” on page 302

Riser cages vary by server rear configurations.

Notes:
- For replacement of the 3FH riser cage for Neptune Core Module, see “Lenovo Processor Neptune Core Module replacement (trained technicians only)” on page 130 or Lenovo Compute Complex Neptune Core Module replacement (trained technicians only).
- For replacement of graphics processing units (GPUs), see “GPU replacement” on page 90.
- For replacement of the 1FH and 3FH M.2 riser cages, see “M.2 drive cage and drive backplanes replacement” on page 153.
- For configurations with 8 x 2.5-inch rear drive cage, a flat screwdriver or a coin is needed to release the latch of an external small form-factor pluggable (SFP) cable connected to a PCIe adapter at slot 1 or 5.

Table 18. Supported rear riser cages

Server configuration	Riser cage 1	Riser cage 2	Riser cage 3	Riser cage 4
Configuration with 10 PCIe slots	• 2LP riser cage 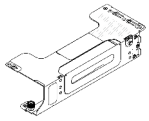	• 3FH riser cage 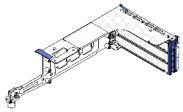 • 3FH M.2 riser cage 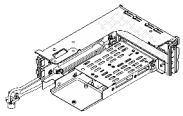	• 3FH riser cage 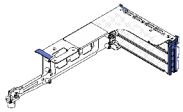 • 3FH M.2 riser cage 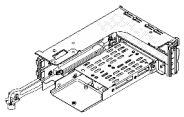 • 3FH riser cage for Neptune Core Module 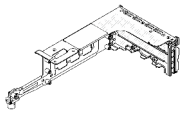	• 2LP riser cage 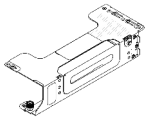
Configuration with a 4 x 2.5-inch rear drive cage	• 2LP riser cage 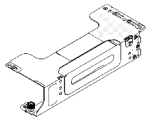	• 3FH riser cage 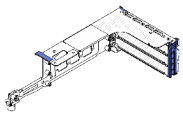 • 3FH M.2 riser cage 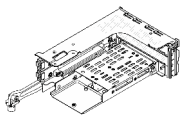	• 1FH riser cage 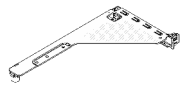 • 1FH M.2 riser cage 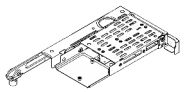	N/A

Table 18. Supported rear riser cages (continued)

Server configuration	Riser cage 1	Riser cage 2	Riser cage 3	Riser cage 4
Configuration with an 8 x 2.5-inch rear drive cage	• 2FH riser cage 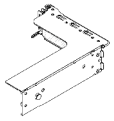	• 1FH riser cage 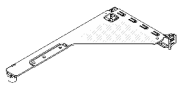 • 1FH M.2 riser cage 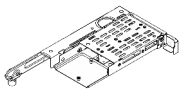	• 1FH riser cage 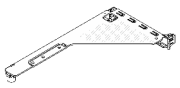 • 1FH M.2 riser cage 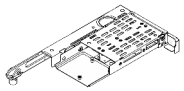	N/A
Configuration with a 4 x 3.5-inch rear drive cage	N/A	• 1FH riser cage 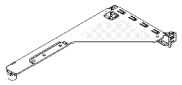 • 1FH M.2 riser cage 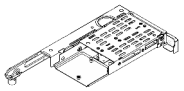	• 1FH riser cage 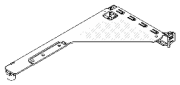 • 1FH M.2 riser cage 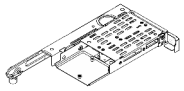	N/A

Remove a rear riser assembly

Follow the instructions in this section to remove a rear riser assembly.

About this task

S011



CAUTION:
Sharp edges, corners, or joints nearby.

The server supports different types of riser cages (see “Rear riser assembly and PCIe adapter replacement” on page 289).

Attention:

- Read “Installation Guidelines” on page 1 and “Safety inspection checklist” on page 2 to ensure that you work safely.
- Power off the server and peripheral devices and disconnect the power cords and all external cables. See “Power off the server” on page 27.

- Prevent exposure to static electricity, which might lead to system halt and loss of data, by keeping static-sensitive components in their static-protective packages until installation, and handling these devices with an electrostatic-discharge wrist strap or other grounding system.
- Before you remove any component of a RAID array (drive, RAID card, etc.), back up all RAID configuration information.

Procedure

Step 1. Make preparation for the task.

a. If the server is installed in a rack, slide the server out on its rack slide rails to gain access to the top cover, or remove the server from the rack. See "Server replacement" on page 34.

b. Remove the top cover. See "Remove the top cover" on page 335.

c. Remove the system fan cage if needed. See "Remove the system fan cage" on page 333.

d. Remove the air baffle if needed. See "Remove the air baffle" on page 54.

e. Disconnect riser card cables and PCIe adapter cables from the system board assembly.

Attention: To avoid damaging the system board assembly, make sure to follow the instructions in ***Internal Cable Routing Guide*** when disconnecting cables from the system board assembly.

Step 2. Remove the riser assembly.

Note: The following illustrations show the 3FH riser assembly and 2FH riser assembly as examples. The replacement procedure for other types of riser assembly is the same.

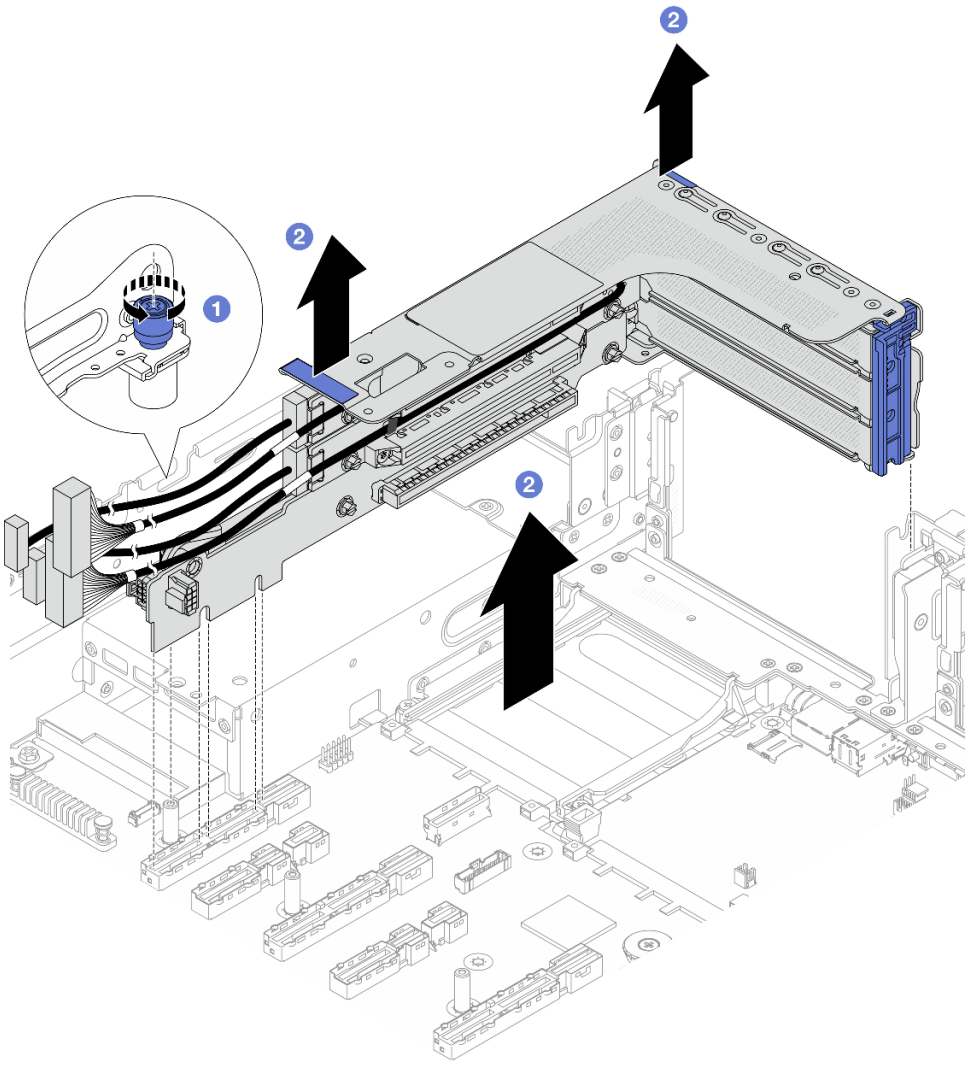

Figure 298. Removing the 3FH riser assembly

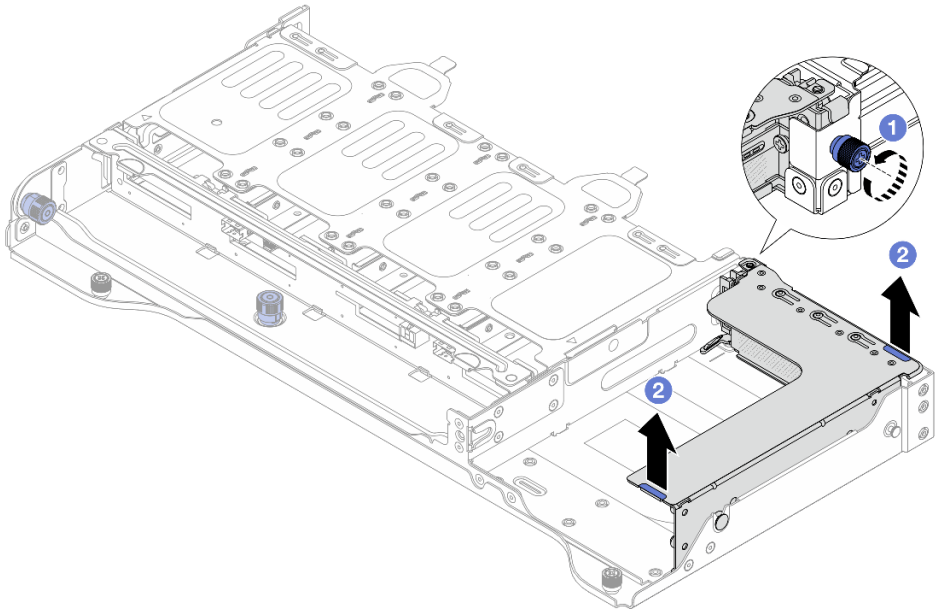

Figure 299. Removing the 2FH riser assembly

a. 1 Loosen the screw that secures the riser assembly.

b. 2 Grasp the riser assembly by its edges and carefully lift it out of the chassis.

After you finish

1. Remove the PCIe adapter from the riser assembly. See “Remove a rear PCIe adapter and riser card” on page 294.
2. If you are instructed to return the component or optional device, follow all packaging instructions, and use any packaging materials for shipping that are supplied to you.

Demo video

Watch the procedure on YouTube

Remove a rear PCIe adapter and riser card

Follow the instructions in this section to remove a rear PCIe adapter and riser card.

About this task

S011



CAUTION:
Sharp edges, corners, or joints nearby.

Attention:

- Read “Installation Guidelines” on page 1 and “Safety inspection checklist” on page 2 to ensure that you work safely.
- Power off the server and peripheral devices and disconnect the power cords and all external cables. See “Power off the server” on page 27.
- Prevent exposure to static electricity, which might lead to system halt and loss of data, by keeping static-sensitive components in their static-protective packages until installation, and handling these devices with an electrostatic-discharge wrist strap or other grounding system.
- Before you remove or make changes to drives, drive controllers (including controllers that are integrated on the system board assembly), drive backplanes or drive cables, back up all important data that is stored on drives.
- Before you remove any component of a RAID array (drive, RAID card, etc.), back up all RAID configuration information.

Procedure

Step 1. Make preparation for the task.

a. If the server is installed in a rack, slide the server out on its rack slide rails to gain access to the top cover, or remove the server from the rack. See “Server replacement” on page 34.

b. Remove the top cover. See “Remove the top cover” on page 335.

c. Remove the air baffle if needed. See “Remove the air baffle” on page 54.

d. Remove the riser assembly. See “Remove a rear riser assembly” on page 291.

Step 2. Remove a PCIe adapter.

Note: For x16 LP PCIe adapters that are mounted on the 3FH/2FH riser cage and weight from 250 g to 330 g, remove the screw that secures the adapter first.

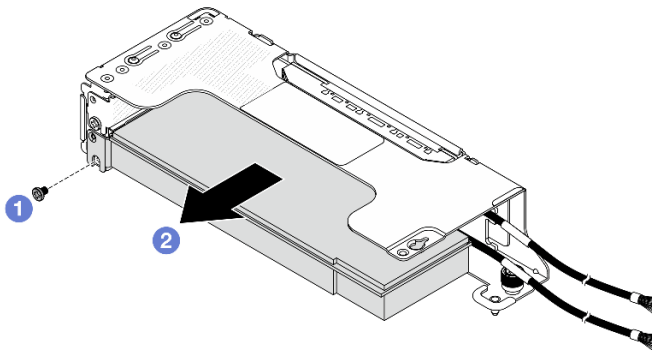

Figure 300. Removing a PCIe adapter from the 2LP riser cage

a. 1 Remove the screw that secures the PCIe adapter.

b. 2 Grasp the PCIe adapter by its edges and carefully pull it out of the PCIe slot.

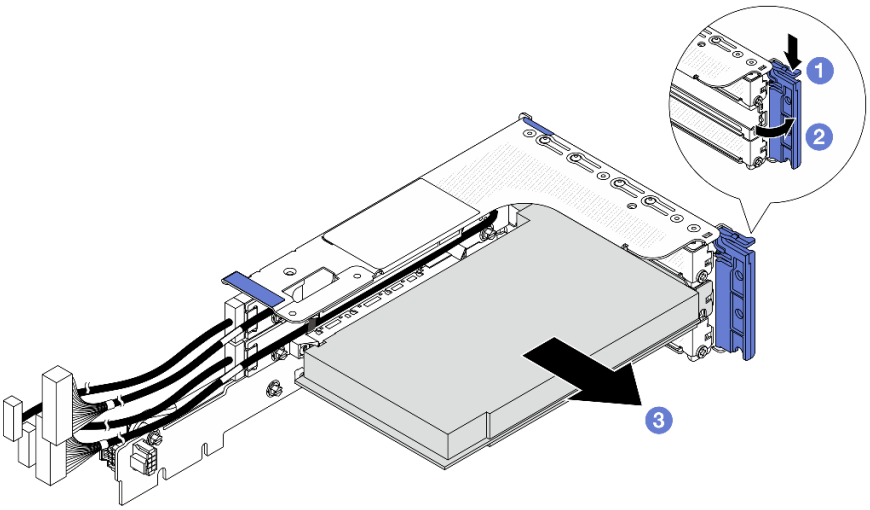

Figure 301. Removing a PCIe adapter from the 3FH riser cage

a. 1 Press the retainer clip downward.

b. 2 Rotate the PCIe adapter retention latch to the open position.

c. 3 Grasp the PCIe adapter by its edges and carefully pull it out of the PCIe slot.

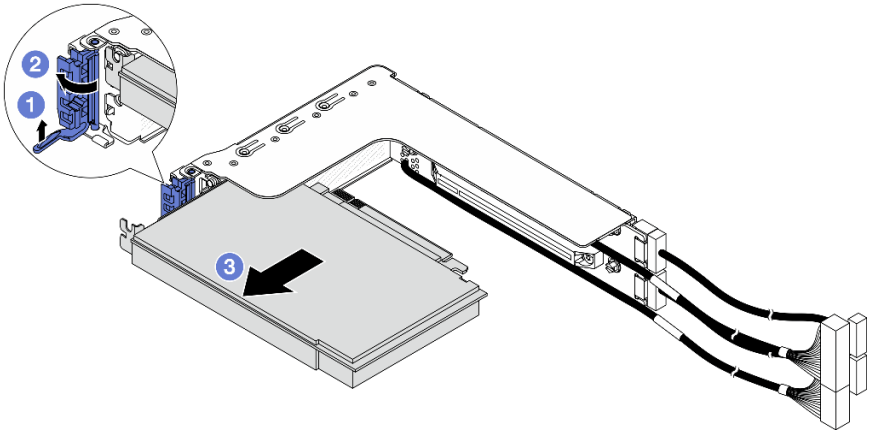

Figure 302. Removing a PCIe adapter from the 2FH riser cage

a. 1 Lift the retainer clip as shown.

b. 2 Rotate the PCIe adapter retention latch to the open position.

c. 3 Grasp the PCIe adapter by its edges and carefully pull it out of the PCIe slot.

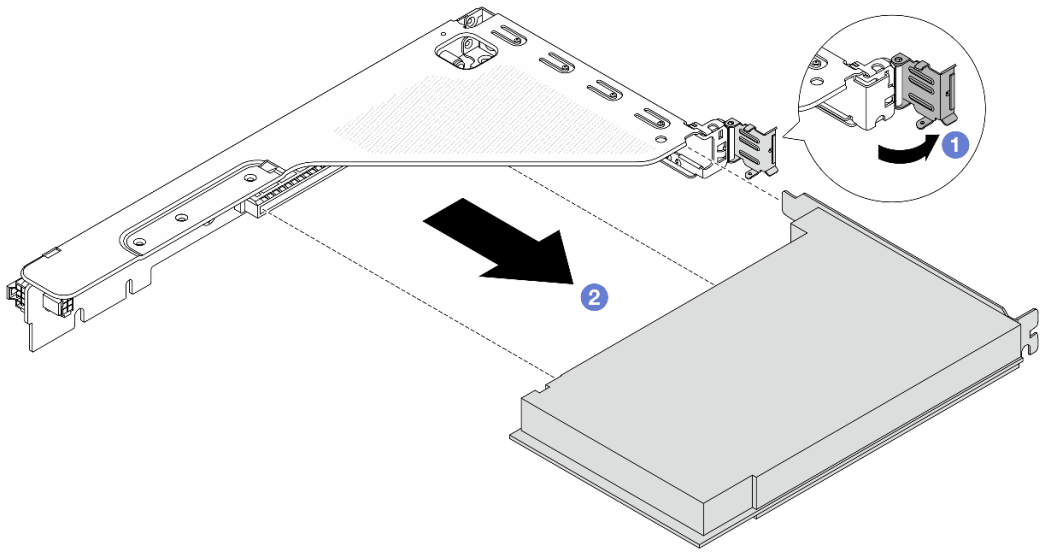

Figure 303. Removing a PCIe adapter from the 1FH riser cage

a. 1 Rotate the PCIe adapter retention latch to the open position.

b. 2 Grasp the PCIe adapter by its edges and carefully pull it out of the PCIe slot.

Step 3. (Optional) If you are replacing the riser card, remove the riser card from the riser cage.

Note: The following illustration shows riser cards on the 3FH riser cage as examples. The replacement procedure for other types of riser cards is the same.

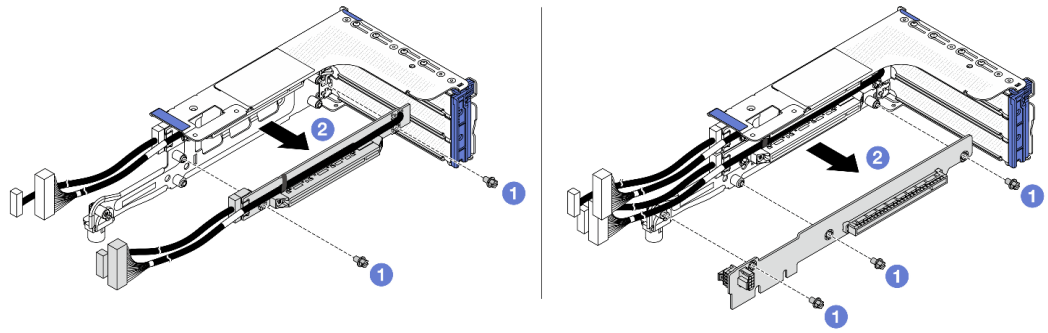

Figure 304. Removing riser cards from the riser cage

a. 1 Remove the screws that secure the riser card.

b. 2 Grasp the riser card by its edges and carefully take it out of the riser cage.

Step 4. (Optional) If no replacement adapter is to be installed in the slot, insert the slot filler into the slot, and then secure the filler with one screw.

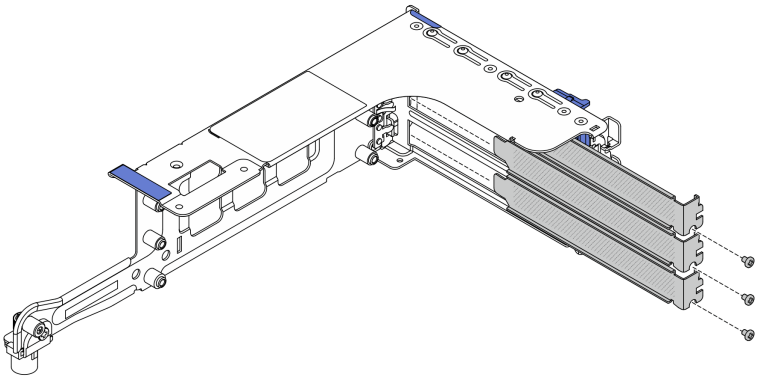

Figure 305. PCIe slot filler

After you finish

1. Install a replacement unit. See “Install a rear PCIe adapter and riser card” on page 298.
2. If you are instructed to return the component or optional device, follow all packaging instructions, and use any packaging materials for shipping that are supplied to you.

Demo video

Watch the procedure on YouTube

Install a rear PCIe adapter and riser card

Follow the instructions in this section to install a rear PCIe adapter and a riser card.

About this task

S011



CAUTION:
Sharp edges, corners, or joints nearby.

Attention:

- Read “Installation Guidelines” on page 1 and “Safety inspection checklist” on page 2 to ensure that you work safely.
- Power off the server and peripheral devices and disconnect the power cords and all external cables. See “Power off the server” on page 27.
- Prevent exposure to static electricity, which might lead to system halt and loss of data, by keeping static-sensitive components in their static-protective packages until installation, and handling these devices with an electrostatic-discharge wrist strap or other grounding system.
- For PCIe adapter installation rules, see “PCIe slots and PCIe adapters” on page 12.

Firmware and driver download: You might need to update the firmware or driver after replacing a component.

- Go to https://datacentersupport.lenovo.com/products/servers/thinksystem/sr650v4/downloads/driver-list/ to see the latest firmware and driver updates for your server.
- Go to “Update the firmware” in *User Guide* or *System Configuration Guide* for more information on firmware updating tools.

Procedure

Step 1. Touch the static-protective package that contains the new part to any unpainted surface on the outside of the server. Then, take the new part out of the package and place it on a static-protective surface.

Step 2. (Optional) If a slot filler is installed, loosen the screw that secures the filler, and then remove the filler.

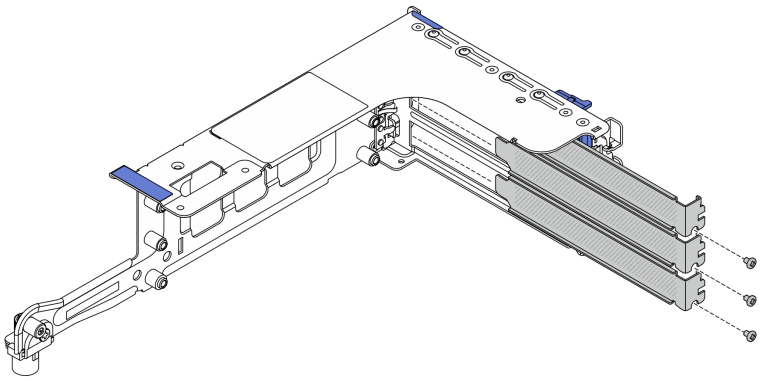

Figure 306. PCIe slot filler

Step 3. (Optional) If you have removed the riser card, install the riser card first.

Note: The following illustration shows riser cards on the 3FH riser cage as examples. The replacement procedure for other types of riser cards is the same.

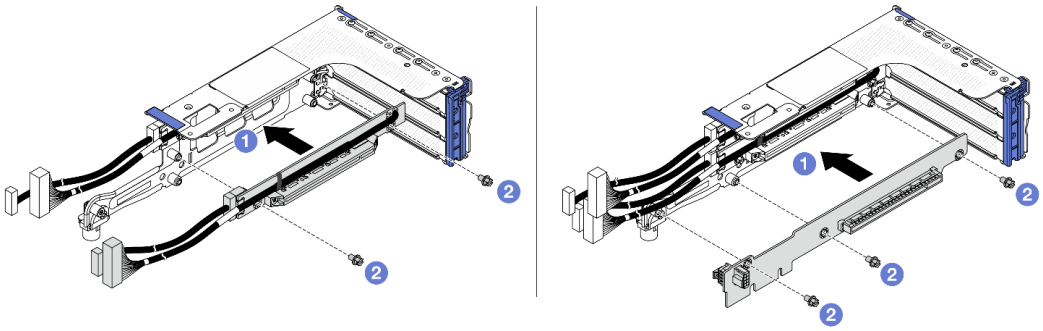

Figure 307. Installing riser cards on the 3FH riser cage

a. 1 Align the riser card with the riser cage and put it into the riser cage.

b. 2 Install the screws to secure riser card into place.

Step 4. Install a PCIe adapter.

Note: For x16 LP PCIe adapters that are mounted on the 3FH/2FH riser cage and weight from 250 g to 330 g, install the screw to secure the adapter before closing the retention latch if the server needs to be shipped.

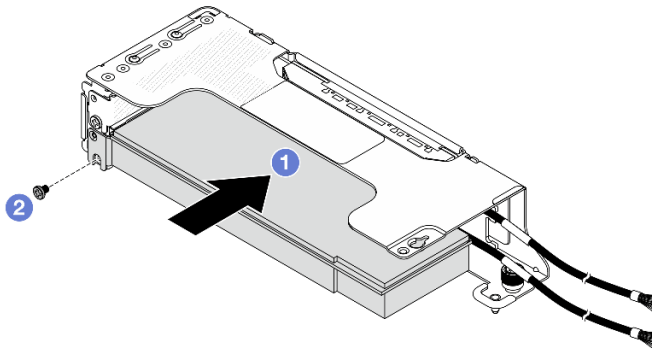

Figure 308. Installing a PCIe adapter on the 2LP riser cage

a. 1 Align the PCIe adapter with the PCIe slot on the riser card. Carefully press the PCIe adapter straight into the slot until it is securely seated.

b. 2 Install the screw to secure the PCIe adapter.

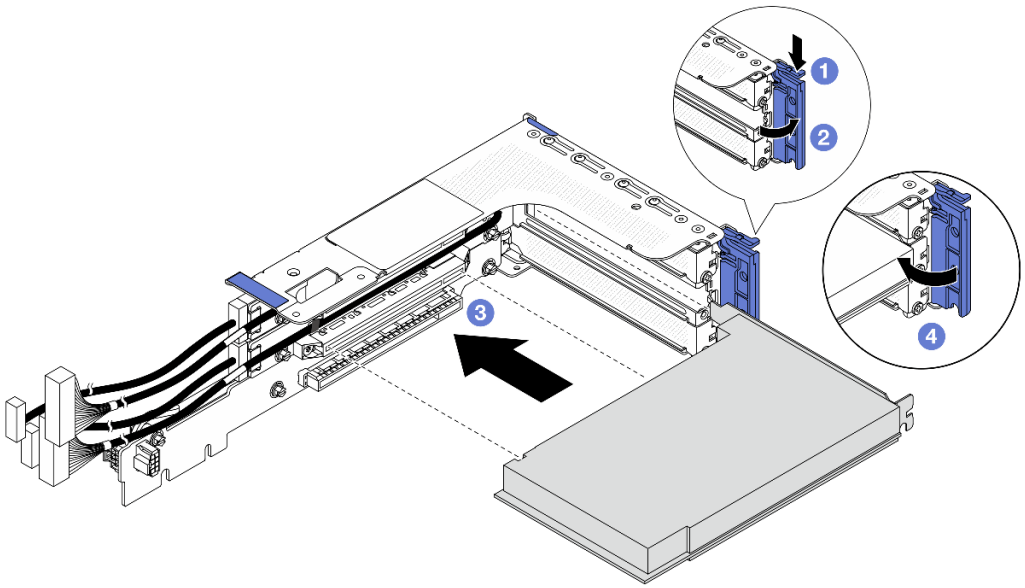

Figure 309. Installing a PCIe adapter on the 3FH riser cage

a. 1 Press the retainer clip downward.

b. 2 Rotate the PCIe adapter retention latch to the open position.

c. 3 Align the PCIe adapter with the PCIe slot on the riser card. Carefully press the PCIe adapter straight into the slot until it is securely seated.

d. 4 Close the retention latch.

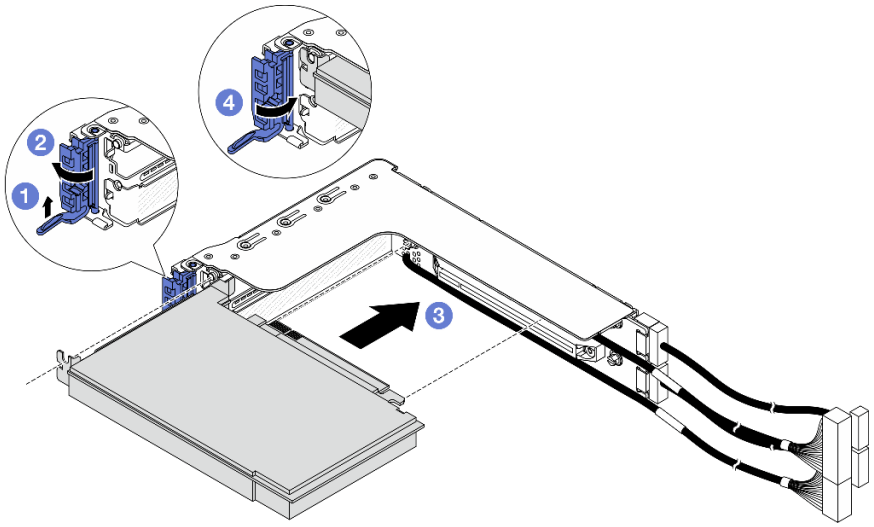

Figure 310. Installing a PCIe adapter on the 2FH riser cage

a. 1 Lift the retainer clip as shown.

b. 2 Rotate the PCIe adapter retention latch to the open position.

c. 3 Align the PCIe adapter with the PCIe slot on the riser card. Carefully press the PCIe adapter straight into the slot until it is securely seated.

d. 4 Close the retention latch.

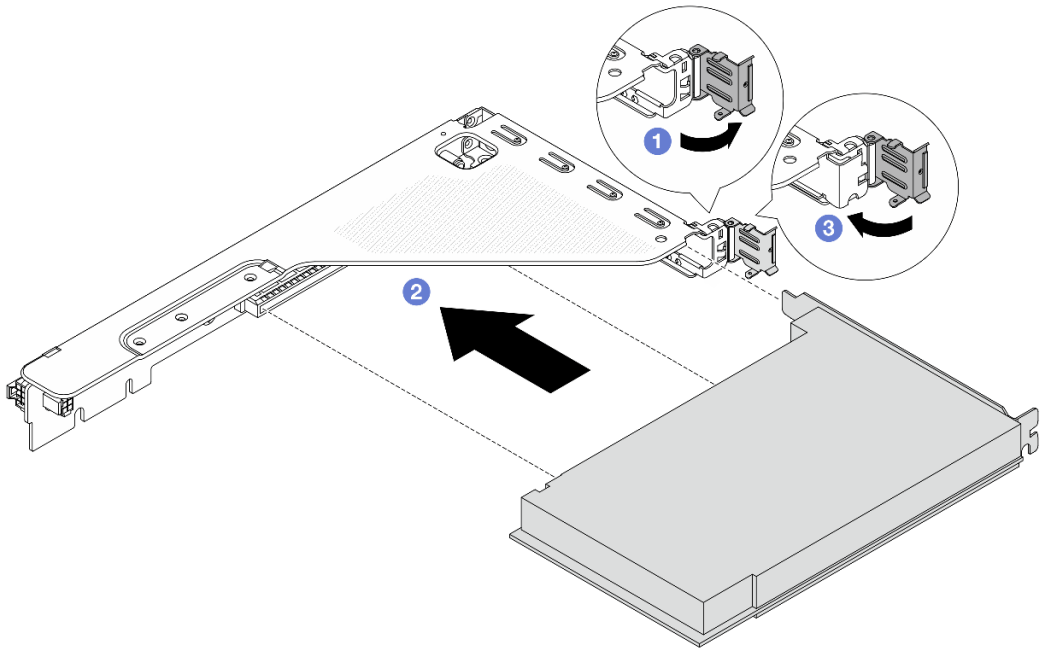

Figure 311. Installing a PCIe adapter on the 1FH riser cage

a. 1 Rotate the PCIe adapter retention latch to the open position.

b. (2) Align the PCIe adapter with the PCIe slot on the riser card. Carefully press the PCIe adapter straight into the slot until it is securely seated.

c. (3) Close the PCIe adapter retention latch.

After you finish

1. Install the riser assembly into the chassis. See “Install a rear riser assembly” on page 302.
2. If you have installed a RAID 930 or 940 adapter, install a RAID flash power module. See “RAID flash power module replacement” on page 254.

Demo video

Watch the procedure on YouTube

Install a rear riser assembly

Follow the instructions in this section to install a rear riser assembly.

About this task

S011



CAUTION:
Sharp edges, corners, or joints nearby.

The server supports different types of riser cages (see “Rear riser assembly and PCIe adapter replacement” on page 289).

Attention:

- Read “Installation Guidelines” on page 1 and “Safety inspection checklist” on page 2 to ensure that you work safely.
- Power off the server and peripheral devices and disconnect the power cords and all external cables. See “Power off the server” on page 27.
- Prevent exposure to static electricity, which might lead to system halt and loss of data, by keeping static-sensitive components in their static-protective packages until installation, and handling these devices with an electrostatic-discharge wrist strap or other grounding system.

Procedure

Step 1. Install the riser assembly into the chassis.

Note: The following illustrations show the 3FH riser assembly and 2FH riser assembly as examples. The replacement procedure for other types of riser assembly is the same.

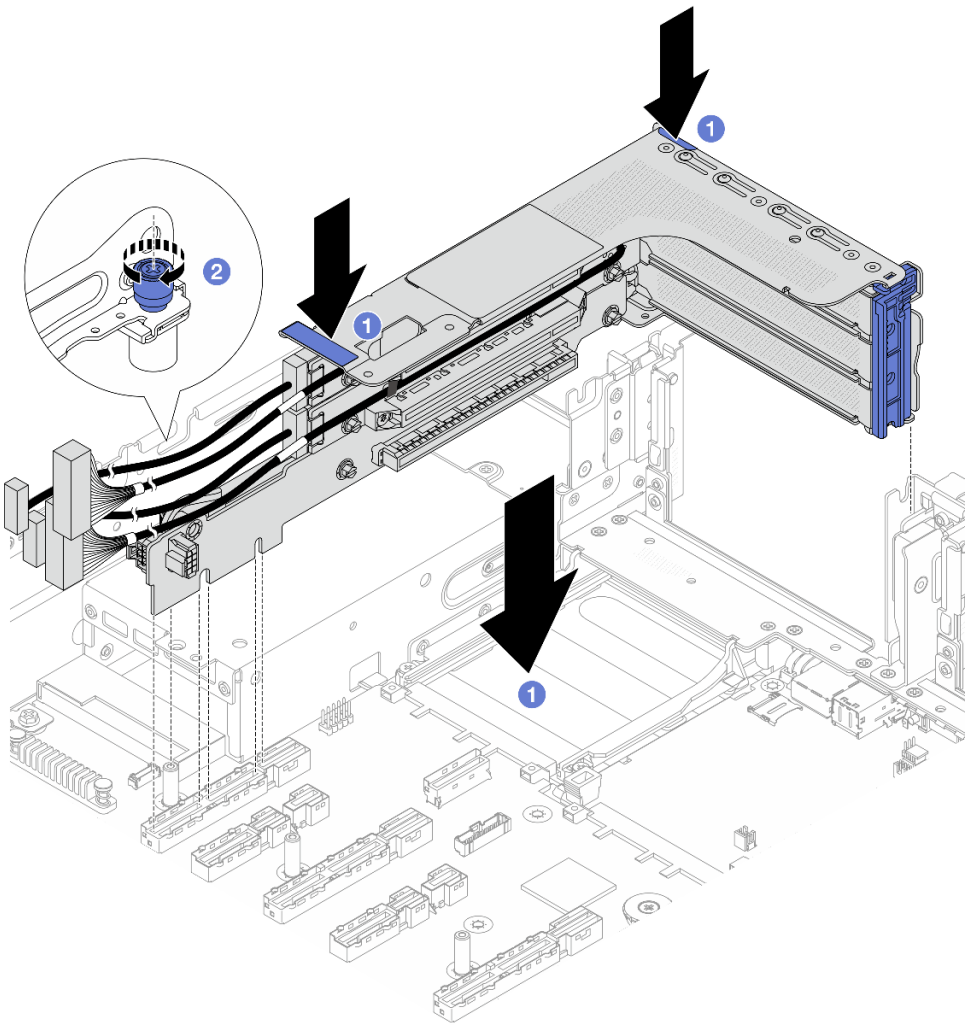

Figure 312. Installing the 3FH riser assembly

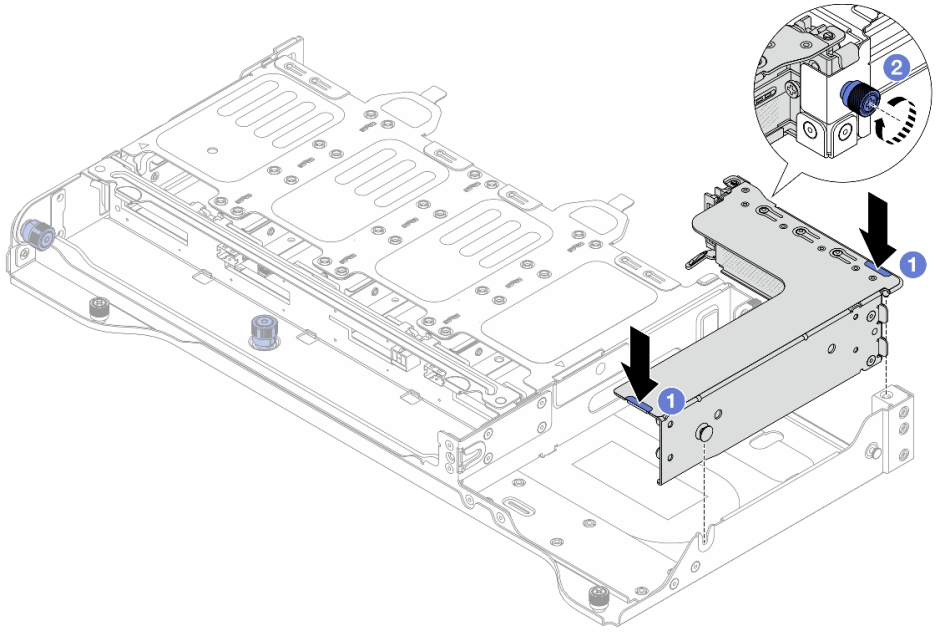

Figure 313. Installing the 2FH riser assembly

a. 1 Lower the riser assembly into the chassis.

b. 2 Tighten the screw to secure the riser assembly.

Step 2. Connect riser card cables and PCIe adapter cables. See ***Internal Cable Routing Guide***.

After you finish

Complete the parts replacement. See “Complete the parts replacement” on page 341.

Demo video

Watch the procedure on YouTube

Security bezel replacement

Follow the instructions in this section to remove and install the security bezel.

- “Remove the security bezel” on page 304
- “Install the security bezel” on page 306

Remove the security bezel

Follow the instructions in this section to remove the security bezel.

About this task

Attention: Read “Installation Guidelines” on page 1 and “Safety inspection checklist” on page 2 to ensure that you work safely.

Procedure

Step 1. Use the key to unlock the security bezel.

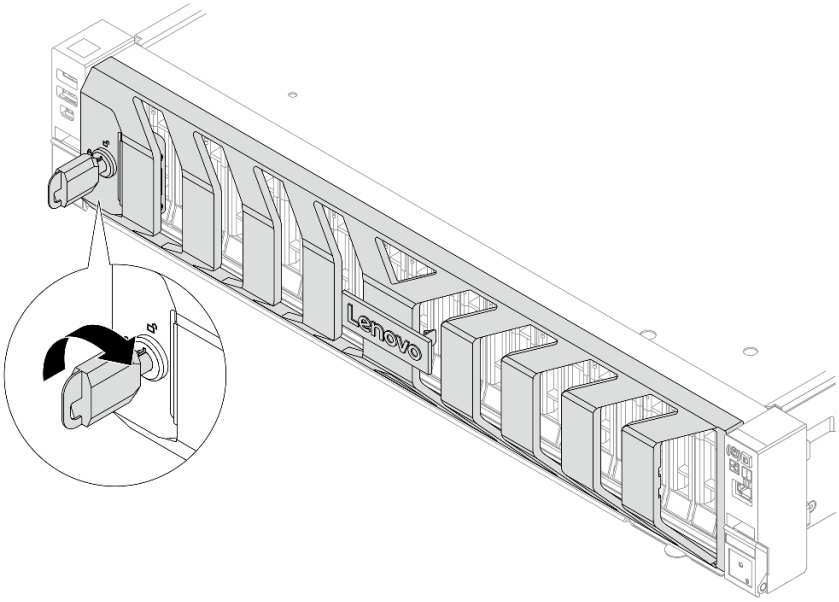

Figure 314. Unlocking the security bezel

Step 2. Remove the security bezel.

Attention: Before you ship the rack with the server installed, reinstall and lock the security bezel into place.

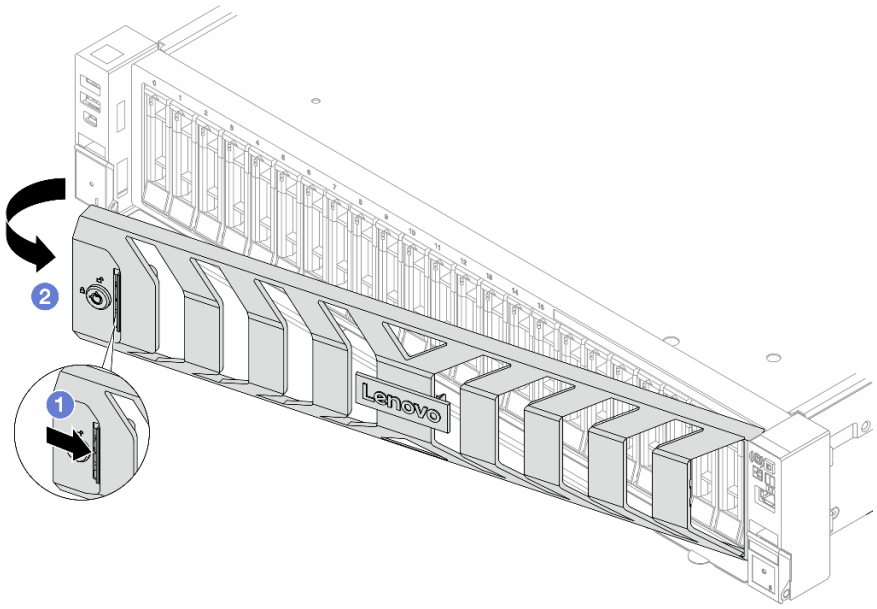

Figure 315. Removing the security bezel

a. 1 Press the release latch.
b. 2 Rotate the security bezel outward to remove it from the chassis.

After you finish

If you are instructed to return the component or optional device, follow all packaging instructions, and use any packaging materials for shipping that are supplied to you.

Demo video

Watch the procedure on YouTube

Install the security bezel

Follow the instructions in this section to install the security bezel.

About this task

Attention: Read “Installation Guidelines” on page 1 and “Safety inspection checklist” on page 2 to ensure that you work safely.

Procedure

Step 1. If the key is held inside the security bezel, remove it out of the security bezel.

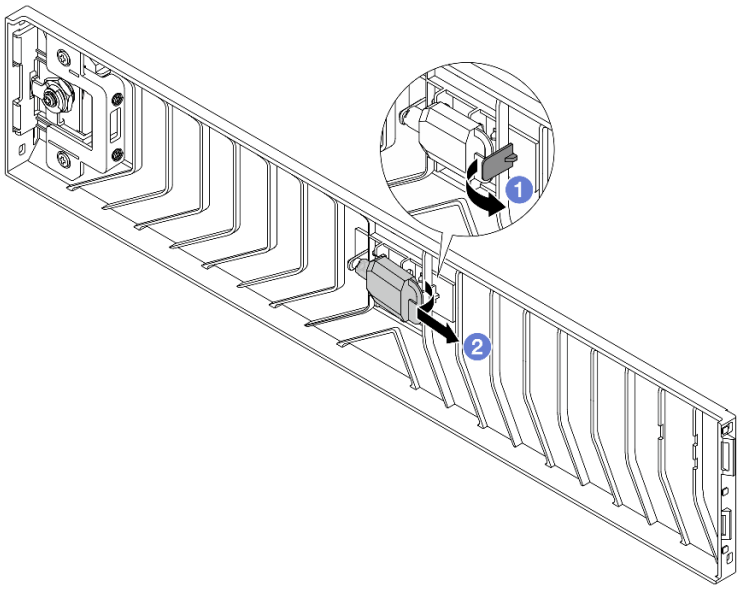

Figure 316. Removing the key

a. 1 Press the latch to release the key.

b. 2 Remove the key from the retaining clip in the shown direction.

Step 2. Install the security bezel to the chassis.

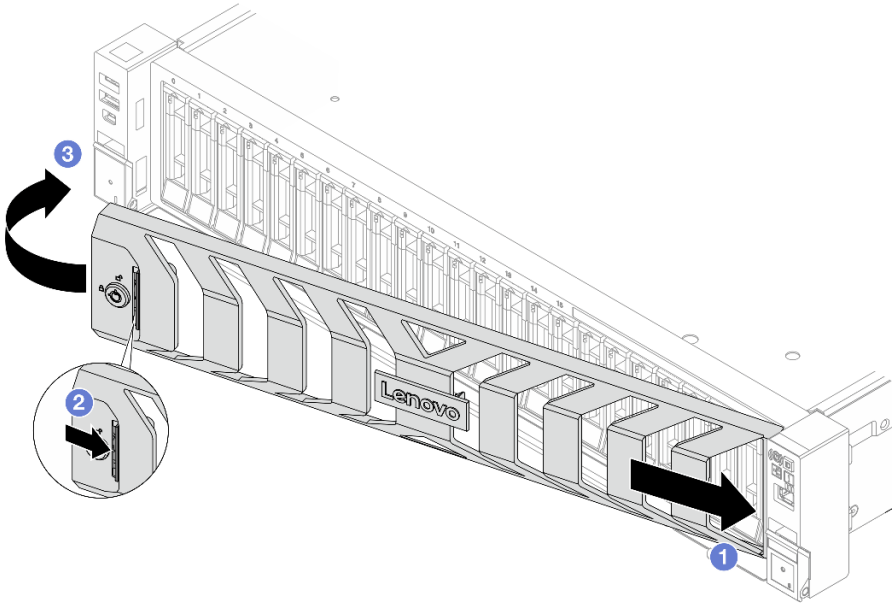

Figure 317. Installing the security bezel

a. 1 Insert the tab on the security bezel into the slot on the right rack latch.

b. 2 Press and hold the blue release latch.

c. 3 Rotate the security bezel inward until the left side clicks into place.

Step 3. Use the key to lock the security bezel to the closed position.

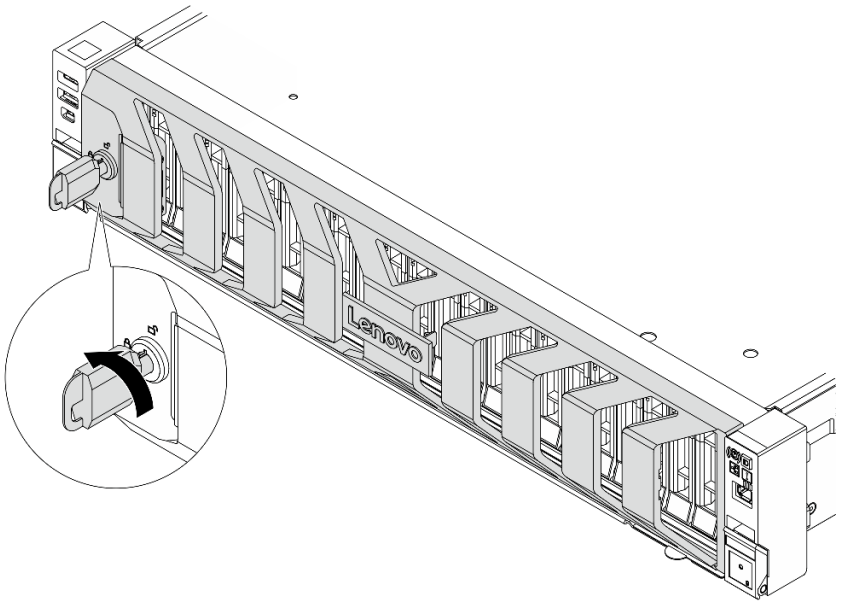

Figure 318. Locking the security bezel

Demo video

Watch the procedure on YouTube

Serial port module replacement

Follow the instructions in this section to remove and install a serial port module.

- "Remove a serial port module" on page 308
- "Install a serial port module" on page 310

Remove a serial port module

Follow the instructions in this section to remove a serial port module.

About this task

Attention:

- Read "Installation Guidelines" on page 1 and "Safety inspection checklist" on page 2 to ensure that you work safely.
- Power off the server and peripheral devices and disconnect the power cords and all external cables. See "Power off the server" on page 27.
- Prevent exposure to static electricity, which might lead to system halt and loss of data, by keeping static-sensitive components in their static-protective packages until installation, and handling these devices with an electrostatic-discharge wrist strap or other grounding system.

Procedure

Step 1. Make preparation for the task.

a. If the server is installed in a rack, slide the server out on its rack slide rails to gain access to the top cover, or remove the server from the rack. See "Server replacement" on page 34.

b. Remove the top cover. See "Remove the top cover" on page 335.

c. Disconnect the cable of the serial port module from the system board assembly.

Attention: To avoid damaging the system board assembly, make sure to follow the instructions in ***Internal Cable Routing Guide*** when disconnecting cables from the system board assembly.

Step 2. Remove the riser cage with the serial port module installed.

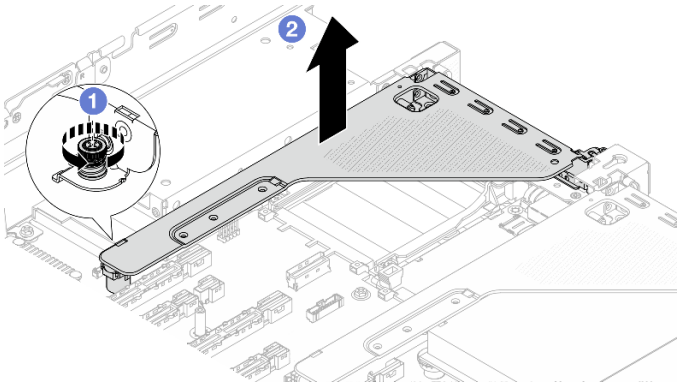

Figure 319. Removing the riser assembly

a. 1 Loosen the screw that locks the riser cage.

b. 2 Lift the riser assembly out of chassis.

Step 3. Remove the serial port module from the riser cage.

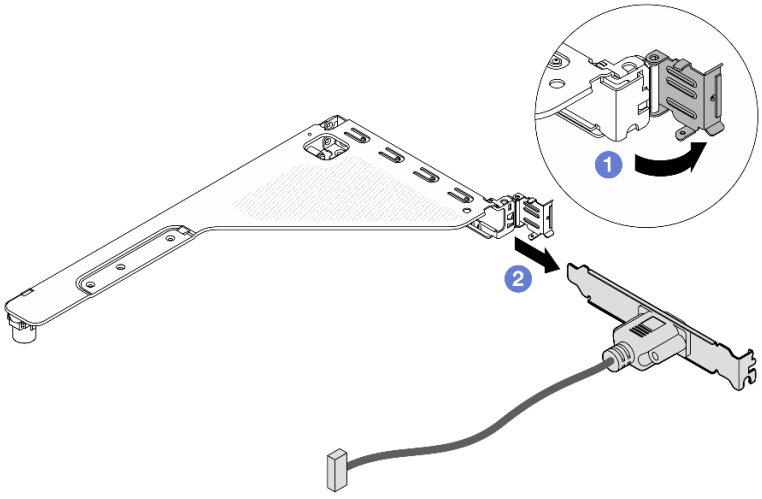

Figure 320. Removing the serial port module

a. 1 Open the retention latch.

b. 2 Slide the serial port module out of the riser cage.

Step 4. (Optional) If you need to replace the serial port bracket, use a 5 mm wrench to disassemble the serial port cable from the bracket.

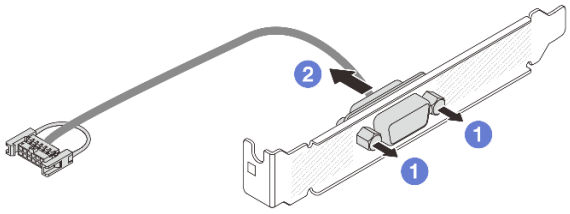

Figure 321. Disassembling the serial port module

a. 1 Loosen the two screws.
b. 2 Pull out the serial port cable from the bracket.

After you finish

1. Install a new serial port module, a PCIe adapter, or a filler to cover the place. See "Install a serial port module" on page 310 or "Install a rear riser assembly" on page 302.
2. If you are instructed to return the component or optional device, follow all packaging instructions, and use any packaging materials for shipping that are supplied to you.

Install a serial port module

Follow the instructions in this section to install a serial port module.

About this task

Attention:

- Read "Installation Guidelines" on page 1 and "Safety inspection checklist" on page 2 to ensure that you work safely.
- Power off the server and peripheral devices and disconnect the power cords and all external cables. See "Power off the server" on page 27.
- Prevent exposure to static electricity, which might lead to system halt and loss of data, by keeping static-sensitive components in their static-protective packages until installation, and handling these devices with an electrostatic-discharge wrist strap or other grounding system.

Procedure

Step 1. Touch the static-protective package that contains the new part to any unpainted surface on the outside of the server. Then, take the new part out of the package and place it on a static-protective surface.

Step 2. Use a 5 mm wrench to install the serial port cable into the bracket.

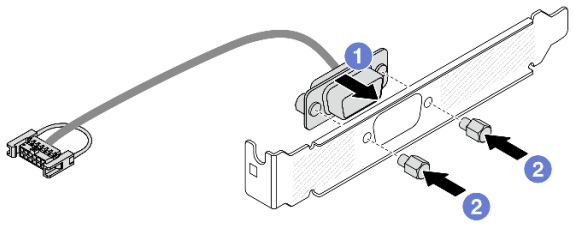

Figure 322. Assembling the serial port module

a. 1 Align the connector of the serial port cable with the holes in the bracket.

b. 2 Install the two screws to secure the cable connector into the bracket.

Step 3. Install the serial port module to the riser cage.

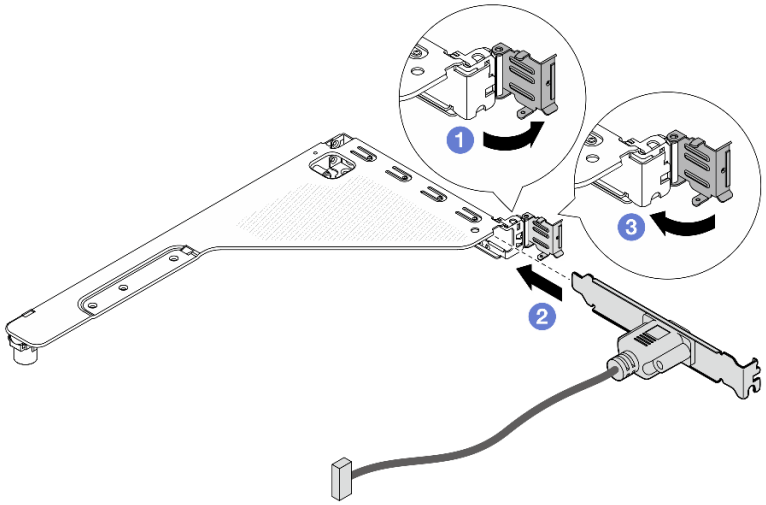

Figure 323. Installing the serial port module

a. 1 Open the retention latch on the riser cage.

b. 2 Install the serial port module to the riser cage.

c. 3 Close the retention latch and ensure that the serial port module is securely installed.

Step 4. Install the riser assembly.

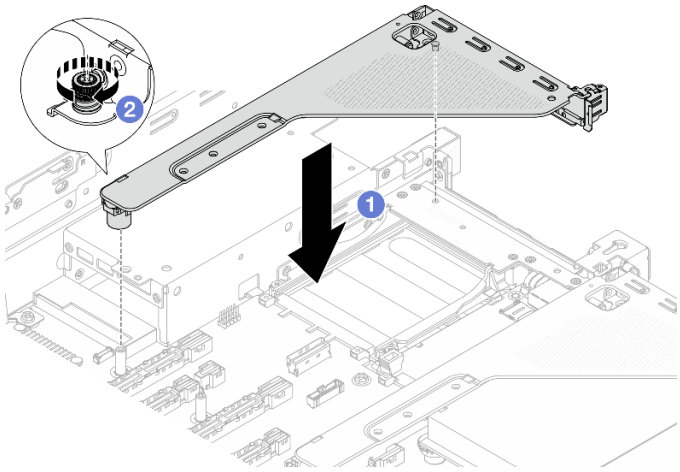

Figure 324. Installing the riser assembly

a. 1 Lower the riser assembly into the chassis.

b. 2 Tighten the screw to secure the riser cage.

Step 5. Connect the cable of the serial port module to the system board assembly. See ***Internal Cable Routing Guide***.

After you finish

1. Complete the parts replacement. See "Complete the parts replacement" on page 341.
2. From the UEFI Setup page, click **System Settings → Devices and I/O Ports → Console Redirection Settings**. Change both **Console Redirection** and **SP Redirection** setting to **Enabled**.
3. To enable the serial port module on Linux or Microsoft Windows, do one of the followings according to the installed operating system:

   Note: If the Serial over LAN (SOL) or Emergency Management Services (EMS) feature is enabled, the serial port will be hidden on Linux and Microsoft Windows. Therefore, it is required to disable SOL and EMS to use the serial port on operating systems for serial devices.

   - For Linux:

     Open the ipmitool and enter the following command to disable the Serial over LAN (SOL) feature:

     ```
     -I lanplus -H IP -U USERID -P PASSWORD sol deactivate
     ```

   - For Microsoft Windows:

     a. Open the ipmitool and enter the following command to disable the SOL feature:

     ```
     -I lanplus -H IP -U USERID -P PASSWORD sol deactivate
     ```

     b. Open Windows PowerShell and enter the following command to disable the Emergency Management Services (EMS) feature:

     ```
     Bcdedit /ems off
     ```

     c. Restart the server to ensure that the EMS setting takes effect.

System board assembly replacement (trained technician only)

Follow the instructions in this section to remove and install the system board assembly.

Important:
- This task must be operated by trained technicians that are certified by Lenovo Service. Do not attempt to remove or install the part without proper training and qualification.
- When the server has a Compute Complex Neptune Core Module installed, you must apply for a shipping bracket FRU first if you need to install or remove the system board assembly or processor. However, when replacing the old Compute Complex Neptune Core Module with a new one, you do not need to apply for a shipping bracket FRU as the new module package contains it.

S017



CAUTION:
Hazardous moving fan blades nearby. Keep fingers and other body parts away.

CAUTION:



The heat sinks and processors might be very hot. Turn off the server and wait several minutes to let the server cool before removing the server cover.

The following illustration shows the layout of the system board assembly which contains the system I/O board (DC-SCM) and the processor board.

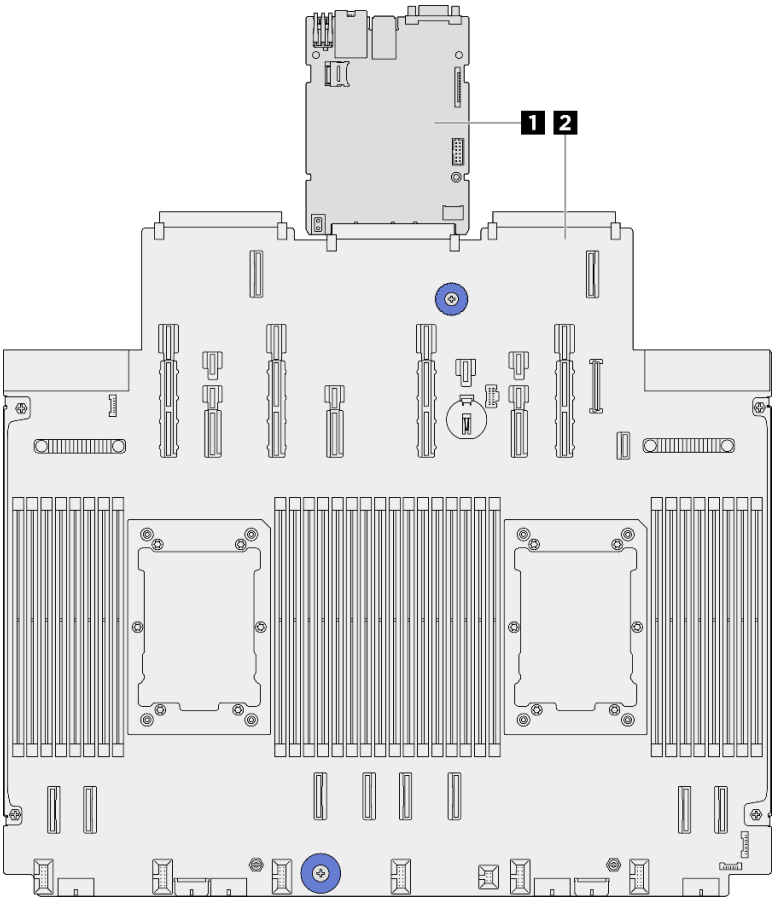

Figure 325. System-board-assembly layout

1 System I/O board (DC-SCM)	2 Processor board

- "System I/O board replacement (trained technicians only)" on page 314
- "Processor board replacement (trained technicians only)" on page 322

System I/O board replacement (trained technicians only)

Follow the instructions in this section to remove and install the system I/O board, also known as Datacenter Secure Control Module (DC-SCM).

Important: This task must be operated by trained technicians that are certified by Lenovo Service. Do not attempt to remove or install the part without proper training and qualification.

Remove the system I/O board

Follow the instructions in this section to remove the system I/O board, also known as Datacenter Secure Control Module (DC-SCM).

About this task

Important:

- This task must be operated by trained technicians that are certified by Lenovo Service. Do not attempt to remove or install the part without proper training and qualification.

- When removing the memory modules, label the slot number on each memory module, remove all the memory modules from the system board assembly, and set them aside on a static-protective surface for reinstallation.
- **When disconnecting cables, make a list of each cable and record the connectors the cable is connected to, and use the record as a cabling checklist after installing the new system board assembly.**

Attention:

- Read "Installation Guidelines" on page 1 and "Safety inspection checklist" on page 2 to ensure that you work safely.
- Power off the server and peripheral devices and disconnect the power cords and all external cables. See "Power off the server" on page 27.
- Prevent exposure to static electricity, which might lead to system halt and loss of data, by keeping static-sensitive components in their static-protective packages until installation, and handling these devices with an electrostatic-discharge wrist strap or other grounding system.

CAUTION:
Hazardous moving parts. Keep fingers and other body parts away.

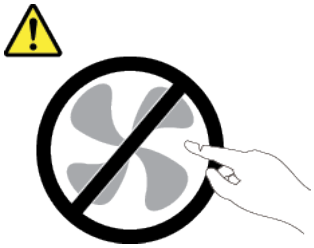

CAUTION:



The heat sinks and processors might be very hot. Turn off the server and wait several minutes to let the server cool before removing the server cover.

S002



CAUTION:
The power-control button on the device and the power switch on the power supply do not turn off the electrical current supplied to the device. The device also might have more than one power cord. To remove all electrical current from the device, ensure that all power cords are disconnected from the power source.

Procedure

Step 1. Make preparation for this task.

a. Record all system configuration information, such as Lenovo XClarity Controller IP addresses, vital product data, and the machine type, model number, serial number, Universally Unique Identifier, and asset tag of the server.

b. Save the system configuration to an external device with Lenovo XClarity Essentials.

c. Save the system event log to external media.

d. Power off the server and peripheral devices and disconnect the power cords and all external cables. See “Power off the server” on page 27.

e. If the server is installed in a rack, slide the server out on its rack slide rails to gain access to the top cover, or remove the server from the rack. See “Server replacement” on page 34.

f. Remove the top cover. See “Remove the top cover” on page 335.

g. If your server comes with an air baffle or a middle drive cage, remove it first.
- “Remove the air baffle” on page 54
- “Remove the middle drive cage and drive backplane” on page 219

h. Remove the system fan cage. See “Remove the system fan cage” on page 333.

i. Record where the cables are connected to the system board assembly; then, disconnect all the cables.

Attention: To avoid damaging the system board assembly, make sure to follow the instructions in ***Internal Cable Routing Guide*** when disconnecting cables from the system board assembly.

j. Remove all the following components if they are installed, and put them in a safe, static-protective place.
- “Rear drive cage replacement” on page 271
- “Remove an internal CFF adapter” on page 101
- “Remove a rear riser assembly” on page 291
- “Remove the rear OCP module” on page 286
- “Remove the management NIC adapter” on page 165
- “Remove the USB I/O board” on page 338
- “Remove a memory module” on page 209
- “Processor and heat sink replacement (trained technician only)” on page 236
- “Remove the CMOS battery (CR2032)” on page 62

k. Pull out the power supply units slightly. Ensure that they are disconnected from the system board assembly.

Step 2. Remove the system board assembly.

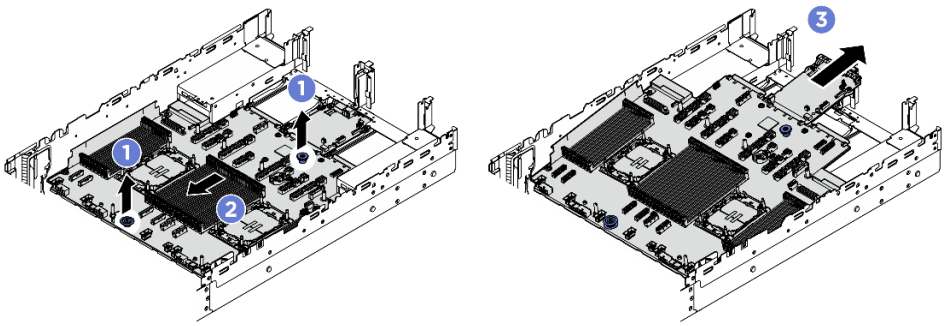

Figure 326. Removing the system board assembly

a. 1 Lift the two lift handles at the same time.

b. 2 Slide the system board assembly towards the front of the chassis until it stops.

c. 3 Tilt and lift the system board assembly out of the chassis.

Step 3. Separate the system I/O board from the processor board.

Note: To prevent the contact of the system I/O board from damage, pinch the handle on the system I/O board and pull out the system I/O board outward. During the entire pulling action, ensure that the system I/O board remains as horizontal as possible.

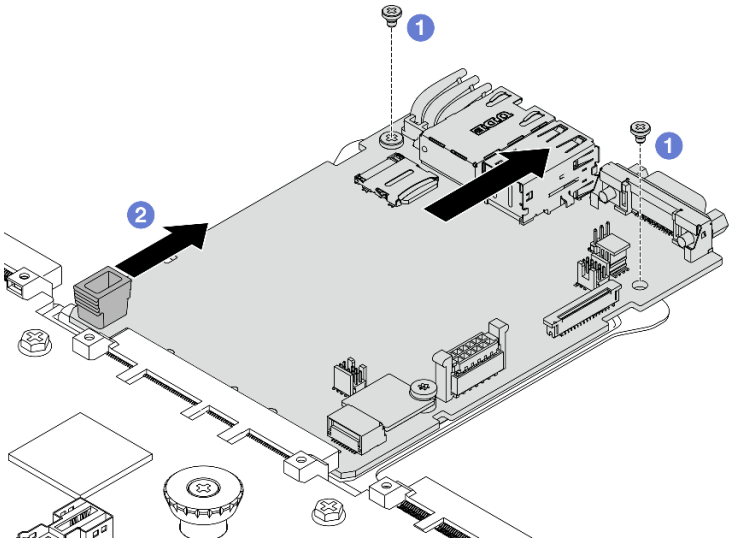

Figure 327. Separating the system I/O board from the processor board

a. 1 Remove the screws that secure the system I/O board.

b. 2 Pinch the handle and slide the system I/O board towards the rear to disengage it from the processor board.

Step 4. Remove the MicroSD card from the system I/O board. See "Remove the MicroSD card" on page 216.

After you finish

- If you are instructed to return the component or optional device, follow all packaging instructions, and use any packaging materials for shipping that are supplied to you.

Demo video

Watch the procedure on YouTube

Install the system I/O board

Follow the instructions in this section to install the system I/O board, also known as Datacenter Secure Control Module (DC-SCM).

About this task

Important: This task must be operated by trained technicians that are certified by Lenovo Service. Do not attempt to remove or install the part without proper training and qualification.

Attention:

- Read "Installation Guidelines" on page 1 and "Safety inspection checklist" on page 2 to ensure that you work safely.

- Power off the server and peripheral devices and disconnect the power cords and all external cables. See "Power off the server" on page 27.
- Prevent exposure to static electricity, which might lead to system halt and loss of data, by keeping static-sensitive components in their static-protective packages until installation, and handling these devices with an electrostatic-discharge wrist strap or other grounding system.

Firmware and driver download: You might need to update the firmware or driver after replacing a component.

- Go to https://datacentersupport.lenovo.com/products/servers/thinksystem/sr650v4/downloads/driver-list/ to see the latest firmware and driver updates for your server.
- Go to "Update the firmware" in *User Guide* or *System Configuration Guide* for more information on firmware updating tools.

Procedure

Step 1. Touch the static-protective package that contains the new part to any unpainted surface on the outside of the server. Then, take the new part out of the package and place it on a static-protective surface.

Step 2. Install the MicroSD card removed from the old system I/O board onto the new system I/O board. See "Install the MicroSD card" on page 217.

Step 3. Install the new system I/O board onto the processor board.

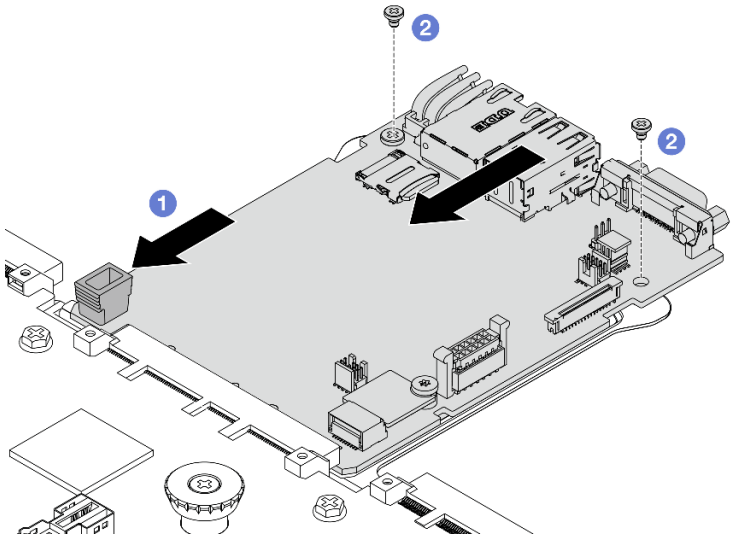

Figure 328. Installing the system I/O board onto the processor board

a. 1 Align the system I/O board with the connector on the processor board, and use both hands to push the system I/O board and slightly insert it into the connector.

Note: To prevent the contact of the system I/O board from damage, ensure that the system I/O board is aligned correctly with the connector on the processor board, and remains as horizontal as possible during the insertion.

b. 2 Install the screws to fix the system I/O board into place.

Step 4. Install the system board assembly into the server.

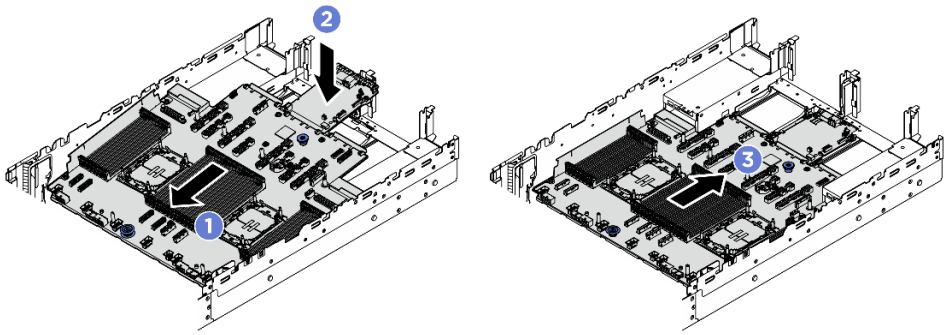

Figure 329. Installing the system board assembly

a. 1 Insert the front end of the system board assembly towards the front of the chassis until it stops.

b. 2 Lower the other end down into the chassis.

c. 3 Slide the system board assembly towards the rear of the chassis until it clicks into place. Ensure that rear connectors on the system I/O board are inserted into the corresponding holes in the rear panel.

After you finish

1. Install any components that you have removed:
   - "Install a processor and heat sink" on page 242
   - "Install a memory module" on page 212
   - "Install the USB I/O board" on page 340
   - "Install the management NIC adapter" on page 166
   - "Install the rear OCP module" on page 287
   - "Install a rear riser assembly" on page 302
   - "Install an internal CFF adapter" on page 102
   - Rear drive cage replacement
   - Install the middle drive backplane and drive cage
2. Push the power supply units in place. Ensure that they are connected to the system board assembly.
3. Reconnect all the required cables to the same connectors on the system board assembly. See ***Internal Cable Routing Guide***.
4. Ensure that all components have been reassembled correctly and that no tools or loose screws are left inside the server.
5. Reinstall the top cover. See "Install the top cover" on page 337.
6. If the sever was installed in a rack, reinstall the server into the rack. See "Server replacement" on page 34.
7. Reconnect external cables and power cords to the server.

   Attention: To avoid component damage, connect the power cords last.
8. Power on the server and any peripheral devices. See "Power on the server" on page 27.
9. If hiding TPM or updating TPM firmware is needed, see "Hide/observe TPM" on page 320 or "Update the TPM firmware" on page 320.
10. Optionally, enable UEFI Secure Boot. See "Enable UEFI Secure Boot" on page 321.

Demo video

Watch the procedure on YouTube

Hide/observe TPM

TPM is enabled by default to encrypt data transfer for system operation. Optionally, you can disable TPM using Unified Extensible Firmware Interface (UEFI) or Lenovo XClarity Essentials OneCLI.

Using UEFI

For details, see “TPM Device” in *UEFI User Guide* at https://pubs.lenovo.com/uefi-overview/.

Using Lenovo XClarity Essentials OneCLI

To disable TPM, do the following:

1. Download and install Lenovo XClarity Essentials OneCLI.

   To download Lenovo XClarity Essentials OneCLI, go to the following site:

   https://datacentersupport.lenovo.com/solutions/HT116433

2. Run the following command:

   `OneCli.exe config set UEFI.TrustedComputingGroup_TPMDevice "Disabled" -b <userid>:<password>@<ip_address>`

   where:

   - *<userid>:<password>* are the credentials used to access the BMC (Lenovo XClarity Controller interface) of your server. The default user ID is USERID, and the default password is PASSW0RD (zero, not an uppercase o)
   - *<ip_address>* is the IP address of the BMC.

   Example:

```
D:\onecli>OneCli.exe config set UEFI.TrustedComputingGroup_TPMDevice "Disabled" --bmc USERID:PASSWORD@10.245.38.64
[1s]Certificate check finished [100%][=======================================================================================>]
Start to connect BMC at 10.245.38.64 to apply config set
Invoking SET command ...
UEFI.TrustedComputingGroup_TPMDevice=Disabled
Changes completed successfully, but these changes will not take effect until next reboot.
Succeed.
```

3. Reboot the system.

If you want to enable TPM again, run the following command and reboot the system:
`OneCli.exe config set UEFI.TrustedComputingGroup_TPMDevice "Enabled" -b <userid>:<password>@<ip_address>`

Example:

```
D:\onecli>OneCli.exe config set UEFI.TrustedComputingGroup_TPMDevice "Enabled" --bmc USERID:PASSWORD@10.245.38.64
[1s]Certificate check finished [100%][=======================================================================================>]
Start to connect BMC at 10.245.38.64 to apply config set
Invoking SET command ...
UEFI.TrustedComputingGroup_TPMDevice=Enabled
Changes completed successfully, but these changes will not take effect until next reboot.
Succeed.
```

Update the TPM firmware

Optionally, you can update the TPM firmware using Lenovo XClarity Essentials OneCLI.

Note: TPM firmware update is irreversible. After update, the TPM firmware cannot be downgraded to earlier versions.

TPM firmware version

Follow the procedure below to see the TPM firmware version:

From Lenovo XClarity Provisioning Manager

1. Start the server and press the key specified in the on-screen instructions to display the Lenovo XClarity Provisioning Manager interface. (For more information, see the “Startup” section in the LXPM documentation compatible with your server at https://pubs.lenovo.com/lxpm-overview/.)
2. If the power-on Administrator password is required, enter the password.
3. From the UEFI Setup page, click **System Settings → Security → Trusted Platform Module → TPM 2.0 → TPM Firmware Version**.

Update the TPM firmware

To update the TPM firmware, do the following:

1. Download and install Lenovo XClarity Essentials OneCLI.

   To download Lenovo XClarity Essentials OneCLI, go to the following site:

   https://datacentersupport.lenovo.com/solutions/HT116433

2. Run the following command:
   `OneCli.exe config set UEFI.TrustedComputingGroup_DeviceOperation UpdatetoTPM2_0firmwareversion<x_x_x_x> --bmc <userid>:<password>@<ip_address>`

   where:

   - <*x_x_x_x*> is the target TPM version.

     e.g. TPM 2.0 (7.2.1.0) -> TPM 2.0 (7.2.2.0):

     `OneCli.exe config set UEFI.TrustedComputingGroup_DeviceOperation UpdatetoTPM2_0firmwareversion7_2_2_0 --bmc <userid>:<password>@<ip_address>`

   - <*userid*>:<*password*> are the credentials used to access the BMC (Lenovo XClarity Controller interface) of your server. The default user ID is USERID, and the default password is PASSW0RD (zero, not an uppercase o).
   - <*ip_address*> is the IP address of the BMC.

Enable UEFI Secure Boot

Optionally, you can enable UEFI Secure Boot.

There are two methods available to enable UEFI Secure Boot:

- From Lenovo XClarity Provisioning Manager

  To enable UEFI Secure Boot from Lenovo XClarity Provisioning Manager:

  1. Start the server and press the key specified in the on-screen instructions to display the Lenovo XClarity Provisioning Manager interface. (For more information, see the “Startup” section in the LXPM documentation compatible with your server at https://pubs.lenovo.com/lxpm-overview/.)
  2. If the power-on Administrator password is required, enter the password.
  3. From the UEFI Setup page, click **System Settings → Security → Secure Boot Configuration → Secure Boot Setting**.
  4. Enable Secure Boot and save the settings.

  Note: If disabling UEFI secure boot is needed, select Disable in step 4.

- From Lenovo XClarity Essentials OneCLI

  To enable UEFI Secure Boot from Lenovo XClarity Essentials OneCLI:

  1. Download and install Lenovo XClarity Essentials OneCLI.

To download Lenovo XClarity Essentials OneCLI, go to the following site:

https://datacentersupport.lenovo.com/solutions/HT116433

2. Run the following command to enable Secure Boot:
`OneCli.exe config set UEFI.SecureBootConfiguration_SecureBootSetting Enabled --bmc <userid>:<password>@<ip_address>`

   where:

   – *<userid>:<password>* are the credentials used to access the BMC (Lenovo XClarity Controller interface) of your server. The default user ID is USERID, and the default password is PASSW0RD (zero, not an uppercase o)

   – *<ip_address>* is the IP address of the BMC.

   For more information about the Lenovo XClarity Essentials OneCLI `set` command, see:

   https://pubs.lenovo.com/lxce-onecli/onecli_r_set_command

Note: If disabling UEFI secure boot is needed, run the following command:
`OneCli.exe config set UEFI.SecureBootConfiguration_SecureBootSetting Disabled --bmc <userid>:<password>@<ip_address>`

Processor board replacement (trained technicians only)

Follow the instructions in this section to remove and install the processor board.

Important: This task must be operated by trained technicians that are certified by Lenovo Service. Do not attempt to remove or install the part without proper training and qualification.

Remove the processor board

Follow the instructions in this section to remove the processor board.

About this task

Important:

- This task must be operated by trained technicians that are certified by Lenovo Service. Do not attempt to remove or install the part without proper training and qualification.
- When removing the memory modules, label the slot number on each memory module, remove all the memory modules from the system board assembly, and set them aside on a static-protective surface for reinstallation.
- **When disconnecting cables, make a list of each cable and record the connectors the cable is connected to, and use the record as a cabling checklist after installing the new system board assembly.**

Attention:

- Read “Installation Guidelines” on page 1 and “Safety inspection checklist” on page 2 to ensure that you work safely.
- Power off the server and peripheral devices and disconnect the power cords and all external cables. See “Power off the server” on page 27.
- Prevent exposure to static electricity, which might lead to system halt and loss of data, by keeping static-sensitive components in their static-protective packages until installation, and handling these devices with an electrostatic-discharge wrist strap or other grounding system.

CAUTION:
Hazardous moving parts. Keep fingers and other body parts away.



CAUTION:



The heat sinks and processors might be very hot. Turn off the server and wait several minutes to let the server cool before removing the server cover.

S002

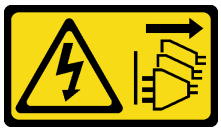

CAUTION:
The power-control button on the device and the power switch on the power supply do not turn off the electrical current supplied to the device. The device also might have more than one power cord. To remove all electrical current from the device, ensure that all power cords are disconnected from the power source.

Procedure

Step 1. Make preparation for this task.

a. Record all system configuration information, such as Lenovo XClarity Controller IP addresses, vital product data, and the machine type, model number, serial number, Universally Unique Identifier, and asset tag of the server.

b. Save the system configuration to an external device with Lenovo XClarity Essentials.

c. Save the system event log to external media.

d. Power off the server and peripheral devices and disconnect the power cords and all external cables. See “Power off the server” on page 27.

e. If the server is installed in a rack, slide the server out on its rack slide rails to gain access to the top cover, or remove the server from the rack. See “Server replacement” on page 34.

f. Remove the top cover. See “Remove the top cover” on page 335.

g. If your server comes with an air baffle or a middle drive cage, remove it first.
- “Remove the air baffle” on page 54
- “Remove the middle drive cage and drive backplane” on page 219

h. Remove the system fan cage. See “Remove the system fan cage” on page 333.

i. Record where the cables are connected to the system board assembly; then, disconnect all the cables.

Attention: To avoid damaging the system board assembly, make sure to follow the instructions in ***Internal Cable Routing Guide*** when disconnecting cables from the system board assembly.

j. Remove all the following components if they are installed, and put them in a safe, static-protective place.
   - “Rear drive cage replacement” on page 271
   - “Remove an internal CFF adapter” on page 101
   - “Remove a rear riser assembly” on page 291
   - “Remove the rear OCP module” on page 286
   - “Remove the management NIC adapter” on page 165
   - “Remove the USB I/O board” on page 338
   - “Remove a memory module” on page 209
   - “Processor and heat sink replacement (trained technician only)” on page 236
   - “Remove the CMOS battery (CR2032)” on page 62

k. Pull out the power supply units slightly. Ensure that they are disconnected from the system board assembly.

Step 2. Remove the system board assembly.

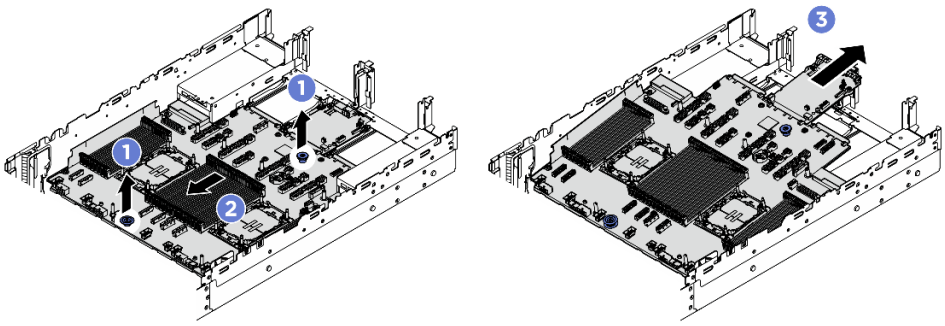

Figure 330. Removing the system board assembly

a. 1 Lift the two lift handles at the same time.

b. 2 Slide the system board assembly towards the front of the chassis until it stops.

c. 3 Tilt and lift the system board assembly out of the chassis.

Step 3. Separate the system I/O board from the processor board.

Note: To prevent the contact of the system I/O board from damage, pinch the handle on the system I/O board and pull out the system I/O board outward. During the entire pulling action, ensure that the system I/O board remains as horizontal as possible.

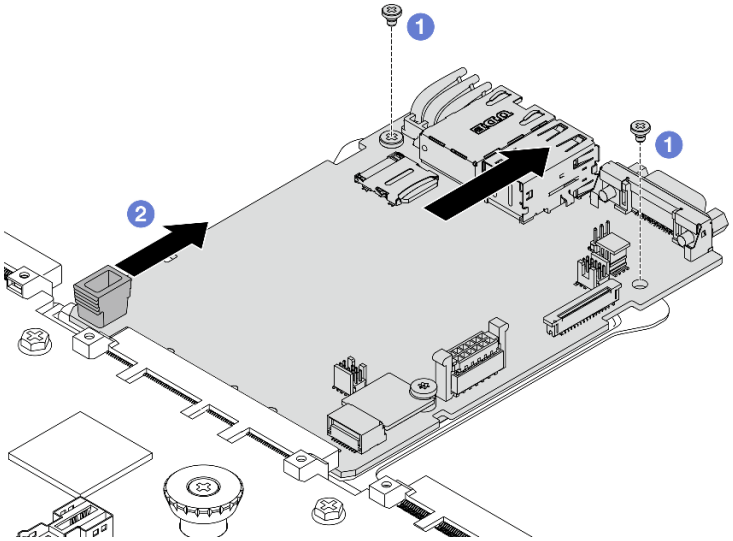

Figure 331. Separating the system I/O board from the processor board

a. 1 Remove the screws that secure the system I/O board.

b. 2 Pinch the handle and slide the system I/O board towards the rear to disengage it from the processor board.

After you finish

- If you are instructed to return the component or optional device, follow all packaging instructions, and use any packaging materials for shipping that are supplied to you.

  Important: Before you return the processor board, make sure that the CPU socket is covered. There is a CPU external cap covering the CPU socket on the new processor board. Slide the CPU external cap out from the CPU socket on the new processor board, and install the external cap on the CPU socket on the removed processor board.
- If you are planning to recycle the system board assembly, follow the instructions in "Disassemble the system board assembly for recycle" in *User Guide* for compliance with local regulations.

Demo video

Watch the procedure on YouTube

Install the processor board

Follow the instructions in this section to install the processor board.

About this task

Important: This task must be operated by trained technicians that are certified by Lenovo Service. Do not attempt to remove or install the part without proper training and qualification.

Attention:

- Read "Installation Guidelines" on page 1 and "Safety inspection checklist" on page 2 to ensure that you work safely.
- Power off the server and peripheral devices and disconnect the power cords and all external cables. See "Power off the server" on page 27.

- Prevent exposure to static electricity, which might lead to system halt and loss of data, by keeping static-sensitive components in their static-protective packages until installation, and handling these devices with an electrostatic-discharge wrist strap or other grounding system.

Firmware and driver download: You might need to update the firmware or driver after replacing a component.

- Go to https://datacentersupport.lenovo.com/products/servers/thinksystem/sr650v4/downloads/driver-list/ to see the latest firmware and driver updates for your server.
- Go to "Update the firmware" in *User Guide* or *System Configuration Guide* for more information on firmware updating tools.

Procedure

Step 1. Touch the static-protective package that contains the new part to any unpainted surface on the outside of the server. Then, take the new part out of the package and place it on a static-protective surface.

Step 2. Install the existing system I/O board onto the new processor board.

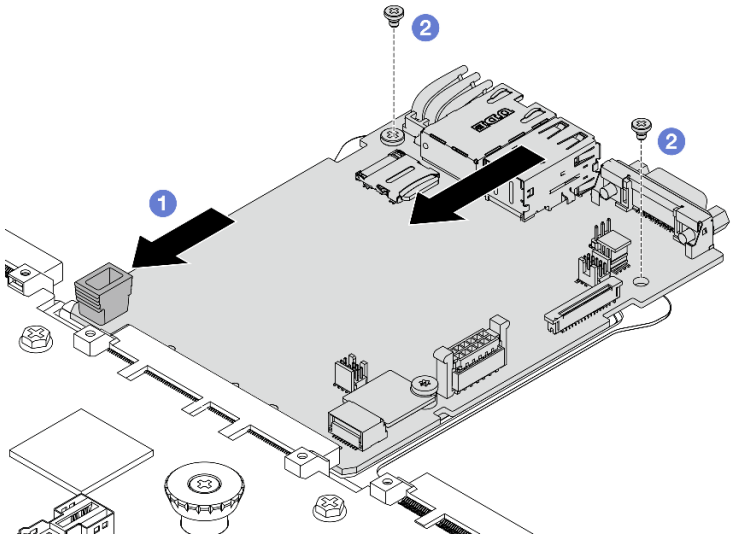

Figure 332. Installing the system I/O board onto the processor board

a. 1 Align the system I/O board with the connector on the processor board, and use both hands to push the system I/O board and slightly insert it into the connector.

Note: To prevent the contact of the system I/O board from damage, ensure that the system I/O board is aligned correctly with the connector on the processor board, and remains as horizontal as possible during the insertion.

b. 2 Install the screws to fix the system I/O board into place.

Step 3. Install the system board assembly into the server.

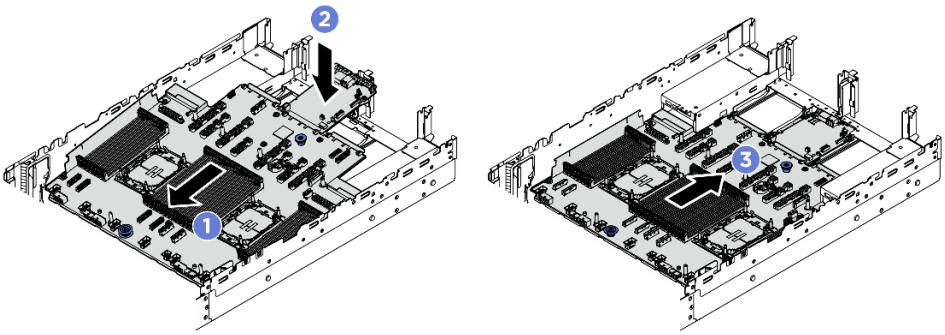

Figure 333. Installing the system board assembly

a. 1 Insert the front end of the system board assembly towards the front of the chassis until it stops.

b. 2 Lower the other end down into the chassis.

c. 3 Slide the system board assembly towards the rear of the chassis until it clicks into place. Ensure that rear connectors on the system I/O board are inserted into the corresponding holes in the rear panel.

After you finish

1. Install any components that you have removed:
   - "Install a processor and heat sink" on page 242
   - "Install a memory module" on page 212
   - "Install the USB I/O board" on page 340
   - "Install the management NIC adapter" on page 166
   - "Install the rear OCP module" on page 287
   - "Install a rear riser assembly" on page 302
   - "Install an internal CFF adapter" on page 102
   - Rear drive cage replacement
   - Install the middle drive backplane and drive cage
2. Push the power supply units in place. Ensure that they are connected to the system board assembly.
3. Reconnect all the required cables to the same connectors on the system board assembly. See ***Internal Cable Routing Guide***.
4. Reinstall the fan cage with fans. See "Install the system fan cage" on page 334.
5. Reinstall the air baffle. See "Install the air baffle" on page 56.
6. Ensure that all components have been reassembled correctly and that no tools or loose screws are left inside the server.
7. Reinstall the top cover. See "Install the top cover" on page 337.
8. If the sever was installed in a rack, reinstall the server into the rack. See "Server replacement" on page 34.
9. Reconnect external cables and power cords to the server.

   Attention: To avoid component damage, connect the power cords last.
10. Power on the server and any peripheral devices. See "Power on the server" on page 27.
11. Update the vital product data (VPD). See "Update the Vital Product Data (VPD)" on page 328.

    Machine type number and serial number can be found on the ID label, see "Identify the server and access to the Lenovo XClarity Controller" in *User Guide* or *System Configuration Guide*.

Demo video

Watch the procedure on YouTube

Update the Vital Product Data (VPD)

Use this topic to update the Vital Product Data (VPD).

- **(Required)** Machine type
- **(Required)** Serial number
- **(Required)** System model
- (Optional) Asset tag
- (Optional) UUID

Recommended tools:

- Lenovo XClarity Provisioning Manager
- Lenovo XClarity Essentials OneCLI commands

Using Lenovo XClarity Provisioning Manager

Steps:

1. Start the server and press the key according to the on-screen instructions. The Lenovo XClarity Provisioning Manager interface is displayed by default.
2. Click ⚙ on the top right corner of the Lenovo XClarity Provisioning Manager main interface.
3. Click **Update VPD**; then, follow on-screen instructions to update the VPD.

Using Lenovo XClarity Essentials OneCLI commands

- Updating **machine type**
  `onecli config set VPD.SysInfoProdName10 <m/t_model> [access_method]`
- Updating **serial number**
  `onecli config set VPD.SysInfoSerialNum10 <s/n> [access_method]`
- Updating **system model**

  `onecli config set VPD.SysInfoProdIdentifier <system model> [access_method]`
- Updating **asset tag**
  `onecli config set VPD.SysEncloseAssetTag <asset_tag> [access_method]`
- Updating **UUID**
  `onecli config createuuid VPD.SysInfoUUID [access_method]`

Variable	Description
<m/t_model>	The server machine type and model number. Type `xxxxyyyyyy`, where `xxxx` is the machine type and `yyyyyy` is the server model number.
<s/n>	The serial number on the server. Type `zzzzzzzz` (length 8-10 characters), where `zzzzzzzz` is the serial number.
<system model>	The system model on the server. Type `system yyyyyyyy`, where *yyyyyyyy* is the product identifier.

<asset_tag>	The server asset tag number. Type `aaaaaaaaaaaaaaaaaaaaaaaaaaaaaaaa`, where `aaaaaaaaaaaaaaaaaaaaaaaaaaaaaaaa` is the asset tag number.
[access_method]	The access method that you select to access the target server. • Online KCS (unauthenticated and user restricted): You can directly delete *[access_method]* from the command. • Online authenticated LAN: In this case, specify below LAN account information at the end of the OneCLI command: `--bmc-username` *<user_id>* `--bmc-password` *<password>* • Remote WAN/LAN: In this case, specify below XCC account information and IP address at the end of the OneCLI command: `--bmc` *<bmc_user_id>*:*<bmc_password>*`@`*<bmc_external_IP>* **Notes:** – *<bmc_user_id>* The BMC account name (1 of 12 accounts). The default value is USERID. – *<bmc_password>* The BMC account password (1 of 12 accounts).

System fan replacement

Follow the instructions in this section to remove and install a system fan.

- "Remove a system fan" on page 329
- "Install a system fan" on page 331

Remove a system fan

Follow the instructions in this section to remove a system fan.

About this task

S033



CAUTION:
Hazardous energy present. Voltages with hazardous energy might cause heating when shorted with metal, which might result in spattered metal, burns, or both.

S017



CAUTION:
Hazardous moving fan blades nearby. Keep fingers and other body parts away.

Attention:

- Read "Installation Guidelines" on page 1 and "Safety inspection checklist" on page 2 to ensure that you work safely.
- Prevent exposure to static electricity, which might lead to system halt and loss of data, by keeping static-sensitive components in their static-protective packages until installation, and handling these devices with an electrostatic-discharge wrist strap or other grounding system.
- When removing a hot-swap fan without powering off the server, do not touch the system fan cage. With power on, complete the replacement within 30 seconds to ensure proper operation.

Procedure

Step 1. If the server is installed in a rack, slide the server out on its rack slide rails to gain access to the top cover, or remove the server from the rack. See "Server replacement" on page 34.

Step 2. Remove the top cover. See "Remove the top cover" on page 335.

Step 3. Remove the system fan.

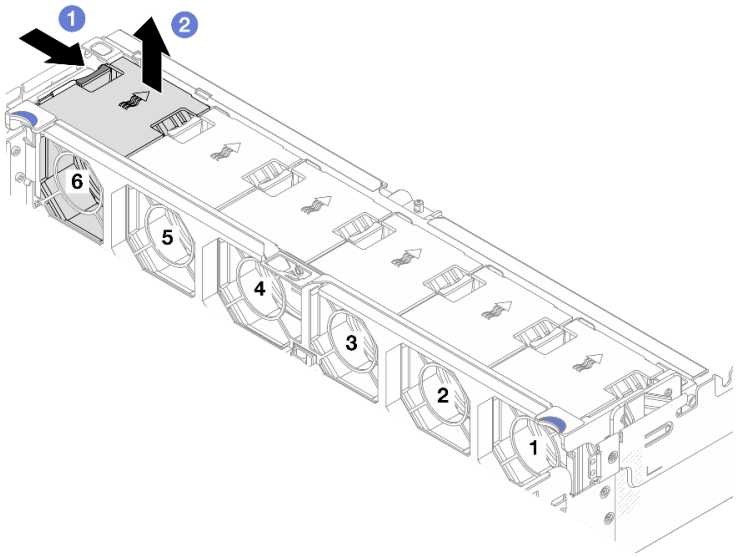

Figure 334. Removing the system fan

a. 1 Hold the fan tab on the system fan.

b. 2 Carefully lift the system fan out of the server.

After you finish

1. Install a new system fan or install a fan filler to cover the place. See "Install a system fan" on page 331.

2. If you are instructed to return the component or optional device, follow all packaging instructions, and use any packaging materials for shipping that are supplied to you.

Demo video

Watch the procedure on YouTube

Install a system fan

Follow the instructions in this section to install a system fan.

About this task

S033



CAUTION:
Hazardous energy present. Voltages with hazardous energy might cause heating when shorted with metal, which might result in spattered metal, burns, or both.

S017



CAUTION:
Hazardous moving fan blades nearby. Keep fingers and other body parts away.

Attention:

- Read “Installation Guidelines” on page 1 and “Safety inspection checklist” on page 2 to ensure that you work safely.
- Prevent exposure to static electricity, which might lead to system halt and loss of data, by keeping static-sensitive components in their static-protective packages until installation, and handling these devices with an electrostatic-discharge wrist strap or other grounding system.
- When installing a hot-swap fan without powering off the server, do not touch the system fan cage. With power on, complete the replacement within 30 seconds to ensure proper operation.

Procedure

Step 1. Touch the static-protective package that contains the new part to any unpainted surface on the outside of the server. Then, take the new part out of the package and place it on a static-protective surface.

Step 2. Position the system fan above the system fan cage, and press the system fan straight down until it is seated into place.

Note: The system fan connector on the bottom of the system fan should face the rear of the chassis.

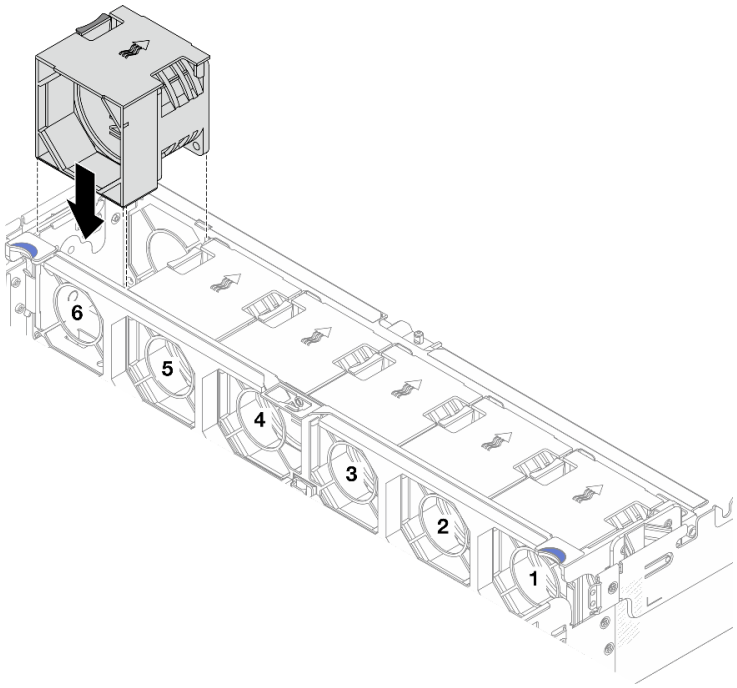

Figure 335. Installing the system fan

After you finish

Complete the parts replacement. See “Complete the parts replacement” on page 341.

Demo video

Watch the procedure on YouTube

System fan cage replacement

Follow the instructions in this section to remove and install the system fan cage.

- “Remove the system fan cage” on page 333
- “Install the system fan cage” on page 334

Remove the system fan cage

Follow the instructions in this section to remove the system fan cage.

About this task

Attention:

- Read “Installation Guidelines” on page 1 and “Safety inspection checklist” on page 2 to ensure that you work safely.
- Power off the server and peripheral devices and disconnect the power cords and all external cables. See “Power off the server” on page 27.

Procedure

Step 1. If the server is installed in a rack, slide the server out on its rack slide rails to gain access to the top cover, or remove the server from the rack. See “Server replacement” on page 34.

Step 2. Remove the top cover. See “Remove the top cover” on page 335.

Step 3. (Optional) If you are replacing the system fan cage, remove all system fans first. See “Remove a system fan” on page 329.

Note: If you are removing the system fan cage to access other components, you can remove it with the system fans installed.

Step 4. Remove the system fan cage.

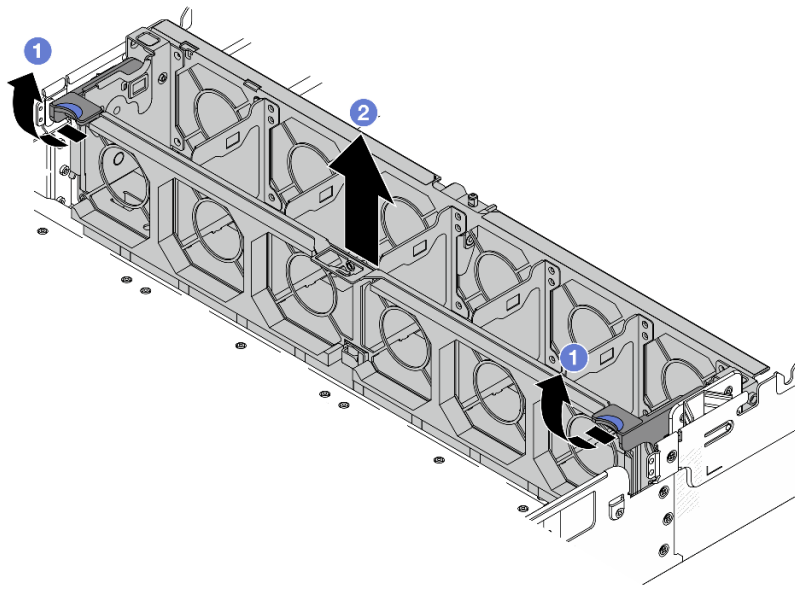

Figure 336. Removing the system fan cage

a. (1) Rotate the levers of the system fan cage to the rear of the server.

b. (2) Lift the system fan cage straight up and out of the chassis.

After you finish

If you are instructed to return the component or optional device, follow all packaging instructions, and use any packaging materials for shipping that are supplied to you.

Demo video

Watch the procedure on YouTube

Install the system fan cage

Follow the instructions in this section to install the system fan cage.

About this task

Attention:

- Read “Installation Guidelines” on page 1 and “Safety inspection checklist” on page 2 to ensure that you work safely.
- Power off the server and peripheral devices and disconnect the power cords and all external cables. See “Power off the server” on page 27.

Procedure

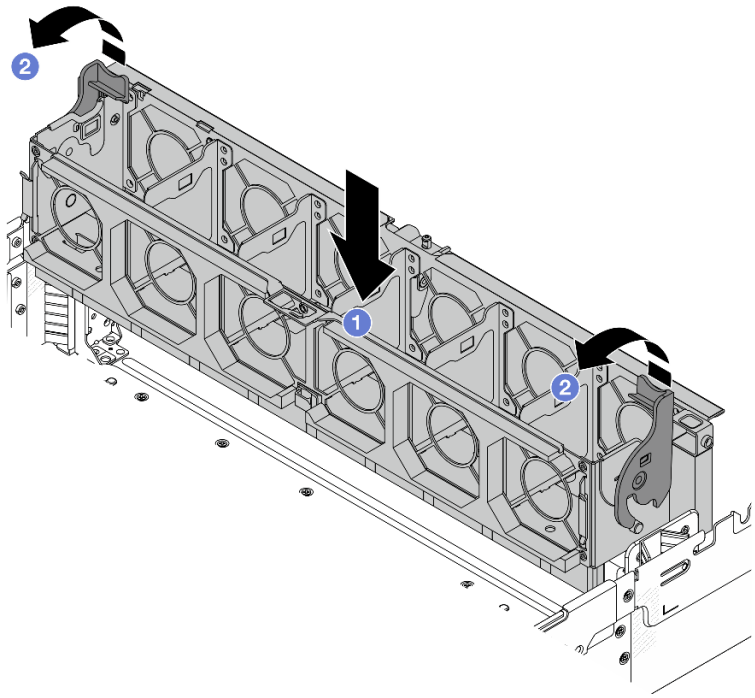

Figure 337. Installing the system fan cage

Step 1. Align the system fan cage with the mounting guides on both sides of chassis, and lower it into the chassis.

Step 2. Rotate the fan cage levers down until the fan cage clicks into place.

Note: If there are system fans installed in the system fan cage, ensure that the system fans are correctly connected to the system fan connectors on the system board assembly.

After you finish

1. If you have removed the system fans, reinstall them. See “Install a system fan” on page 331.
2. Complete the parts replacement. See “Complete the parts replacement” on page 341.

Demo video

Watch the procedure on YouTube

Top cover replacement

Follow the instructions in this section to remove and install the top cover.

- “Remove the top cover” on page 335
- “Install the top cover” on page 337

Remove the top cover

Follow the instructions in this section to remove the top cover.

About this task

S014



CAUTION:
Hazardous voltage, current, and energy levels might be present. Only a qualified service technician is authorized to remove the covers where the label is attached.

S033



CAUTION:
Hazardous energy present. Voltages with hazardous energy might cause heating when shorted with metal, which might result in spattered metal, burns, or both.

Attention:

- Read “Installation Guidelines” on page 1 and “Safety inspection checklist” on page 2 to ensure that you work safely.
- Power off the server and peripheral devices and disconnect the power cords and all external cables. See “Power off the server” on page 27.

- Operating the server with the top cover removed might damage server components. For proper cooling and airflow, install the top cover before you turn on the server.

Procedure

Step 1. If the server is installed in a rack, slide the server out on its rack slide rails to gain access to the top cover, or remove the server from the rack. See “Server replacement” on page 34.

Step 2. Remove the top cover.

Attention: Handle the top cover carefully. Dropping the top cover with the cover latch open might damage the cover latch.

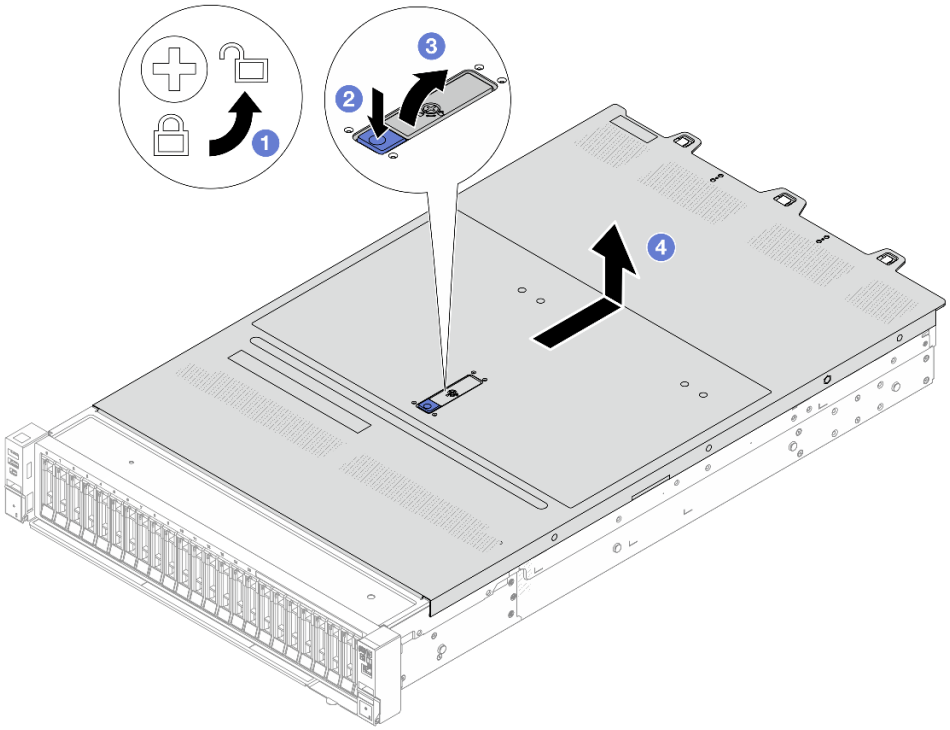

Figure 338. Removing the top cover

a. 1 Use a screwdriver to turn the cover lock to the unlocked position as shown.

b. 2 Press the release button on the cover latch. The cover latch then gets released to some extent.

c. 3 Fully open the cover latch as shown.

d. 4 Slide the top cover to the rear until it is disengaged from the chassis. Then, lift the top cover off the chassis and place the top cover on a flat clean surface.

After you finish

1. Replace any options as required or install a new top cover. See “Install the top cover” on page 337.
2. If you are instructed to return the component or optional device, follow all packaging instructions, and use any packaging materials for shipping that are supplied to you.

Demo video

Watch the procedure on YouTube

Install the top cover

Follow the instructions in this section to install the top cover.

About this task

S033



CAUTION:
Hazardous energy present. Voltages with hazardous energy might cause heating when shorted with metal, which might result in spattered metal, burns, or both.

S014



CAUTION:
Hazardous voltage, current, and energy levels might be present. Only a qualified service technician is authorized to remove the covers where the label is attached.

Attention:

- Read “Installation Guidelines” on page 1 and “Safety inspection checklist” on page 2 to ensure that you work safely.
- Power off the server and peripheral devices and disconnect the power cords and all external cables. See “Power off the server” on page 27.
- Operating the server with the top cover removed might damage server components. For proper cooling and airflow, install the top cover before you turn on the server.

Procedure

Step 1. Check your server and ensure that:

- All cables, adapters, and other components are installed and seated correctly and that you have not left loose tools or parts inside the server.
- All internal cables are connected and routed correctly. See ***Internal Cable Routing Guide***.

Step 2. Install the top cover to your server.

Attention: Handle the top cover carefully. Dropping the top cover with the cover latch open might damage the cover latch.

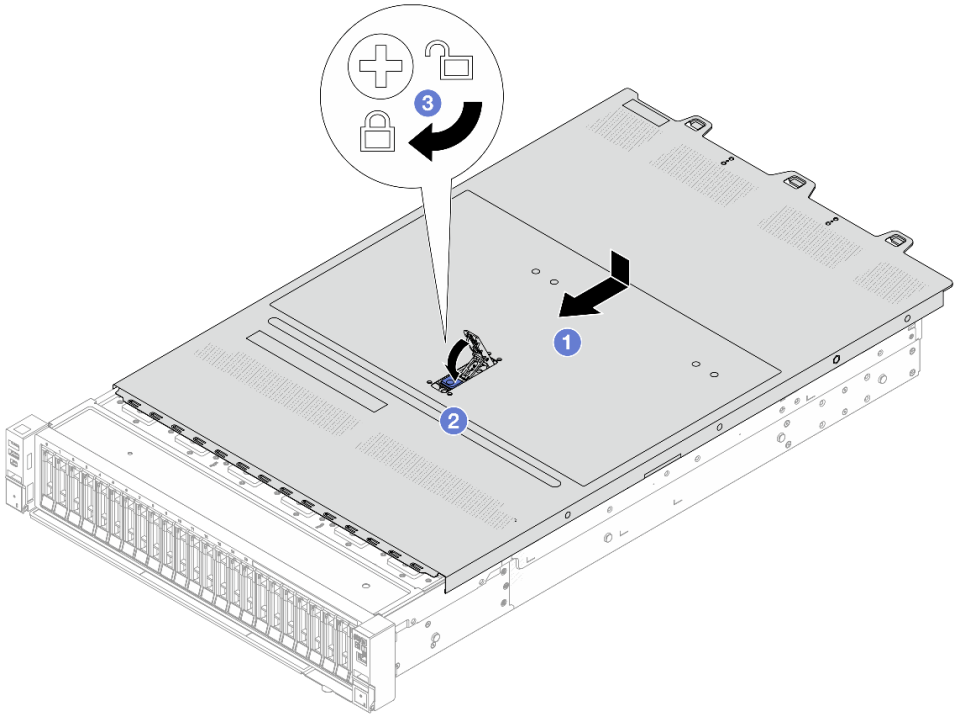

Figure 339. Installing the top cover

a. 1 Ensure that the cover latch is in the open position. Lower the top cover onto the chassis until both sides of the top cover engage the guides on both sides of the chassis. Then, slide the top cover to the front of the chassis.

   Note: Before you slide the top cover forward, ensure that all the tabs on the top cover engage the chassis correctly.

b. 2 Press down the cover latch and ensure that the cover latch is completely closed.

c. 3 Use a screwdriver to turn the cover lock to the locked position.

After you finish

Complete the parts replacement. See “Complete the parts replacement” on page 341.

Demo video

Watch the procedure on YouTube

USB I/O board replacement

Follow the instructions in this section to remove and install the ThinkSystem V4 Front & Internal USB I/O Board.

- “Remove the USB I/O board” on page 338
- “Install the USB I/O board” on page 340

Remove the USB I/O board

Follow the instructions in this section to remove the USB I/O board.

About this task

Attention:

- Read “Installation Guidelines” on page 1 and “Safety inspection checklist” on page 2 to ensure that you work safely.
- Power off the server and peripheral devices and disconnect the power cords and all external cables. See “Power off the server” on page 27.
- Prevent exposure to static electricity, which might lead to system halt and loss of data, by keeping static-sensitive components in their static-protective packages until installation, and handling these devices with an electrostatic-discharge wrist strap or other grounding system.

Procedure

Step 1. Remove the top cover. See “Remove the top cover” on page 335.

Step 2. Remove the cables connected to the USB I/O board.

Step 3. Remove the USB I/O board.

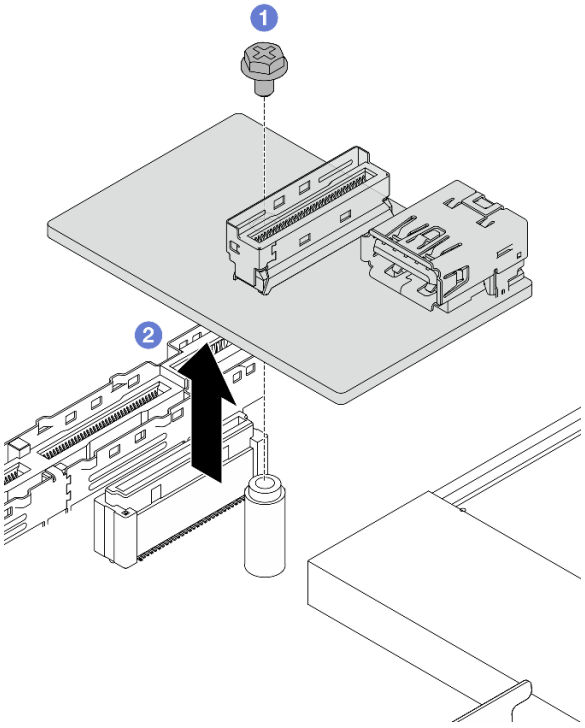

Figure 340. Removing USB I/O board

a. 1 Loosen one screw that locks the USB I/O board to the system board assembly.

b. 2 Lift the board off the connector and take it out.

After you finish

If you are instructed to return the component or optional device, follow all packaging instructions, and use any packaging materials for shipping that are supplied to you.

Demo video

Watch the procedure on YouTube

Install the USB I/O board

Follow the instructions in this section to install the USB I/O board.

About this task

Attention:

- Read “Installation Guidelines” on page 1 and “Safety inspection checklist” on page 2 to ensure that you work safely.
- Power off the server and peripheral devices and disconnect the power cords and all external cables. See “Power off the server” on page 27.
- Prevent exposure to static electricity, which might lead to system halt and loss of data, by keeping static-sensitive components in their static-protective packages until installation, and handling these devices with an electrostatic-discharge wrist strap or other grounding system.

Procedure

Step 1. Install the USB I/O board to the system board assembly.

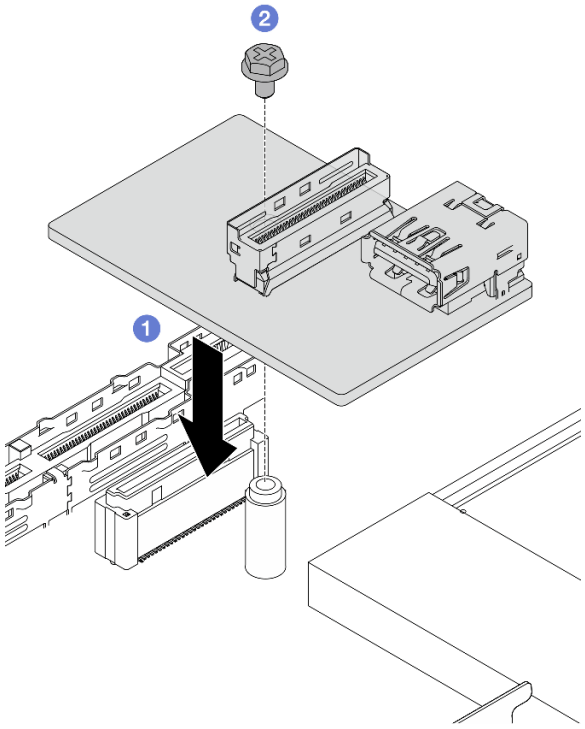

Figure 341. Installing USB I/O board

a. 1 Place the USB I/O board down as illustrated above to meet the connector on the system board assembly.

b. 2 Tighten one screw to secure the board.

Step 2. Connect the cable to the USB I/O board.

Step 3. Install the top cover. See “Install the top cover” on page 337.

Step 4. Refer to “USB I/O board problems” on page 395 to troubleshoot USB problems.

After you finish

Complete the parts replacement. See “Complete the parts replacement” on page 341.

Demo video

Watch the procedure on YouTube

Complete the parts replacement

Go through the checklist to complete parts replacement.

To complete the parts replacement, do the following:

1. Ensure that all components have been reassembled correctly and that no tools or loose screws are left inside your server.
2. Properly route and secure the cables in the server. Refer to the cable connecting and routing information for each component in ***Internal Cable Routing Guide***.
3. Reinstall the top cover. See “Install the top cover” on page 337.
4. If the sever was installed in a rack, reinstall the server into the rack. See “Server replacement” on page 34.
5. Reconnect external cables and power cords to the server.

   Attention: To avoid component damage, connect the power cords last.
6. Power on the server and any peripheral devices. See “Power on the server” on page 27.
7. Update the server configuration if necessary.
   - Download and install the latest device drivers: http://datacentersupport.lenovo.com.
   - Update the system firmware. See “Update the firmware” in *User Guide* or *System Configuration Guide*.
   - Update the UEFI configuration. See https://pubs.lenovo.com/uefi-overview/.
   - Reconfigure the disk arrays if you have installed or removed a hot-swap drive or a RAID adapter. See https://pubs.lenovo.com/lxpm-overview/ for the LXPM documentation compatible with your server.

Chapter 2. Problem determination

Use the information in this section to isolate and resolve issues that you might encounter while using your server.

Lenovo servers can be configured to automatically notify Lenovo Support if certain events are generated. You can configure automatic notification, also known as Call Home, from management applications, such as the Lenovo XClarity Administrator. If you configure automatic problem notification, Lenovo Support is automatically alerted whenever a server encounters a potentially significant event.

To isolate a problem, you should typically begin with the event log of the application that is managing the server:

- If you are managing the server from the Lenovo XClarity Administrator, begin with the Lenovo XClarity Administrator event log.
- If you are using some other management application, begin with the Lenovo XClarity Controller event log.

Web resources

- **Tech tips**

  Lenovo continually updates the support website with the latest tips and techniques that you can use to solve issues that your server might encounter. These Tech Tips (also called retain tips or service bulletins) provide procedures to work around issues or solve problems related to the operation of your server.

  To find the Tech Tips available for your server:

  1. Go to http://datacentersupport.lenovo.com and navigate to the support page for your server.
  2. Click on **How To's** from the navigation pane.
  3. Click **Article Type → Solution** from the drop-down menu.

     Follow the on-screen instructions to choose the category for the problem that you are having.

- **Lenovo Data Center Forum**
  - Check https://forums.lenovo.com/t5/Datacenter-Systems/ct-p/sv_eg to see if someone else has encountered a similar problem.

Event logs

An *alert* is a message or other indication that signals an event or an impending event. Alerts are generated by the Lenovo XClarity Controller or by UEFI in the servers. These alerts are stored in the Lenovo XClarity Controller Event Log. If the server is managed by the Lenovo XClarity Controller or by the Lenovo XClarity Administrator, alerts are automatically forwarded to those management applications.

Note: For a listing of events, including user actions that might need to be performed to recover from an event, see the *Messages and Codes Reference*, which is available at https://pubs.lenovo.com/sr650-v4/pdf_files.

Lenovo XClarity Administrator event log

If you are using Lenovo XClarity Administrator to manage server, network, and storage hardware, you can view the events from all managed devices through the XClarity Administrator.

© Copyright Lenovo 2025

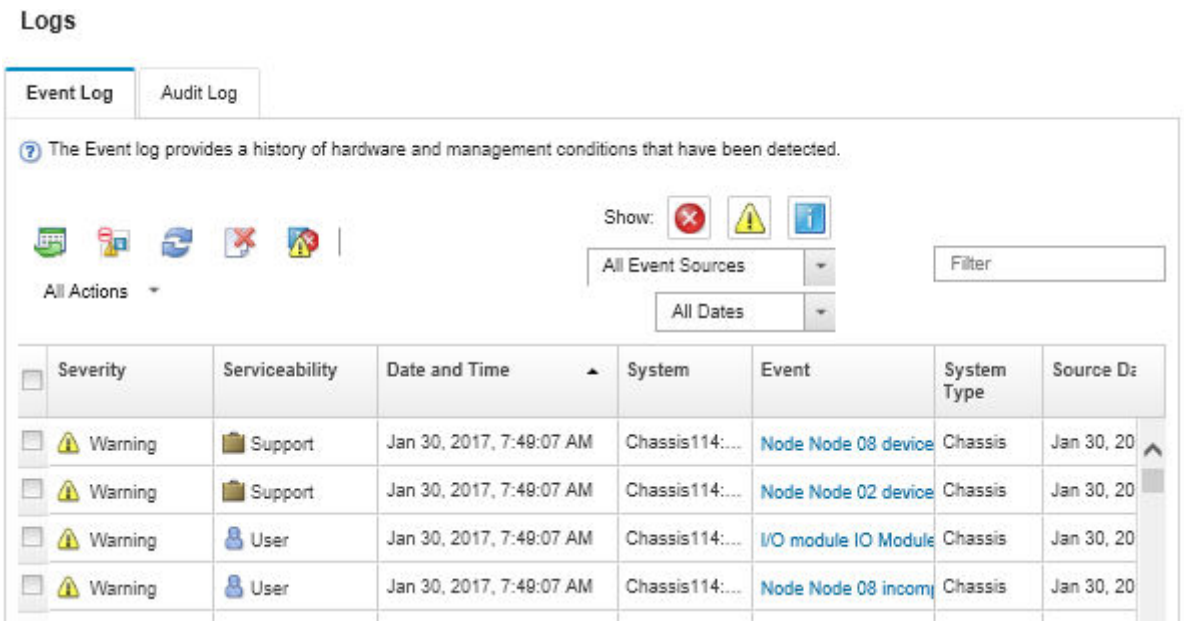

Figure 342. Lenovo XClarity Administrator event log

For more information about working with events from XClarity Administrator, see:

https://pubs.lenovo.com/lxca/events_vieweventlog

Lenovo XClarity Controller event log

The Lenovo XClarity Controller monitors the physical state of the server and its components using sensors that measure internal physical variables such as temperature, power-supply voltages, fan speeds, and component status. The Lenovo XClarity Controller provides various interfaces to systems management software and to system administrators and users to enable remote management and control of a server.

The Lenovo XClarity Controller monitors all components of the server and posts events in the Lenovo XClarity Controller event log.

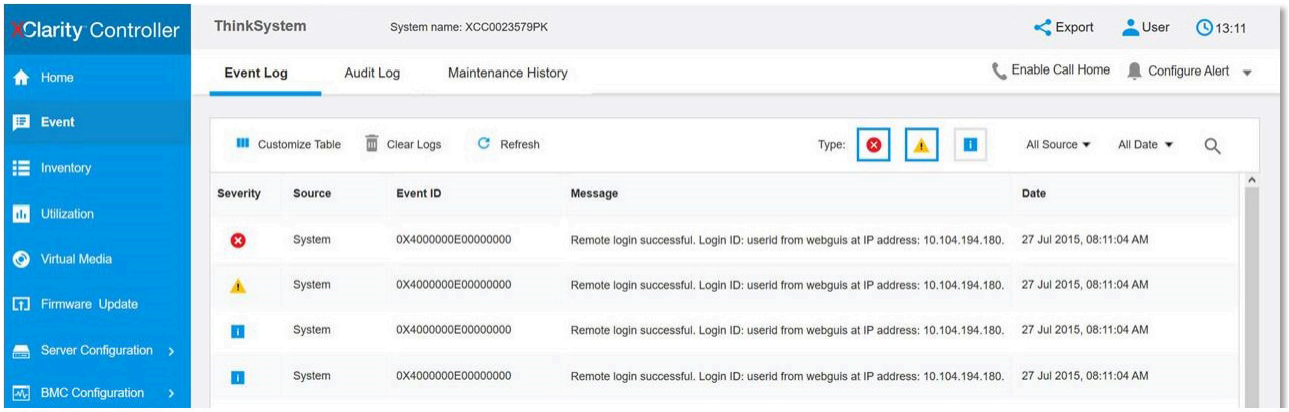

Figure 343. Lenovo XClarity Controller event log

For more information about accessing the Lenovo XClarity Controller event log, see:

“Viewing Event Logs” section in the XCC documentation compatible with your server at https://pubs.lenovo.com/lxcc-overview/

Specifications

Summary of the features and specifications of the server. Depending on the model, some features might not be available, or some specifications might not apply.

Refer to the below table for specifications categories and the content of each category.

Specification category	“Technical specifications” on page 345	“Mechanical specifications” on page 352	“Environmental specifications” on page 353
Content	• Processor • Memory • Internal drives • Expansion slots • RAID adapter • Host bus adapter (HBA)/ Expander • Graphics processing units (GPU) • Integrated functions and I/O connectors • Network • System fan • Power supplies • Operating systems • Minimal configuration for debugging	• Dimension • Weight	• Acoustical noise emissions • Environment • Water requirements • Particulate contamination

Technical specifications

Summary of the technical specifications of server. Depending on the model, some features might not be available, or some specifications might not apply for your server model.

Processor
Supports multi-core Intel Xeon processors, with integrated memory controller and Intel Mesh UPI (Ultra Path Interconnect) topology. • Up to two Intel Xeon 6 processors with P-cores (Granite Rapids-SP, GNR-SP) • Designed for the Land Grid Array (LGA) 4710 socket • Up to 86 cores per socket • Up to four UPI links at up to 24 GT/s • Thermal Design Power (TDP): up to 350 watts **Note:** For a list of supported processors, see https://serverproven.lenovo.com.

Memory

See “Memory module installation rules and order” on page 5 for detailed information about memory configuration and setup.

- Slots:
  - Servers without Compute Complex Neptune Core Module: 32 dual inline memory module (DIMM) connectors that support up to 32 TruDDR5 DIMMs
  - Servers with Compute Complex Neptune Core Module: 16 DIMM connectors that support up to 16 TruDDR5 DIMMs
- Memory module types:
  - TruDDR5 6400 MHz x8 RDIMM: 16 GB (1Rx8), 32 GB (2Rx8), 48 GB (2Rx8)
  - TruDDR5 6400 MHz 10x4 RDIMM: 32 GB (1Rx4), 64 GB (2Rx4), 96 GB (2Rx4), 128 GB (2Rx4)
  - TruDDR5 6400 MHz 3DS RDIMM: 256 GB (4Rx4)
  - TruDDR5 8800 MHz MRDIMM: 32 GB (2Rx8), 64 GB (2Rx4)
  - CXL memory module (CMM): 96 GB, 128 GB

  Notes:
  - MRDIMMs are supported only on servers equipped with processor 6747P, 6761P, 6767P, 6781P, or 6787P.
  - CXL memory modules are not supported with Windows Server and VMware ESXi. For specifics, see https://lenovopress.lenovo.com/osig#servers=sr650-v4-xeon-6-p-cores-7dgc-7dgd-7dk2&os_families=microsoft-windows-server&os_families=vmware-esxi&support=all.
- Speed: The operating speed depends on processor model and UEFI settings.
  - 6400 MHz RDIMMs
    - 1 DPC: 6400 MT/s
    - 2 DPC: 5200 MT/s
  - 8800 MHz MRDIMMs
    - 1 DPC: 8000 MT/s
- Capacity:
  - Servers without Compute Complex Neptune Core Module
    - Minimum: 16 GB
    - Maximum: 8 TB (32 x 256 GB 3DS RDIMMs)
  - Servers with Compute Complex Neptune Core Module
    - Minimum: 32 GB (2 x 16 GB RDIMMs)
    - Maximum: 4 TB (16 x 256 GB 3DS RDIMMs)

For a list of supported memory modules, see https://serverproven.lenovo.com.

Internal drives

Servers without Compute Complex Neptune Core Module:
- Front drive bays:
  - Up to 24 x 2.5-inch hot-swap SAS/SATA/NVMe drives
  - Up to 12 x 3.5-inch hot-swap SAS/SATA drives
  - Up to 4 x 3.5-inch hot-swap NVMe drives
  - Up to 32 x E3.S 1T hot-swap drives
- Middle drive bays:
  - Up to 8 x 2.5-inch hot-swap SAS/SATA or NVMe drives
- Rear drive bays:
  - Up to 8 x 2.5-inch hot-swap SAS/SATA drives
  - Up to 4 x 3.5-inch hot-swap SAS/SATA drives
  - Up to 4 x 2.5-inch hot-swap SAS/SATA/NVMe drives
- Up to two internal non-hot-swap or front/rear hot-swap M.2 drives

Servers with Compute Complex Neptune Core Module:
- Front drive bays:
  - Up to 16 x 2.5-inch hot-swap SAS/SATA/NVMe drives
  - Up to 16 x E3.S 1T hot-swap drives
- Up to two internal non-hot-swap or front/rear hot-swap M.2 drives

Expansion slots

Depending on the model, your server supports up to ten PCIe slots at the rear.

PCIe slot availability is based on riser selection and rear drive bay selection. See “Rear view” in *User Guide* or *System Configuration Guide* and “PCIe slots and PCIe adapters” on page 12.

RAID adapter

- Onboard NVMe ports with software RAID support (Intel VROC NVMe RAID)
  - Intel VROC Standard: requires an activation key and supports RAID levels 0, 1, and 10
  - Intel VROC Premium: requires an activation key and supports RAID levels 0, 1, 5, and 10
  - Intel VROC Boot: requires an activation key and supports RAID level 1 only

    Note: Intel VROC Boot only supports two drives corresponding to the same controller and the same processor.
- Hardware RAID levels 0, 1, 10:
  - ThinkSystem RAID 545-8i PCIe Gen4 12Gb Adapter
- Hardware RAID levels 0, 1, 5, 10:
  - ThinkSystem RAID 5350-8i PCIe 12Gb Adapter
- Hardware RAID levels 0, 1, 5, 6, 10, 50, 60:
  - ThinkSystem RAID 9350-8i 2GB Flash PCIe 12Gb Adapter
  - ThinkSystem RAID 9350-16i 4GB Flash PCIe 12Gb Adapter
  - ThinkSystem RAID 940-8i 4GB Flash PCIe Gen4 12Gb Adapter
  - ThinkSystem RAID 940-16i 8GB Flash PCIe Gen4 12Gb Adapter
  - ThinkSystem RAID 940-16i 8GB Flash PCIe Gen4 12Gb Internal Adapter*
  - ThinkSystem RAID 940-8e 4GB Flash PCIe Gen4 12Gb Adapter

Notes:
- *Custom form factor (CFF) adapters that are supported only for server models with 2.5-inch front drive bays.
- For more information about the RAID/HBA adapters, see Lenovo ThinkSystem RAID Adapter and HBA Reference.

Host bus adapter (HBA)/Expander

- ThinkSystem 4350-16i SAS/SATA 12Gb HBA
- ThinkSystem 440-16i SAS/SATA PCIe Gen4 12Gb HBA
- ThinkSystem 440-16i SAS/SATA PCIe Gen4 12Gb Internal HBA*
- ThinkSystem 440-16e SAS/SATA PCIe Gen4 12Gb HBA
- ThinkSystem 48 port 12Gb Internal Expander*

Notes:
- *Custom form factor (CFF) adapters that are supported only for server models with 2.5-inch front drive bays.
- For more information about the RAID/HBA adapters, see Lenovo ThinkSystem RAID Adapter and HBA Reference.

Graphics processing unit (GPU)

Your server supports the following GPUs:
- Double-wide: NVIDIA® L40S, RTX 4500 Ada, RTX 6000 Ada, H100 NVL
- Single-wide: RTX 4000 Ada, L4

Note:
For GPU supporting rules, see .

Integrated functions and I/O connectors

- Lenovo XClarity Controller (XCC), which provides service processor control and monitoring functions, video controller, and remote keyboard, video, mouse, and remote drive capabilities.
  - The server supports Lenovo XClarity Controller 3 (XCC3). For additional information about Lenovo XClarity Controller 3 (XCC3), refer to https://pubs.lenovo.com/lxcc-overview/.
  - One XCC system management port (10/100/1000 Mbps) on the rear to connect to a systems-management network. This RJ-45 connector is dedicated to the Lenovo XClarity Controller functions and runs at 10/100/1000 Mbps speed.
- Front connectors:
  - One Mini DisplayPort connector (optional)
  - One USB 3.2 Gen1 (5 Gbps) connector (optional)
  - One USB 3.2 Gen 1 (5Gbps) connector with USB 2.0 XCC system management (optional)
  - One external diagnostics connector
- Internal connector:
  - One internal USB 3.2 Gen1 (5 Gbps) connector
- Rear connectors:
  - One VGA connector
  - One USB 3.2 Gen1 (5 Gbps) connector
  - One USB 3.2 Gen 1 (5Gbps) connector with USB 2.0 XCC system management (depending on the configuration)
  - One XCC system management port (10/100/1000 Mbps)
  - Two or four Ethernet connectors on each OCP module (optional)
  - One serial port (optional)

Note: The maximum video resolution is 1920 x 1200 at 60 Hz.

Network

- OCP module
  - The server features two OCP slots at the rear.
  - The installation priority of OCP slots in configurations with two processors is as follows:
    - configurations with only one OCP module: A x8 OCP module is installed in OCP slot 1; a x16 OCP module is installed in OCP slot 2.
    - configurations with two OCP modules: OCP slot 1 > OCP slot 2; x8 > x16
  - Both OCP slots are of x8 lanes as default, which can be upgraded to x16 lanes by using OCP cables in some configurations. For the cable routing of OCP modules with x16 connection, see ***Internal Cable Routing Guide***.

System fan

- Supported fan types:
  - Standard fan (60 x 60 x 38 mm, single-rotor, 24000 RPM)
  - Performance fan (60 x 60 x 56 mm, dual-rotor, 20000 RPM)
  - Ultra fan (60 x 60 x 56 mm, dual-rotor, 21000 RPM)
- Fan redundancy: N+1 redundancy, one redundant fan rotor
  - One processor: five hot-swap system fans
  - Two processors or middle/rear drive bays: six hot-swap system fans

Notes:

- Single-rotor hot-swap fans cannot be mixed with dual-rotor hot-swap fans.
- The redundant cooling by the fans in the server enables continued operation if one rotor of a fan fails.

Electrical input and power policy

Electrical input for power supply units

Common Redundant Power Supply (CRPS) and CRPS Premium are supported as listed below:

CAUTION:
- **240 V dc input is supported in Chinese Mainland ONLY.**
- **Power supply with 240 V dc input cannot support hot plugging power cord function. Before removing the power supply with dc input, please turn off server or disconnect dc power sources at the breaker panel or by turning off the power source. Then, remove the power cord.**
- **CRPS power supplies in the chassis must have the same wattage, vendor, and part number (or alternate part number).**

Power supply	100–127 V ac	200–240 V ac	240 V dc	-48 V dc	HVDC 240–380 V dc	HVAC 200–277 V ac	CRPS	CRPS Premium
800-watt 80 PLUS Platinum	√	√	√				√	
1300-watt 80 PLUS Platinum	√	√	√				√	
1300-watt -48 V dc				√				√
1300-watt HVAC/ HVDC 80 PLUS Platinum					√	√		√
2700-watt 80 PLUS Platinum		√	√				√	
800-watt 80 PLUS Titanium	√	√	√				√	√
1300-watt 80 PLUS Titanium	√	√	√				√	√
2000-watt 80 PLUS Titanium		√	√					√
2700-watt 80 PLUS Titanium		√	√					√
3200-watt 80 PLUS Titanium		√	√					√

Electrical input and power policy

Power policy for power supply units

Following is one or two power supply units for redundancy or over-subscription (OVS) support:

Notes:
- Only CRPS Premium PSUs support OVS, Zero Output Mode, and Virtual-Reseat (VR).
- The following Lenovo XClarity Controller options are supported only when CRPS Premium PSUs are installed:
  - Power Redundant options such as **Zero Output Mode** and **Non-redundant**.
  - **AC Power Cycle Server** option under **Power Action**.
- Mixing of CRPS PSUs from different vendors are not supported.
- 1+0 indicates that the server has only one power supply unit installed and the system does not support power redundancy, while 1+1 indicates that two power supply units are installed and redundancy is supported.

Type	Watts	Redundancy		OVS
CRPS Premium	800-watt 80 PLUS Titanium	1+0	×	×
		1+1	√	√
	1300-watt 80 PLUS Titanium	1+0	×	×
		1+1	√	√
	1300-watt -48 V dc	1+1	√	√
	1300-watt HVAC/HVDC 80 PLUS Platinum	1+1	√	√
	2000-watt 80 PLUS Titanium	1+1	√	√
	2700-watt 80 PLUS Titanium	1+1	√	√
	3200-watt 80 PLUS Titanium	1+1	√	√
CRPS	800-watt 80 PLUS Platinum	1+1	√	×
	800-watt 80 PLUS Titanium	1+1	√	×
	1300-watt 80 PLUS Platinum	1+1	√	×
	1300-watt 80 PLUS Titanium	1+1	√	×
	2700-watt 80 PLUS Platinum	1+1	√	×

Operating systems

Supported and certified operating systems:
- Microsoft Windows Server
- Red Hat Enterprise Linux
- SUSE Linux Enterprise Server
- VMware ESXi
- Canonical Ubuntu

References:
- Complete list of available operating systems: https://lenovopress.com/osig.
- OS deployment instructions: see “Deploy the operating system” in *User Guide* or *System Configuration Guide*.

Minimal configuration for debugging

• Servers without Compute Complex Neptune Core Module
  – One processor in socket 1
  – One memory module in slot 7
  – One power supply unit
  – One HDD/SSD drive, one M.2 drive (if OS is needed for debugging)
  – Five system fans
• Servers with Compute Complex Neptune Core Module
  – Two processors
  – Two memory modules in slot 7 and slot 23
  – One power supply unit
  – One HDD/SSD drive, one M.2 drive (if OS is needed for debugging)
  – Six system fans

Mechanical specifications

Summary of the mechanical specifications of server. Depending on the model, some features might not be available, or some specifications might not apply.

Dimension

• Form factor: 2U
• Height: 87 mm (3.4 inches)
• Width:
  – With rack latches: 482 mm (19.0 inches)
  – Without rack latches: 445 mm (17.5 inches)
• Depth: 796 mm (31.3 inches)
 	
Note: The depth is measured with rack latches installed, but without the security bezel installed.

Weight
Up to 38.8 kg (85.5 lb), depending on the server configuration

Environmental specifications

Summary of the environmental specifications of server. Depending on the model, some features might not be available, or some specifications might not apply.

Attention: Environment quality must be maintained over the lifetime of the system to receive warranty and support on affecting components. For water quality requirement, see Lenovo Neptune Direct Water-Cooling Standards.

- "Acoustical noise emissions" on page 353
- "Environment" on page 354
- "Water requirements" on page 355

Acoustical noise emissions

Acoustical noise emissions

The server has the following acoustic noise emissions declaration.

Table 19. Acoustic noise emissions declaration

Acoustic performance @ 25°C ambient	Configuration	Min	Typical	Storage	GPU rich
Declared mean A-weighted sound power level, $L_{WA,m}$ (B) Statistical adder for verification, Kv (B) = 0.4	Idle mode	5.6	5.9	6.8	6.8
	Operating mode 1	5.9	6.2	6.8	7.3
	Operating mode 2	6.4	6.7	8.4	8.7
Declared mean A-weighted emission sound pressure level, $L_{pA,m}$ (dB) Bystander position	Idle mode	44	47	56	56
	Operating mode 1	47	50	56	62
	Operating mode 2	52	54	71	75

Notes:

- These sound levels were measured in controlled acoustical environments according to procedures specified by ISO7779 and are reported in accordance with ISO 9296.
- Idle mode is the steady state in which the server is powered on but not operating any intended function. Operating mode 1 is the maximum acoustic output of 50% CPU TDP or active storage drives. Operating mode 2 is the maximum acoustical output of 100% CPU TDP or GPU TDP.
- The declared acoustic sound levels are based on the following configurations, which may change depending on configuration or conditions.
  - **Min**: 2 x 250 W CPUs, 8 x 64 GB RDIMMs, 8 x 2.5" SAS HDDs, 1 x RAID 940-8i, 1 x ThinkSystem Broadcom 5719 1GbE RJ45 4-port OCP Ethernet Adapter, 2 x 1300 W PSUs
  - **Typical**: 2 x 270 W CPUs, 16 x 64 GB RDIMMs, 16 x 2.5" SAS HDDs, 1 x RAID 940-16i, 2 x ThinkSystem Broadcom 57414 10/25GbE SFP28 2-port OCP Ethernet Adapter, 2 x 1300W PSUs
  - **GPU rich**: 2 x 350 W CPUs, 2 x H100 NVL GPUs, 16 x 64 GB RDIMMs, 8 x 2.5" NVMe drives, 2 x ThinkSystem Broadcom 57508 100GbE QSFP56 2-Port OCP Ethernet Adapter, 2 x 2700W PSUs
  - **Storage rich**: 2 x 270 W CPUs, 16 x 64 GB RDIMMs, 16 x 3.5" SAS HDDs, 1 x RAID 940-16i, 2 x ThinkSystem Broadcom 57414 10/25GbE SFP28 2-port OCP Ethernet Adapter, 2 x 1300 W PSUs
- Government regulations (such as those prescribed by OSHA or European Community Directives) may govern noise level exposure in the workplace and may apply to you and your server installation. The actual sound pressure levels in your installation depend upon a variety of factors, including the number of racks in the installation; the size, materials, and configuration of the room; the noise levels from other equipment; the room ambient temperature, and employee's location in relation to the equipment. Further, compliance with such government regulations depends on a variety of additional factors, including the duration of employees' exposure and whether employees wear hearing protection. Lenovo recommends that you consult with qualified experts in this field to determine whether you are in compliance with the applicable regulations.

Environment

Environment
ThinkSystem SR650 V4 complies with ASHRAE Class A2 specifications with most configurations, and depending on the hardware configuration, also complies with ASHRAE Class A3 and Class A4 specifications. System performance may be impacted when the operating temperature is outside ASHRAE A2 specification. Depending on the hardware configuration, SR650 V4 server also complies with ASHRAE Class H1 specification. System performance may be impacted when the operating temperature is outside ASHRAE H1 specification. For detailed thermal information, see “Thermal rules” on page 17. **Note:** When the ambient temperature is greater than the supported max temperature (ASHRAE A4 45°C), the server will shut down. The server will not power on again until the ambient temperature falls within the supported temperature range. The restrictions to ASHRAE support are as follows (cooling by air): • The ambient temperature must be no more than 35°C in any of the following configurations: – standard configurations with ≥ 64 GB DIMMs or > 205 W processors – storage configurations without middle or rear drive bays – GPU configurations – configurations with special parts listed in “Thermal rules” on page 17 • The ambient temperature must be no more than 30°C in any of the following configurations: – storage configurations with middle or rear drive bays – storage or GPU configurations with MRDIMMs or 256 GB 3DS RDIMMs – configurations with special parts listed in “Thermal rules” on page 17 • The ambient temperature must be no more than 25°C in any of the following configurations: – storage configurations with ThinkSystem NVIDIA BlueField-3 VPI QSFP112 2P 200G PCIe Gen5 x16 B3220 – storage configurations with a ConnectX-8 adapter used with ThinkSystem NDR/NDR200 QSFP112 IB Multi Mode Solo-Transceiver – GPU configurations with 16 x 2.5" AnyBay front drive bays and ThinkSystem NVIDIA BlueField-3 VPI QSFP112 2P 200G PCIe Gen5 x16 B3220 – GPU configurations with 24 x 2.5" AnyBay front drive bays and a ConnectX-8 adapter used with ThinkSystem NDR/NDR200 QSFP112 IB Multi Mode Solo-Transceiver – configurations with special parts listed in “Thermal rules” on page 17 The restrictions to ASHRAE support are as follows (cooling by Processor Neptune Core Module): • The ambient temperature must be no more than 30°C in any of the following configurations: – 36 NVMe configurations with standard fans – standard configurations with standard fans and MRDIMMs or 256 GB 3DS RDIMMs – GPU configurations with MRDIMMs or 256 GB 3DS RDIMMs – standard configurations with ThinkSystem NVIDIA BlueField-3 VPI QSFP112 2P 200G PCIe Gen5 x16 B3220 – storage configurations with ConnectX-8 adapter • The ambient temperature must be no more than 25°C in any of the following configurations: – storage configurations with 12 x 3.5" front drive bays, standard fans, and MRDIMMs or 256 GB 3DS RDIMMs – storage configurations with ThinkSystem NVIDIA BlueField-3 VPI QSFP112 2P 200G PCIe Gen5 x16 B3220 The restrictions to ASHRAE support are as follows (cooling by Compute Complex Neptune Core Module): • The ambient temperature must be no more than 35°C in the following configurations: – configurations with special parts listed in “Thermal rules” on page 17 • The ambient temperature must be no more than 30°C in the following configurations: – configurations with ThinkSystem NVIDIA BlueField-3 VPI QSFP112 2P 200G PCIe Gen5 x16 B3220 • **Air temperature**: – Operating: – ASHRAE class H1: 5°C to 25°C (41°F to 77°F) The maximum ambient temperature decreases by 1°C for every 500 m (1640 ft) increase in altitude above 900 m (2,953 ft) – ASHRAE class A2: 10°C to 35°C (50°F to 95°F)

Environment

The maximum ambient temperature decreases by 1°C for every 300 m (984 ft) increase in altitude above 900 m (2,953 ft)
  - ASHRAE class A3: 5°C to 40°C (41°F to 104°F)

    The maximum ambient temperature decreases by 1°C for every 175 m (574 ft) increase in altitude above 900 m (2,953 ft)
  - ASHRAE class A4: 5°C to 45°C (41°F to 113°F)

    The maximum ambient temperature decreases by 1°C for every 125 m (410 ft) increase in altitude above 900 m (2,953 ft)
- Server off: -10°C to 60°C (14°F to 140°F)
- Shipment/storage: -40°C to 70°C (-40°F to 158°F)

- **Maximum altitude**: 3,050 m (10,000 ft)
- **Relative Humidity** (non-condensing):
  - Operating
    - ASHRAE class H1: 8%–80%; maximum dew point: 17°C (62.6°F)
    - ASHRAE class A2: 20%–80%; maximum dew point: 21°C (70°F)
    - ASHRAE class A3: 8%–85%; maximum dew point: 24°C (75°F)
    - ASHRAE class A4: 8%–90%; maximum dew point: 24°C (75°F)
  - Shipment/storage: 8% to 90%

Water requirements

Water requirements

ThinkSystem SR650 V4 is supported in the following environment:

- Maximum pressure: 3 bars
- Water inlet temperature and flow rates:
  - For servers with Compute Complex Neptune Core Module, the water inlet temperature is 45°C (113°F), and the water flow rate is 1 lpm per server.
  - For servers with Processor Neptune Core Module, the water inlet temperature and water flow rate can be as follows:

Water inlet temperature	Water flow rate
50°C (122°F)	**1.5** liters per minute (lpm) per server
45°C (113°F)	**1** liter per minute (lpm) per server
40°C (104°F) or lower	**0.5** liters per minute (lpm) per server

Attention: The water required to initially fill the system side cooling loop must be reasonably clean, bacteria-free water (<100 CFU/ml) such as de-mineralized water, reverse osmosis water, de-ionized water, or distilled water. The water must be filtered with an in-line 50 micron filter (approximately 288 mesh). The water must be treated with anti-biological and anti-corrosion measures. Environment quality must be maintained over the lifetime of the system to receive warranty and support on affecting components. For more information, see Lenovo Neptune Direct Water-Cooling Standards.

Particulate contamination

Attention: Airborne particulates (including metal flakes or particles) and reactive gases acting alone or in combination with other environmental factors such as humidity or temperature might pose a risk to the device that is described in this document.

Attention: Environment quality must be maintained over the lifetime of the system to receive warranty and support on affecting components. For water quality requirement, see Lenovo Neptune Direct Water-Cooling Standards.

Risks that are posed by the presence of excessive particulate levels or concentrations of harmful gases include damage that might cause the device to malfunction or cease functioning altogether. This specification sets forth limits for particulates and gases that are intended to avoid such damage. The limits must not be viewed or used as definitive limits, because numerous other factors, such as temperature or moisture content of the air, can influence the impact of particulates or environmental corrosives and gaseous contaminant transfer. In the absence of specific limits that are set forth in this document, you must implement practices that maintain particulate and gas levels that are consistent with the protection of human health and safety. If Lenovo determines that the levels of particulates or gases in your environment have caused damage to the device, Lenovo may condition provision of repair or replacement of devices or parts on implementation of appropriate remedial measures to mitigate such environmental contamination. Implementation of such remedial measures is a customer responsibility.

Table 20. Limits for particulates and gases

Contaminant	Limits
Reactive gases	Severity level G1 as per ANSI/ISA 71.04-1985[1]: • The copper reactivity level shall be less than 200 Angstroms per month (Å/month ≈ 0.0035 μg/cm^2-hour weight gain).[2] • The silver reactivity level shall be less than 200 Angstroms per month (Å/month ≈ 0.0035 μg/cm^2-hour weight gain).[3] • The reactive monitoring of gaseous corrosivity must be conducted approximately 5 cm (2 in.) in front of the rack on the air inlet side at one-quarter and three-quarter frame height off the floor or where the air velocity is much higher.
Airborne particulates	Data centers must meet the cleanliness level of ISO 14644-1 class 8. For data centers without airside economizer, the ISO 14644-1 class 8 cleanliness might be met by choosing one of the following filtration methods: • The room air might be continuously filtered with MERV 8 filters. • Air entering a data center might be filtered with MERV 11 or preferably MERV 13 filters. For data centers with airside economizers, the choice of filters to achieve ISO class 8 cleanliness depends on the specific conditions present at that data center. • The deliquescent relative humidity of the particulate contamination should be more than 60% RH.[4] • Data centers must be free of zinc whiskers.[5]

[1] ANSI/ISA-71.04-1985. *Environmental conditions for process measurement and control systems: Airborne contaminants*. Instrument Society of America, Research Triangle Park, North Carolina, U.S.A.

[2] The derivation of the equivalence between the rate of copper corrosion growth in the thickness of the corrosion product in Å/month and the rate of weight gain assumes that Cu_2S and Cu_2O grow in equal proportions.

[3] The derivation of the equivalence between the rate of silver corrosion growth in the thickness of the corrosion product in Å/month and the rate of weight gain assumes that Ag_2S is the only corrosion product.

[4] The deliquescent relative humidity of particulate contamination is the relative humidity at which the dust absorbs enough water to become wet and promote ionic conduction.

[5] Surface debris is randomly collected from 10 areas of the data center on a 1.5 cm diameter disk of sticky electrically conductive tape on a metal stub. If examination of the sticky tape in a scanning electron microscope reveals no zinc whiskers, the data center is considered free of zinc whiskers.

Troubleshooting by system LEDs and diagnostics display

See the following section for information on available system LEDs and diagnostics display.

Drive LEDs

This topic provides information on drive LEDs.

Each drive comes with an activity LED and a status LED. Different colors and speeds indicate different activities or status of the drive. The following illustrations and tables describe the problems that are indicated by the activity LED and the status LED.

LEDs on hard disk drives or solid-state drives

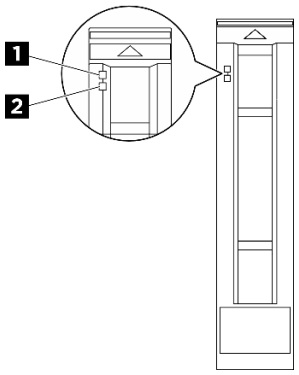

Figure 344. 2.5-inch/3.5-inch drive LEDs

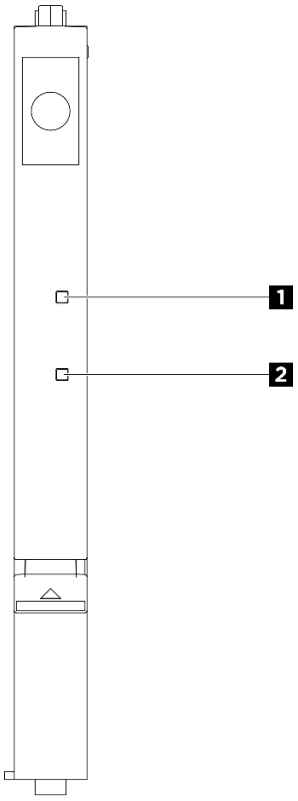

Figure 345. E3.S drive LEDs

Drive LED	Status	Description
1 Drive activity LED	Solid green	The drive is powered but not active.
	Blinking green	The drive is active.
2 Drive status LED	Solid yellow	The drive has an error.
	Blinking yellow (blinking slowly, about one flash per second)	The drive is being rebuilt.
	Blinking yellow (blinking rapidly, about four flashes per second)	The drive is being identified.

E3.S CMM LEDs

This topic provides information on LEDs of E3.S Compute Express Link (CXL) memory (CMM).

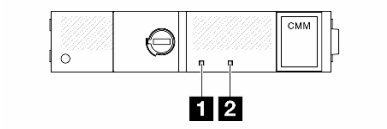

Figure 346. E3.S CMM LEDs

LED	Status	Description
1 Fault LED (amber)	Off	The CMM is healthy.
	On	The CMM is faulty.
2 Health LED (white)	On	The CMM is powered but not active. Removal is not permitted.
	Blinking	The CMM is active. Removal is not permitted.
	Off	The CMM is not powered. Removal is permitted.

External diagnostics handset

The external diagnostics handset is an external device that can be connected to the server with a cable, and it allows quick access to system information such as errors, system status, firmware, network, and health information.

Note: The external diagnostics handset is an optional part that needs to be purchased separately.

- "Location of the External Diagnostics Handset" on page 359
- "Diagnostics panel overview" on page 360
- "Options flow diagram" on page 360
- "Full menu list" on page 362

Location of the external diagnostics handset

Location	Description
The external diagnostics handset is connected to the server with an external cable. 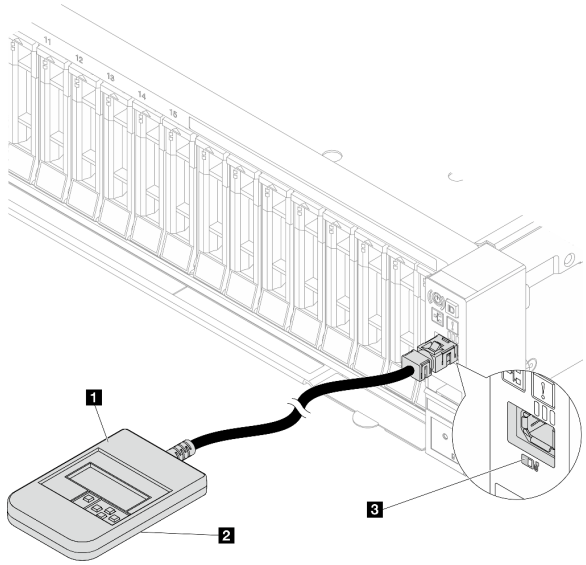 	1 External diagnostics handset
	2 Magnetic bottom With this component, the diagnostic handset can be attached to the top or side of the rack with hands spared for service tasks.
	3 External diagnostics connector This connector is located on the front of the server and is used to connect an external diagnostics handset.

Note: When unplugging the external diagnostics handset, see the following instructions:

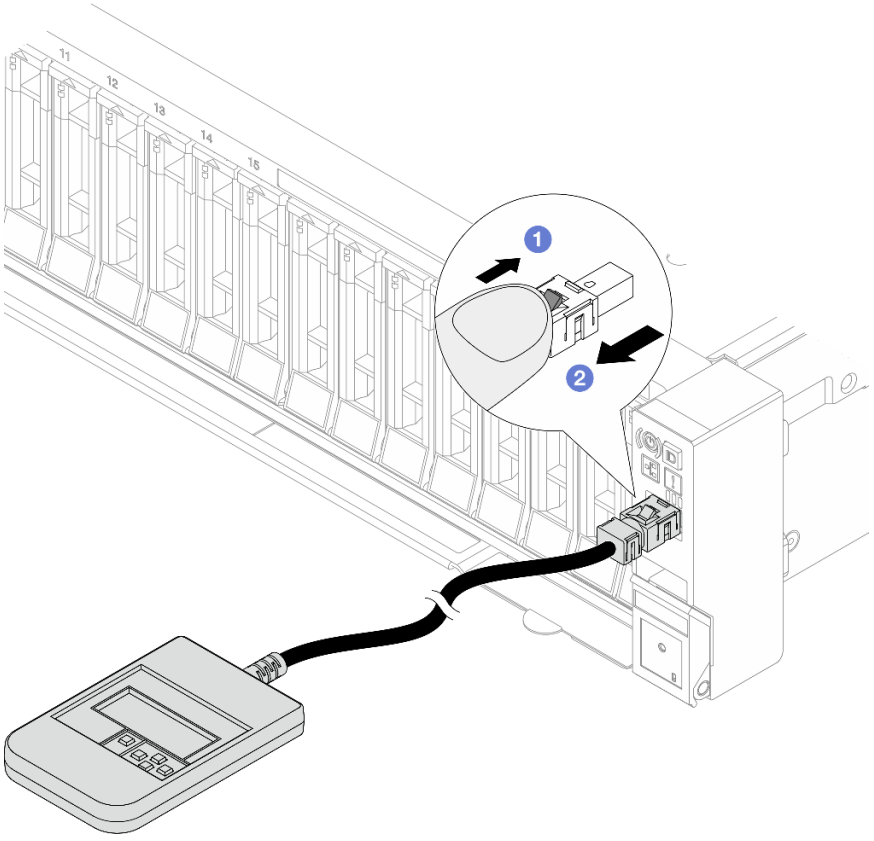

1. Press the plastic clip on the plug forward.
2. Hold the clip and remove the cable from the connector.

Display panel overview

The diagnostics device consists of an LCD display and 5 navigation buttons.

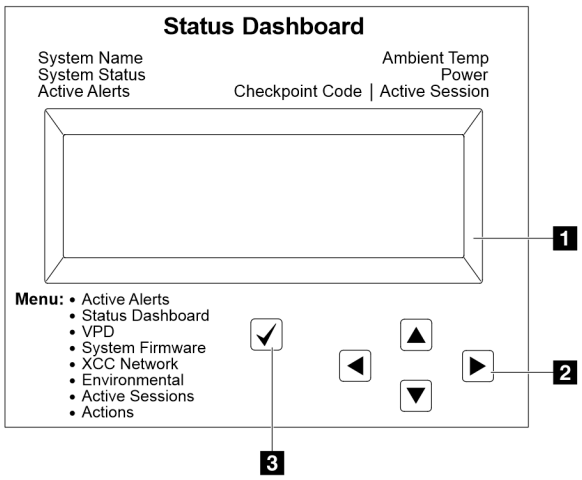

1 LCD display	
2 Scroll buttons (up/down/left/right) Press the scroll buttons to locate and select system information.	
3 Select button Press the select button to select from the options in the menu.	

Option flow diagram

Note: SR650 V4 does not support the following functions: Request Virtual Reseat, Modify XCC Static IPv4 Address, Modify System Name, and Generate/Download FFDC Service Data.

The external diagnostics handset displays various system information. Navigate through the options with the scroll keys.

Depending on the model, the options and entries on the LCD display might be different.

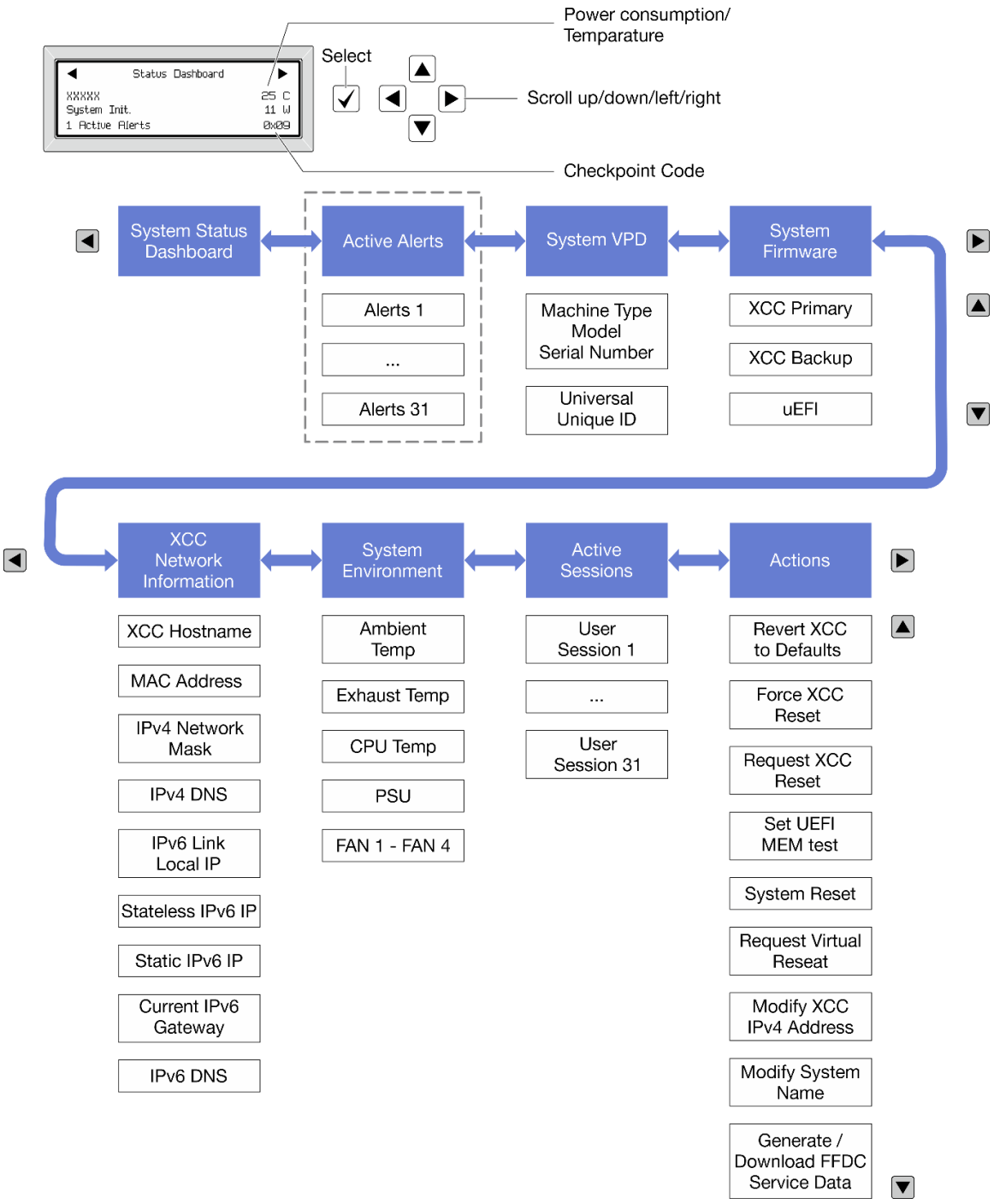
Power consumption/
Temparature
Select
Status Dashboard
XXXXX
25 C
System Init.
11 W
1 Active Alerts
0x09
Scroll up/down/left/right
Checkpoint Code
System Status Dashboard
Active Alerts
System VPD
System Firmware
Alerts 1
...
Alerts 31
Machine Type Model Serial Number
Universal Unique ID
XCC Primary
XCC Backup
uEFI
XCC Network Information
System Environment
Active Sessions
Actions
XCC Hostname
MAC Address
IPv4 Network Mask
IPv4 DNS
IPv6 Link Local IP
Stateless IPv6 IP
Static IPv6 IP
Current IPv6 Gateway
IPv6 DNS
Ambient Temp
Exhaust Temp
CPU Temp
PSU
FAN 1 - FAN 4
User Session 1
...
User Session 31
Revert XCC to Defaults
Force XCC Reset
Request XCC Reset
Set UEFI MEM test
System Reset
Request Virtual Reseat
Modify XCC IPv4 Address
Modify System Name
Generate / Download FFDC Service Data

Full menu list

Following is the list of available options. Switch between an option and the subordinate information entries with the select button, and switch among options or information entries with the scroll buttons.

Depending on the model, the options and entries on the LCD display might be different.

Home Menu (System Status Dashboard)

Home Menu	Example
1 System name 2 System status 3 Active alert quantity 4 Temperature 5 Power consumption 6 Checkpoint code	

Active Alerts

Sub Menu	Example
Home screen: Active error quantity **Note:** The “Active Alerts” menu displays only the quantity of active errors. If no errors occur, the “Active Alerts” menu will not be available during navigation.	1 Active Alerts
Details screen: • Error message ID (Type: Error/Warning/Information) • Occurrence time • Possible sources of the error	Active Alerts: 1 Press ▼ to view alert details FQXSPPU009N(Error) 04/07/2020 02:37:39 PM CPU 1 Status: Configuration Error

System VPD Information

Sub Menu	Example
• Machine type and serial number • Universal Unique ID (UUID)	Machine Type: xxxx Serial Num: xxxxxx Universal Unique ID: xxxxxxxxxxxxxxxxxxxxxxxxxxxx

System Firmware

Sub Menu	Example
XCC Primary • Firmware level (status) • Build ID • Version number • Release date	XCC Primary (Active) Build: DVI399T Version: 4.07 Date: 2020-04-07
XCC Backup • Firmware level (status) • Build ID • Version number • Release date	XCC Backup (Active) Build: D8BT05I Version: 1.00 Date: 2019-12-30
UEFI • Firmware level (status) • Build ID • Version number • Release date	UEFI (Inactive) Build: D0E101P Version: 1.00 Date: 2019-12-26

XCC Network Information

Sub Menu	Example
• XCC hostname • MAC address • IPv4 Network Mask • IPv4 DNS • IPv6 Link Local IP • Stateless IPv6 IP • Static IPv6 IP • Current IPv6 Gateway • IPv6 DNS **Note:** Only the MAC address that is currently in use is displayed (extension or shared).	XCC Network Information XCC Hostname: XCC-xxxx-SN MAC Address: xx:xx:xx:xx:xx:xx IPv4 IP: xx.xx.xx.xx IPv4 Network Mask: x.x.x.x IPv4 Default Gateway: x.x.x.x

System Environmental Information

Sub Menu	Example
• Ambient temperature • Exhaust temperature • CPU temperature • PSU status • Spinning speed of fans by RPM	Ambient Temp: 24 C Exhaust Temp: 30 C CPU1 Temp: 50 C PSU1: Vin= 213 w Inlet= 26 C FAN1 Front: 21000 RPM FAN2 Front: 21000 RPM FAN3 Front: 21000 RPM FAN4 Front: 21000 RPM

Active Sessions

Sub Menu	Example
Quantity of active sessions	Active User Sessions: 1

Actions

Sub Menu	Example
Several quick actions are available: • Revert XCC to Defaults • Force XCC Reset • Request XCC Reset • Set UEFI Memory Test • Request Virtual Reseat • Modify XCC Static IPv4 Address/Net mask/Gateway • Modify System Name • Generate/Download FFDC Service Data	Request XCC Reset? This will request the BMC to reboot itself. Hold √ for 3 seconds

Front-operator-panel LEDs and buttons

The front operator panel of the server provides controls, connectors, and LEDs.

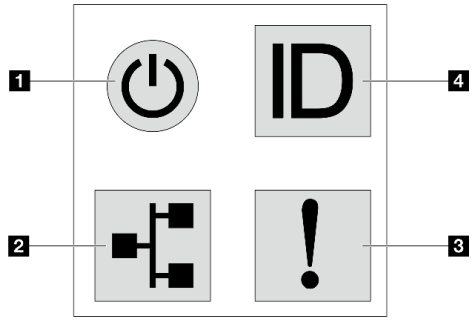

Figure 347. Diagnostics panel

1 Power button with power status LED

You can press the power button to power on the server when you finish setting up the server. You also can hold the power button for several seconds to power off the server if you cannot shut down the server from the operating system. The power status LED helps you determine the current power status.

Status	Color	Description
Solid on	Green	The server is on and running.
Slow blinking (about one flash per second)	Green	The server is off and is ready to be powered on (standby state).
Fast blinking (about four flashes per second)	Green	• The server is off, but the XClarity Controller is initializing, and the server is not ready to be powered on. • System-board-assembly power has failed.
Off	None	There is no ac power applied to the server.

2 Network activity LED

Compatibility of the NIC adapter and the network activity LED

NIC adapter	Network activity LED
OCP module	Support
PCIe NIC adapter	Not support

When an OCP module is installed, the network activity LED on the front I/O assembly helps you identify the network connectivity and activity. If no OCP module is installed, this LED is off.

Status	Color	Description
On	Green	The server is connected to a network.
Blinking	Green	The network is connected and active.
Off	None	The server is disconnected from the network. **Note:** If the network activity LED is off when an OCP module is installed, check the network ports in the rear of your server to determine which port is disconnected.

3 System error LED

The system error LED helps you to determine if there are any system errors.

Status	Color	Description	Action
On	Amber	An error has been detected on the server. Causes might include but are not limited to the following errors: • The temperature of the server reached the non-critical temperature threshold. • The voltage of the server reached the non-critical voltage threshold. • A fan has been detected to be running at low speed. • A hot-swap fan has been removed. • The power supply has a critical error. • The power supply is not connected to the power. • A processor error. • A system I/O board or processor board error. • Abnormal status is detected on the Compute Complex Neptune Core Module or Processor Neptune Core Module.	• Check the Lenovo XClarity Controller event log and the system event log to determine the exact cause of the error. • Check if additional LEDs in the server are lit. It will direct you to the error source. See "Troubleshooting by system LEDs and diagnostics display" on page 356. • Save the log if necessary. **Note:** For server models with Compute Complex Neptune Core Module or Processor Neptune Core Module installed, it is required to open the top cover to check the LED status of the leakage detection sensor module. For more instructions, see "LED on the leakage detection sensor module" on page 366.
Off	None	The server is off or the server is on and is working correctly.	None.

4 System ID button with system ID LED

Use this system ID button and the blue system ID LED to visually locate the server. A system ID LED is also located on the rear of the server. Each time you press the system ID button, the state of both the system ID LEDs changes. The LEDs can be changed to on, blinking, or off. You can also use the Lenovo XClarity Controller or a remote management program to change the state of the system ID LEDs to assist in visually locating the server among other servers.

If the XClarity Controller USB connector is set to have both the USB 2.0 function and XClarity Controller management function, you can press the system ID button for three seconds to switch between the two functions.

LED on the leakage detection sensor module

This topic provides information about the LED on the leakage detection sensor module.

The leakage detection sensor module on the Compute Complex Neptune Core Module or Processor Neptune Core Module comes with one LED. The following illustration shows the LED on the module.

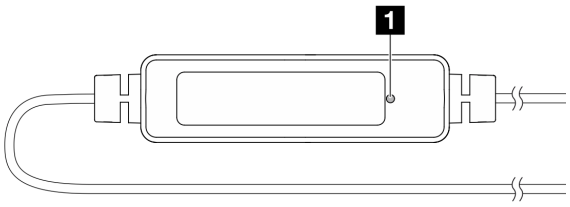

Figure 348. Leakage detection sensor LED

The following table describes the status that are indicated by the LED on the leakage detection sensor module.

1 Leakage detection sensor LED (green)	
Description	• On: No liquid leakage or cable break alert. • Slow blinking (about two flashes per second): Cable break alert. • Fast blinking (about five flashes per second): Liquid leak alert.
Action	• If the cable breaks, replace the Processor Neptune Core Module or Compute Complex Neptune Core Module (trained technicians only). • If liquid leakage happens, see or .

LEDs on the XCC system management port

This topic provides information on LEDs of XCC system management port (10/100/1000 Mbps).

The following table describes the problems that are indicated by LEDs on XCC system management port (10/100/1000 Mbps).

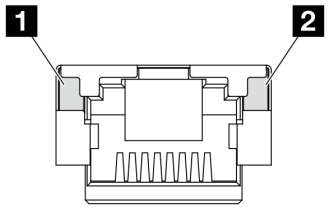

Figure 349. LEDs on the XCC system management port (10/100/1000 Mbps)

LED	Description
1 XCC system management port (10/100/1000 Mbps) (1 GB RJ-45) Ethernet port link LED	Use this green LED to distinguish the network connectivity status: • Off: The network link is disconnected. • Green: The network link is established.
2 XCC system management port (10/100/1000 Mbps) (1 GB RJ-45) Ethernet port activity LED	Use this green LED to distinguish the network activity status: • Off: The server is disconnected from a LAN. • Green: The network is connected and active.

Power-supply-unit LEDs

This topic provides information about various power supply unit LED status and corresponding action suggestions.

The following minimal configuration is required for the server to start:
- Servers without Compute Complex Neptune Core Module
  - One processor in socket 1
  - One memory module in slot 7

  - One power supply unit
  - One HDD/SSD drive, one M.2 drive (if OS is needed for debugging)
  - Five system fans
- Servers with Compute Complex Neptune Core Module
  - Two processors
  - Two memory modules in slot 7 and slot 23
  - One power supply unit
  - One HDD/SSD drive, one M.2 drive (if OS is needed for debugging)
  - Six system fans

The following table describes the problems that are indicated by various combinations of the power-supply unit LEDs and the power-on LED and suggested actions to correct the detected problems.

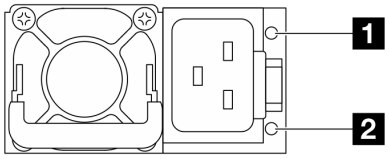

Figure 350. LEDs on a CRPS Premium *power supply unit*

LED	Description
1 Output and fault status (bi-color, green and yellow)	The output and fault status LED can be in one of the following states: • Off: The server is powered off, or the power supply unit is not working properly. If the server is powered on but the LED is off, replace the power supply unit. • Slow blinking green (about one flash per second): The power supply is in zero-output mode (standby). When the server power load is low, one of the installed power supplies enters into the standby state while the other one delivers entire load. When the power load increases, the standby power supply will switch to active state to provide sufficient power to the server. • Fast blinking green (about five flashes per second): The power supply unit is in firmware update mode. • Green: The server is on and the power supply unit is working normally. • Yellow: The power supply unit may have failed. Dump the FFDC log from the system and contact Lenovo back-end support team for PSU data log reviewing. Zero-output mode can be disabled via Setup Utility or Lenovo XClarity Controller web interface. If you disable zero-output mode, both power supplies will be in the active state. • Start the Setup utility, go to **System Settings → Power → Zero Output** and select **Disable**. If you disable zero-output mode, both power supplies will be in the active state. • Log in to the Lenovo XClarity Controller web interface, choose **Server Configuration → Power Policy**, disable **Zero Output Mode**, and then click **Apply**.
2 Input status (single color, green)	The input status LED can be in one of the following states: • Off: The power supply unit is disconnected from the input power source. • Green: The power supply unit is connected to the input power source.

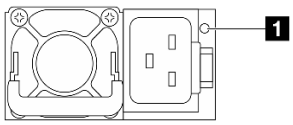

Figure 351. LED on a CRPS PSU (1)

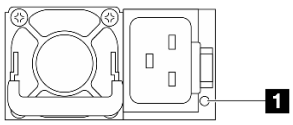

Figure 352. LED on a CRPS PSU (2)

1 Power-supply-unit LED (bi-color, green and yellow)	
Status	**Description**
On (green)	The server is on and the power supply unit is working normally.
Blinking (green, about two flashes per second)	The power supply unit is in firmware updating mode.
On (yellow)	When the power supply unit is lit yellow: • Scenario 1: one of the two power supply units has powered off or is unplugged from the power cord, and at the same time, the other one has power on. • Scenario 2: the power supply unit has failed due to one of the issues listed below: – Over-temperature protection (OTP) – Over-current protection (OCP) – Over-voltage protection (OVP) – Short circuit protection (SCP) – Fan failure
Blinking (yellow, about one flash per second)	The power supply unit is showing warnings, indicating over-temperature warning (OTW), over-current warning (OCW), or a slow fan speed.
Off	The server is powered off, or the power supply unit is not working properly. If the server is powered on but the LED is off, replace the power supply unit.

M.2 LEDs

This topic provides troubleshooting information for the M.2 drive assembly.

- "LEDs on the M.2 interposer" on page 369
- "LEDs on the rear M.2 backplane" on page 370

LEDs on the M.2 interposer

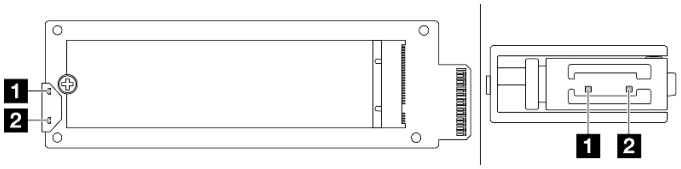

Figure 353. M.2 interposer LEDs

LED	Status and description
1 Activity LED (green)	On: The M.2 drive is idle.
	Off: The M.2 drive appears de-asserted.
	Blinking (about four flashes per second): The I/O activity of the M.2 drive is in progress.
2 Status LED (yellow)	On: A drive fault occurs.
	Off: The M.2 drive is working normally.
	Fast blinking (about four flashes per second): The M.2 drive is being located.
	Slow blinking (about one flash per second): The M.2 drive is being rebuilt.

LEDs on the rear M.2 backplane

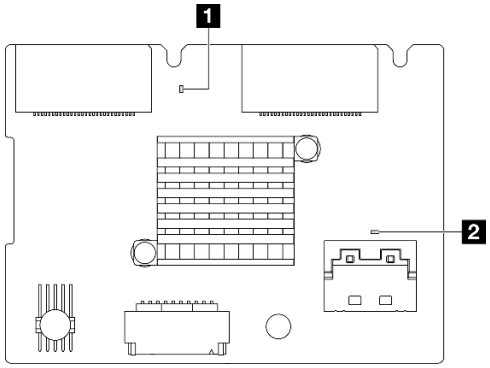

Figure 354. Rear M.2 backplane LEDs

LED	Status and description
1 System heartbeat LED (green)	Blinking: Power on and the RAID firmware is working normally.
	Off: Power off or the RAID firmware is working abnormally.
2 PSoC heartbeat LED (green)	On: The PSoC firmware is working abnormally.
	Off: Power off or the PSoC firmware is working abnormally.
	Fast blinking (about one flash per second): Updating code (bootloader mode).
	Slow blinking (about one flash every two seconds): Exiting initialization (application mode). The PSoC firmware is working normally.

System-board-assembly LEDs

The following illustrations show the light-emitting diodes (LEDs) on the system board assembly.

- "Processor-board LEDs" on page 371
- "System I/O board LEDs" on page 372

Processor-board LEDs

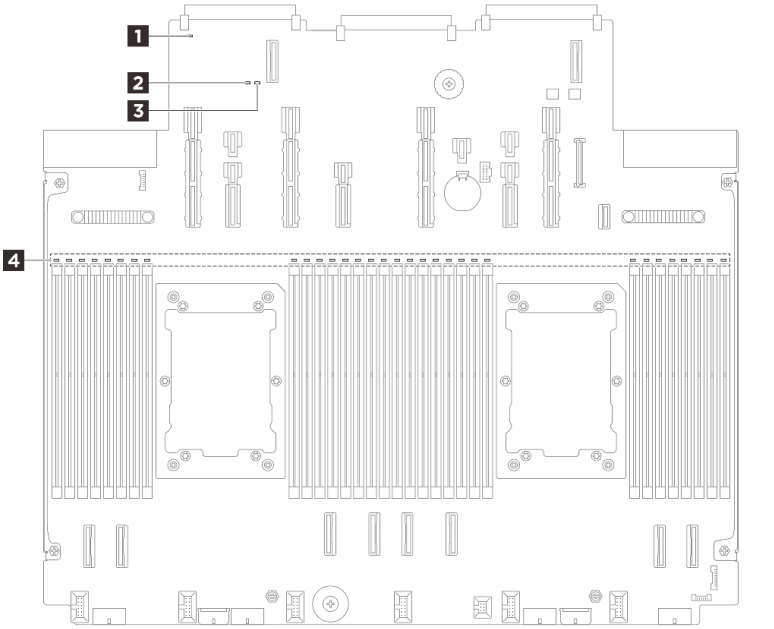

Figure 355. LEDs on the processor board

1 System error LED (yellow)

2 System status LED (green)

3 FPGA heartbeat LED (green)

4 DIMM error LEDs (amber)

1 System error LED (yellow)	
Description	When this yellow LED is lit, another one or more LEDs in the server might also be lit to direct you to the error source.
Action	Check system logs or internal error LEDs to identify the failed part. For more information, see "Front-operator-panel LEDs and buttons" on page 364.

2 System status LED (green)	
Description	The system status LED indicates the working status of the system. • Fast blinking (about four flashes per second): Power fault or is waiting for XCC power permission ready. • Slow blinking (about one flash per second): Power off and is ready to be powered on (standby state). • On: Power on.
Action	• If the system status LED is blinking fast over 5 minutes and cannot power on, check the XCC heartbeat LED and follow the actions for the XCC heartbeat LED. • If the system status LED remains off or is blinking fast (about four flashes per second) and the system error LED on the front panel is on (yellow), the system is in a power fault status. Do the following: 1. Re-plug the power cord. 2. Remove installed adapters/devices, one at a time, until you reach the minimal configuration for debugging. 3. (Trained technicians only) If the problem remains, capture FFDC log, and replace the processor board. 4. If the problem still remains, contact Lenovo Support.

3 FPGA heartbeat LED (green)	
Description	The FPGA heartbeat LED helps you identify the FPGA status. • Blinking (about one flash per second): FPGA is working normally. • On or off: FPGA is not working.
Action	If FPGA heartbeat LED is always off or always on, do the following: 1. Replace the processor board. 2. If the problem remains, contact Lenovo Support.

4 DIMM error LEDs (amber)	
Description	When a memory module error LED is lit, it indicates that the corresponding memory module has failed.
Action	For more information, see “Memory problems” on page 383.

System I/O board LEDs

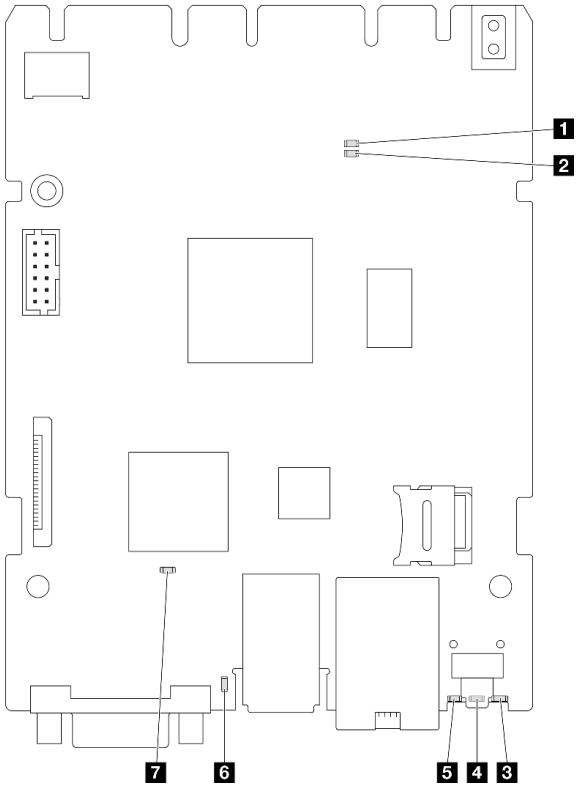

Figure 356. LEDs on the system I/O board (DC-SCM)

1 Table 21 “AP0 LED (green)” on page 373

2 Table 21 “AP1 LED (green)” on page 373

3 Table 21 “RoT fault LED (yellow)” on page 373

4 System error LED (yellow)

5 System ID LED (blue)

6 XCC heartbeat LED (green)

7 Table 21 “SCM FPGA heartbeat LED (green)” on page 373

Table 21. LEDs description

Scenario	1 AP0 LED	2 AP1 LED	3 RoT fault LED	7 SCM FPGA heart-beat LED	6 XCC heart-beat LED	Actions
RoT security module fatal firmware failure	Off	Off	On	N/A	N/A	Replace the system I/O board.
	Blink	N/A	On	N/A	N/A	Replace the system I/O board.
No system power (FPGA heartbeat LED off)	Off	Off	Off	Off	Off	If the AC power is on, but the system board assembly does not have power, then: 1. Check the power supply unit (PSU) or power interposer board (PIB) if any. If the PSU or PIB has any error, replace it. 2. If the PSU or PIB is good, do the following: a. Replace the system I/O board. b. Replace the processor board.
XCC firmware recoverable error	Blink	N/A	Off	N/A	N/A	Information only. No action is required.
XCC firmware is recovered from error	Blink	N/A	Off	N/A	N/A	Information only. No action is required.
UEFI firmware authentication failure	N/A	Blink	Off	N/A	N/A	Information only. No action is required.
UEFI firmware is recovered from authentication failure	N/A	On	Off	N/A	N/A	Information only. No action is required.
System is OK (FPGA heartbeat LED is On)	On	On	Off	On	Blink (1 Hz)	Information only. No action is required.

4 System error LED (yellow)	
Description	When this yellow LED is lit, another one or more LEDs in the server might also be lit to direct you to the error source.
Action	Check system logs or internal error LEDs to identify the failed part. For more information, see “Front-operator-panel LEDs and buttons” on page 364.

5 System ID LED (blue)	
Description	The front system ID LED helps you locate the server.
Action	Each time you press the system ID button, the state of both system ID LEDs changes, and the state can be on, blinking, or off.

6 XCC heartbeat LED (green)	
Description	The XCC heartbeat LED helps you identify the XCC status. • Blinking (1 Hz, about one flash per second) : XCC is working normally. • Blinking at other speeds or always on: XCC is at the initial phase or is working abnormally. • Off: XCC is not working.
Action	• If the XCC heartbeat LED is always off or always on, do the following: – If XCC cannot be accessed: 1. Re-plug the power cord. 2. Check and ensure that the system I/O board is installed correctly. (Trained technicians only) Reinstall it if needed. 3. (Trained technicians only) Replace the system I/O board. – If XCC can be accessed, replace the system I/O board. • If the XCC heartbeat LED is always blinking fast over 5 minutes, do the following: 1. Re-plug the power cord. 2. Check and ensure that the system I/O board is installed correctly. (Trained technicians only) Reinstall it if needed. 3. (Trained technicians only) Replace the system I/O board. • If the XCC heartbeat LED is always blinking slow over 5 minutes, do the following: 1. Re-plug the power cord. 2. Check and ensure that the system I/O board is installed correctly. (Trained technicians only) Reinstall it if needed. 3. If the problem remains, contact Lenovo Support.

General problem determination procedures

Use the information in this section to resolve problems if the event log does not contain specific errors or the server is inoperative.

If you are not sure about the cause of a problem and the power supplies are working correctly, complete the following steps to attempt to resolve the problem:

1. Power off the server.
2. Make sure that the server is cabled correctly.
3. Remove or disconnect the following devices if applicable, one at a time, until you find the failure. Power on and configure the server each time you remove or disconnect a device.
   - Any external devices.
   - Surge-suppressor device (on the server).
   - Printer, mouse, and non-Lenovo devices.
   - Each adapter.
   - Hard disk drives.
   - Memory modules until you reach the minimal configuration for debugging that is supported for the server.

     To determine the minimal configuration for your server, see “Minimal configuration for debugging” in “Technical specifications” on page 345.
4. Power on the server.

If the problem is solved when you remove an adapter from the server, but the problem recurs when you install the same adapter again, suspect the adapter. If the problem recurs when you replace the adapter with a different one, try a different PCIe slot.

If the problem appears to be a networking problem and the server passes all system tests, suspect a network cabling problem that is external to the server.

Resolving suspected power problems

Power problems can be difficult to solve. For example, a short circuit can exist anywhere on any of the power distribution buses. Usually, a short circuit will cause the power subsystem to shut down because of an overcurrent condition.

Complete the following steps to diagnose and resolve a suspected power problem.

Step 1. Check the event log and resolve any errors related to the power.

Note: Start with the event log of the application that is managing the server. For more information about event logs, see “Event logs” on page 343.

Step 2. Check for short circuits, for example, if a loose screw is causing a short circuit on a circuit board.

Step 3. Remove the adapters and disconnect the cables and power cords to all internal and external devices until the server is at the minimal configuration for debugging that is required for the server to start. To determine the minimal configuration for your server, see “Minimal configuration for debugging” in “Technical specifications” on page 345.

Step 4. Reconnect all AC power cords and turn on the server. If the server starts successfully, reseat the adapters and devices one at a time until the problem is isolated.

If the server does not start from the minimal configuration, replace the components in the minimal configuration one at a time until the problem is isolated.

Resolving suspected Ethernet controller problems

The method that you use to test the Ethernet controller depends on which operating system you are using. See the operating-system documentation for information about Ethernet controllers, and see the Ethernet controller device-driver readme file.

Complete the following steps to attempt to resolve suspected problems with the Ethernet controller.

Step 1. Make sure that the correct device drivers are installed and that they are at the latest level.

Step 2. Make sure that the Ethernet cable is installed correctly.

- The cable must be securely attached at all connections. If the cable is attached but the problem remains, try a different cable.
- Make sure that the cable rating is applicable for the network speed selected. For example, an SFP+ cable is only suitable for 10G operation. An SFP25 cable is needed for 25G operation. Likewise for Base-T operation, a CAT5 cable is required for 1G Base-T operation while a CAT6 cable is required for 10G Base-T operation.

Step 3. Set both the adapter port and the switch port to auto-negotiation. If auto-negotiation is not supported on one of the ports, try configuring both ports manually to match each other.

Step 4. Check the Ethernet controller LEDs on the adapter and server. These LEDs indicate whether there is a problem with the connector, cable, or switch.

Although some adapters may vary, when installed vertically the adapter link LED is typically on the left of the port and the activity LED is typically on the right.

The server front panel LED is described in “System LEDs and diagnostics display” in *User Guide* or *System Configuration Guide*.

- The Ethernet link status LED is lit when the Ethernet controller receives a link indication from the switch. If the LED is off, there might be a defective connector or cable or a problem with the switch.
- The Ethernet transmit/receive activity LED is lit when the Ethernet controller sends or receives data over the Ethernet network. If the Ethernet transmit/receive activity is off, make sure that the switch and network are operating and that the correct device drivers are installed.

Step 5. Check for operating-system-specific causes of the problem, and also make sure that the operating system drivers are installed correctly.

Step 6. Make sure that the device drivers on the client and server are using the same protocol.

If the Ethernet controller still cannot connect to the network but the hardware appears to be working, the network administrator must investigate other possible causes of the error.

Troubleshooting by symptom

Use this information to find solutions to problems that have identifiable symptoms.

To use the symptom-based troubleshooting information in this section, complete the following steps:

1. Check the event log of the application that is managing the server and follow the suggested actions to resolve any event codes.
   - If you are managing the server from the Lenovo XClarity Administrator, begin with the Lenovo XClarity Administrator event log.
   - If you are using some other management application, begin with the Lenovo XClarity Controller event log.

   For more information about event logs (see “Event logs” on page 343).
2. Review this section to find the symptoms that you are experiencing and follow the suggested actions to resolve the issue.
3. If the problem persists, contact support (see “Contacting Support” on page 399).

Liquid cooling module problems (Compute Complex Neptune Core Module)

Use this information to resolve problems with the Compute Complex Neptune Core Module.

- “Liquid leak problem” on page 376
- “Cable break problem” on page 378

Liquid leak problem

Liquid leaks can be identified through the following practices:

- If the server is on remote maintenance,
  - A Lenovo XClarity Controller event shows:

    FQXSPCA0040N: Liquid is leaking from open loop [CoolingSensorName].

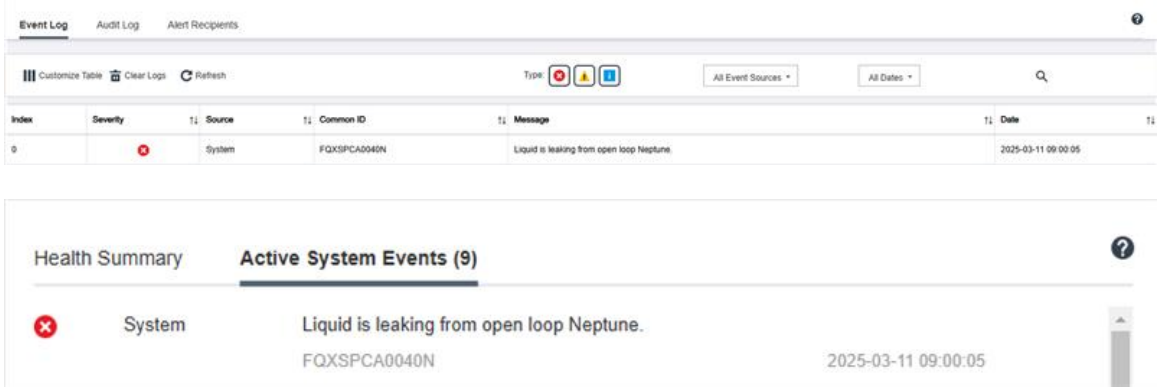

- Lenovo XClarity Controller has defined lots of system conditions as IPMI sensors. Users can use IPMI commands to check system running status. Here are examples of executing ipmitool, an open-source common tool which follows Intel's IPMI standard. Check for liquid leakage status with command lines as shown.
  -
```
sysadmin@Dev-Server:~$ ipmitool -C 17 -I lanplus -H 10.132.225.164 -U USERID -P  ********  sel elist
   1 | 12/26/2022 | 10:38:17 | Event Logging Disabled SEL Fullness | Log area reset/cleared | Asserted
   2 | 12/26/2022 | 10:38:22 | Cooling Device Liquid Leak | Transition to Critical from less severe | Asserted
```
  - The event logs shown with the parameter `sel elist`.
  -
```
sysadmin@Dev-Server:~$ ipmitool -C 17 -I lanplus -H 10.132.225.164 -U USERID -P  ********  sdr elist |grep "Liquid Leak"
Liquid Leak      | EAh | ok  | 30.1 | Transition to Critical from less severe
```
    `Liquid Leak | EAh | ok | 30.1 | Transition to Critical from less severe`

    The status of all sensors can be fetched with the parameter `sdr elist`. If liquid leakage happens, the log above will show up.
- If the server is within reach, and the amber LED is lit on the front operator panel, potential liquid leaks may have occurred. It is required to open the top cover to check the LED status of the leakage detection sensor module. See "Front-operator-panel LEDs and buttons" and "LED on the leakage detection sensor module" in *User Guide* for more details.

Steps to resolve liquid leaks

If the LED on the leakage detection sensor module is blinking green, follow the procedures to get help.

1. Save and back up data and operations.
2. Power off the server and remove the quick connect plugs from the manifolds.
3. Slide the server out or remove the server from the rack. See "Install the server to the rack (friction rails)" on page 38 or "Install the server to the rack (slide rails)" on page 46.
4. Remove the top cover. See "Remove the top cover" on page 335.
5. Check 1 to 9 leak-prone areas around the outlet and inlet hoses, system board assembly. If liquid found around the hoses and system board assembly, clean up the liquid.

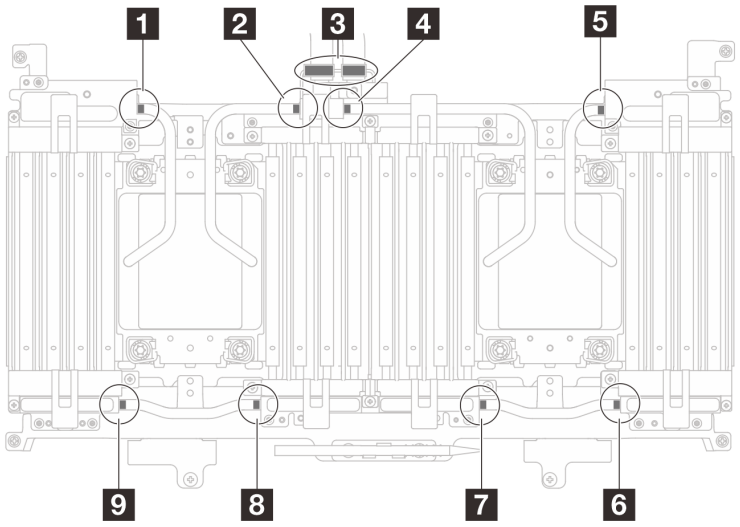

Figure 357. Leak-prone areas

6. Check for the top cover of the server below to see if dripping happens. If yes, repeat previous steps to servers below.
7. Contact Lenovo Support.

Cable break problem

A Lenovo XClarity Controller event shows:

FQXSPCA0042M: Liquid leak detector for [DeviceType] is faulty.

Step to resolve cable break

Contact Lenovo Support for detail checking.

Liquid cooling module problems (Processor Neptune Core Module)

Use this information to resolve problems with the Processor Neptune Core Module.

- "Liquid leak problem" on page 378
- "Cable break problem" on page 381

Liquid leak problem

Liquid leaks can be identified through the following practices:

- If the server is on remote maintenance,
  - A Lenovo XClarity Controller event shows:

    FQXSPCA0040N: Liquid is leaking from open loop [CoolingSensorName].

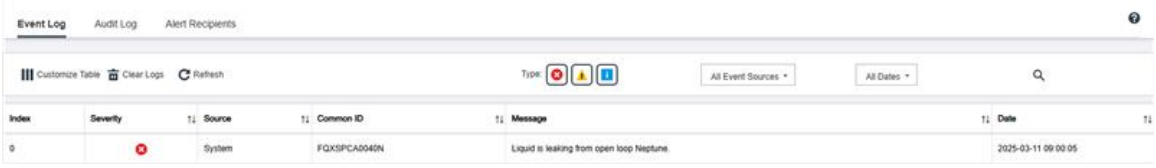

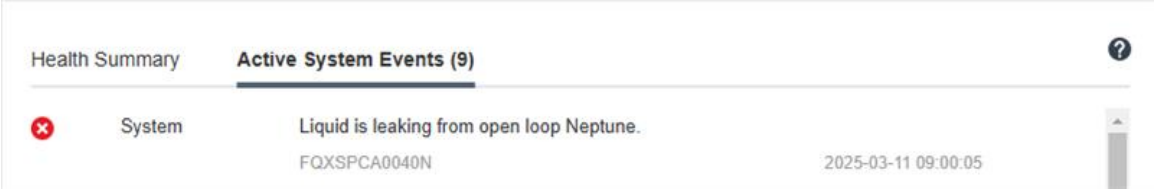

  - Lenovo XClarity Controller has defined lots of system conditions as IPMI sensors. Users can use IPMI commands to check system running status. Here are examples of executing ipmitool, an open-source common tool which follows Intel's IPMI standard. Check for liquid leakage status with command lines as shown.
    -
```
sysadmin@Dev-Server:~$ ipmitool -C 17 -I lanplus -H 10.132.225.164 -U USERID -P  ********  sel elist
   1 | 12/26/2022 | 10:38:17 | Event Logging Disabled SEL Fullness | Log area reset/cleared | Asserted
   2 | 12/26/2022 | 10:38:22 | Cooling Device Liquid Leak | Transition to Critical from less severe | Asserted
```

      The event logs shown with the parameter `sel elist`.
    -
```
sysadmin@Dev-Server:~$ ipmitool -C 17 -I lanplus -H 10.132.225.164 -U USERID -P  ********  sdr elist |grep "Liquid Leak"
Liquid Leak      | EAh | ok  | 30.1 | Transition to Critical from less severe
```

      `Liquid Leak | EAh | ok | 30.1 | Transition to Critical from less severe`

      The status of all sensors can be fetched with the parameter `sdr elist`. If liquid leakage happens, the log above will show up.
- If the server is within reach, and the amber LED is lit on the front operator panel, potential liquid leaks may have occurred. It is required to open the top cover to check the LED status of the leakage detection sensor module. See "Front-operator-panel LEDs and buttons" and "LED on the leakage detection sensor module" in *User Guide* for more details.

Steps to resolve liquid leaks

If the LED on the leakage detection sensor module is blinking green, follow the procedures to get help.

1. Save and back up data and operations.
2. Power off the server and remove the quick connect plugs from the manifolds.
3. Slide the server out or remove the server from the rack. See "Server replacement" on page 34.
4. Remove the top cover. See "Remove the top cover" on page 335.
5. Check for liquid leaks around the outlet and inlet hoses, system board assembly, and under the cold plate covers:

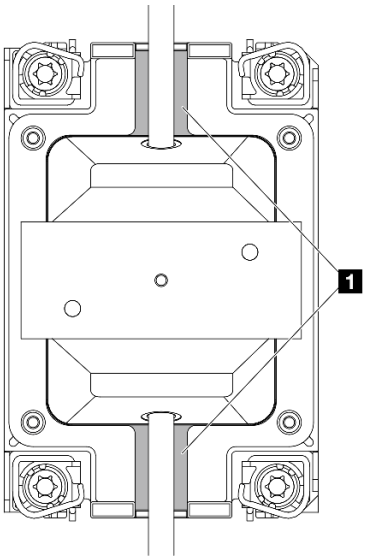

Figure 358. Leak-prone areas

Note: If leak happens, the liquid tends to collect around 1 leak-prone areas.

a. If liquid found around the hoses and system board assembly, clean up the liquid.

b. If liquid found under the cold plate covers:

1) As illustrated below, remove at least four DIMMs from both sides to get access to the clips on the cold plate covers. To remove memory modules, see "Remove a memory module" on page 209.

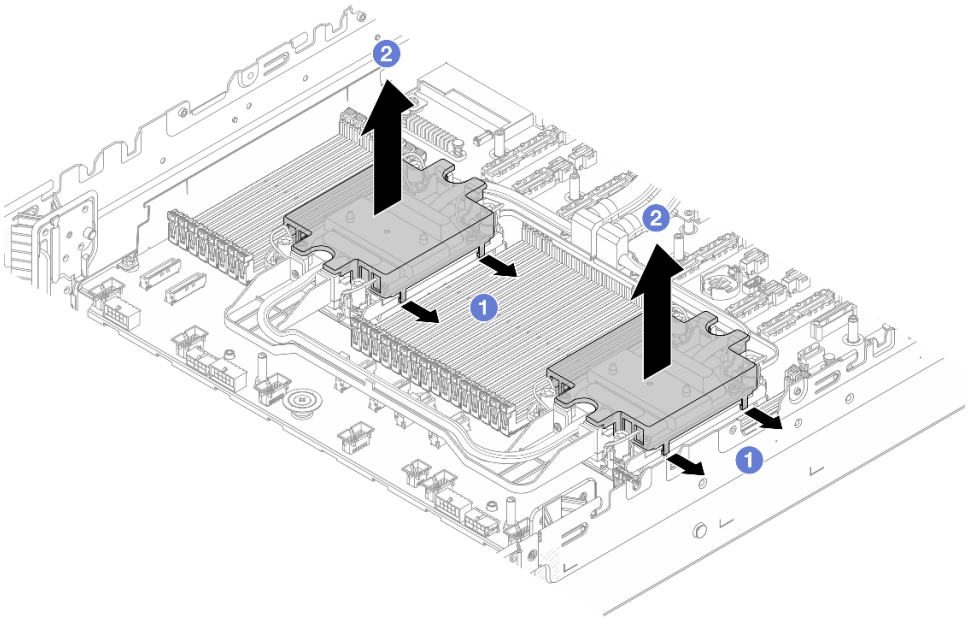

Figure 359. Removing the cold plate cover

a) 1 Open the clips.

b) 2 Remove the cold plate cover.

2) Clean up the liquid on the cold plates.

6. Check for the top cover of the server below to see if dripping happens. If yes, repeat previous steps to servers below.
7. Contact Lenovo Support.

Cable break problem

A Lenovo XClarity Controller event shows:

FQXSPCA0042M: Liquid leak detector for [DeviceType] is faulty.

Steps to resolve cable break

1. Check if there is a de-assert event (FQXSPCA2042I) triggered.
2. If yes, ignore this event.
3. If not, contact Lenovo Support for detail checking.

Intermittent problems

Use this information to solve intermittent problems.

- "Intermittent external device problems" on page 381
- "Intermittent KVM problems" on page 381
- "Intermittent unexpected reboots" on page 382

Intermittent external device problems

Complete the following steps until the problem is solved.

1. Update the UEFI and XCC firmware to the latest versions.
2. Make sure that the correct device drivers are installed. See the manufacturer's website for documentation.
3. For a USB device:
   a. Make sure that the device is configured correctly.
   b. Connect the device to another port. If using a USB hub, remove the hub and connect the device directly to the server. Make sure that the device is configured correctly for the port.

Intermittent KVM problems

Complete the following steps until the problem is solved.

Video problems:

1. Make sure that all cables and the console breakout cable are properly connected and secure.
2. Make sure that the monitor is working properly by testing it on another server.
3. Test the console breakout cable on a working server to ensure that it is operating properly. Replace the console breakout cable if it is defective.

Keyboard problems:

Make sure that all cables and the console breakout cable are properly connected and secure.

Mouse problems:

Make sure that all cables and the console breakout cable are properly connected and secure.

Intermittent unexpected reboots

Note: Some uncorrectable errors require that the server reboot so that it can disable a device, such as a memory DIMM or a processor to allow the machine to boot up properly.

1. If the reset occurs during POST and the POST watchdog timer is enabled, make sure that sufficient time is allowed in the watchdog timeout value (POST Watchdog Timer).

   To check the POST watchdog time, restart the server and press F1 to display the LXPM system setup interface. For more information, see the “Startup” section in the LXPM documentation compatible with your server at https://pubs.lenovo.com/lxpm-overview/. Then, click **System Settings → Recovery and RAS → System Recovery → POST Watchdog Timer**.
2. If the reset occurs after the operating system starts, enter the operating system when the system operates normally and set up operating system kernel dump process (Windows and Linux base operating systems will be using different method). Enter the UEFI setup menus and disable the feature, or disable it with the following OneCli command.
   `OneCli.exe config set SystemRecovery.RebootSystemOnNMI Disable --bmc XCC_USER:XCC_PASSWORD@XCC_IPAddress`
3. See the management controller event log to check for an event code that indicates a reboot. See “Event logs” on page 343 for information about viewing the event log. If you are using Linux base operating system, then capture all logs back to Lenovo support for further investigation.

Keyboard, mouse, KVM switch or USB-device problems

Use this information to solve problems related to a keyboard, mouse, KVM switch or USB-device problems.

- “All or some keys on the keyboard do not work” on page 382
- “Mouse does not work” on page 382
- “KVM switch problems” on page 382
- “USB-device does not work” on page 383

All or some keys on the keyboard do not work

1. Make sure that:
   - The keyboard cable is securely connected.
   - The server and the monitor are turned on.
2. If you are using a USB keyboard, run the Setup Utility and enable keyboardless operation.
3. If you are using a USB keyboard and it is connected to a USB hub, disconnect the keyboard from the hub and connect it directly to the server.
4. Replace the keyboard.

Mouse does not work

1. Make sure that:
   - The mouse cable is securely connected to the server.
   - The mouse device drivers are installed correctly.
   - The server and the monitor are turned on.
   - The mouse option is enabled in the Setup utility.
2. If you are using a USB mouse and it is connected to a USB hub, disconnect the mouse from the hub and connect it directly to the server.
3. Replace the mouse.

KVM switch problems

1. Make sure that the KVM switch is supported by your server.

2. Make sure that the KVM switch is powered on correctly.
3. If the keyboard, mouse or monitor can be operated normally with direct connection to the server, then replace the KVM switch.

USB-device does not work

1. Make sure that:
   - The correct USB device driver is installed.
   - The operating system supports USB devices.
2. Make sure that the USB configuration options are set correctly.

   From the Lenovo XClarity Controller management controller web interface, click **System Configuration → Server Properties → USB Ports Enablement**.
3. If you are using a USB hub, disconnect the USB device from the hub and connect it directly to the server.

Hot-swap M.2 drive problems

See this section to solve problems related to a hot-swap M.2 drive.

- "A hot-swap M.2 drive is de-asserted" on page 383
- "XCC event log shows PCIe errors concerning M.2 drive" on page 383

Note: For M.2 LED status and description, see "M.2 LEDs" on page 369.

A hot-swap M.2 drive is de-asserted

Complete the following steps until the problem is solved:

1. Swap the faulty M.2 drive assembly with a functional one.
   - If the problem persists in the original fault location (now occupied by the functional drive assembly), it indicates that the M.2 backplane may be faulty. In this case, replace the M.2 backplane.
   - If the problem persists on the originally faulty M.2 drive assembly, it indicates that the M.2 drive or M.2 interposer may be faulty. In this case, go to the next step to continue troubleshooting.
2. Swap the M.2 drive on the faulty M.2 drive assembly with a functional one.
   - If the problem is solved, it indicates that the M.2 drive may be defective and should be replaced.
   - If the problem persists, it indicates that the M.2 interposer may be defective and should be replaced.
3. If the problem persists, record M.2 LED status, collect the FFDC file, and contact Lenovo Support.

XCC event log shows PCIe errors concerning M.2 drive

Complete the following steps until the problem is solved:

1. Update the PSoC firmware and RAID firmware.
2. If the problem persists after firmware update, replace the M.2 backplane.
3. If the problem persists after replacing, record M.2 LED status, collect the FFDC file, and contact Lenovo Support.

Memory problems

See this section to resolve issues related to memory.

Memory modules identified as failed

Note: Each time you install or remove a memory module, you must disconnect the server from the power source; then, wait 10 seconds before restarting the server.

Complete the following procedure to solve the problem.

1. Check and make sure the DIMM slots are intact and there is no dust or foreign objects in the DIMM slots.
2. See “Memory module installation rules and order” on page 5 to make sure the present memory module population sequence is supported. An unsupported memory module population sequence may cause certain memory modules to be disabled. Correcting the population and rebooting the system can resolve such issues.
3. Swap the positions of the failed memory module and a functional one, and then restart the system to observe whether the error persists.
   - If the error continues to occur on the originally failed memory module, this strongly suggests that the module itself is defective and should be replaced.
   - If the error appears in the original error location (now occupied by the functional module), the issue is likely unrelated to the memory modules and may instead stem from the processor or processor board. Continue the following step for further troubleshooting.
4. Swap the faulty processor (associated with memory errors) with a functional processor to determine whether the memory module issue is processor-related.
   - If the error persists in the original error location after swapping processors, this indicates a processor board-related issue. Please contact a professional technician to conduct further inspection of the processor board.
   - If the error follows the originally faulty processor after the swap, the problem is likely processor-related, and replacing the processor should resolve the issue.

Monitor and video problems

Use this information to solve problems related to a monitor or video.

- “Incorrect characters are displayed” on page 384
- “Screen is blank” on page 384
- “Screen goes blank when you start some application programs” on page 385
- “The monitor has screen jitter, or the screen image is wavy, unreadable, rolling, or distorted” on page 385
- “The wrong characters appear on the screen” on page 385

Incorrect characters are displayed

Complete the following steps:

1. Verify that the language and locality settings are correct for the keyboard and operating system.
2. If the wrong language is displayed, update the server firmware to the latest level. See “Update the firmware” in *User Guide* or *System Configuration Guide*.

Screen is blank

1. If the server is attached to a KVM switch, bypass the KVM switch to eliminate it as a possible cause of the problem: connect the monitor cable directly to the correct connector on the rear of the server.
2. The management controller remote presence function is disabled if you install an optional video adapter. To use the management controller remote presence function, remove the optional video adapter.

3. If the server is installed with the graphical adapters while turning on the server, the Lenovo logo is displayed on the screen after approximately 3 minutes. This is normal operation while the system loads.
4. Make sure that:
   - The server is turned on and there is power supplied to the server.
   - The monitor cables are connected correctly.
   - The monitor is turned on and the brightness and contrast controls are adjusted correctly.
5. Make sure that the correct server is controlling the monitor, if applicable.
6. Make sure that the video output is not affected by corrupted server firmware; See “Update the firmware” in *User Guide* or *System Configuration Guide*.
7. If the problem remains, contact Lenovo Support.

Screen goes blank when you start some application programs

1. Make sure that:
   - The application program is not setting a display mode that is higher than the capability of the monitor.
   - You installed the necessary device drivers for the application.

The monitor has screen jitter, or the screen image is wavy, unreadable, rolling, or distorted

1. If the monitor self-tests show that the monitor is working correctly, consider the location of the monitor. Magnetic fields around other devices (such as transformers, appliances, fluorescents, and other monitors) can cause screen jitter or wavy, unreadable, rolling, or distorted screen images. If this happens, turn off the monitor.

   Attention: Moving a color monitor while it is turned on might cause screen discoloration.

   Move the device and the monitor at least 305 mm (12 in.) apart, and turn on the monitor.

   Notes:

   a. To prevent diskette drive read/write errors, make sure that the distance between the monitor and any external diskette drive is at least 76 mm (3 in.).

   b. Non-Lenovo monitor cables might cause unpredictable problems.
2. Reseat the monitor cable.
3. Replace the components listed in step 2 one at a time, in the order shown, restarting the server each time:
   a. Monitor cable
   b. Video adapter (if one is installed)
   c. Monitor
   d. (Trained technicians only) System board.

The wrong characters appear on the screen

Complete the following steps until the problem is solved:

1. Verify that the language and locality settings are correct for the keyboard and operating system.
2. If the wrong language is displayed, update the server firmware to the latest level. See “Update the firmware” in *User Guide* or *System Configuration Guide*.

Observable problems

Use this information to solve observable problems.

- “The server immediately displays the POST Event Viewer when it is turned on” on page 386

- “Server is unresponsive (POST is complete and operating system is running)” on page 386
- “Server is unresponsive (POST failed and cannot start System Setup)” on page 387
- “Voltage planar fault is displayed in the event log” on page 387
- “Unusual smell” on page 387
- “Server seems to be running hot” on page 387
- “Cracked parts or cracked chassis” on page 388

The server immediately displays the POST Event Viewer when it is turned on

Complete the following steps until the problem is solved.

1. Correct any errors that are indicated by the system LEDs and diagnostics display.
2. Make sure that the server supports all the processors and that the processors match in speed and cache size.

   You can view processor details from system setup.

   To determine if the processor is supported for the server, see https://serverproven.lenovo.com.
3. (Trained technicians only) Make sure that processor 1 is seated correctly.
4. (Trained technicians only) Remove processor 2 and restart the server.
5. Replace the following components one at a time, in the order shown, restarting the server each time:
   a. (Trained technicians only) Processor
   b. (Trained technicians only) System board

Server is unresponsive (POST is complete and operating system is running)

Complete the following steps until the problem is solved.

- If you are in the same location as the server, complete the following steps:
  1. If you are using a KVM connection, make sure that the connection is operating correctly. Otherwise, make sure that the keyboard and mouse are operating correctly.
  2. If possible, log in to the server and verify that all applications are running (no applications are hung).
  3. Restart the server.
  4. If the problem remains, make sure that any new software has been installed and configured correctly.
  5. Contact your place of purchase of the software or your software provider.
- If you are accessing the server from a remote location, complete the following steps:
  1. Make sure that all applications are running (no applications are hung).
  2. Attempt to log out of the system and log back in.
  3. Validate the network access by pinging or running a trace route to the server from a command line.
     a. If you are unable to get a response during a ping test, attempt to ping another server in the enclosure to determine whether it is a connection problem or server problem.
     b. Run a trace route to determine where the connection breaks down. Attempt to resolve a connection issue with either the VPN or the point at which the connection breaks down.
  4. Restart the server remotely through the management interface.
  5. If the problem remains, verify that any new software has been installed and configured correctly.
  6. Contact your place of purchase of the software or your software provider.

Server is unresponsive (POST failed and cannot start System Setup)

Configuration changes, such as added devices or adapter firmware updates, and firmware or application code problems can cause the server to fail POST (the power-on self-test).

If this occurs, the server responds in either of the following ways:

- The server restarts automatically and attempts POST again.
- The server hangs, and you must manually restart the server for the server to attempt POST again.

After a specified number of consecutive attempts (automatic or manual), the server reverts to the default UEFI configuration and starts System Setup so that you can make the necessary corrections to the configuration and restart the server. If the server is unable to successfully complete POST with the default configuration, there might be a problem with the system board.

You can specify the number of consecutive restart attempts in System Setup. Restart the server and press the key according to the on-screen instructions to display the LXPM system setup interface. For more information, see the “Startup” section in the LXPM documentation compatible with your server at https://pubs.lenovo.com/lxpm-overview/. Then, click **System Settings → Recovery and RAS → POST Attempts → POST Attempts Limit**. Available options are 3, 6, 9, and disable.

Voltage planar fault is displayed in the event log

Complete the following steps until the problem is solved.

1. Revert the system to the minimum configuration. See “Specifications” on page 345 for the minimally required number of processors and DIMMs.
2. Restart the system.
   - If the system restarts, add each of the removed items one at a time and restart the system each time until the error occurs. Replace the item for which the error occurs.
   - If the system does not restart, suspect the system board.

Unusual smell

Complete the following steps until the problem is solved.

1. An unusual smell might be coming from newly installed equipment.
2. If the problem remains, contact Lenovo Support.

Server seems to be running hot

Complete the following steps until the problem is solved.

Multiple servers or chassis:

1. Make sure that the room temperature is within the specified range (see “Specifications” on page 345).
2. Make sure that the fans are installed correctly.
3. Update the UEFI and XCC to the latest versions.
4. Make sure that the fillers in the server are installed correctly (see Chapter 1 “Hardware replacement procedures” on page 1 for detailed installation procedures).
5. Use the IPMI command to ramp up the fan speed to the full fan speed to see whether the issue can be resolved.

   Note: The IPMI raw command should only be used by trained technicians and each system has its own specific IPMI raw command.

6. Check the management processor event log for rising temperature events. If there are no events, the server is running within normal operating temperatures. Note that you can expect some variation in temperature.

Cracked parts or cracked chassis

Contact Lenovo Support.

Optional-device problems

Use this information to solve problems related to optional devices.

- "External USB device is not recognized" on page 388
- "PCIe adapter is not recognized or is not functioning" on page 388
- "Insufficient PCIe resources are detected." on page 388
- "A Lenovo optional device that was just installed does not work." on page 389
- "A Lenovo optional device that worked previously does not work now" on page 389

External USB device is not recognized

Complete the following steps until the problem is resolved:

1. Update the UEFI firmware to the latest version.
2. Make sure that the proper drivers are installed on the compute node. See the product documentation for the USB device for information about device drivers.
3. Use the Setup utility to make sure that the device is configured correctly.
4. If the USB device is plugged into a hub or the console breakout cable, unplug the device and plug it directly into the USB port on the front of the server.

PCIe adapter is not recognized or is not functioning

Complete the following steps until the problem is resolved:

1. Update the UEFI firmware to the latest version.
2. Check the event log and resolve any issues related to the device.
3. Validate that the device is supported for the server (see https://serverproven.lenovo.com). Make sure that the firmware level on the device is at the latest supported level and update the firmware if applicable.
4. Make sure that the adapter is installed in a correct slot.
5. Make sure that the proper device drivers are installed for the device.
6. Check http://datacentersupport.lenovo.com for any tech tips (also known as retain tips or service bulletins) that might be related to the adapter.
7. Ensure any adapter external connections are correct and that the connectors are not physically damaged.
8. Make sure that the PCIe adapter is installed with the supported operating system.

Insufficient PCIe resources are detected.

If you see an error message stating "Insufficient PCI Resources Detected," complete the following steps until the problem is resolved:

1. Press Enter to access System Setup Utility.
2. Select **System Settings → Devices and I/O Ports → MM Config Base**; then, modify the setting to increase the device resources. For example, modify 3 GB to 2 GB or modify 2 GB to 1 GB.
3. Save the settings and restart the system.

4. If the error recurs with the highest device resource setting (1GB), shutdown the system and remove some PCIe devices; then, power on the system.
5. If the reboot failed, repeat step 1 to step 4.
6. If the error recurs, press Enter to access System Setup Utility.
7. Select **System Settings → Devices and I/O Ports → PCI 64–Bit Resource Allocation**, then; modify the setting from **Auto** to **Enable**.
8. DC cycle the system and ensure the system is enter UEFI boot menu or the operating system; then, capture the FFDC log.
9. Contact Lenovo technical support.

A Lenovo optional device that was just installed does not work.

1. Make sure that:
   - The device is supported for the server (see https://serverproven.lenovo.com).
   - You followed the installation instructions that came with the device and the device is installed correctly.
   - You have not loosened any other installed devices or cables.
   - You updated the configuration information in system setup. When you start a server and press the key according to the on-screen instructions to display the Setup Utility. For more information, see the "Startup" section in the LXPM documentation compatible with your server at https://pubs.lenovo.com/lxpm-overview/. Whenever memory or any other device is changed, you must update the configuration.
2. Reseat the device that you have just installed.
3. Replace the device that you have just installed.
4. Reseat the cable connection and check there is no physical damage to the cable.
5. If there is any cable damage, then replace the cable.

A Lenovo optional device that worked previously does not work now

1. Make sure that all of the cable connections for the device are secure.
2. If the device comes with test instructions, use those instructions to test the device.
3. Reseat the cable connection and check if any physical parts have been damaged.
4. Replace the cable.
5. Reseat the failing device.
6. Replace the failing device.

Performance problems

Use this information to solve performance problems.

- "Network performance" on page 389
- "Operating system performance" on page 390

Network performance

Complete the following steps until the problem is solved:

1. Isolate which network is operating slowly (such as storage, data, and management). You might find it helpful to use ping tools or operating-system tools such as task manager or resource manager.
2. Check for traffic congestion on the network.
3. Update the NIC device driver and firmware, or the storage device controller device driver.

4. Use the traffic-diagnostic tools that are provided by the IO-module manufacturer.

Operating system performance

Complete the following steps until the problem is solved:

1. If you have recently made changes to the server (for example updated device drivers or installed software applications) remove the changes.
2. Check for any networking issues.
3. Check the operating system logs for performance related errors.
4. Check for events related to high temperatures and power issues as the server might be throttled to help with cooling. If it is throttled, reduce the workload on the server to help improve performance.
5. Check for events related to disabled DIMMs. If you do not have enough memory for the application workload, your operating system will have poor performance.
6. Ensure that the workload is not too high for the configuration.

Power on and power off problems

Use this information to resolve issues when powering on or powering off the server.

- "The power button does not work (server does not start)" on page 390
- "Server does not power on" on page 391
- "Server does not power off" on page 391

The power button does not work (server does not start)

Note: After the server is connected to AC power, it will take one to three minutes for XCC to initialize. The power button does not work during the initialization.

Complete the following steps until the problem is resolved:

1. Make sure that the power button on the server is working correctly:
   a. Disconnect the server power cords.
   b. Reconnect the server power cords.
   c. Reconnect the front operator panel cable, and then repeat steps 1a and 1b.
      - If the server starts, reseat the front operator panel.
      - If the problem remains, replace the front operator panel.
2. Make sure that:
   - The power cords are correctly connected to the server and to a working electrical outlet.
   - The LEDs on the power supply units work normally.
   - The power button LED is lit on and flash slowly.
   - The button-push force is sufficient and the button shows release response after pushed.
3. If the power button LED does not light on or flash correctly, reseat all the power supply units and make sure that the power input status LED is lit on.
4. If you have just installed an optional device, remove it, and restart the server.
5. If the issue is still observed or without power button LED lit on, implement the minimum configuration to check whether any specific components have locked the power permission. Replace power supply units and check the power button function after installing each unit.
6. If all procedures are tried and the issue cannot be resolved, collect the failure information with system logs captured and contact Lenovo Support.

Server does not power on

Complete the following steps until the problem is resolved:

1. Check the event logs for any events related to the server not powering on.
2. Check for any LEDs that are blinking amber or yellow.
3. Check the system status LED on the system board (system board assembly). See “LEDs on the system board assembly” in *User Guide*.
4. Check if the power input status LED is off or the yellow LED is lit on the power supply unit.
5. Do the AC cycle to the system, that is, power off the power supply units and re-power them on.
6. Remove the CMOS battery for at least ten seconds, then, reinstall the CMOS battery.
7. Try to power on the system by IPMI command through XCC or by the power button.
8. Implement the minimum configuration (one processor, one DIMM and one PSU without any adapter or any drive installed).
9. Reseat all power supply units and make sure that the power input status LED on the power supply unit is lit.
10. Replace power supply units and check the power button function after installing each unit.
11. If the issue cannot be resolved by all attempts above, call service to review the issue symptoms and see whether the system board (system board assembly) replacement is necessary.

Server does not power off

Complete the following steps until the problem is resolved:

1. Determine whether you are using an Advanced Configuration and Power Interface (ACPI) or a non-ACPI operating system. If you are using a non-ACPI operating system, complete the following steps:
   a. Press Ctrl+Alt+Delete.
   b. Turn off the server by pressing the power button on the front operator panel and holding it down for 5 seconds.
   c. Restart the server.
   d. If the server fails POST and the power-control button does not work, disconnect the power cord for 20 seconds; then, reconnect the power cord and restart the server.
2. If the problem remains or if you are using an ACPI-aware operating system, suspect the system board (system board assembly).

Power problems

Use this information to resolve issues related to power.

System error LED is on and event log "Power supply has lost input" is displayed

To resolve the problem, ensure that:

1. The power supply unit is properly connected to a power cord.
2. The power cord is connected to a properly grounded electrical outlet for the server.
3. Make sure that the AC source of the power supply unit is stable within the supported range.
4. Swap power supply units to see that the issue follows which power supply unit, if the issue follows one power supply unit, then place the failing one.
5. Review the event logs and identify problem category, follow the event log actions and fix the problem.

Serial-device problems

Use this information to solve problems with serial ports or devices.

- “Number of displayed serial ports is less than the number of installed serial ports” on page 392
- “Serial device does not work” on page 392

Number of displayed serial ports is less than the number of installed serial ports

Complete the following steps until the problem is solved.

1. Make sure that:
   - Each port is assigned a unique address in the Setup utility and none of the serial ports is disabled.
   - The serial-port adapter (if one is present) is seated correctly.
2. Reseat the serial port adapter.
3. Replace the serial port adapter.

Serial device does not work

1. Make sure that:
   - The device is compatible with the server.
   - The serial port is enabled and is assigned a unique address.
   - The device is connected to the correct connector (see “System-board-assembly connectors” in *User Guide* or *System Configuration Guide*).
2. To enable the serial port module on Linux or Microsoft Windows, do one of the followings according to the installed operating system:

   Note: If the Serial over LAN (SOL) or Emergency Management Services (EMS) feature is enabled, the serial port will be hidden on Linux and Microsoft Windows. Therefore, it is required to disable SOL and EMS to use the serial port on operating systems for serial devices.

   - For Linux:

     Open the ipmitool and enter the following command to disable the Serial over LAN (SOL) feature:

     ```
     -I lanplus -H IP -U USERID -P PASSWORD sol deactivate
     ```

   - For Microsoft Windows:
     a. Open the ipmitool and enter the following command to disable the SOL feature:

        ```
        -I lanplus -H IP -U USERID -P PASSWORD sol deactivate
        ```

     b. Open Windows PowerShell and enter the following command to disable the Emergency Management Services (EMS) feature:

        ```
        Bcdedit /ems off
        ```

     c. Restart the server to ensure that the EMS setting takes effect.
3. Reseat the following components:
   a. Failing serial device.
   b. Serial cable.
4. Replace the following components:
   a. Failing serial device.
   b. Serial cable.
5. (Trained technician only) Replace the system board.

Software problems

Use this information to solve software problems.

1. To determine whether the problem is caused by the software, make sure that:
   - The server has the minimum memory that is needed to use the software. For memory requirements, see the information that comes with the software.

     Note: If you have just installed an adapter or memory, the server might have a memory-address conflict.
   - The software is designed to operate on the server.
   - Other software works on the server.
   - The software works on another server.
2. If you receive any error messages while you use the software, see the information that comes with the software for a description of the messages and suggested solutions to the problem.
3. Contact your place of purchase of the software.

Storage drive problems

Use this information to resolve issues related to the storage drives.

- "Server cannot identify a drive" on page 393
- "Multiple drives fail" on page 394
- "Multiple drives are offline" on page 394
- "A replacement drive does not rebuild" on page 394
- "Green drive activity LED does not represent actual state of associated drive" on page 394
- "Yellow drive status LED does not represent actual state of associated drive" on page 395
- "U.3 NVMe drive can be detected in NVMe connection, but cannot be detected in Tri-mode" on page 395

Server cannot identify a drive

Complete the following steps until the problem is solved.

1. Observe the target yellow drive status LED. If the LED is lit, it indicates a drive fault.
2. If the status LED is lit, remove the drive from the bay, wait for 45 seconds, and reinsert the drive. Make sure that the drive assembly connects to the drive backplane.
3. Observe the target green drive activity LED and the yellow status LED and perform corresponding operations in different situations:
   - If the green activity LED is flashing and the yellow status LED is not lit, the drive is identified by the controller and is working correctly. Run the diagnostics tests for the drives. When you start a server and press the key according to the on-screen instructions, the LXPM interface is displayed by default. (For more information, see the "Startup" section in the LXPM documentation compatible with your server at https://pubs.lenovo.com/lxpm-overview/.) From the Diagnostic page, click **Run Diagnostic → Disk Drive Test**.
   - If the green activity LED is flashing and the yellow status LED is flashing slowly, the drive is identified by the controller and is rebuilding.
   - If neither LED is lit or flashing, check whether the drive backplane is correctly seated. For details, go to step 4.
   - If the green activity LED is flashing and the yellow status LED is lit, replace the drive.
4. Make sure that the drive backplane is correctly seated. When it is correctly seated, the drive assemblies correctly connect to the backplane without curving or causing movement of the backplane.

5. Reseat the backplane power cable and repeat steps 1 through 3.
6. Reseat the backplane signal cable and repeat steps 1 through 3.
7. Suspect the backplane signal cable or the backplane:
   - Replace the affected backplane signal cable.
   - Replace the affected backplane.
8. Run the diagnostics tests for the drives. When you start a server and press F1, the LXPM interface is displayed by default. (For more information, see the “Startup” section in the LXPM documentation compatible with your server at https://pubs.lenovo.com/lxpm-overview/.) You can perform drive diagnostics from this interface. From the Diagnostic page, click **Run Diagnostic → Disk Drive Test**.

   Based on those tests:
   - If the backplane passes the test but the drives are not recognized, replace the backplane signal cable and run the tests again.
   - Replace the backplane.
   - If the adapter fails the test, disconnect the backplane signal cable from the adapter and run the tests again.
   - If the adapter fails the test, replace the adapter.

Multiple drives fail

Complete the following steps until the problem is solved:

- View the Lenovo XClarity Controller event log for events related to power supplies or vibration issues and resolve those events.
- Make sure that the device drivers and firmware for the drive and server are at the latest level.

Important: Some cluster solutions require specific code levels or coordinated code updates. If the device is part of a cluster solution, verify that the latest level of code is supported for the cluster solution before you update the code.

Multiple drives are offline

Complete the following steps until the problem is solved:

- View the Lenovo XClarity Controller event log for events related to power supplies or vibration issues and resolve those events.
- View the storage subsystem log for events related to the storage subsystem and resolve those events.

A replacement drive does not rebuild

Complete the following steps until the problem is solved:

1. Make sure that the drive is recognized by the adapter (the green drive activity LED is flashing).
2. Review the SAS/SATA RAID adapter documentation to determine the correct configuration parameters and settings.

Green drive activity LED does not represent actual state of associated drive

Complete the following steps until the problem is solved:

1. If the green drive activity LED does not flash when the drive is in use, run the diagnostics tests for the drives. When you start a server and press F1, the LXPM interface is displayed by default. (For more information, see the “Startup” section in the LXPM documentation compatible with your server at https://pubs.lenovo.com/lxpm-overview/.) You can perform drive diagnostics from this interface. From the Diagnostic page, click **Run Diagnostic → Disk Drive Test**.

2. If the drive passes the test, replace the backplane.
3. If the drive fails the test, replace the drive.

Yellow drive status LED does not represent actual state of associated drive

Complete the following steps until the problem is solved:

1. Turn off the server.
2. Reseat the SAS/SATA adapter.
3. Reseat the backplane signal cable and backplane power cable.
4. Reseat the drive.
5. Power on the server and observe the activity of the drive LEDs.

U.3 NVMe drive can be detected in NVMe connection, but cannot be detected in Tri-mode

In Tri-mode, NVMe drives are connected via a PCIe x1 link to the controller. To support Tri-mode with U.3 NVMe drives, **U.3 x1 mode** must be enabled for the selected drive slots on the backplane through the XCC Web GUI. By default, the backplane setting is **U.2 x4 mode**.

Complete the following steps to enable **U.3 x1 mode**:

1. Log into the XCC Web GUI, and choose **Storage → Detail** from the navigation tree on the left.
2. In the window that is displayed, click the icon next to **Backplane**.
3. In the dialog box that is displayed, select the target drive slots and click **Apply**.
4. Do a DC power cycle to make the setting take effect.

USB I/O board problems

Use this information to solve problems related to the USB I/O board.

- "All or some keys on the keyboard do not work" on page 395
- "Mouse does not work" on page 396
- "USB-device (including hypervisor OS installation USB device) does not work" on page 396

All or some keys on the keyboard do not work

1. Make sure that:
   - The keyboard cable is securely connected.
   - The server and the monitor are turned on.
2. If you are using a USB keyboard and it is connected to a USB hub, disconnect the keyboard from the hub and connect it directly to the server.
3. Replace the keyboard.
4. If the methods above do not work, plug the USB keyboard to the front, internal or rear USB port(s).
   - If the USB keyboard does not work plugging to front USB ports but works plugging to the internal port, replace the front IO module. Refer to ***Internal Cable Routing Guide*** for more cable routing information.
   - If the USB keyboard does not work plugging to the internal USB port but works plugging to the rear ports, replace the USB I/O board. Refer to "USB I/O board replacement" on page 338 for more information.
   - If the USB keyboard does not work plugging to front, internal or rear USB port(s), replace the system I/O board. Refer to "System board assembly replacement (trained technician only)" on page 312 for more information.

Mouse does not work

1. Make sure that:
   - The mouse cable is securely connected to the server.
   - The mouse device drivers are installed correctly.
   - The server and the monitor are turned on.
   - The mouse option is enabled in the Setup Utility.
2. If you are using a USB mouse and it is connected to a USB hub, disconnect the mouse from the hub and connect it directly to the server.
3. Replace the mouse.
4. If the methods above do not work, plug the USB mouse to the front, internal or rear USB port(s).
   - If the USB mouse does not work plugging to front USB ports but works plugging to the internal port, replace the front IO module. Refer to ***Internal Cable Routing Guide*** for more cable routing information.
   - If the USB mouse does not work plugging to the internal USB port but works plugging to the rear ports, replace the USB I/O board. Refer to "USB I/O board replacement" on page 338 for more information.
   - If the USB mouse does not work plugging to front, internal or rear USB port(s), replace the system I/O board. Refer to "System board assembly replacement (trained technician only)" on page 312 for more information.

USB-device (including hypervisor OS installation USB device) does not work

1. Make sure that the operating system supports USB devices.
2. If you are using a USB hub, disconnect the USB device from the hub and connect it directly to the server.
3. Replace the USB device to check the device is workable.
4. If the methods above do not work, plug the USB device to the front, internal or rear USB port(s).
   - If the USB device does not work plugging to front USB ports but works plugging to the internal port, replace the front IO module. Refer to ***Internal Cable Routing Guide*** for more cable routing information.
   - If the USB device does not work plugging to the internal USB port but works plugging to the rear ports, replace the USB I/O board. Refer to "USB I/O board replacement" on page 338 for more information.
   - If the USB device does not work plugging to front, internal or rear USB port(s), replace the system I/O board. Refer to "System board assembly replacement (trained technician only)" on page 312 for more information.

Appendix A. Getting help and technical assistance

If you need help, service, or technical assistance or just want more information about Lenovo products, you will find a wide variety of sources available from Lenovo to assist you.

On the World Wide Web, up-to-date information about Lenovo systems, optional devices, services, and support are available at:

http://datacentersupport.lenovo.com

Note: IBM is Lenovo's preferred service provider for ThinkSystem.

Before you call

Before you call, there are several steps that you can take to try and solve the problem yourself. If you decide that you do need to call for assistance, gather the information that will be needed by the service technician to more quickly resolve your problem.

Attempt to resolve the problem yourself

You can solve many problems without outside assistance by following the troubleshooting procedures that Lenovo provides in the online help or in the Lenovo product documentation. The online help also describes the diagnostic tests that you can perform. The documentation for most systems, operating systems, and programs contains troubleshooting procedures and explanations of error messages and error codes. If you suspect a software problem, see the documentation for the operating system or program.

You can find the product documentation for your ThinkSystem products at the following location:

https://pubs.lenovo.com/

You can take these steps to try to solve the problem yourself:

- Check all cables to make sure that they are connected.
- Check the power switches to make sure that the system and any optional devices are turned on.
- Check for updated software, firmware, and operating-system device drivers for your Lenovo product. (See the following links) The Lenovo Warranty terms and conditions state that you, the owner of the Lenovo product, are responsible for maintaining and updating all software and firmware for the product (unless it is covered by an additional maintenance contract). Your service technician will request that you upgrade your software and firmware if the problem has a documented solution within a software upgrade.
  - Drivers and software downloads
    - https://datacentersupport.lenovo.com/products/servers/thinksystem/sr650v4/downloads/driver-list/
  - Operating system support center
    - https://datacentersupport.lenovo.com/solutions/server-os
  - Operating system installing instructions
    - https://pubs.lenovo.com/thinksystem#os-installation
- If you have installed new hardware or software in your environment, check https://serverproven.lenovo.com to make sure that the hardware and software are supported by your product.
- Refer to Chapter 2 “Problem determination” on page 343 for instructions on isolating and solving issues.
- Go to http://datacentersupport.lenovo.com and check for information to help you solve the problem.

© Copyright Lenovo 2025

To find the Tech Tips available for your server:

1. Go to http://datacentersupport.lenovo.com and navigate to the support page for your server.
2. Click on **How To's** from the navigation pane.
3. Click **Article Type → Solution** from the drop-down menu.

   Follow the on-screen instructions to choose the category for the problem that you are having.

- Check Lenovo Data Center Forum at https://forums.lenovo.com/t5/Datacenter-Systems/ct-p/sv_eg to see if someone else has encountered a similar problem.

Gathering information needed to call Support

If you require warranty service for your Lenovo product, the service technicians will be able to assist you more efficiently if you prepare the appropriate information before you call. You can also go to http://datacentersupport.lenovo.com/warrantylookup for more information about your product warranty.

Gather the following information to provide to the service technician. This data will help the service technician quickly provide a solution to your problem and ensure that you receive the level of service for which you might have contracted.

- Hardware and Software Maintenance agreement contract numbers, if applicable
- Machine type number (Lenovo 4-digit machine identifier). Machine type number can be found on the ID label, see "Identifying the server and access the Lenovo XClarity Controller" in *User Guide* or *System Configuration Guide*.
- Model number
- Serial number
- Current system UEFI and firmware levels
- Other pertinent information such as error messages and logs

As an alternative to calling Lenovo Support, you can go to https://support.lenovo.com/servicerequest to submit an Electronic Service Request. Submitting an Electronic Service Request will start the process of determining a solution to your problem by making the pertinent information available to the service technicians. The Lenovo service technicians can start working on your solution as soon as you have completed and submitted an Electronic Service Request.

Collecting service data

To clearly identify the root cause of a server issue or at the request of Lenovo Support, you might need collect service data that can be used for further analysis. Service data includes information such as event logs and hardware inventory.

Service data can be collected through the following tools:

- **Lenovo XClarity Provisioning Manager**

  Use the Collect Service Data function of Lenovo XClarity Provisioning Manager to collect system service data. You can collect existing system log data or run a new diagnostic to collect new data.

- **Lenovo XClarity Controller**

  You can use the Lenovo XClarity Controller web interface or the CLI to collect service data for the server. The file can be saved and sent to Lenovo Support.

  – For more information about using the web interface to collect service data, see the "Backing up the BMC configuration" section in the XCC documentation compatible with your server at https://pubs.lenovo.com/lxcc-overview/.

  - For more information about using the CLI to collect service data, see the “XCC `servicelog` command” section in the XCC documentation compatible with your server at https://pubs.lenovo.com/lxcc-overview/.

- **Lenovo XClarity Administrator**

  Lenovo XClarity Administrator can be set up to collect and send diagnostic files automatically to Lenovo Support when certain serviceable events occur in Lenovo XClarity Administrator and the managed endpoints. You can choose to send diagnostic files to Lenovo Support using Call Home or to another service provider using SFTP. You can also manually collect diagnostic files, open a problem record, and send diagnostic files to the Lenovo Support.

  You can find more information about setting up automatic problem notification within the Lenovo XClarity Administrator at https://pubs.lenovo.com/lxca/admin_setupcallhome.

- **Lenovo XClarity Essentials OneCLI**

  Lenovo XClarity Essentials OneCLI has inventory application to collect service data. It can run both in-band and out-of-band. When running in-band within the host operating system on the server, OneCLI can collect information about the operating system, such as the operating system event log, in addition to the hardware service data.

  To obtain service data, you can run the `getinfor` command. For more information about running the `getinfor`, see https://pubs.lenovo.com/lxce-onecli/onecli_r_getinfor_command.

Contacting Support

You can contact Support to obtain help for your issue.

You can receive hardware service through a Lenovo Authorized Service Provider. To locate a service provider authorized by Lenovo to provide warranty service, go to https://datacentersupport.lenovo.com/serviceprovider and use filter searching for different countries. For Lenovo support telephone numbers, see https://datacentersupport.lenovo.com/supportphonelist for your region support details.

Appendix B. Documents and supports

This section provides handy documents, driver and firmware downloads, and support resources.

Documents download

This section provides introduction and download link for handy documents.

Documents

Download the following product documentations at:

https://pubs.lenovo.com/sr650-v4/pdf_files

- ***Rail Installation Guides***
  - Rail installation in a rack
- ***CMA Installation Guide***
  - Cable management arm (CMA) installation in a rack
- ***User Guide***
  - Complete overview, system configuration, hardware components replacing, and troubleshooting.

    Selected chapters from *User Guide*:
    - ***System Configuration Guide* :** Server overview, components identification, system LEDs and diagnostics display, product unboxing, setting up and configuring the server.
    - ***Hardware Maintenance Guide* :** Installing hardware components, cable routing, and troubleshooting.
- ***PCIe Slot Installation Guide***
  - PCIe slot installation rules.
- ***Cable Routing Guide***
  - Cable routing information.
- ***Messages and Codes Reference***
  - XClarity Controller, LXPM, and UEFI events
- ***UEFI Manual***
  - UEFI setting introduction

Note: SR650 V4 configured with Processor Neptune Core Module or Compute Complex Neptune Core Module can be installed in the ThinkSystem Heavy Duty Full Depth Rack Cabinets. For ThinkSystem Heavy Duty Full Depth Rack Cabinets User Guide, see ThinkSystem Heavy Duty Full Depth Rack Cabinets User Guide.

Support websites

This section provides driver and firmware downloads and support resources.

Support and downloads

- Drivers and Software download website for ThinkSystem SR650 V4

© Copyright Lenovo 2025

  - https://datacentersupport.lenovo.com/products/servers/thinksystem/sr650v4/downloads/driver-list/
- Lenovo Data Center Forum
  - https://forums.lenovo.com/t5/Datacenter-Systems/ct-p/sv_eg
- Lenovo Data Center Support for ThinkSystem SR650 V4
  - https://datacentersupport.lenovo.com/products/servers/thinksystem/sr650v4
- Lenovo License Information Documents
  - https://datacentersupport.lenovo.com/documents/lnvo-eula
- Lenovo Press website (Product Guides/Datasheets/White papers)
  - http://lenovopress.com/
- Lenovo Privacy Statement
  - https://www.lenovo.com/privacy
- Lenovo Product Security Advisories
  - https://datacentersupport.lenovo.com/product_security/home
- Lenovo Product Warranty Plans
  - http://datacentersupport.lenovo.com/warrantylookup
- Lenovo Server Operating Systems Support Center website
  - https://datacentersupport.lenovo.com/solutions/server-os
- Lenovo ServerProven website (Options compatibility lookup)
  - https://serverproven.lenovo.com
- Operating System Installation Instructions
  - https://pubs.lenovo.com/thinksystem#os-installation
- Submit an eTicket (service request)
  - https://support.lenovo.com/servicerequest
- Subscribe to Lenovo Data Center Group product notifications (Stay up to date on firmware updates)
  - https://datacentersupport.lenovo.com/solutions/ht509500

Appendix C. Notices

Lenovo may not offer the products, services, or features discussed in this document in all countries. Consult your local Lenovo representative for information on the products and services currently available in your area.

Any reference to a Lenovo product, program, or service is not intended to state or imply that only that Lenovo product, program, or service may be used. Any functionally equivalent product, program, or service that does not infringe any Lenovo intellectual property right may be used instead. However, it is the user's responsibility to evaluate and verify the operation of any other product, program, or service.

Lenovo may have patents or pending patent applications covering subject matter described in this document. The furnishing of this document is not an offer and does not provide a license under any patents or patent applications. You can send inquiries in writing to the following:

Lenovo (United States), Inc.
8001 Development Drive
Morrisville, NC 27560
U.S.A.
Attention: Lenovo Director of Licensing

LENOVO PROVIDES THIS PUBLICATION “AS IS” WITHOUT WARRANTY OF ANY KIND, EITHER EXPRESS OR IMPLIED, INCLUDING, BUT NOT LIMITED TO, THE IMPLIED WARRANTIES OF NON-INFRINGEMENT, MERCHANTABILITY OR FITNESS FOR A PARTICULAR PURPOSE. Some jurisdictions do not allow disclaimer of express or implied warranties in certain transactions, therefore, this statement may not apply to you.

This information could include technical inaccuracies or typographical errors. Changes are periodically made to the information herein; these changes will be incorporated in new editions of the publication. Lenovo may make improvements and/or changes in the product(s) and/or the program(s) described in this publication at any time without notice.

The products described in this document are not intended for use in implantation or other life support applications where malfunction may result in injury or death to persons. The information contained in this document does not affect or change Lenovo product specifications or warranties. Nothing in this document shall operate as an express or implied license or indemnity under the intellectual property rights of Lenovo or third parties. All information contained in this document was obtained in specific environments and is presented as an illustration. The result obtained in other operating environments may vary.

Lenovo may use or distribute any of the information you supply in any way it believes appropriate without incurring any obligation to you.

Any references in this publication to non-Lenovo Web sites are provided for convenience only and do not in any manner serve as an endorsement of those Web sites. The materials at those Web sites are not part of the materials for this Lenovo product, and use of those Web sites is at your own risk.

Any performance data contained herein was determined in a controlled environment. Therefore, the result obtained in other operating environments may vary significantly. Some measurements may have been made on development-level systems and there is no guarantee that these measurements will be the same on generally available systems. Furthermore, some measurements may have been estimated through extrapolation. Actual results may vary. Users of this document should verify the applicable data for their specific environment.

© Copyright Lenovo 2025

Trademarks

LENOVO, THINKSYSTEM, and XCLARITY are trademarks of Lenovo.

Intel and Xeon are trademarks of Intel Corporation in the United States, other countries, or both. NVIDIA is a trademark and/or registered trademarks of NVIDIA Corporation in the U.S. and/or other countries. Microsoft and Windows are trademarks of the Microsoft group of companies. Linux is a registered trademark of Linus Torvalds. All other trademarks are the property of their respective owners. © 2023 Lenovo.

Important notes

Processor speed indicates the internal clock speed of the processor; other factors also affect application performance.

CD or DVD drive speed is the variable read rate. Actual speeds vary and are often less than the possible maximum.

When referring to processor storage, real and virtual storage, or channel volume, KB stands for 1 024 bytes, MB stands for 1 048 576 bytes, and GB stands for 1 073 741 824 bytes.

When referring to hard disk drive capacity or communications volume, MB stands for 1 000 000 bytes, and GB stands for 1 000 000 000 bytes. Total user-accessible capacity can vary depending on operating environments.

Maximum internal hard disk drive capacities assume the replacement of any standard hard disk drives and population of all hard-disk-drive bays with the largest currently supported drives that are available from Lenovo.

Maximum memory might require replacement of the standard memory with an optional memory module.

Each solid-state memory cell has an intrinsic, finite number of write cycles that the cell can incur. Therefore, a solid-state device has a maximum number of write cycles that it can be subjected to, expressed as `total bytes written` (TBW). A device that has exceeded this limit might fail to respond to system-generated commands or might be incapable of being written to. Lenovo is not responsible for replacement of a device that has exceeded its maximum guaranteed number of program/erase cycles, as documented in the Official Published Specifications for the device.

Lenovo makes no representations or warranties with respect to non-Lenovo products. Support (if any) for the non-Lenovo products is provided by the third party, not Lenovo.

Some software might differ from its retail version (if available) and might not include user manuals or all program functionality.

Electronic emission notices

When you attach a monitor to the equipment, you must use the designated monitor cable and any interference suppression devices that are supplied with the monitor.

Additional electronic emissions notices are available at:

https://pubs.lenovo.com/important_notices/

Taiwan Region BSMI RoHS declaration

單元 Unit	限用物質及其化學符號 Restricted substances and its chemical symbols					
	鉛Lead (Pb)	汞Mercury (Hg)	鎘Cadmium (Cd)	六價鉻 Hexavalent chromium (Cr^{+6})	多溴聯苯 Polybrominated biphenyls (PBB)	多溴二苯醚 Polybrominated diphenyl ethers (PBDE)
機架	○	○	○	○	○	○
外部蓋板	○	○	○	○	○	○
機械組合件	–	○	○	○	○	○
空氣傳動設備	–	○	○	○	○	○
冷卻組合件	–	○	○	○	○	○
內存模組	–	○	○	○	○	○
處理器模組	–	○	○	○	○	○
電纜組合件	–	○	○	○	○	○
電源供應器	–	○	○	○	○	○
儲備設備	–	○	○	○	○	○
印刷電路板	–	○	○	○	○	○

備考1. 〝超出0.1 wt %〞及〝超出0.01 wt %〞係指限用物質之百分比含量超出百分比含量基準值。

Note1 : “exceeding 0.1wt%” and “exceeding 0.01 wt%” indicate that the percentage content of the restricted substance exceeds the reference percentage value of presence condition.

備考2. 〝○〞係指該項限用物質之百分比含量未超出百分比含量基準值。

Note2 : “○”indicates that the percentage content of the restricted substance does not exceed the percentage of reference value of presence.

備考3. 〝-〞係指該項限用物質為排除項目。

Note3 : The “-“ indicates that the restricted substance corresponds to the exemption.

Taiwan Region import and export contact information

Contacts are available for Taiwan Region import and export information.

委製商/進口商名稱: 台灣聯想環球科技股份有限公司
進口商地址: 台北市南港區三重路 66 號 8 樓
進口商電話: 0800-000-702

TCO Certified

Selected models/configurations meet the requirements of TCO Certified.

Note: TCO Certified is an international third-party sustainability certification for IT products. For details, go to https://www.lenovo.com/us/en/compliance/tco/.

