MX405 MX410 MX415

Gooseneck Microphones and Accessories

The Shure miniature gooseneck microphones, MX405, MX410 and MX415, user guide.
Version: 5 (2019-J)

Table of Contents

MX405 MX410 MX415Gooseneck Microphones and Accessories **3**

General Description **3**

Features 3

Model Variations 3

Snap-Fit Windscreen **8**

Interchangeable Cartridges **9**

MX400SMP Surface Mount Preamp **9**

Accessories 10

Installation 11

MX400SMP Pin Assignments 12

DIP Switches 12

LED Logic 13

MX400DP Desktop Base **14**

Installation 15

Cable 15

MX400DP DIP Switches 16

Local Mute Control 17

Logic Mute Control (Automatic Mixing) 18

Specifications **19**

Certifications **25**

MX405 MX410 MX415
Gooseneck Microphones and Accessories

General Description

Shure MX405, MX410, and MX415 miniature gooseneck microphones are suitable for boardrooms and other sites where aesthetics are important. Permanently mount them at conference tables or lecterns using the MX400SMP surface mount, or use the MX400DP moveable desktop base, which includes a configurable mute button with logic output. Also compatible with the MX890 wireless desktop base and the ULXD8 wireless base.

Features

- Low profile, aesthetic design
- Choice of bi-color indicator or light ring
- Wide dynamic range and smooth frequency response
- RF filtering with CommShield® technology
- Logic input for external LED control

Model Variations

These gooseneck microphones are available in different lengths with a cardioid, supercardioid, or mini-shotgun cartridge and either a bi-color LED status indicator or a light ring. The 10 and 15 inch models are also available with a dualflex neck.

MX405, MX410, MX415

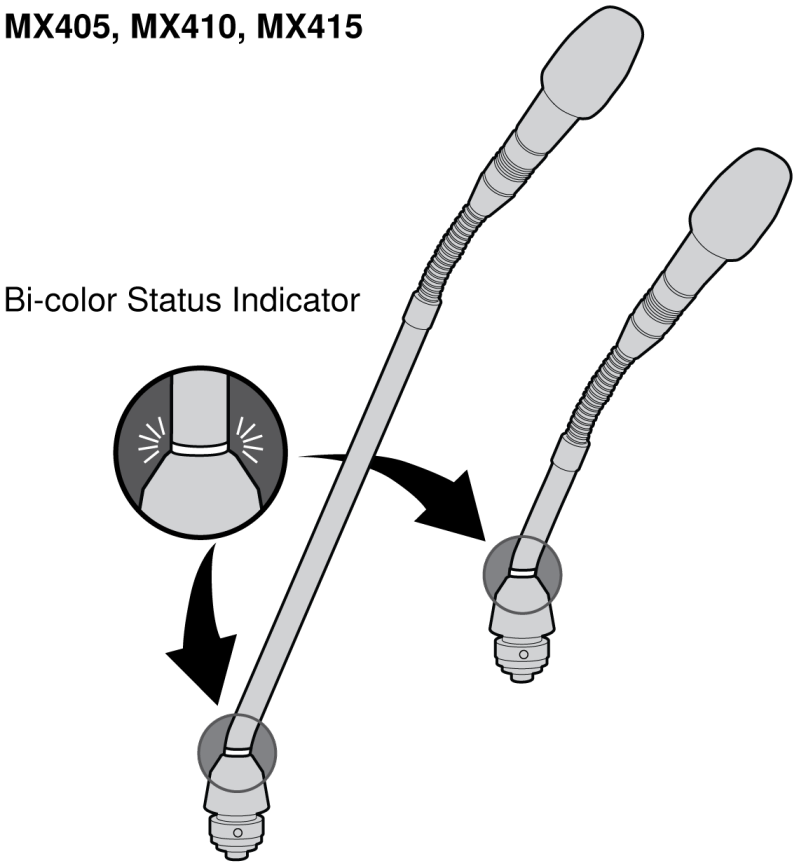

MX405R, MX410R, MX415R

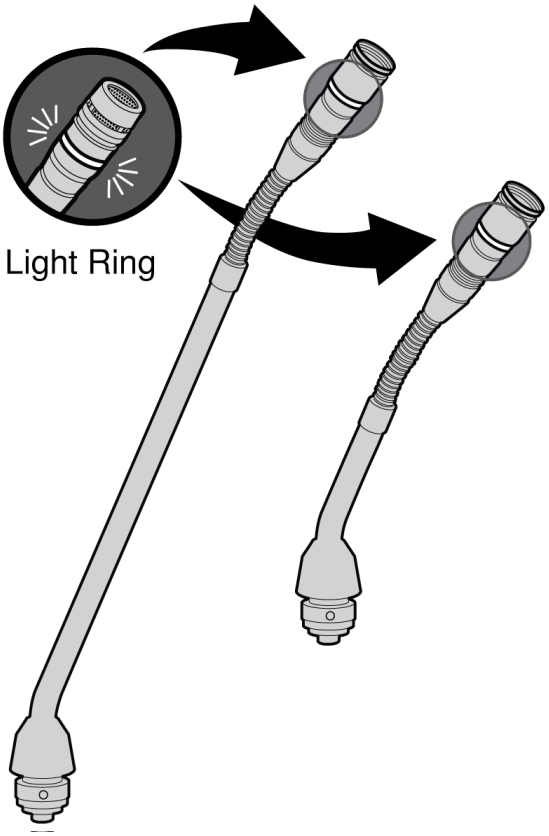

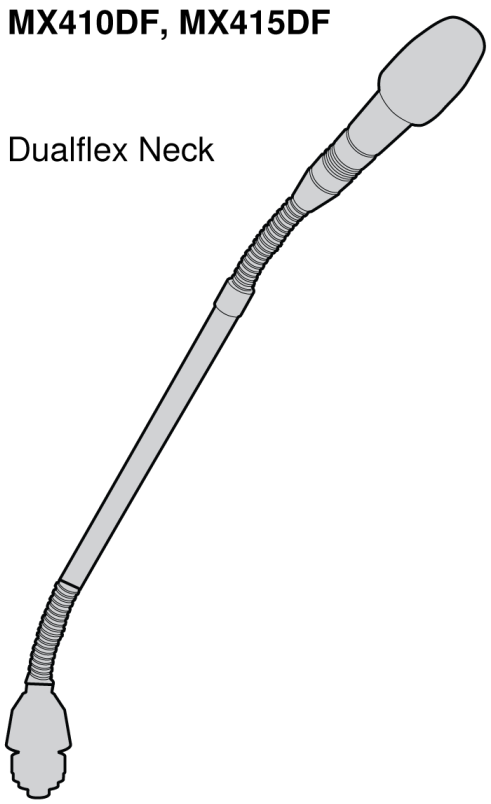

Gooseneck Microphones

5" Cardioid Gooseneck Microphone	MX405LP/C
5" Supercardioid Gooseneck Microphone	MX405LP/S
5" Mini-shotgun Gooseneck Microphone	MX405LP/MS
5" Gooseneck with Red Top LED (no cartridge)	MX405RLP/N
10" Cardioid Gooseneck Microphone	MX410LP/C
10" Supercardioid Gooseneck Microphone	MX410LP/S
10" Gooseneck with Red Top LED (no cartridge)	MX410RLP/N
10" Cardioid Dualflex Gooseneck Microphone	MX410LPDF/C
10" Supercardioid Dualflex Gooseneck Microphone	MX410LPDF/S
10" Dualflex Gooseneck with Red Top LED (no cartridge)	MX410RLPDF/N
10" Cardioid Dualflex Gooseneck Microphone with Red Top LED	MX410RLPDF/C
10" Supercardioid Dualflex Gooseneck Microphone with Red Top LED	MX410RLPDF/S
15" Cardioid Gooseneck Microphone	MX415LP/C
15" Supercardioid Gooseneck Microphone	MX415LP/S

15" Gooseneck with Red Top LED (no cartridge)	MX415RLP/N
15" Cardioid Dualflex Gooseneck Microphone	MX415LPDF/C
15" Supercardioid Dualflex Gooseneck Microphone	MX415LPDF/S
15" Dualflex Gooseneck with Red Top LED (no cartridge)	MX415RLPDF/N
15" Cardioid Dualflex Gooseneck Microphone with Red Top LED	MX415RLPDF/C
15" Supercardioid Dualflex Gooseneck Microphone with Red Top LED	MX415RLPDF/S
5" White Gooseneck Microphone (no cartridge)	MX405WLP/N
5" White Gooseneck Microphone with Red Top LED (no cartridge)	MX405WRLP/N
10" White Gooseneck Microphone (no cartridge)	MX410WLP/N
10" White Gooseneck Microphone with Red Top LED (no cartridge)	MX410WRLP/N
15" White Gooseneck Microphone (no cartridge)	MX415WLP/N
15" White Gooseneck Microphone with Red Top LED (no cartridge)	MX415WRLP/N
10" White Dualflex Gooseneck Microphone (no cartridge)	MX410WLPDF/N
10" White Dualflex Gooseneck Microphone with Red Top LED (no cartridge)	MX410WRLPDF/N
15" White Dualflex Gooseneck Microphone (no cartridge)	MX415WLPDF/N
15" White Dualflex Gooseneck Microphone with Red Top LED (no cartridge)	MX415WRLPDF/N

Coverage and Placement

- **Cardioid:** One microphone for one or two people.
- **Supercardioid:** One microphone for each person.
- **Mini-shotgun:** One microphone for each person.

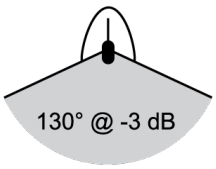

Cardioid

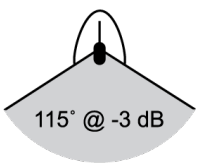

Supercardioid

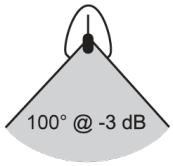

Mini-shotgun

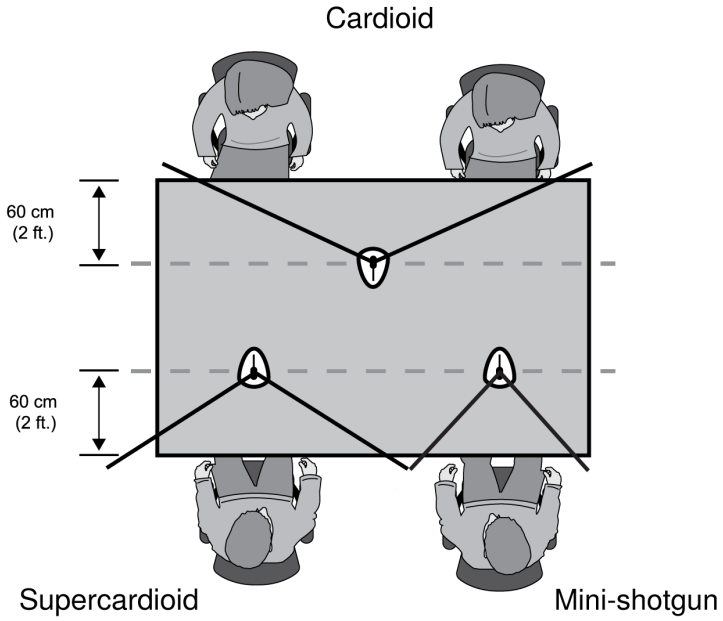

Mic Placement

Snap-Fit Windscreen

- Snap into the groove below the cartridge.
- To remove, spread the gap with a screwdriver or thumbnail.
- Provides 30 dB of "pop" protection.

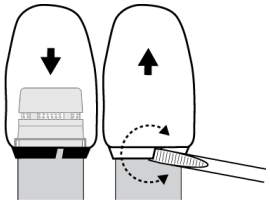

Interchangeable Cartridges

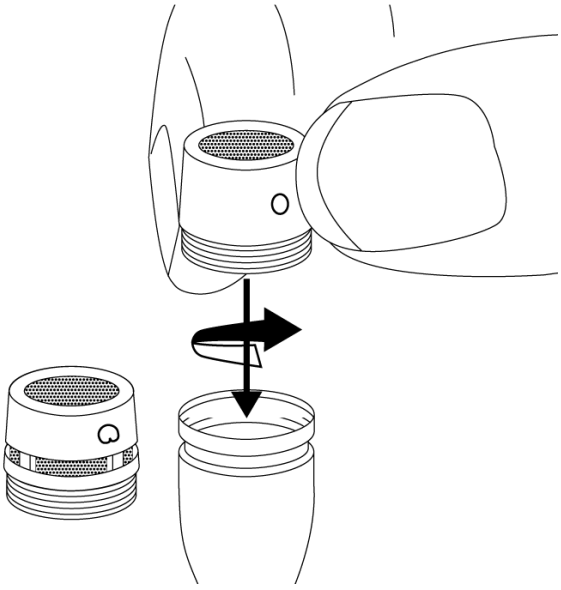

Microflex microphones use interchangeable cartridges that allow you to choose the polar pattern for different installations.

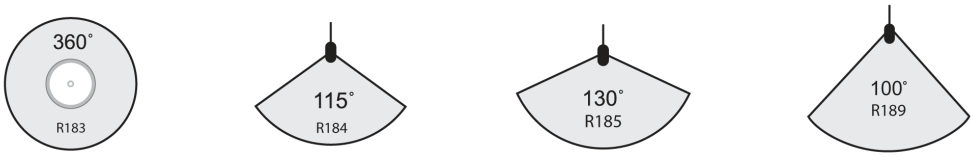

Omnidirectional | Supercardioid | Cardioid | Mini-shotgun

Cartridge Polar Patterns

MX400SMP Surface Mount Preamp

Permanent mount for conference tables or lecterns. Includes LED logic input.

Accessories

Furnished Accessories

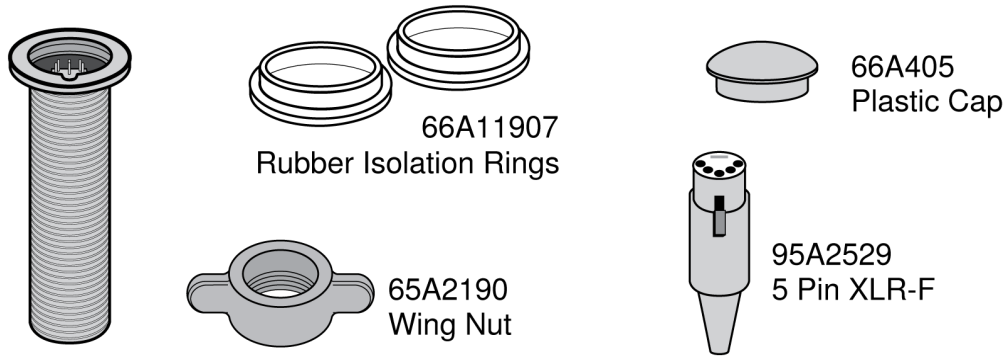

MX400SMP Surface Mount Kit

Installation

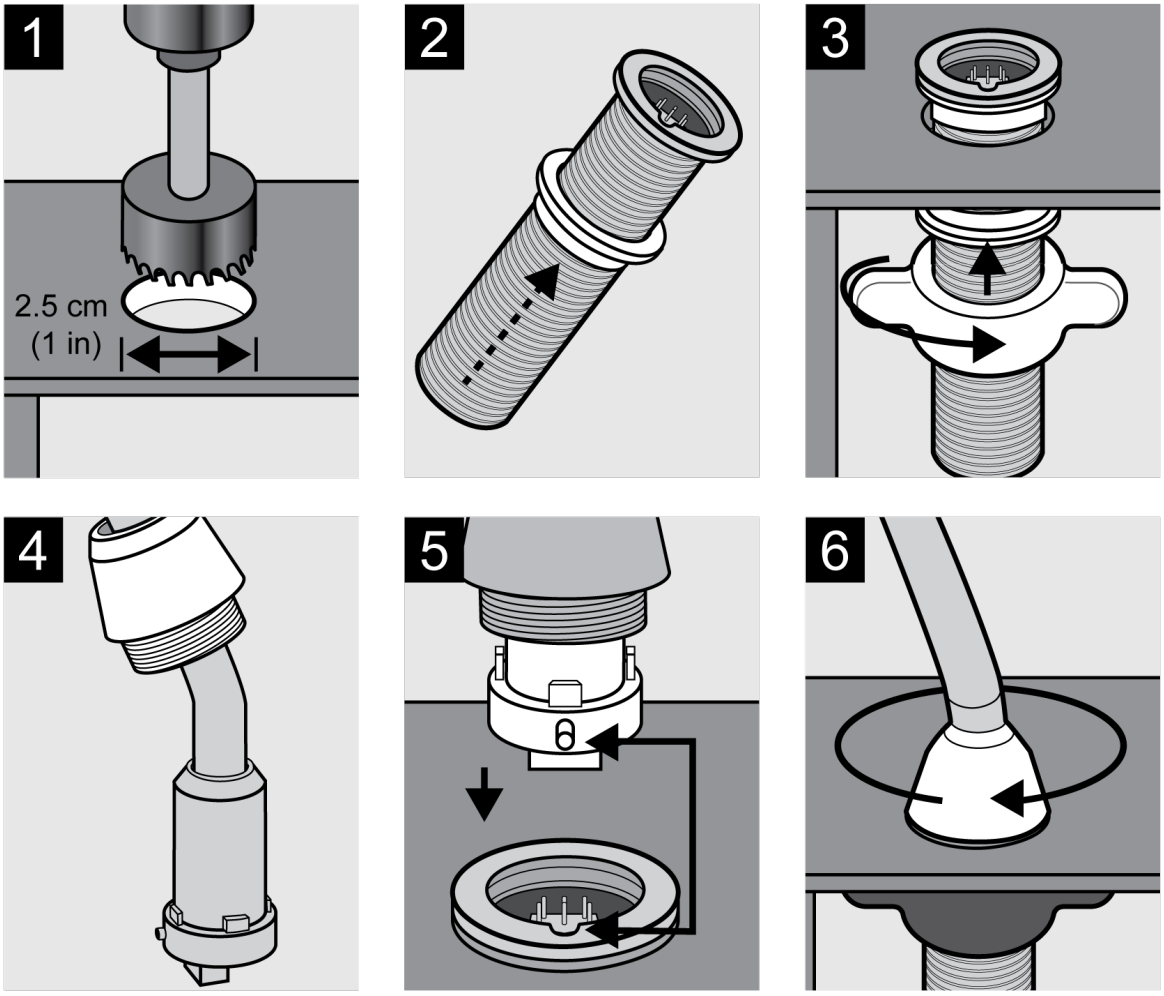

Note: *Over tightening the wing nut reduces shock isolation.*

Caution: To prevent bending pins, line up key with notch and seat connector fully before twisting to lock.

MX400SMP Pin Assignments

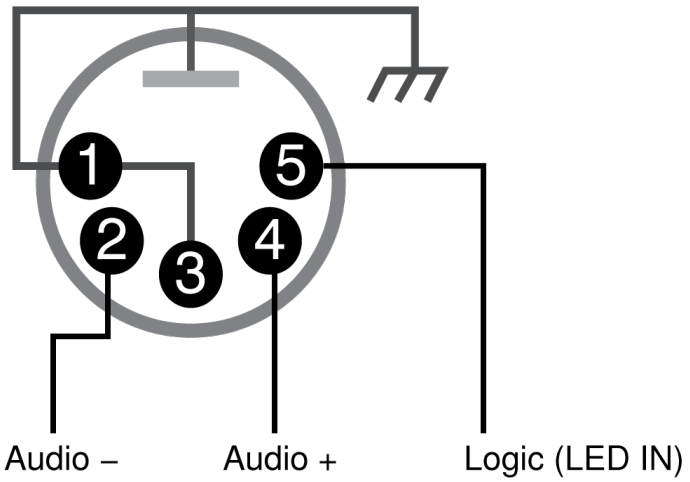

5-Pin XLR

DIP Switches

Set DIP Switch 1 up to engage the low cut filter, which attenuates frequencies by 6 dB per octave below 150 Hz.

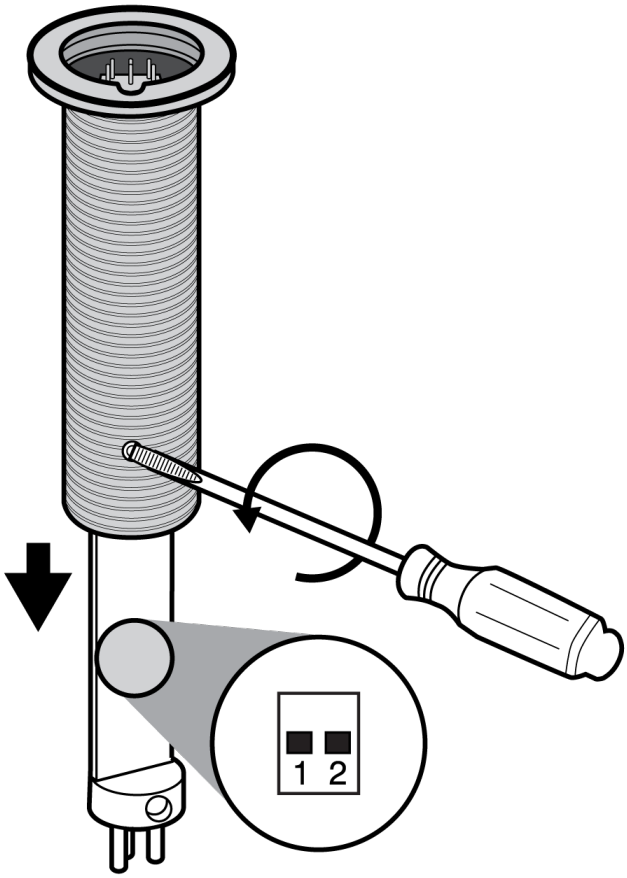

Switch	Down (default)	Up
1	Full frequency response	Low cut filter
2	LED steady	LED flashes

LED Logic

To operate the LED indicator, use the included 5-pin XLR connector to wire the microphone to an automatic mixer or other logic device.

Note: *Connect the LED IN to the gate output to illuminate the LED when the channel is gated on.*

Do not use the relay ports on Crestron and AMX devices. Use the *I/O* logic ports instead.

The LED logic may not function when connecting to devices that do not have internal "pull-up resistor" logic circuits, such as ClearOne DSP products. External pull-up resistor circuits can be added for each microphone. Visit www.shure.com/FAQ for detailed instructions.

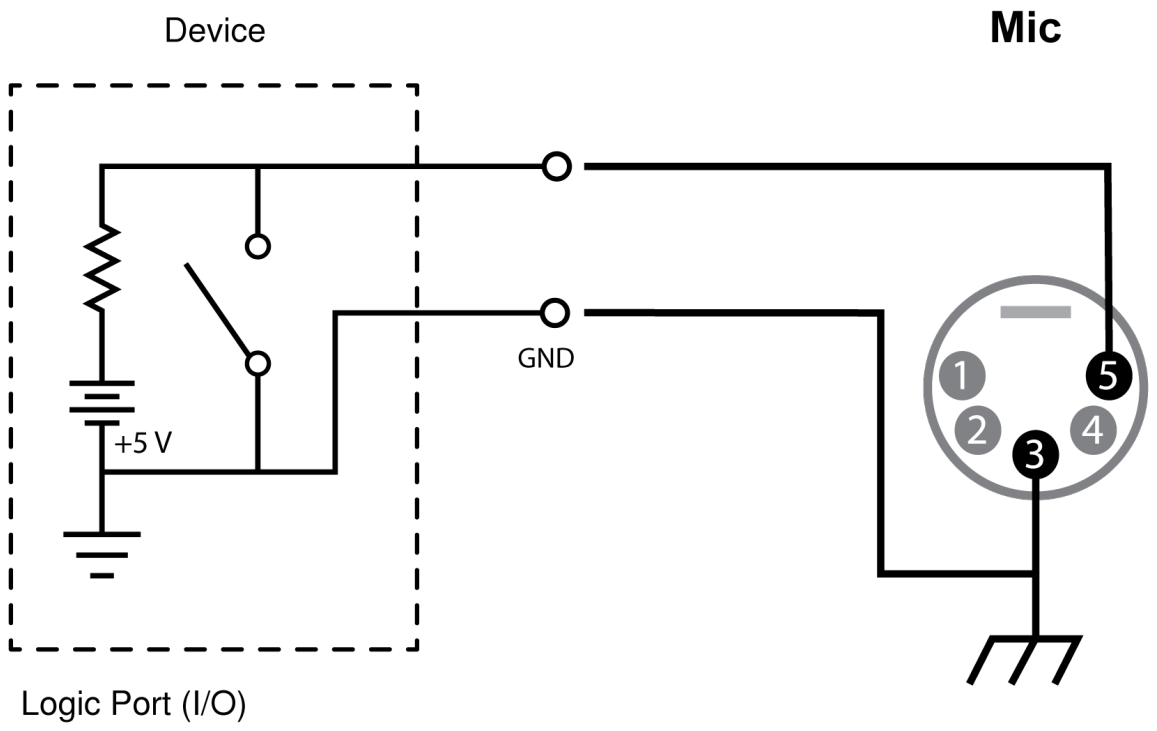

Logic Connection

Connection to device with internal "pull-up resistor" logic circuit

MX405, 410, 415	
Logic LOW (0 V)	Logic HIGH (+5 V)

MX405, 410, 415	
	
Green	Red
MX405R, 410R, 415R	
Logic LOW (0 V)	Logic HIGH (+5V)
	
Red	Off/flashing

MX400DP Desktop Base

The MX400DP moveable desktop base includes a configurable mute button with logic output.

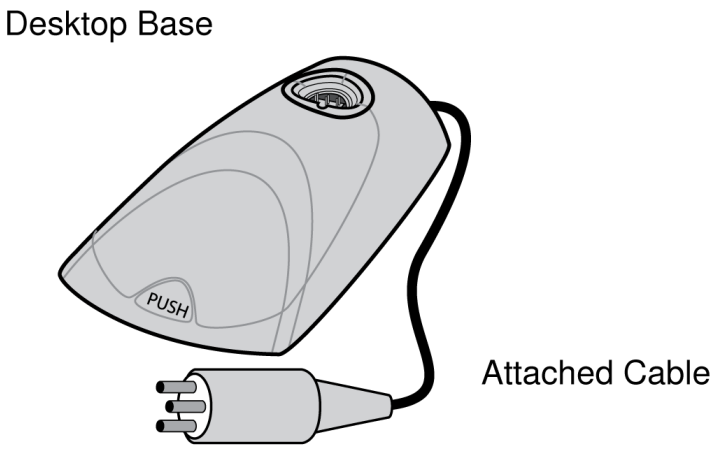

MX400DP Desktop Base

Installation

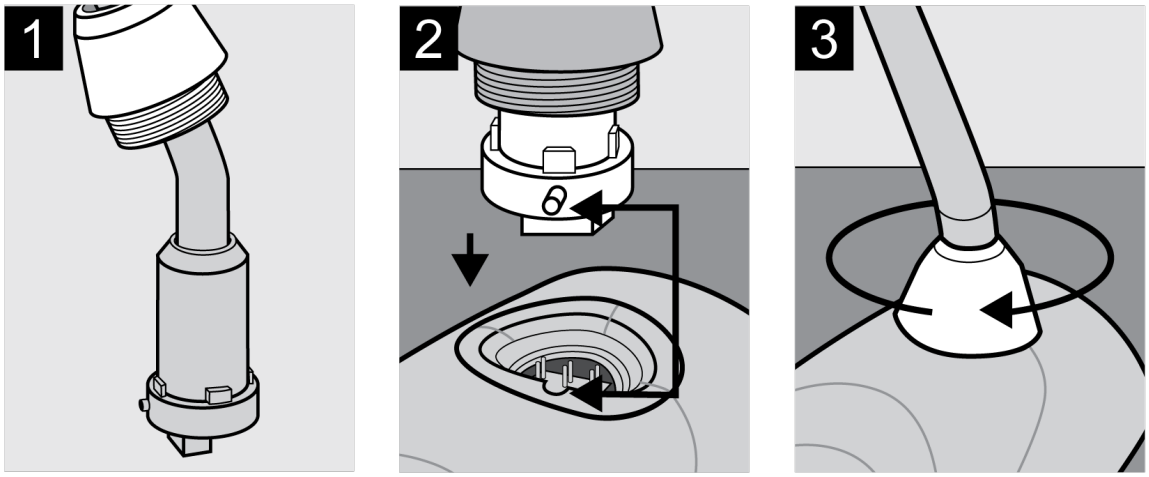

Caution: To prevent bending pins, line up key with notch and seat connector fully before twisting to lock.

Cable

The 20 ft. attached cable is terminated with a 3-pin XLR connector. For logic applications, open the XLR connector to access the three unterminated logic conductors.

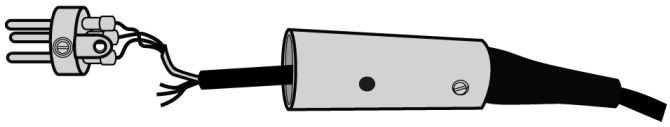

Wire Color	Function
Red	Audio +
Black	Audio −
White	SWITCH OUT
Orange	LED IN
Green	Logic Ground
Shield	Mic Common Ground

MX400DP Pin Assignments

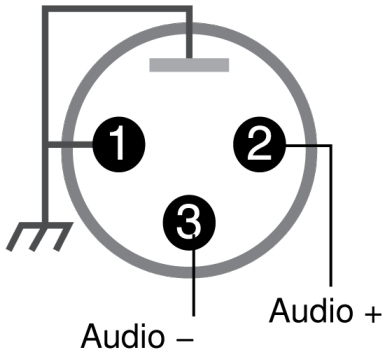

3-Pin XLR

MX400DP DIP Switches

Caution: Failure to reinstall the setscrew will reduce RF immunity.

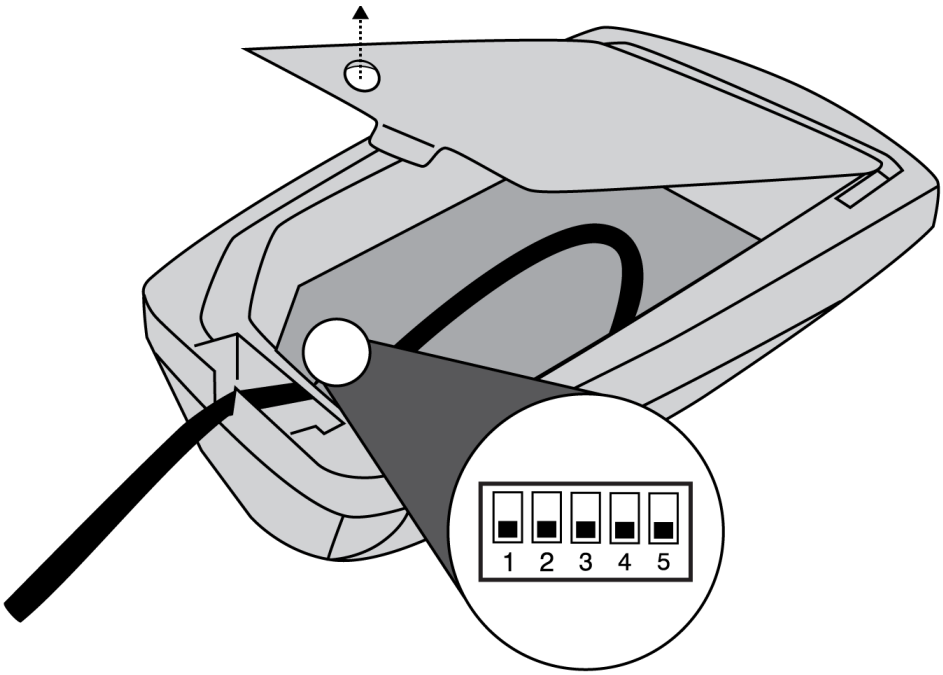

Switch	Down (default)	Up
1	Momentary	Toggle
2	Push-to-Mute	Push-to-Talk
3	Local Mute	Logic Control

Switch	Down (default)	Up
4	Full Frequency Range	Low Cut Filter (attenuates 6 dB per octave below 150 Hz)
5	LED Steady	LED Flashes

Local Mute Control

The microphone ships configured for local (manual) mute control (**DIP Switch 3 down**). In this mode, the *PUSH* button on the microphone mutes the audio signal at the microphone. Audio is not sent to the audio outputs when muted.

In this configuration, the LED color reflects the microphone state, as controlled by the user with the *PUSH* button.

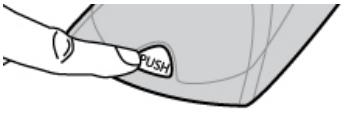

Microphone Status	MX405, 410, 415 	MX405R, 410R, 415R 
Active	Green	Red
Muted	Red	Off/flashing

Button Configuration

For local mute control operation, use DIP Switches 1 and 2 to configure the button behavior.

Button Behavior	SWITCH OUT Logic Signal	DIP Switch Setting
Momentary: push-to-mute (as shipped).	When pushed, SWITCH OUT (red wire) falls to 0 V. When released, SWITCH OUT returns to +5 V.	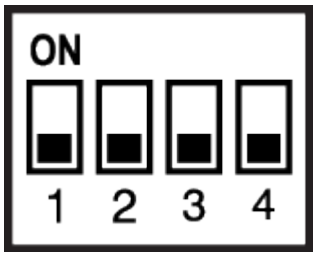
Momentary: push-to-talk		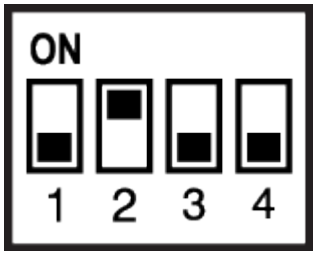

Button Behavior	SWITCH OUT Logic Signal	DIP Switch Setting
Toggle: Push and release to toggle the microphone on or off. Mic is active when powered on.	Push and release sets SWITCH OUT to 0 V. Push again to toggle back to +5 V.	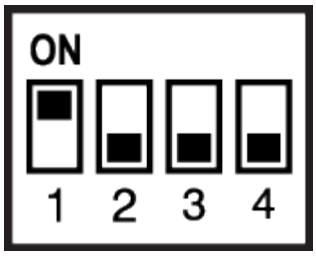
Toggle: Push and release to toggle the microphone on or off. Mic is mute when powered on		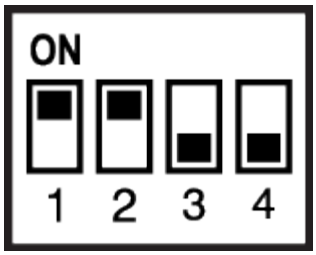

Logic Mute Control (Automatic Mixing)

Set **DIP Switch 3 up** to configure the microphone for logic control applications where audio from the microphone is muted by an external device, such as an automatic mixer. In this mode, the local mute function of the *PUSH* button is bypassed (the microphone always sends audio) and the LED does not respond directly from pushing the button.

As required by the installation specifications, wire the SWITCH OUT conductor in the microphone cable to the automatic mixer or other TTL logic device. When the talker presses the button on the microphone, it changes the voltage level at the SWITCH OUT conductor, which signals the device to mute audio for that channel or perform some other function.

To control the LED on the microphone, wire the LED IN conductor to the gate output on the automatic mixer (or any TTL logic device).

Button Configuration

For logic control operation, DIP Switch 1 determines the button behavior (DIP Switch 2 has no effect).

Button Behavior	DIP Switch Setting
Momentary: When pushed, SWITCH OUT (red wire) falls to 0 V. When released, SWITCH OUT returns to +5 V.	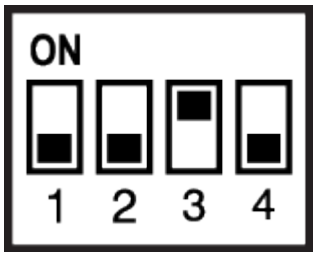
Toggle: Push and release sets SWITCH OUT to 0 V. Push again to toggle back to +5 V.	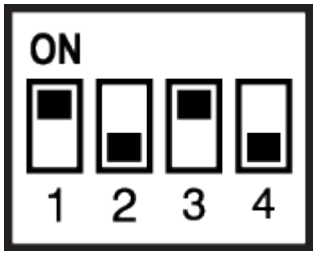

Controlling the LED Using Logic LED IN

When configured for logic mute control, connect the LED IN conductors to an external switch, relay, or a TTL gate (gate out) on an automatic mixer. The MX400DB contains an internal pull-up resistor circuit.

- The LED illuminates **green/red** when the MX396 LED IN is **grounded** (orange wire connected to the green wire).
- The LED illuminates **red/off** when LED IN is **lifted** (orange wire is NOT connected to the green wire).

Specifications

Type

Electret Condenser

Frequency Response

50–17000 Hz

Polar Pattern

MX405/C, MX410/C, MX415/C	Cardioid
MX405/S, MX410/S, MX415/S	Supercardioid
MX405/MS	Mini-shotgun

Output Impedance

170 Ω

Output Configuration

Active Balanced

Sensitivity

@ 1 kHz, open circuit voltage

Cardioid	−35 dBV/Pa (18 mV)
Supercardioid	−34 dBV/Pa (21 mV)
Mini-shotgun	-33 dBV/Pa (22 mV)

1 Pa=94 dB SPL

Maximum SPL

1 kHz at 1% THD, 1 kΩ load

Cardioid	121 dB
Supercardioid	120 dB
Mini-shotgun	121 dB

Self Noise

A-weighted

Cardioid	28 dB SPL

Supercardioid	27 dB SPL
Mini-shotgun	26 dB SPL

Signal-to-Noise Ratio

Ref. 94 dB SPL at 1 kHz

Cardioid	66 dB
Supercardioid	68 dB
Mini-shotgun	68 dB

Dynamic Range

1 kΩ load, @ 1 kHz

93 dB

Common Mode Rejection

10 to 100,000 kHz

45 dB, minimum

Clipping Level

at 1% THD

−8 dBV (0.4 V)

Polarity

3-pin XLR	Positive sound pressure on diaphragm produces positive voltage on pin 2 relative to pin 3 of output XLR connector
5-pin XLR	Positive sound pressure on diaphragm produces positive voltage on pin 4 relative to pin 2 of output XLR connector

Weight

MX405	0.054 kg (0.119 lbs)
MX410	0.068 kg (0.150 lbs)
MX415	0.07 kg (0.154 lbs)
MX400DP	0.516 kg (1.138 lbs)
MX400SMP	0.125 kg (0.275 lbs)

Logic Connections

LED IN	Active low (≤1.0V), TTL compatible. Absolute maximum voltage: -0.7V to 50V.
LOGIC OUT	Active low (≤1.0V), sinks up to 20mA, TTL compatible. Absolute maximum voltage: -0.7V to 50V (up to 50V through 3kΩ).

Mute Switch Attenuation

-50 dB minimum

Cable

MX400DP

6.1 m (20 ft) attached cable with shielded audio pair terminated at a 3-pin male XLR and three unterminated conductors for logic control

Environmental Conditions

Operating Temperature	–18–57°C (0–135°F)
Storage Temperature	–29–74°C (–20–165°F)
Relative Humidity	0–95%

Power Requirements

Phantom Power

48–52 V DC, 8.0 mA

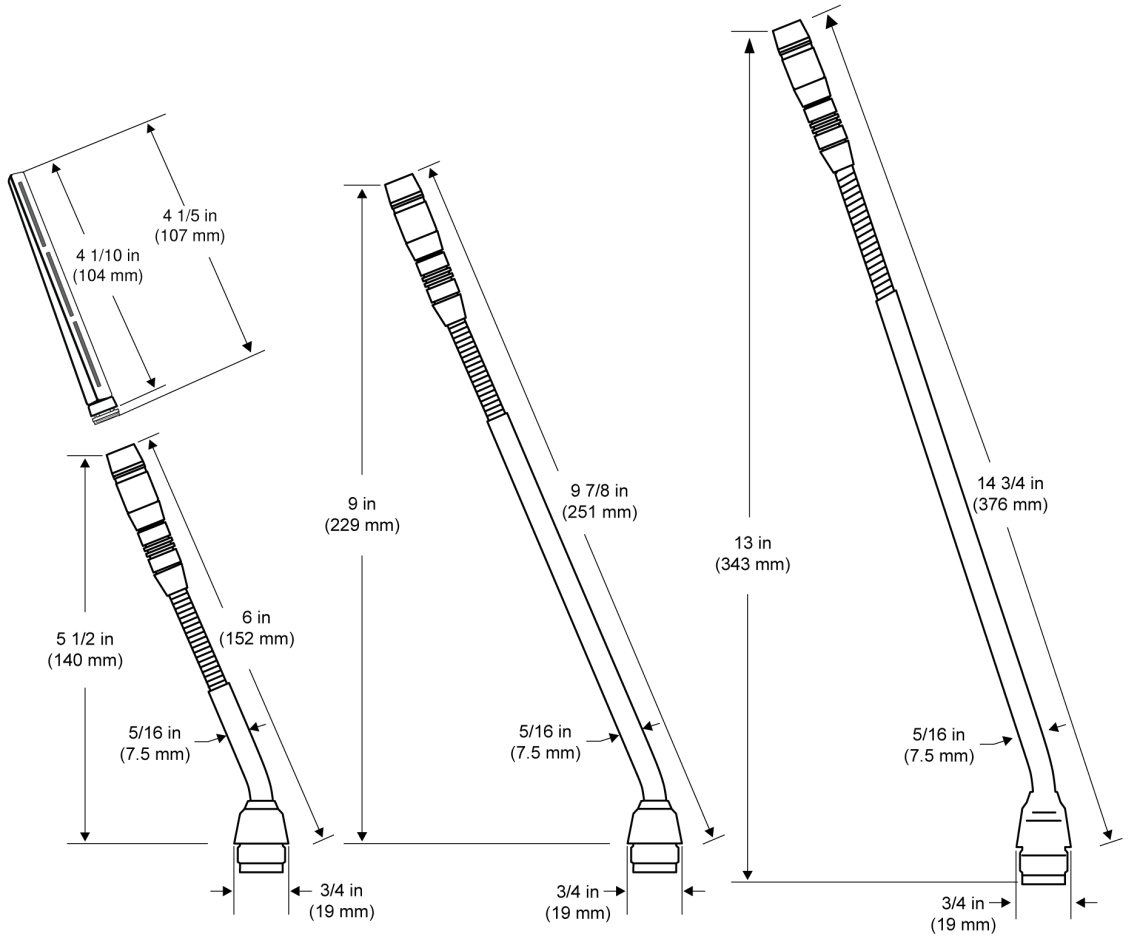

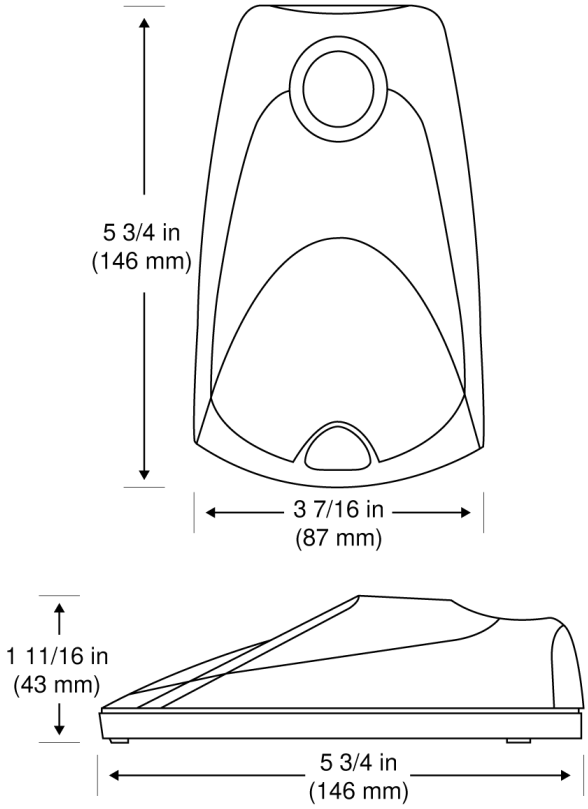
5 3/4 in
(146 mm)
3 7/16 in
(87 mm)
1 11/16 in
(43 mm)
5 3/4 in
(146 mm)

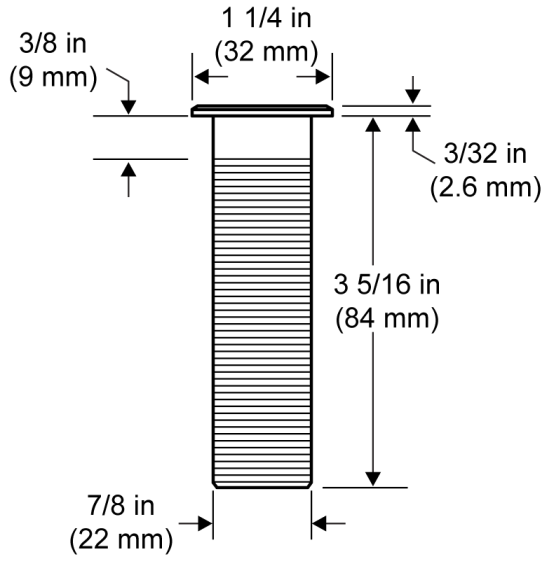
1 1/4 in
(32 mm)
3/8 in
(9 mm)
3/32 in
(2.6 mm)
3 5/16 in
(84 mm)
7/8 in
(22 mm)

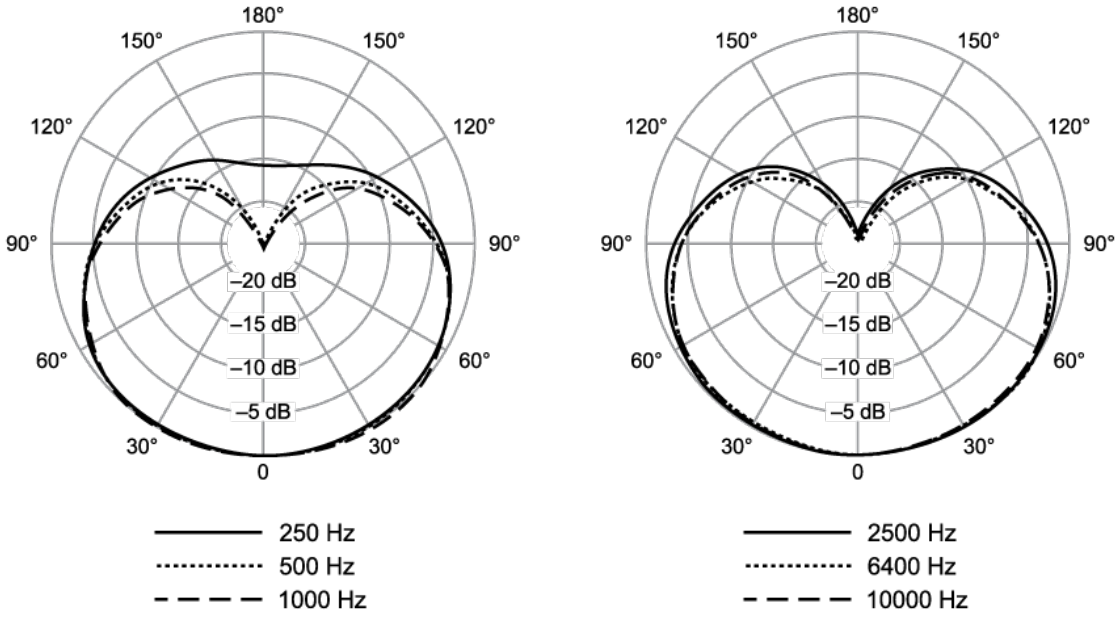

Cardioid

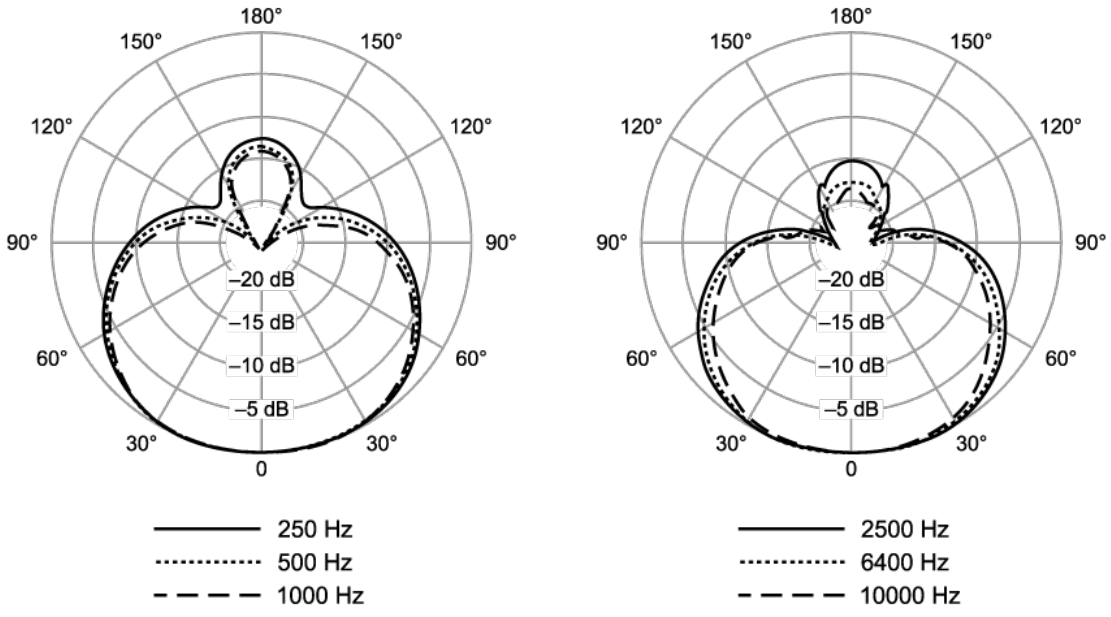

Supercardioid

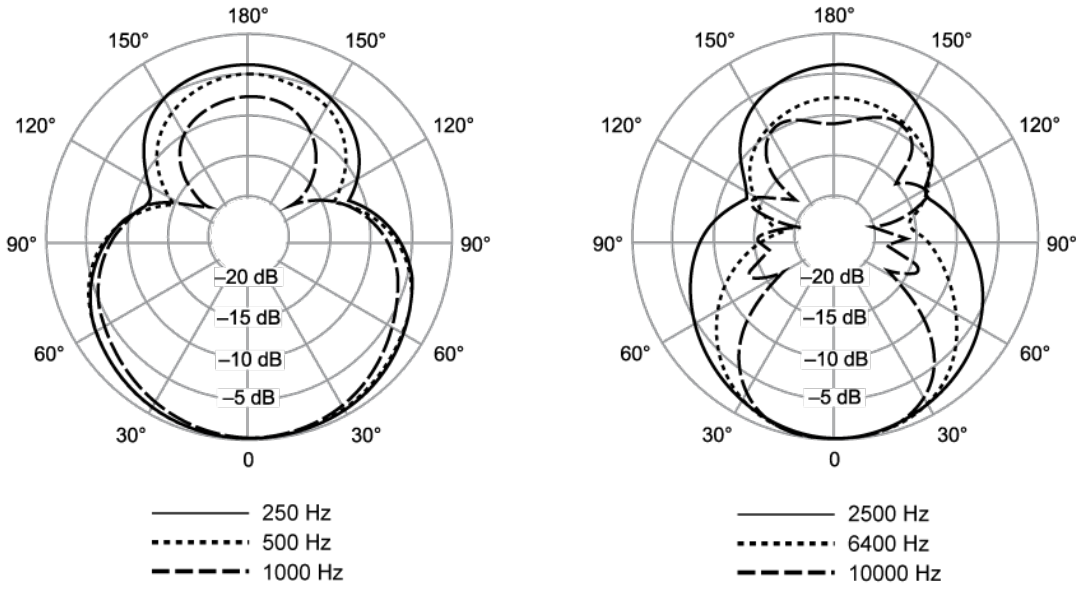

Mini-shotgun

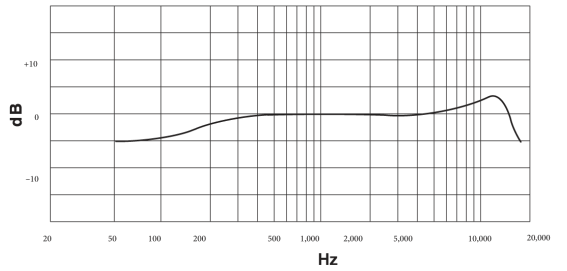

CARDIOID

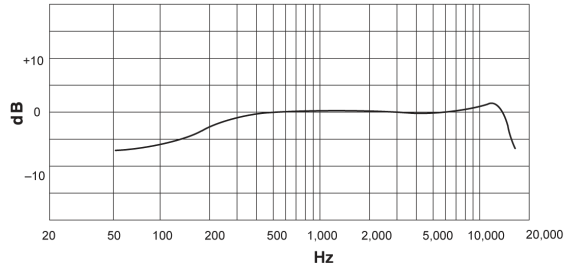

SUPERCARDIOID

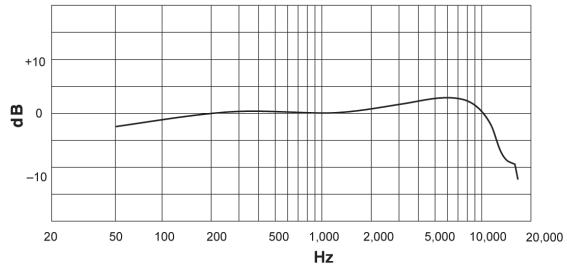

MINI-SHOTGUN

TYPICAL FREQUENCY RESPONSE

Certifications

This product meets the Essential Requirements of all relevant European directives and is eligible for CE marking.

The CE Declaration of Conformity can be obtained from: www.shure.com/europe/compliance

Authorized European representative:
Shure Europe GmbH
Headquarters Europe, Middle East & Africa
Department: EMEA Approval
Jakob-Dieffenbacher-Str. 12
75031 Eppingen, Germany
Phone: +49-7262-92 49 0
Fax: +49-7262-92 49 11 4
Email: info@shure.de