Juniper Networks | Engineering Simplicity

CTP2000 Hardware Documentation

Published
2023-06-20

Juniper Networks, Inc.
1133 Innovation Way
Sunnyvale, California 94089
USA
408-745-2000
www.juniper.net

Juniper Networks, the Juniper Networks logo, Juniper, and Junos are registered trademarks of Juniper Networks, Inc. in the United States and other countries. All other trademarks, service marks, registered marks, or registered service marks are the property of their respective owners.

Juniper Networks assumes no responsibility for any inaccuracies in this document. Juniper Networks reserves the right to change, modify, transfer, or otherwise revise this publication without notice.

CTP2000 Hardware Documentation
Copyright © 2023 Juniper Networks, Inc. All rights reserved.

The information in this document is current as of the date on the title page.

YEAR 2000 NOTICE

Juniper Networks hardware and software products are Year 2000 compliant. Junos OS has no known time-related limitations through the year 2038. However, the NTP application is known to have some difficulty in the year 2036.

END USER LICENSE AGREEMENT

The Juniper Networks product that is the subject of this technical documentation consists of (or is intended for use with) Juniper Networks software. Use of such software is subject to the terms and conditions of the End User License Agreement ("EULA") posted at https://support.juniper.net/support/eula/. By downloading, installing or using such software, you agree to the terms and conditions of that EULA.

Table of Contents

About This Guide | viii

1 **Overview**

CTP2000 Series Platform Overview | 2

Introducing CTP Series Platforms | **2**

CTP2000 Series Processor | **2**

CTP2008 Platform | **3**

CTP2024 Platform | **6**

CTP2056 Platform | **9**

CTP2000 Series Interface Modules | 13

CTP2000 Serial Interface Modules | **13**

CTP2000 T1/E1 Interface Module | **14**

CTP2000 Compression Module | **15**

CTP2000 4WE&M Interface Module | **16**

CTP2000 2W-FXS and 2W-FXO Interface Modules | **24**

CTP2000 8P-IRIG Interface Module | **31**

CTP2000 Clock Interface Modules | **32**

CTP2000 Multiservice Interface Module | **35**

CTP2000 PMC Module | **36**

2 **Planning**

System Specifications | 39

CTP2008 Platform Specifications and Certification | **39**

CTP2024 Platform Specifications and Certification | **42**

CTP2056 Platform Specifications and Certification | **45**

Planning and Preparing the Site | 49

Before You Install a CTP Platform | 49

CTP2000 Environmental Requirements | 49

Equipment Rack Requirements | 51

CTP2000 Rack Requirements | 51

CTP2000 Mechanical Requirements | 52

CTP2000 Space Requirements | 52

CTP2000 Rack Installation | 53

CTP Cabling Recommendations | 53

Cable and Pinout Specifications | 55

CTP2000 4WE&M Interface Connector Pinouts | 55

CTP2000 FXS and FXO Interface Module Cables and Pinouts | 59

T1/E1 Interface Module Pinouts | 63

CTP2000 Serial Interface Module Pinouts | 64

CTP2000 Series Console Cable Pinouts | 79

CTP Fast Ethernet and Power Cables | 85

Terminal Block and Circuit Breaker Specifications | 85

3 **Safety**

General Safety Guidelines and Warnings | 89

CTP Safety Guidelines and Warnings | 89

Module Installation Safety Guidelines and Warnings | 91

Safety Guidelines and Warnings for Installing CTP Modules | 91

Hardware Compliance | 93

Declaration of Conformity for CTP2000 Platforms | 93

Federal Communications Commission (FCC) Statement | 95

FCC Requirements for Consumer Products | 95

Food and Drug Administration, Center for Devices and Radiological Health | 96

Compliance with Canadian Regulations | 96

Statements of Volatility for Juniper Network Devices | 99

4 Installation

Unpacking and Inspecting the CTP Platform | 105

Before You Unpack the CTP Platform | 105

Unpacking the CTP Device | 105

Inspecting Platform Components and Accessories | 106

If You Detect or Suspect Damage | 107

Contacting Juniper Networks | 107

Installing the Chassis | 108

Before You Install the CTP2000 Platform | 108

Installing the CTP2000 Platform in Freestanding Mode | 109

Special Guidelines for Installing CTP2056 Chassis in a Rack | 109

Installing the CTP2000 Platform in a Rack | 110

Installing Modules | 111

CTP2000 Modules Installation Overview | 111

Protecting CTP2000 Modules and Slots | 112

Required Tools and Safety Items for Installing CTP Modules | 113

Installing a CTP Interface Module, Processor Module, or Clock Module | 113

Removing a CTP Interface Module, Processor Module, or Clock Module | 114

Installing or Removing a CTP2000 Series CompactFlash Card | 115

Installing a PMC on CTP2000 Platforms | 117

Installing and Removing SFPs in a CTP Module | 120

Installing SFPs in a CTP2000 Module | 120

Removing SFPs in a CTP2000 Module | 122

Upgrading Components for Memory Upgrades | 124

Upgrading CTP2000 Series Components for Memory Upgrades | 124

Cabling | 126

Cabling the CTP2000 Platform Overview | **126**

Required Tools, Wires, and Cables for the CTP2000 Platform | **127**

CTP2000 Management Ports | **128**

Cabling a CTP2000 T1/E1 Interface Module | **129**

Cabling the CTP Platform for DC Power | **129**

- Task 1: Turning Off All CTP Platform Power | **130**
- Task 2: Connecting the Grounding Cable to the CTP Platform (CTP2056 Platform Only) | **130**
- Task 3: Connecting the Power Cables to the CTP2000 Platform | **131**

Powering On | 133

Before You Power On the CTP2000 Platform | **133**

Powering On the CTP2000 Platform | **134**

Powering Off the CTP Platform | **140**

Accessing the CTP2000 Platform | 141

Setting Up Management Access on the CTP2000 Platform | **141**

CTP2000 Console Port Setup | **142**

Using HyperTerminal with the CTP2000 Platform | **143**

Connecting Directly to the CTP2000 Platform | **144**

CTP2000 Platform SSH Setup | **144**

5 **Maintenance**

Maintaining Components | 147

Required Tools for Maintaining the CTP Platform | **147**

Storing CTP Modules and Other Components | **147**

Cleaning the CTP Platform | **148**

Replacing an AC Power Supply | **149**

Product Reclamation and Recycling | 151

Product Reclamation and Recycling Program | **151**

Replacing Fan Trays | 153

Removing a CTP2000 Fan Tray | **153**

Installing a CTP2000 Fan Tray | **153**

Packing and Returning Hardware | 155

Return Procedure | **155**

Returning CTP Products for Repair or Replacement | **156**

6 **Troubleshooting**

Troubleshooting Power Failures | 158

CTP Platform Does Not Power On | **158**

CTP Platform Shuts Down | **159**

Contacting Customer Support | 161

Contacting Customer Support | **161**

Locating CTP Component Serial Numbers | **162**

Information You Might Need to Supply to JTAC | **162**

About This Guide

This page contains the latest CTP2000 Series Circuit to Packet Platform hardware documentation.

RELATED DOCUMENTATION

- CTP2000 Series Platform Hardware Guide
- CTP2000 Quick Start Guide
- CTP Network Management System Administration Guide

1

PART

Overview

CTP2000 Series Platform Overview | 2

CTP2000 Series Interface Modules | 13

CHAPTER 1

CTP2000 Series Platform Overview

IN THIS CHAPTER

- Introducing CTP Series Platforms | 2
- CTP2000 Series Processor | 2
- CTP2008 Platform | 3
- CTP2024 Platform | 6
- CTP2056 Platform | 9

Introducing CTP Series Platforms

Juniper Networks CTP Series Circuit to Packet platforms provide advanced technology and features required to reliably transport legacy time-division multiplexing (TDM) and other circuit-based applications across next-generation IP networks. CTP Series platforms create an IP packet flow from a serial data or analog voice connection at one end and provide the necessary processing to re-create the serial bit stream or analog signal from the received packet flow at the other end.

CTP Series platforms provide compact and lightweight chassis, high port density, and multiple Ethernet interfaces. Each CTP Series platform runs the CTP operating system (CTPOS) and can be managed by the Juniper Networks CTPView Network Management System. The CTPView Network Management System is a secure, Web-based management tool for provisioning, managing, running diagnostics, monitoring, and reporting on all CTP Series devices and circuits in the network.

CTP2000 Series Processor

Starting with CTPOS Release 6.6, Juniper Networks CTP2000 Series Circuit to Packet platforms support the PP833 processors (see Figure 1 on page 3) in addition to the older PP310 and PP332 family of processors.

The front panel of the PP833 processor comprises the following components (see Figure 1 on page 3):

- PMC—Both PMC slots are available to support compatible fiber PMC modules. For more information about the PMC module, see "CTP2000 PMC Module" on page 36 and "Installing a PMC on CTP2000 Platforms" on page 117.
- Ethernet connection—Provides the 1-Gbps Ethernet connection to the IP network by means of a local Ethernet switch or router.
- Console connection—Provides an asynchronous tty connection for locally configuring the CTP Series device. Because of front panel space limitations, the PP833 processor provides an RS232 serial console via a supplied USB-to-DB9 cable (p/n 720-071594), in which the DB-9 connector has the same pinout as a standard RS-232 DTE port.

Figure 1: PP833 Processor (AC and DC Version, Front View)

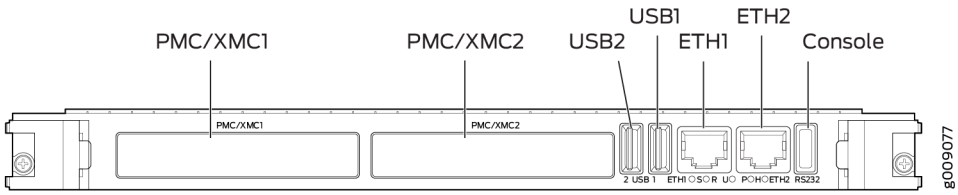

CTP2008 Platform

The Juniper Networks CTP2008 Circuit to Packet platform is a 3-U high, full-rack wide chassis designed for tabletop or shelf installation. It can also be installed in a rack with the supplied rack-mounting kit. The CTP2008 platform has one removable interface module and one removable processor module, and is available in both AC-powered and DC-powered versions. It has a removable fan tray, and the airflow is side-to-side.

PP310 is a Generation 1 or Gen 1 CPU.
PP332 is a Generation 2 or Gen 2 CPU.
PP833 is a Generation 3 or Gen 3 CPU.

The generation of the CTP system (that is, which CPU was in the purchased CTP2000 system) is indicated in the suffix of the model number. Example: CTP2024-AC-02 is a Gen 2 system with PP332 CPU.

Figure 2 on page 4, Figure 3 on page 4, and Figure 4 on page 5 show the CTP2008 chassis containing the PP332 (Gen 2 CPU) processor (which requires an RTM card for Ethernet and console port accesses). The new PP833 (Gen 3 CPU) processor module does not require an RTM card as the module itself contains Ethernet and USB-connector-type Console ports. If you are upgrading from the old PP310 (Gen 1 CPU) or PP332 (Gen 2 CPU) processor to the PP833 (Gen 3 CPU) processor, the RTM

card may be left in the node. But, none of the interfaces (Ethernet or serial ports) on the RTM panel are functional.

Figure 2: CTP2008 Chassis Containing the PP332 Processor (AC and DC Version, Front View)

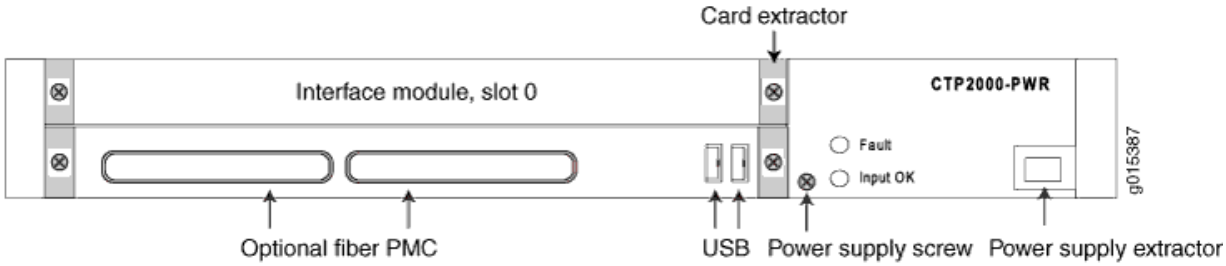

The front panel comprises the following components (see Figure 2 on page 4):

- Interface module—Include customer facing revenue interfaces, with frame processing and forwarding engines.
- Processor module—This is the system controller. There are two *optional fiber PMC* (PCI mezzanine card) locations at the top for inserting SFP PMC modules. For more information about the PMC module, see "CTP2000 PMC Module" on page 36 and "Installing a PMC on CTP2000 Platforms" on page 117.
- Power supply—To extract, loosen power supply screw, push the extractor button, and lift lever to eject the power supply module.

Figure 3: CTP2008 Platform Containing the PP332 Processor (AC Version, Rear View)

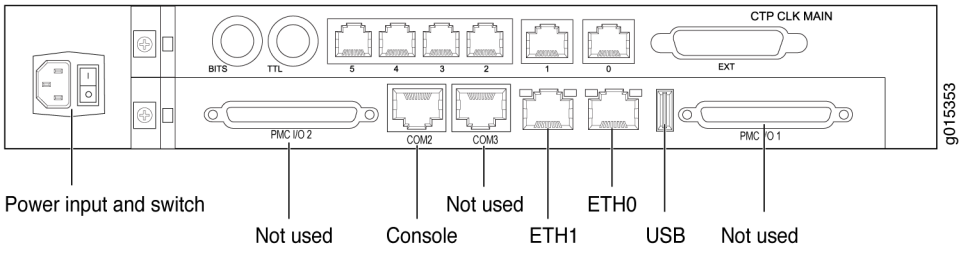

Figure 4: CTP2008 Platform Containing the PP332 Processor (DC Version, Rear View)

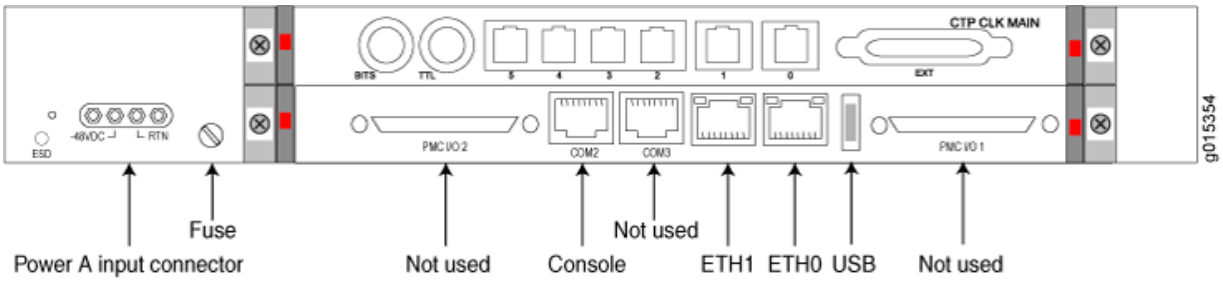

The rear panel (RTM) comprises the following components (see Figure 3 on page 4 and Figure 4 on page 5):

- CPU RTM module—This Rear Transition Module (RTM) goes behind PP310/PP332 (Gen1/Gen2) CPU card only. Otherwise, it is not used and can be removed. If used, it has the following interfaces:
  - Ethernet connection—Provides the 1-Gbps Ethernet connection to the IP network by means of a local Ethernet switch or router.
  - Console connection—Provides an asynchronous tty connection for locally configuring the CTP Series device. On the PP310 and PP332 processors, you can connect a console directly to the COM2 port (which is an RJ-45 type connector) found on the RTM panel.
  - USB: Can be used for software updates.
- Clock module—This Rear Transition Module (RTM) goes behind interface module slot 0, and provides RS422, BITS, and TTL clock inputs for physical clock references. It also provides clock distribution between modules when the backplane is in use by voice applications.
- Power input—Use a standard IEC power cord for the AC version. Use a 22-AWG fork terminal connector for the DC version. There is no power redundancy for the AC version and the DC version.

  NOTE: There are no power switches on CTP2000 Series DC models, so a readily accessible disconnect device must be provided as part of the electrical installation of the unit. We recommend the 22-AWG wire for DC power terminals.

- Ethernet connection—Provides the 1-Gbps Ethernet connection to the IP network by means of a local Ethernet switch or router.
- Console connection—Provides an asynchronous tty connection for locally configuring the CTP Series device. On the PP310 and PP332 processors, you can connect a console directly to the COM2 port (which is an RJ-45 type connector) found on the RTM panel.

RELATED DOCUMENTATION

CTP2024 Platform | 6

CTP2056 Platform | 9

CTP2024 Platform

The Juniper Networks CTP2024 Circuit to Packet platform can have up to three removable interface modules and one removable processor module, and is available in both AC-powered and DC-powered versions. It has a removable fan tray, and airflow is side-to-side.

PP310 is a Generation 1 or Gen 1 CPU.
PP332 is a Generation 2 or Gen 2 CPU.
PP833 is a Generation 3 or Gen 3 CPU.

The generation of the CTP system (that is, which CPU was in the purchased CTP2000 system) is indicated in the suffix of the model number. Example: CTP2024-AC-02 is a Gen 2 system with PP332 CPU.

No Link Title, No Link Title, and No Link Title show the CTP2024 chassis containing the PP332 (Gen 2 CPU) processor (which requires an RTM card for Ethernet and console port accesses). The new PP833 (Gen 3 CPU) processor module does not require an RTM card as the module itself contains Ethernet and USB-connector-type Console ports. If you are upgrading from the old PP310 (Gen 1 CPU) or PP332 (Gen 2 CPU) processor to the PP833 (Gen 3 CPU) processor, the RTM card may be left in the node. But, none of the interfaces (Ethernet or serial ports) on the RTM panel are functional.

Figure 5: CTP2024 Chassis Containing the PP332 Processor (AC and DC Version, Front View)

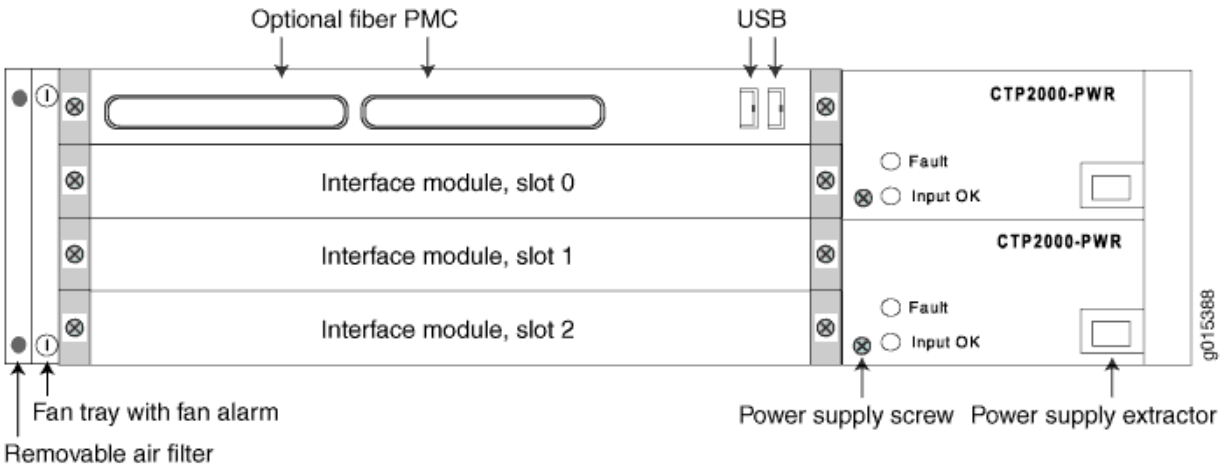

The front panel comprises the following components (see No Link Title):

- Processor module—This is the system controller. There are two *optional fiber PMC* (PCI mezzanine card) locations at the top for inserting SFP PMC modules. For more information about the PMC module, see "CTP2000 PMC Module" on page 36 and "Installing a PMC on CTP2000 Platforms" on page 117.
- Interface modules—Include customer facing revenue interfaces, with frame processing and forwarding engines.
- Power supply—To extract, loosen power supply screw, push the extractor button, and lift lever to eject the power supply module.
- Fan tray and air filter—To remove the fan tray, loosen thumb screws on the air filter and pull out. Once removed, loosen flat blade screws and pull to remove fan tray.

Figure 6: CTP2024 Platform Containing the PP332 Processor (AC Version, Rear View)

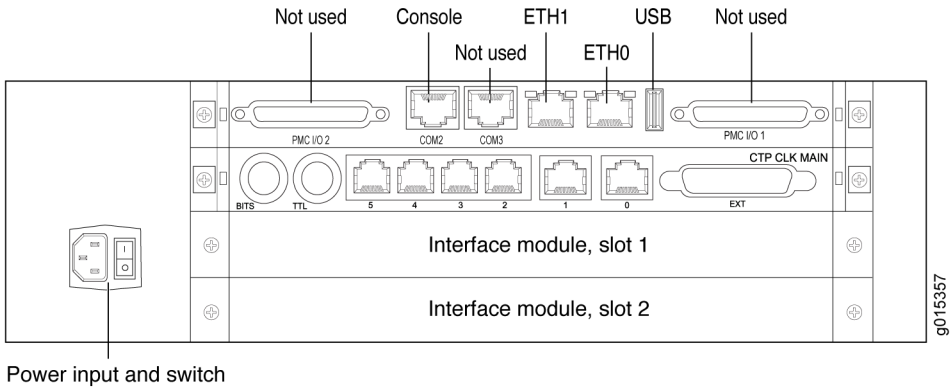

Figure 7: CTP2024 Platform Containing the PP332 Processor (DC Version, Rear View)

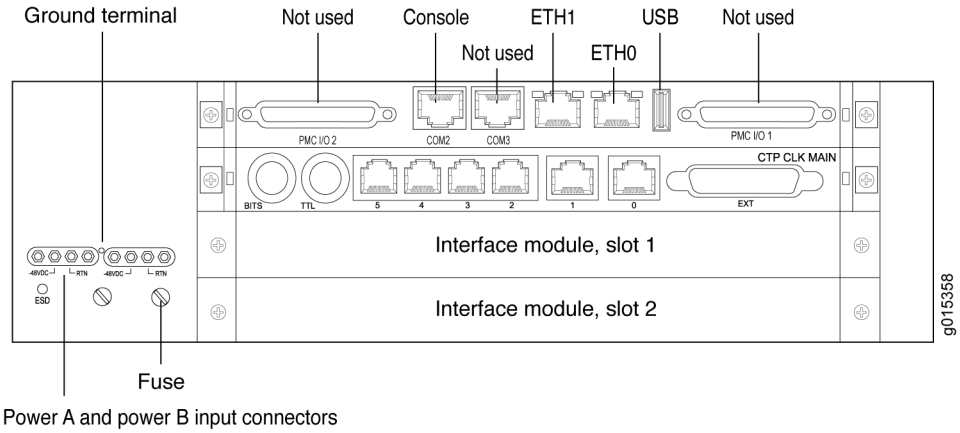

The rear panel (RTM) comprises the following components (see No Link Title and No Link Title):

- Ethernet connection—Provides the 1-Gbps Ethernet connection to the IP network by means of a local Ethernet switch or router.
- Console connection—Provides an asynchronous tty connection for locally configuring the CTP Series device. On the PP310 and PP332 processors, you can connect a console directly to the COM2 port (which is an RJ-45 type connector) found on the RTM panel.
- USB: Can be used for software updates.
- Clock module—This Rear Transition Module (RTM) goes behind interface module slot 0, and provides RS422, BITS, and TTL clock inputs for physical clock references. It also provides clock distribution between modules when the backplane is in use by voice applications.
- Power input—Use a standard IEC power cord for the AC version. Use a 22-AWG fork terminal connector for the DC version. Power redundancy is supported for the AC version and the DC version. A single IEC power cord is used to connect the redundant AC power supply modules, which keeps the chassis turned on in the event of failure of one of the power supplies.

> **NOTE:** There are no power switches on CTP2000 Series DC models. So, a readily accessible disconnect device must be provided as part of the electrical installation of the unit. We recommend the 22-AWG wire for DC power terminals.

RELATED DOCUMENTATION

CTP2056 Platform

The Juniper Networks CTP2056 Circuit to Packet platform can have up to seven removable interface modules and one removable processor module, and is available in both AC-powered and DC-powered versions. It has a removable fan tray, and the airflow is side-to-side.

PP310 is a Generation 1 or Gen 1 CPU.
PP332 is a Generation 2 or Gen 2 CPU.
PP833 is a Generation 3 or Gen 3 CPU.

The generation of the CTP system (that is, which CPU was in the purchased CTP2000 system) is indicated in the suffix of the model number. Example: CTP2024-AC-02 is a Gen 2 system with PP332 CPU.

No Link Title, No Link Title, and No Link Title show the CTP2056 chassis containing the PP332 (Gen 2 CPU) processor (which requires an RTM card for Ethernet and console port accesses). The new PP833 (Gen 3 CPU) processor module does not require an RTM card, as the module itself contains Ethernet and USB-connector-type Console ports. If you are upgrading from the old PP310 (Gen 1 CPU) or PP332 (Gen 2 CPU) processor to the PP833 (Gen 3 CPU) processor, the RTM card may be left in the node. But, none of the interfaces (Ethernet or serial ports) on the RTM panel are functional.

Figure 8: CTP2056 Chassis Containing the PP332 Processor (AC and DC Version, Front View)

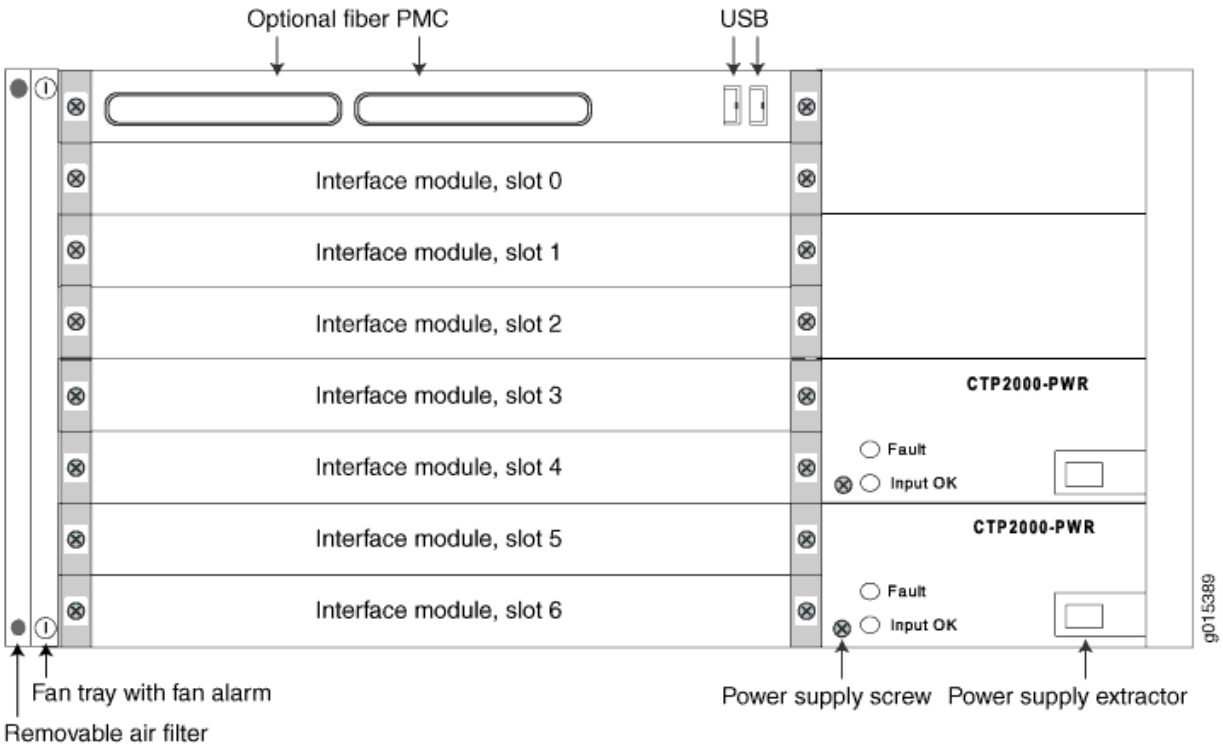

The front panel comprises the following components (see No Link Title):

- Processor module—This is the system controller. There are two *optional fiber PMC* (PCI mezzanine card) locations at the top for inserting SFP PMC modules. For more information about the PMC module, see "CTP2000 PMC Module" on page 36 and "Installing a PMC on CTP2000 Platforms" on page 117.
- Interface modules—Include customer facing revenue interfaces, with frame processing and forwarding engines.
- Power supply—To extract, loosen power supply screw, push the extractor button, and lift lever to eject the power supply module.
- Fan tray and air filter—To remove the fan tray, loosen thumb screws on the air filter and pull out. Once removed, loosen flat blade screws and pull to remove fan tray.

Figure 9: CTP2056 Platform Containing the PP332 Processor (AC Version, Rear View)

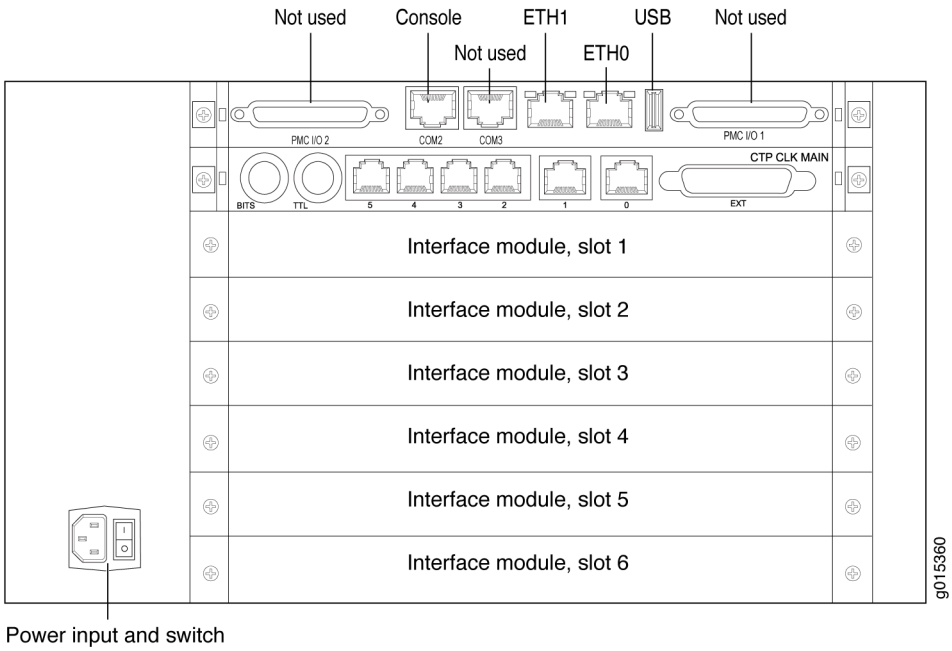

Figure 10: CTP2056 Platform Containing the PP332 Processor (DC Version, Rear View)

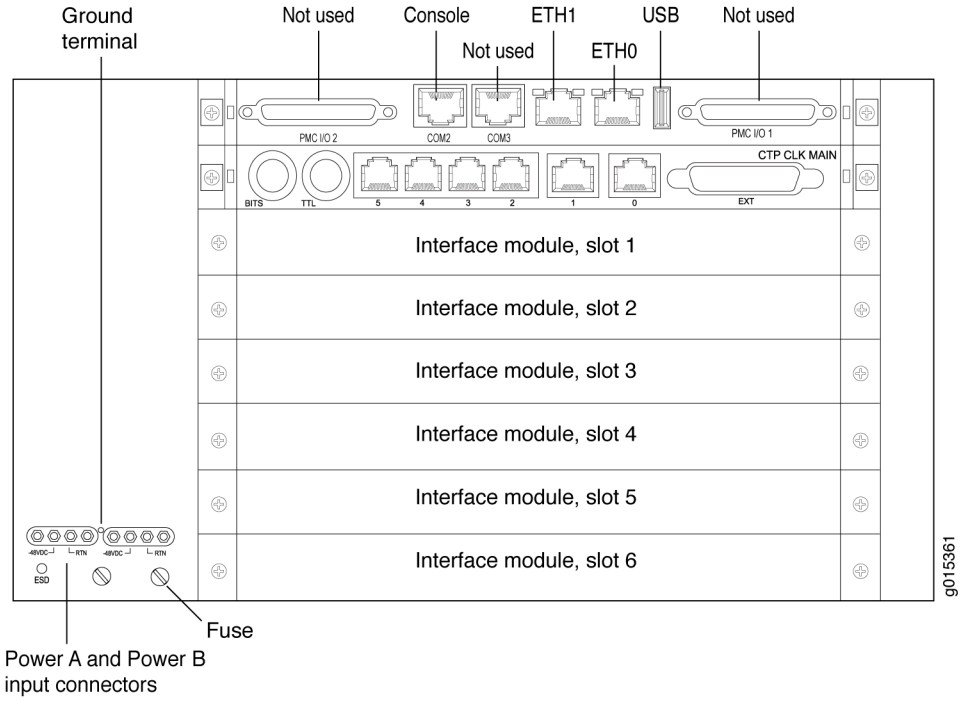

The rear panel (RTM) comprises the following components (see No Link Title and No Link Title):

- CPU RTM module—This Rear Transition Module (RTM) goes behind PP310/PP332 (Gen1/Gen2) CPU card only. Otherwise, it is not used and can be removed. If used, it has the following interfaces:
  - Ethernet connection—Provides the 1-Gbps Ethernet connection to the IP network by means of a local Ethernet switch or router.
  - Console connection—Provides an asynchronous tty connection for locally configuring the CTP Series device. On the PP310 and PP332 processors, you can connect a console directly to the COM2 port (which is an RJ-45 type connector) found on the RTM panel.
  - USB: Can be used for software updates.
- Clock module—This Rear Transition Module (RTM) goes behind interface module slot 0, and provides RS422, BITS, and TTL clock inputs for physical clock references. It also provides clock distribution between modules when the backplane is in use by voice applications.
- Power input—Use a standard IEC power cord for the AC version. Use a 22-AWG fork terminal connector for the DC version. Power redundancy is supported for the AC version and the DC version. A single IEC power cord is sufficient to connect the redundant AC power supply modules, which keeps the chassis turned on in the event of failure of one of the power supplies.

> **NOTE**: There are no power switches on CTP2000 Series DC models. So, a readily accessible disconnect device must be provided as part of the electrical installation of the unit. We recommend the 22-AWG wire for DC power terminals.

RELATED DOCUMENTATION

CTP2008 Platform | 3

CTP2024 Platform | 6

CHAPTER 2

CTP2000 Series Interface Modules

IN THIS CHAPTER

- CTP2000 Serial Interface Modules | 13
- CTP2000 T1/E1 Interface Module | 14
- CTP2000 Compression Module | 15
- CTP2000 4WE&M Interface Module | 16
- CTP2000 2W-FXS and 2W-FXO Interface Modules | 24
- CTP2000 8P-IRIG Interface Module | 31
- CTP2000 Clock Interface Modules | 32
- CTP2000 Multiservice Interface Module | 35
- CTP2000 PMC Module | 36

CTP2000 Serial Interface Modules

The Juniper Networks CTP2008, CTP2024, and CTP2056 Circuit to Packet platforms have up to one, three, and seven serial interface modules, respectively. The interface modules are interchangeable between the platforms.

The following interface modules have two 100-pin connectors similar to the connectors provided on the CTP1004 and CTP1012 platforms. Each connector provides four ports by means of the quad cable. (See "Cabling the CTP2000 Platform Overview" on page 126.) The lowest-numbered ports start at the top right.

- CTP2000 IM-8P—Provides the standard software-configurable data interfaces, including EIA530, EIA530A, RS-232, and V.35; 8 port.
- CTP2000 IM-8P-T1—Provides the standard software-configurable data interfaces, plus a configurable T1/E1 interface; 8 port.
- CTP2000 IM-8P-V—Provides the standard software-configurable data interfaces, plus a configurable 4WTO interface; 8 port.

Figure 11: Sample Serial Interface Module



RELATED DOCUMENTATION

- Cabling the CTP2000 Platform Overview | 126
- CTP2000 Serial Interface Module Pinouts | 64
- CTP2000 T1/E1 Interface Module | 14
- CTP2000 Compression Module | 15
- CTP2000 4WE&M Interface Module | 16
- CTP2000 2W-FXS and 2W-FXO Interface Modules | 24
- CTP2000 8P-IRIG Interface Module | 31

CTP2000 T1/E1 Interface Module

The CTP2000 Series T1/E1 interface module has RJ-48 ports numbered 0–7 left to right. It provides a configurable eight-port E1 (2.048 MHz) or T1 (1.544 MHz) interface with AMI or B8ZS encoding. (See Figure 12 on page 14.) You can use the eight port T1/E1 interface module to interconnect digital voice applications with CESoPSN bundles.

Figure 12: CTP2000 IM-8P-T1/E1 Interface Module

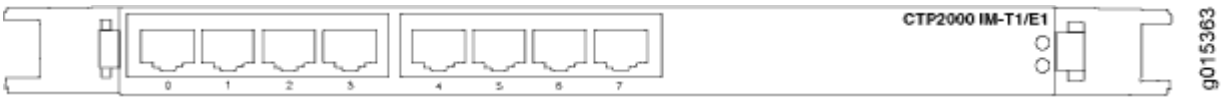

RELATED DOCUMENTATION

- CTP2000 Serial Interface Modules | 13
- CTP2000 Compression Module | 15
- CTP2000 4WE&M Interface Module | 16

CTP2000 2W-FXS and 2W-FXO Interface Modules | 24
CTP2000 8P-IRIG Interface Module | 31
T1/E1 Interface Module Pinouts | 63
Cabling a CTP2000 T1/E1 Interface Module | 129
CESoPSN Bundle Overview

CTP2000 Compression Module

The CTP2000 Series Compression Module enables serial data and voice bundles to be compressed and passed through a CTP2000 platform. It provides twice the digital signal processor (DSP) density of the original compression module. (See Figure 13 on page 15.)

Voice bundles originating from the CTP2000 IM-8P-T1/E1, analog CTP2000 IM-4WE&M, CTP2000-IM-2W-FXS, and CTP2000-IM-2W-FXO modules can use the CTP2000 Compression 2 High Density Interface Module to compress voice bundles. Voice bundles ranging from 1–24 channels on a T1 module, 1–30 channels on an E1 module, and 1–8 channels on a 4WE&M module can be bundled and connected through the Compression 2 High Density Module to compress the voice bundle and build the IP packet.

NOTE: CTP2000 Compression Module can no longer be purchased.

Figure 13: Compression Module

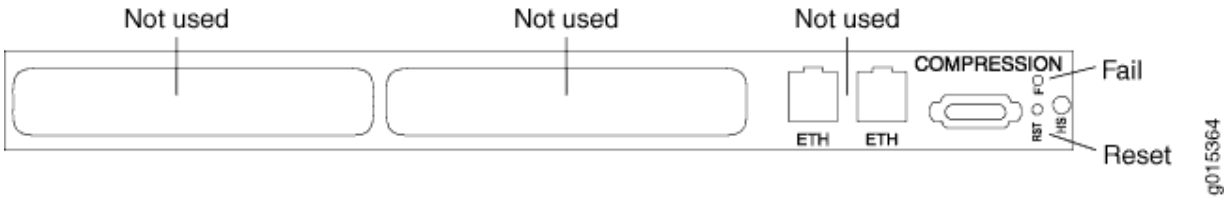

The Compression Module supports these compression algorithms:

- G.711 (64k)
- G.729AB (8k)

This module supports Mu-Law and A-Law companding, echo cancellation, silence suppression, fax/modem detection, and tone relay. You can configure the compression options when you configure the voice bundle.

RELATED DOCUMENTATION

CTP2000 T1/E1 Interface Module | 14

CTP2000 4WE&M Interface Module | 16

CTP2000 2W-FXS and 2W-FXO Interface Modules | 24

CTP2000 4WE&M Interface Module

IN THIS SECTION

- Supervisory Signaling | 21

The CTP2000 Series 4WE&M interface module has eight 4-wire E&M ports. It is used with voice compression (VCOMP) bundles in CTP2000 models and can be used only with a CTP2000 compression module. You can use the 4WE&M interface module to interconnect analog 4WE&M voice applications with CESoPSN bundles.

NOTE: You can use the eight port T1/E1 interface module to interconnect digital voice applications with CESoPSN bundles.

Four-wire audio interfaces with E and M signaling interfaces (4WE&M) are commonly used as trunks between a central office (CO) and a private branch exchange (PBX). E and M is a type of supervisory line signaling that uses separate leads, called the "E" (ear) lead and "M" (mouth) lead and are traditionally used in the telecommunications industry. In 4WE&M signaling, two wires are used to receive and two wires are used to transmit, incorporating simplex control and differential payload in each channel. Type I, II, and V signaling is supported.

The 4WE&M interface module consists of a front card and a rear transition module (RTM). Port interfaces are located on connectors A and B of the RTM. (See Figure 14 on page 17 and Figure 15 on page 17.) The RJ-45 connectors are not used.

Figure 14: CTP2000 4WE&M Module



Figure 15: 4WE&M RTM

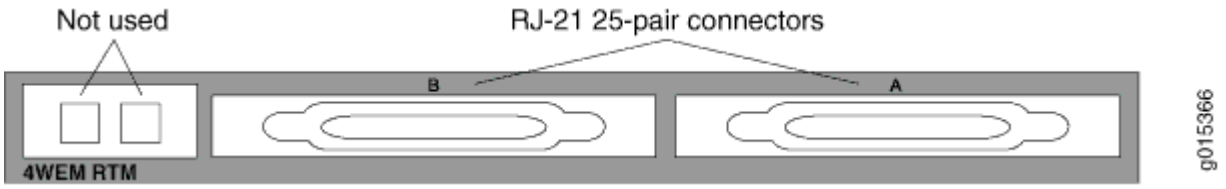

CAUTION: Power to the RTM is supplied from the interface module. Using an RTM other than those matched to the interface module may result in damage to both the interface module and the RTM. For example, never install a clock module RTM directly behind a 4WE&M interface module.

Voice ports can be used only by voice compression bundles (VCOMP) and cannot be used for CTP, SAToP, or CESoPSN bundles. There is no software configuration of 4WE&M ports. Signaling type is configured by means of jumpers (see Figure 17 on page 18 and Table 1 on page 19). One or more 4WE&M ports can be mapped to a VCOMP bundle. The bundle configuration specifies the remote destination, the local port or ports transported by the bundle, voice compression options, as well as other configuration options.

Figure 16: Jumper Locations on the RTM

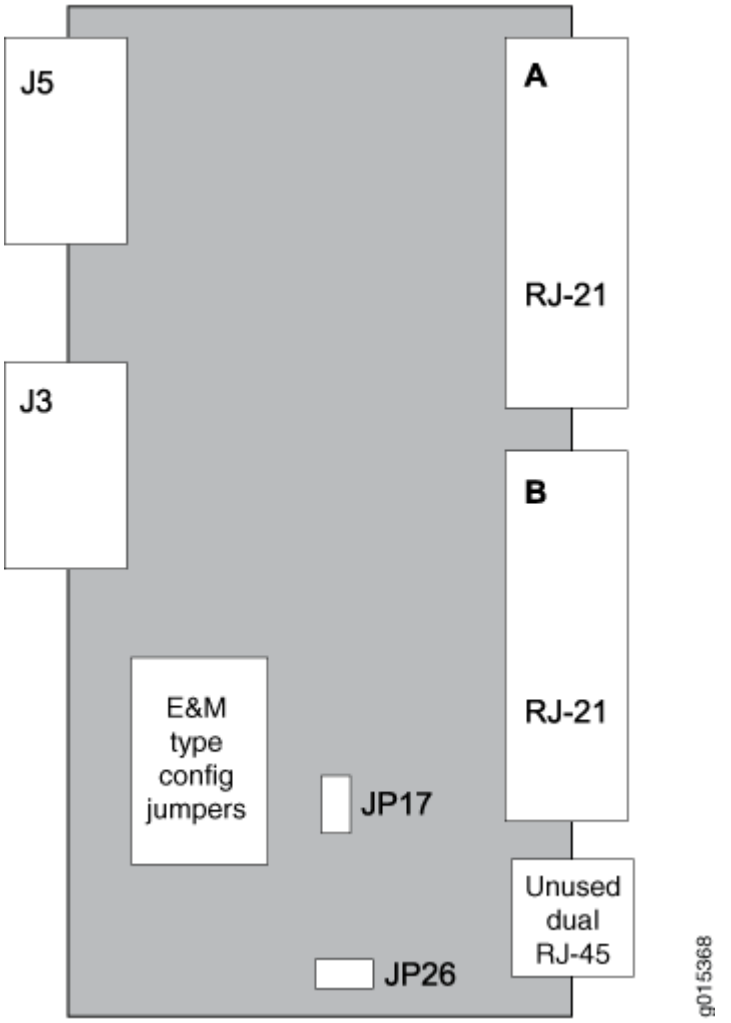

Figure 17: Jumper Positions for Signaling Types

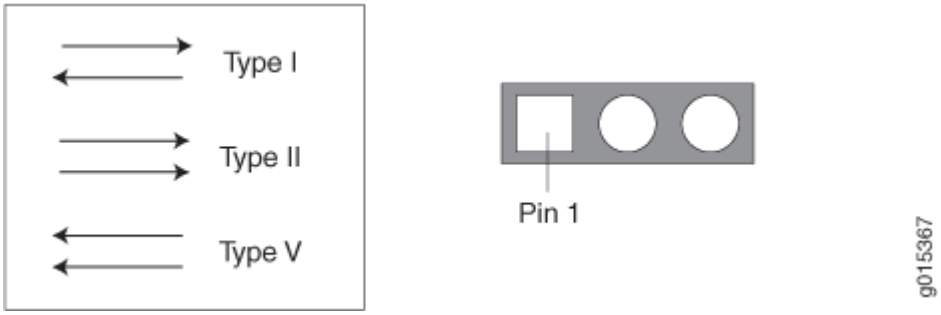

NOTE: Jumper JP17 must be in Position 1-2 (see Table 1 on page 19) if any ports are set for Type II signaling. This jumper ties all signal battery (SB) signals to battery voltage (–48V).

Jumper JP26 is used to connect all signal grounds (SG) to the chassis ground. When jumper JP26 is in Position 1-2, the signal ground is connected to the chassis ground. In Position 2-3, it is isolated from the chassis ground.

Table 1: Jumper Positions for Configuring Port Signaling Type

	Jumper	Signaling Type I	Signaling Type II	Signaling Type V
Port 0	JP1	Position 1-2	Position 2-3	Position 1-2
	JP9	Position 2-3	Position 2-3	Position 1-2
Port 1	JP2	Position 1-2	Position 2-3	Position 1-2
	JP10	Position 2-3	Position 2-3	Position 1-2
Port 2	JP3	Position 1-2	Position 2-3	Position 1-2
	JP11	Position 2-3	Position 2-3	Position 1-2
Port 3	JP4	Position 1-2	Position 2-3	Position 1-2
	JP12	Position 2-3	Position 2-3	Position 1-2
Port 4	JP5	Position 1-2	Position 2-3	Position 1-2
	JP13	Position 2-3	Position 2-3	Position 1-2
Port 5	JP6	Position 1-2	Position 2-3	Position 1-2
	JP14	Position 2-3	Position 2-3	Position 1-2

Table 1: Jumper Positions for Configuring Port Signaling Type *(Continued)*

	Jumper	Signaling Type I	Signaling Type II	Signaling Type V
Port 6	JP7	Position 1-2	Position 2-3	Position 1-2
	JP15	Position 2-3	Position 2-3	Position 1-2
Port 7	JP8	Position 1-2	Position 2-3	Position 1-2
	JP16	Position 2-3	Position 2-3	Position 1-2

The rear transition board uses two RJ-21 25-pair Telco connectors labeled **A** and **B** to interface the audio and control connections for eight E&M channels.

NOTE: Because of space limitations, a 180° RJ-21 connector is required. The CTP 4WE&M RTM supports clips to secure the RJ-21 cable connections to the RTM.

The R1/T1 pair and the R/T pair are the audio inputs and outputs of each port, respectively. For example, the audio input pair for port 0 is R1 and T1 on pins 2 and 27 of connector A. The audio output pair for port 0 is R and T on pins 1 and 26.

See Table 2 on page 20 for signal definitions. See "CTP2000 4WE&M Interface Connector Pinouts" on page 55 for the connector A and B pinouts.

Table 2: Signal Definitions

Signal Name	Signal Definition
Port x T, R	Audio transmit pair, 600 Ohm
Port x T1, R1	Audio receive pair, 600 Ohm
Port x E	E lead–output
Port x M	M lead–input

Table 2: Signal Definitions *(Continued)*

Signal Name	Signal Definition
Port x SG	Input for signal ground for signaling type II
Port x SB	Output signal battery (–48V) for signaling type II. Note that JP17 must be in position 1-2.
GND	Signal ground. E and M leads are referenced to this ground for signaling types I and V. Use JP26 to connect this ground to chassis ground.

Supervisory Signaling

Supervisory signaling is the means by which a telephone user requests a service or initiates a call. The signaling unit (CTP platform) interacts with the trunk unit (PBX) by means of either two or four leads, depending on the signaling type. (See Figure 18 on page 22.) The signaling unit controls the E lead, whereas the trunk side controls the M lead. The two signaling states are on-hook and off-hook. During inactivity both units are on-hook. See Table 3 on page 23 for a summary of signaling types supported by the CTP2000 4WE&M module.

NOTE: 4WE&M and 4WTO audio paths are always up independent of the signaling state.

Figure 18: Analog 4WE&M Signaling Types

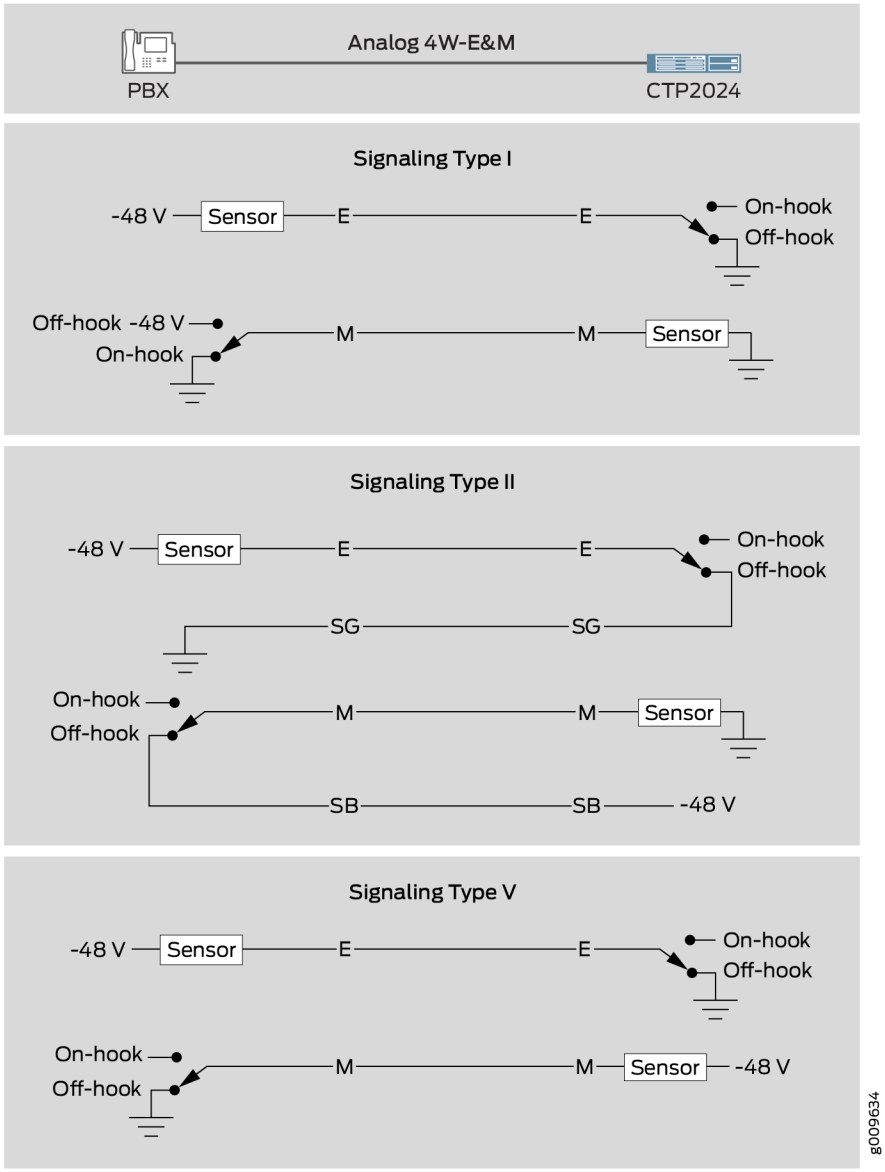

Type I uses two leads—the E and M leads—for signaling. During inactivity, the E lead is open and the M-lead is connected to ground. The CTP device connects the E lead to a grounding point to signal off-hook, and the PBX connects the M lead to the battery (–48 V) to signal off-hook. Note that two signaling units cannot be connected back-to-back. With type I signaling, the signaling and trunk units must be connected by means of a common ground. Because the two sides are not isolated, they are susceptible to noise in the audio channels.

Type II uses four leads—E, SG, M, and SB—for signaling. During inactivity, both the E and M leads are open. To signal off-hook, the PBX connects the M lead to SB and the CTP device connects the E lead to

SG. Note that two signaling units can be connected back-to-back if the appropriate signaling leads are swapped. With Type II signaling, the signaling unit and the trunk do not share a common ground.

Type V uses two leads, the E and M leads, for signaling. During inactivity, both the E and M leads are open. The CTP device signals off-hook by connecting the E lead to ground. The trunk circuit signals off-hook by connecting the M lead to ground. As with type I, with type V signaling, the two units share a common ground. Type V signaling allows for signaling units to be connected back-to-back.

Table 3: Supported Signaling Types for the CTP2000 4WE&M Module

Signaling Type	Signaling Leads	PBX (M Lead)		CTP (E Lead)	
		On-hook	**Off-hook**	**On-hook**	**Off-hook**
I	E, M	Ground	Battery	Open	Ground
II	E, M, SG, SB	Open	SB	Open	SG
V	E, M	Open	Ground	Open	Ground

RELATED DOCUMENTATION

- CTP2000 4WE&M Interface Connector Pinouts | **55**
- CTP2000 Serial Interface Modules | **13**
- CTP2000 T1/E1 Interface Module | **14**
- CTP2000 Compression Module | **15**
- CTP2000 2W-FXS and 2W-FXO Interface Modules | **24**
- CTP2000 8P-IRIG Interface Module | **31**
- CESoPSN Bundle Overview

CTP2000 2W-FXS and 2W-FXO Interface Modules

IN THIS SECTION

- Required Cables and Pinouts | 25
- Analog FXS/FXO Loop-Start Signaling | 26
- Analog FXS/FXO Ground-Start Signaling | 27
- Digital Signaling | 27

The CTP2000 2W-FXS and CTP2000 2W-FXO interface modules provide analog support for voice applications. The 2W-FXS module has 24 two-wire FXS ports and the 2W-FXO interface module has 12 two-wire FXS ports. Both are paired with an RTM.

- FXS interfaces point to the subscriber and supply battery and ring voltage. Some FXS devices also provide dial tone, but CTP FXS interfaces do not. FXS interfaces detect when the attached FXO interface goes off-hook and on-hook. An FXS interface is a two-wire interface; the leads are called the tip (T) and the ring (R).
- FXO interfaces point to the central office. An analog phone is an example of an FXO device. The FXO interface must detect ring voltage (the analog phone rings) and provide on- and off-hook indication to the FXS interface. An FXO interface is a two-wire interface; the leads are called the tip (T) and the ring (R).

You can interconnect the following voice applications with CESoPSN bundles:

- Analog 4WE&M voice applications using the 4WE&M interface module
- Digital voice applications using the T1/E1 interface module

Both interface modules consist of a front module and an RTM. See Figure 19 on page 24 and Figure 20 on page 25 for the CTP2000 2W-FXS interface module.

Figure 19: Front Panel of CTP2000 2W-FXS Interface Module

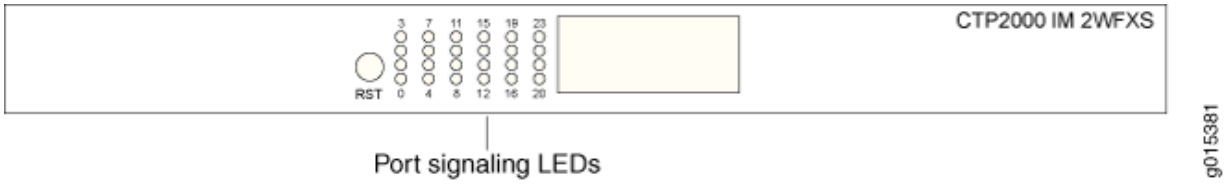

Figure 20: Rear Panel of CTP2000 2W-FXS RTM

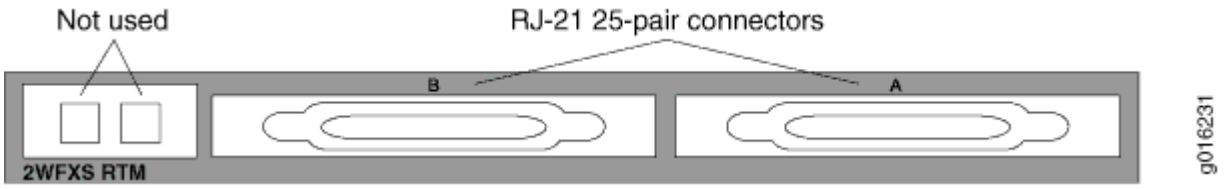

See Figure 21 on page 25 and Figure 22 on page 25 for the CTP2000 2W-FXO interface module.

Figure 21: Front Panel of CTP2000 2W-FXO Interface Module

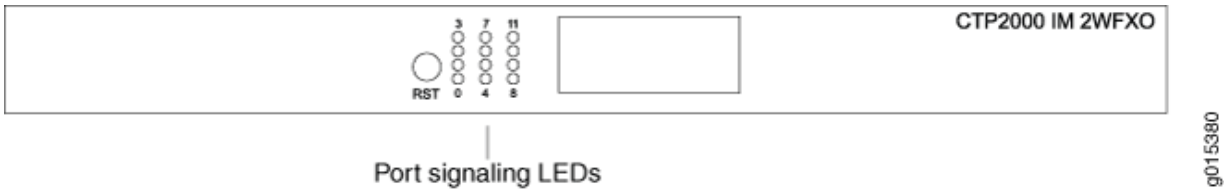

Figure 22: Rear Panel of CTP2000 2W-FXO RTM

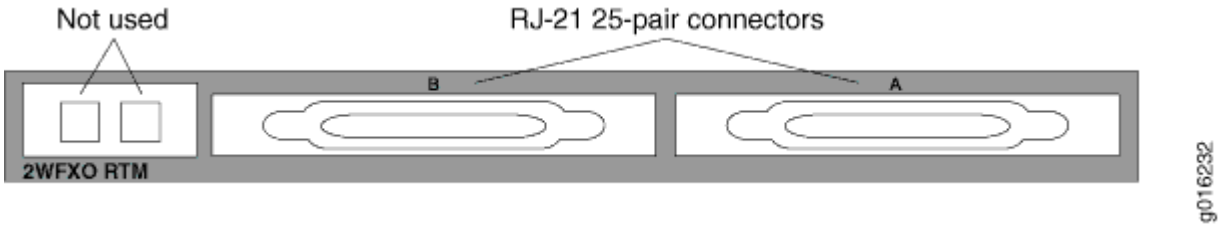

Both modules use connector A on the RTM. For both modules, connector B and the RJ-45 connectors are not used. See "CTP2000 FXS and FXO Interface Module Cables and Pinouts" on page 59 for connector pinout information.

You set the signaling by using the software on both modules. You cannot reconfigure the jumper parameters.

Required Cables and Pinouts

The CTP2000 2W-FXS and 2W-FXO interface modules require the use of double-shielded cables (copper braid plus aluminum mylar foil) to ensure EMI compliance. See "CTP2000 FXS and FXO Interface Module Cables and Pinouts" on page 59 for particulars about cable pinouts.

Analog FXS/FXO Loop-Start Signaling

There are two basic signaling protocols for FXS/FXO interfaces: loop-start and ground-start. Residential telephones use loop-start. Ground-start is typically used between a CO and a PBX to prevent “glare.” Glare occurs when a call is established by the FXS device and the FXO device tries to make a call before the ring has been detected.

When a call is initiated from the CO (or FXS) side, the FXS interface puts an AC ring voltage on the R lead (typically 70-90 Vrms). This ring voltage generates the ringing that you hear on an analog phone. When the FXO device answers the call (someone picks up the handset), the switch is closed between the T and R leads to complete a loop between the battery and ground in the FXS device. The FXS device detects the current, which flows from the battery (–48 V) through the R leads and back through the T leads to ground and stops the ring voltage.

When a call is initiated by the CPE (or FXO) device, the device goes off-hook, closing the connection between the T and R leads. The FXS device senses the current flow in the loop. Either the attached FXS device, or an upstream FXS device, provides dial tone to the FXO device after it is ready to accept the digits for the call destination. Providing dial tone is a form of start-dial supervision.

On the FXO device, when the device is on-hook, there is an open lead between the T and R leads. When the device is off-hook, the T and R leads are shorted with a typical load of ~300 Ohms. With loop-start, the T and R leads on the FXO interface can be switched without adversely affecting the signaling.

Glare occurs when a call is established by the FXS device and the FXO tries to make a call before the ring has been detected. Because it takes time for the FXO device (or person about to place a call) to detect ringing, it is possible for the FXS and FXO devices to both seize the line without knowledge that the other end has done so. Ground-start circuits were established the minimize the possibility of glare. See "Analog FXS/FXO Ground-Start Signaling" on page 27.

Answer Supervision

Answer supervision is a signal used by the phone companies to determine when to start billing the originator of the call. Without answer supervision, you could get billed for the time the phone was ringing, even if the call was never picked up. When the FXS device has detected that the FXO device has gone off-hook, it reverses the polarity between the T and R leads for the duration of the call.

Disconnect Supervision

Disconnect supervision is a signal sent by the FXS device to the FXO device to indicate that the call has ended. The disconnect supervision signal can be either a battery reversal, battery denial (more than 350 ms), or a tone.

Note that loop-start circuits are not sensitive to tip/ring reversal. For example, the tip on the FXO device may be connected to either the tip or ring on the FXS.

Analog FXS/FXO Ground-Start Signaling

Ground-start signaling is used to minimize the potential for glare. Unlike loop-start circuits, ground-start circuits operate correctly only when the FXO tip is connected to the FXS tip and the FXO ring is connected to the FXS ring. Also, unlike loop-start circuits, the FXS and FXO grounds must be at the same potential.

When on-hook, the FXO ring is not connected to either the tip or ground. Likewise, when idle, the FXS tip is not connected to ground. When a call is initiated from the CO (FXS side), the FXS grounds its tip and applies an AC ring voltage to the R lead. The FXO device senses the grounded tip and AC ring voltage, and then goes off-hook by closing the loop (connecting R to T). The FXO has 100 ms to respond to the grounded tip/ring voltage. This time constraint is used to minimize glare. Once the FXO has closed the loop, the call proceeds as in the loop-start case.

When a call is initiated by the customer (FXO) side, the FXO starts by grounding the R lead. The FXS side responds by grounding its T lead. After the FXO has detected the grounded T lead, it closes the loop by removing the R lead from ground and closing the loop. With ground-start circuits, a far-end disconnect (FXS side) is indicated by the FXS disconnecting the tip from ground. The FXO senses the tip disconnect and goes on-hook by opening the loop.

Digital Signaling

Channel banks are often used to multiplex and demultiplex FXS or FXO interfaces onto T1 or E1 digital circuits. In the process, the analog signal is converted into pulse code modulation (PCM) and carried by one of the channels in the time-division multiplexing (TDM) circuit. For the interface to function properly, it must be able to signal the remote end of the T1/E1 connection as well as respond to signals from the remote end. Signaling is carried over the TDM circuit using either channel-associated signaling (CAS) or common-channel signaling (CCS). Generally, four signaling bits (A, B, C, and D) may be used; however, two signaling bits are most common (A and B).

For CTP analog voice products to work with digital devices, A and B bits are generated and transported across the network.

Digital FXS/FXO Loop-Start Signaling

For loop-start signaling of FXS and FXO interfaces, the A bit is used to indicate the state of the current loop, whereas the B bit is used for ringing. In the idle state (no ringing, FXO on-hook), A=0 and B=1. A=1 when the FXO is off-hook. Ringing is signaled by the B bit toggling between 0 and 1. Typically the toggling is 2 seconds off and 4 seconds on. For digital loop-state, the signaling is bidirectional.

Because hook indication is detected by the analog FXS interface, this device is responsible for generating the A bit. Likewise, because the analog FXS interface generates the ring voltage, this device must respond to the B bit. Because the signaling is bidirectional, the FXS side must echo the B bit when sending out the A bit.

The same logic applies to the FXO interface. The FXO device goes on/off-hook. It must respond to the A bit, going off-hook when A transitions from 0 to 1, and going on-hook when A goes from 1 to 0. The analog FXO interface detects ringing; therefore, it is responsible for generating the B bit value. The FXO device must echo the A value when sending out the digital signaling over the network.

Two situations for this call sequence must be considered: when the CTP is the FXO device and when the CTP platform is the FXS device. In both cases, before the call starts, the FXO is on-hook (A=1) and there is no ringing (B=1).

- For an analog CTP FXS interface, before the call starts, the CTP interface must generate A=0 and send both A=0 and B=1. When the call initiates from the CO, the B bit is toggled. In response to this toggling, the CTP device generates a ring voltage on the analog FXS interface. When the attached FXO device goes off-hook, the CTP FXS interface detects the off-hook, sets the A bit to 1, and stops the ring voltage. During the call, the CTP device sends A = B = 1 signaling bits. At the end of the call, the FXO device goes back to on-hook, the CTP detects the on-hook, sends out A=0 and B=1 signaling bits, and the circuit returns to the idle state.
- For an analog CTP FXO interface, before the call starts the FXO is on-hook and no ringing is generated by the attached FXS device. In this, the idle state, the CTP interface generates B=1 and sends both A=0 and B=1. When the call comes in from the CO, the CTP FXO interface detects ring voltage and starts toggling the B bit. When the other end of the VCOMP bundle goes off-hook, it sends A=1 to the CTP. In response, the CTP FXO interface closes the loop, going off-hook. With ringing stopped, the CTP interface sends A = B = 1 during the call. At the end of the call the interface is again idle, and the CTP interface sends A=0 and B=1 signaling bits.

Digital FXS/FXO Ground-Start Signaling

Unlike loop-start interfaces, in which the FXO and FXS each separately control a single signaling bit, with ground-start signaling each side controls both the A and B bits. We must consider each interface when the call is initiated by either interface. (See Table 4 on page 28, Table 5 on page 29, Table 6 on page 29, and Table 7 on page 30). In all cases, when the FXO/FXS interface is idle, the FXO interface generates A = B = 1 signaling bits and the FXS A = 0, B = 1. When a call is in progress, either side initiates a call termination if it receives these signaling bits. For example, an FXS goes on-hook if it receives A=B=1 signaling bits.

Table 4: Ground-Start Signaling at FXO Interface for Call Initiated by the FXO Interface

	Signaling Bits to FXO	Signaling Bits from FXO
Idle (before call starts)	01 (A=0, B=1)	11 (A=1, B=1)
FXO grounds ring	00	11

Table 4: Ground-Start Signaling at FXO Interface for Call Initiated by the FXO Interface *(Continued)*

	Signaling Bits to FXO	Signaling Bits from FXO
FXS goes off-hook (grounds tip)	00	01
FXO goes off-hook (closes loop)	11	01
Duration of call	11	01

Table 5: Ground-Start Signaling at FXO Interface for Call Initiated by the FXS Interface

	Signaling Bits to FXO	Signaling Bits from FXO
Idle (before call starts)	01 (A=0, B=1)	11 (A=1, B=1)
FXS goes off-hook (grounds tip and sends AC ring signal)	01	00/01 (B-bit toggles)
FXO goes off-hook (closes loop)	11	01
Duration of call	11	01

Table 6: Ground-Start Signaling at FXS Interface for Call Initiated by the FXS Interface

	Signaling Bits to FXS	Signaling Bits from FXS
Idle (before call starts)	11 (A=1, B=1)	01 (A=0, B=1)
FXS goes off-hook (grounds tip and sends AC ring signal)	00/01 (B-bit toggles)	01
FXO goes off-hook (closes loop)	01	11

Table 6: Ground-Start Signaling at FXS Interface for Call Initiated by the FXS Interface *(Continued)*

	Signaling Bits to FXS	Signaling Bits from FXS
Duration of call	01	11

Table 7: Ground-Start Signaling at FXS Interface for Call Initiated by the FXO Interface

	Signaling Bits to FXS	Signaling Bits from FXS
Idle (before call starts)	11 (A=1, B=1)	01 (A=0, B=1)
FXO grounds ring	11	00
FXS goes off-hook (grounds tip and sends AC ring signal)	01	00
FXO goes off-hook (closes loop)	01	11
Duration of call	01	11

RELATED DOCUMENTATION

- CTP2000 Serial Interface Modules | **13**
- CTP2000 T1/E1 Interface Module | **14**
- CTP2000 Compression Module | **15**
- CTP2000 4WE&M Interface Module | **16**
- CTP2000 8P-IRIG Interface Module | **31**
- CTP2000 FXS and FXO Interface Module Cables and Pinouts | **59**
- CESoPSN Bundle Overview

CTP2000 8P-IRIG Interface Module

The CTP2000 8P-IRIG interface module enables an interrange instrumentation group time code (IRIG-B) signal to be transported through an IP network. IRIG-B is a special time code transmission format that uses a hybrid analog/digital physical interface. The IRIG-B standard consists of a family of rate-scaled serial time codes with formats containing up to three coded expressions or words. The IRIG-B pulse code contains one frame of 100 elements per second for the time of the year and GPS receiver status. IRIG-B encodes day of year, hour, minute, and second data on a 1-KHz carrier frequency, with an update rate of once per second.

The CTP2000 8P-IRIG module has eight ports. You can configure direction, high and low level output, and data range for this module. (See Figure 23 on page 31.)

NOTE: CTP2000 8P-IRIG Interface Module can no longer be purchased.

Figure 23: CTP2000 8P-IRIG Interface Module



RELATED DOCUMENTATION

CTP2000 Serial Interface Modules | **13**

CTP2000 T1/E1 Interface Module | **14**

CTP2000 Compression Module | **15**

CTP2000 4WE&M Interface Module | **16**

CTP2000 2W-FXS and 2W-FXO Interface Modules | **24**

CTP2000 Clock Interface Modules

IN THIS SECTION

- External Reference Clock | 34
- Installation Notes for Clock Interface Modules | 34

Clock interface modules provide clock distribution between modules when the backplane is in use by voice applications.

The clock rear transition module (RTM) is used to input a reference clock into the CTP2000 platform. The clock RTM is installed in the rear of the chassis behind the first interface module as follows:

- On CTP2008 devices, the first slot above the processor RTM.
- On the CTP2024 and CTP2056 devices, the first slot below the processor RTM.

Clock distribution is accomplished through a “hub-and-spoke” configuration composed of a main module and a spoke module. Clock main modules (Figure 24 on page 32) and clock spoke modules (Figure 25 on page 32) allow more clock input types in the CTP2000 chassis and provide the capability for clock distribution when both serial or T1/E1 interface modules and voice modules are installed in the same CTP2000 chassis.

Figure 24: Clock Main Module

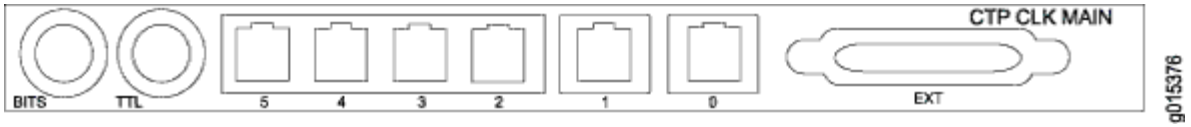

Figure 25: Clock Spoke Module



The clock main module accepts an external clock reference and distributes it to the spoke module using a twisted pair cable. Each nonvoice card receives the clock on the first RJ-45 and sends it to the front module.

Figure 26: Hub-and-Spoke Setup

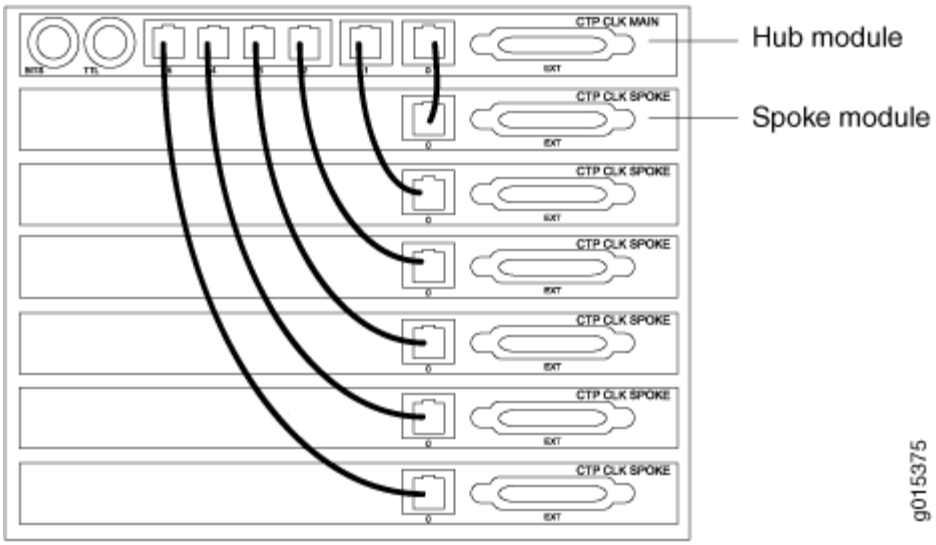

The main clock module has two BNC inputs (BITS and TTL), six RJ-45 ports, and one DB-25 port. Each RJ-45 port can be connected to one spoke module. The spoke module has one ingress RJ-45 port and one DB-25 interface. (See Figure 24 on page 32, Figure 25 on page 32, and Figure 26 on page 33.)

NOTE: The latest version of the clock main module does not have the BITS connector and no longer supports a BITS BNC input. If you need a BITS timing reference to or from a CTP2000 node, you can use any of ports te-0/0 through te-0/3 if you have a T1/E1 interface module in the first slot.

NOTE: BITS input is a T1/E1 line interface unit (LIU), with AMI (alternate mark inversion) encoding enabled and B8ZS/HDB3 (Zero Suppression) disabled. The equalization is set for a 0-133 feet cable. An internal 100 ohm termination is present, although it might need to be externally augmented based on the type of cabling used. Any valid AMI signal works properly and it is not restricted to only the "all 1" BITS signal but the ones density must be sufficient to prevent LOS (according to the ITU G.775 recommendation). The TTL input has a slice point of 3.3V/2 = 1.65V relative to chassis ground (GND). Therefore, any signal on the coaxial center conductor that transitions through that voltage registers a transition. There are many signals,

besides TTL, that satisfy this criteria. An external termination must be provided that matches the impedance of the cable that goes to the BNC connector.

If you can configure the rate in CTP menu, then the TTL supports a frequency of 2048 KHz for the TTL clock input, provided the signal is good and noise-free (terminated properly). TTL is rate-agile, while BITS is restricted to T1/E1 frequencies.

The TTL input is high-impedance (no on-board termination provided) because a variety of cable types might exist that you can use to drive signal to this connector, such as RG-58 coax (50 ohm), RG-59 coax (75 ohm), or twisted pair (100-120 ohm). Instead of applying a particular impedance termination on the board and have it incorrectly done, we recommend that you configure the impedance termination based on your network environment. For example, a 50 ohm termination is needed if you are using RG-58/U coax cable, which has 50 ohm impedance.

External Reference Clock

The CTP2000 device can receive the external reference clock from any of the following inputs on the clock main module:

- The DB-25 connector. The clock input is provided on pins 24 and 11.
- The T1/E1 BITS inputs

  NOTE: The latest version of the clock main module does not have the BITS connector and no longer supports a BITS input. If you need a BITS timing reference to or from a CTP2000 node, you can use any of ports te-0/0 through te-0/3 if you have a T1/E1 interface module in the first slot.

- The T1/E1 TTL input

Installation Notes for Clock Interface Modules

- Main modules and spoke modules are not hot-swappable.
- Nonvoice modules and voice modules can be installed in any slot.
- Main clock RTMs must be installed in slot 0 behind either a serial module or a T1/E1 module.
- Spoke RTMs must be installed behind serial modules and the lowest-numbered T1/E1 slot.
- If a T1/E1 module is installed in the slot that is closest to the processor, a spoke RTM is not needed behind any T1/E1 modules. They will synchronize to the H.100 clock.

- For platforms with only nonvoice boards (serial or T1/E1 module), only a main RTM is needed for external clock reference input.

> **NOTE**: The clock RTM is installed in the rear of slot 0 next to the CPU slot. When you upgrade from an older processor to a PP833 processor, you can leave the CPU RTM in the chassis. Leaving the CPU RTM in the chassis will not adversely affect the functioning of the PP833 processor. Leaving the RTM installed will provide proper airflow within the CTP node.

RELATED DOCUMENTATION

Installing a CTP Interface Module, Processor Module, or Clock Module | 113

Removing a CTP Interface Module, Processor Module, or Clock Module | 114

CTP2000 Multiservice Interface Module

The Juniper Networks CTP2000 Circuit to Packet platform optionally includes an 8-port Serial Multiservice Interface module (CTP2000-IM-8p-MS) as shown in Figure 27 on page 35.

Figure 27: CTP2000 Serial Multiservice Interface Module



The cable used with the Serial Multiservice Interface module is CTP-CBL-4Q.

The module can operate in the following modes:

- Audio—Provides single and dual channel audio support for varying quality audio from 8-bit, 8-KHz quality to 8-bit up to 16-bit, 48-KHz quality (CD quality).
- 4WTO—Provides single and dual channel audio support for 8-bit, 8-KHz quality with squelch support for radio backhaul. In 4WTO mode, the Multiservice interface module is interoperable with 4WTO daughter cards.
- IRIG—Enables an interrange instrumentation group time code (IRIG-B) signal to be transported through an IP network.

- TDC—Provides combined time-correlated support for IRIG/NRZ data for telemetry applications.

The interface module is supported on CTP bundles; You use the bundles to configure the modes of operation.

RELATED DOCUMENTATION

Serial Multiservice Interface Module Overview

CTP2000 PMC Module

The PCI mezzanine card (PMC) is mounted on the processor module and can be installed or replaced in the field. Two PMC slots are available in the processor's front panel to support two compatible PMC modules. Figure 28 on page 37 displays the location of the PMC module on the CPU card. The following PMC modules are available:

- CTP-FX2000GE-UPG—Dual SC multimode fiber Gigabit Ethernet PMC module offers dual 1000 Mbit Ethernet connectivity with SX signaling on an SC fiber connector.
- CTP-FX2000FE-UPG—Dual SC multimode fiber Fast Ethernet PMC module offers dual 100FX Fast Ethernet connectivity on an SC fiber connector.
- CTP-Fiber-PMC—Fiber PMC card supports up to two SFP modules. Supported SFP modules are:
  - CTP-SFP-1GE-T: Small form-factor pluggable 1000BASE-T Gigabit Ethernet module (uses Cat 5 cable)
  - CTP-SFP-1GE-SX: Small form -factor pluggable 1000BASE- SX Gigabit Ethernet optic module
  - CTP-SFP-1GE-LX: Small form-factor pluggable 1000BASE-LX Gigabit Ethernet optic module

For information about how to install a PMC on CTP2000 Platforms, see "Installing a PMC on CTP2000 Platforms" on page 117.

Figure 28: CTP2000 PMC Module Location

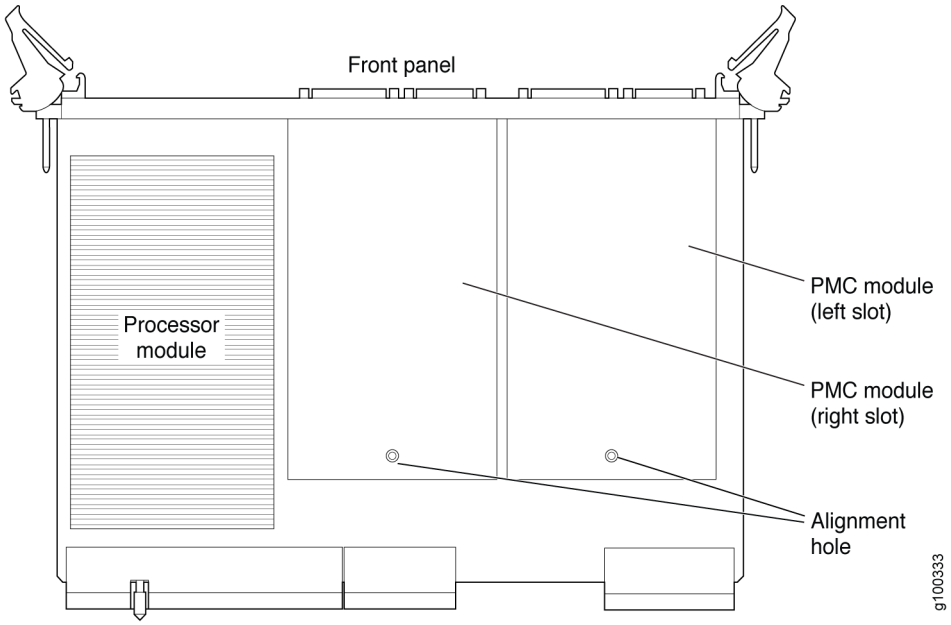

RELATED DOCUMENTATION

- CTP2000 Serial Interface Modules | **13**
- CTP2000 T1/E1 Interface Module | **14**
- CTP2000 Compression Module | **15**
- CTP2000 4WE&M Interface Module | **16**
- CTP2000 2W-FXS and 2W-FXO Interface Modules | **24**
- CTP2000 8P-IRIG Interface Module | **31**
- Installing a PMC on CTP2000 Platforms | **117**

PART 2

Planning

System Specifications | 39

Planning and Preparing the Site | 49

Equipment Rack Requirements | 51

Cable and Pinout Specifications | 55

CHAPTER 3

System Specifications

IN THIS CHAPTER

- CTP2008 Platform Specifications and Certification | 39
- CTP2024 Platform Specifications and Certification | 42
- CTP2056 Platform Specifications and Certification | 45

CTP2008 Platform Specifications and Certification

Table 8: CTP2008 Platform Specifications

Category	Specification
Weight	
Chassis only	16 lb (7.25 kg)
Dimensions	
Chassis only	1.75 in. (4.44 cm) high 17.25 in. (43.81 cm) wide 11.25 in. (28.57 cm) deep
Environmental Requirements	
Ambient operating temperature	32° to 104° F (0° to 40° C)
Ambient operating humidity	5% to 90% (noncondensing)

Table 8: CTP2008 Platform Specifications *(Continued)*

Category	Specification
DC Input	
Voltage	–40 to –72 VDC
Current	3A @ –48 VDC
Power	144 W
Redundancy (input power)	2 independent line feeds
AC Input	
Power required	100–240 VAC
AC line frequency	50–60 Hz
Nominal current (115V amps)	2.0
Power	200 W
Space Requirements	3 ft. (90 cm) behind device or rack. Do not block air vents on the sides of the device.
Airflow	Airflow occurs from side to side of the device. • Air intake occurs from the left side of the device. • Air is exhausted out the right side of the device.

Table 8: CTP2008 Platform Specifications *(Continued)*

Category	Specification
Safety Agency Certification	• AS/NZS 60950:2000 Safety of Information Technology Equipment • CAN/CSA-C22.2, No. 60950-1–03, First Edition, Information Technology Equipment - Safety - Part 1: General Requirements • EN60825-1, Safety of Laser Products - Part 1: Equipment Class, Requirements, and User's Guide (2001) • IEC 60950-1(2001-10) Ed. 1.0 Information Technology Equipment - Safety - Part 1: General Requirements • Low Voltage Directive (2006/95/EC) • UL 60950-1, First Edition, Information Technology Equipment - Safety - Part 1: General Requirements
Electromagnetic Emissions Agency Certification	• AS/NZS CISPR 22:2004 • EMC Directive (89/336/EEC) • EN 300 132–2 (Narrowband and Wideband) • EN55022 Class A (CISPR-22 Class A) • EN55024, Annex C for WAN Equipment Performance Criteria A, B, and C • EN 61000-4-2, EN 61000-4-3, EN 61000-4-4, EN 61000-4-6 • ETSI 300-386, Telecommunication Network Equipment; ElectroMagnetic Compatibility (EMC) requirements • IECS-03 Issue 3 Class A • FCC Part 15 Class A • VCCI (Voluntary Control Council for Interference by Information Technology Equipment)

RELATED DOCUMENTATION

CTP2024 Platform Specifications and Certification | 42

CTP2056 Platform Specifications and Certification | 45

CTP2024 Platform Specifications and Certification

Table 9: CTP2024 Platform Specifications

Category	Specification
Weight	
Chassis only	20 lb (9.07 kg)
Dimensions	
Chassis only	3.5 in. (8.89 cm) high 17.25 in. (43.81 cm) wide 11.25 in. (28.57 cm) deep
Environmental Requirements	
Ambient operating temperature	32° to 104° F (0° to 40° C)
Ambient operating humidity	5% to 90% (noncondensing)
DC Input	
Voltage	–40 to –72 VDC
Current	3A @ –48 VDC
Power	144 W

Table 9: CTP2024 Platform Specifications *(Continued)*

Category	Specification
Redundancy (input power)	2 independent line feeds
AC Input	
Power required	100–240 VAC
AC line frequency	50–60 Hz
Nominal current (115V amps)	2.0
Power	200 W
Space Requirements	3 ft. (90 cm) behind device or rack. Do not block air vents on the sides of the device.
Airflow	Airflow occurs from side to side of the device. • Air intake occurs from the left side of the device. • Air is exhausted out the right side of the device.

Table 9: CTP2024 Platform Specifications *(Continued)*

Category	Specification
Safety Agency Certification	• AS/NZS 60950:2000 Safety of Information Technology Equipment • CAN/CSA-C22.2, No. 60950-1–03, First Edition, Information Technology Equipment - Safety - Part 1: General Requirements • EN60825-1, Safety of Laser Products - Part 1: Equipment Class, Requirements, and User's Guide (2001) • EN 60950-1:2001, First Edition, Information Technology Equipment - Safety - Part 1: General Requirements • IEC 60950-1(2001-10) Ed. 1.0 Information Technology Equipment - Safety - Part 1: General Requirements • Low Voltage Directive (2006/95/EC) • UL 60950-1, First Edition, Information Technology Equipment - Safety - Part 1: General Requirements
Electromagnetic Emissions Agency Certification	• AS/NZS CISPR 22:2004 • EMC Directive (89/336/EEC) • EN 300 132–2 (Narrowband and Wideband) • EN55022 Class A (CISPR-22 Class A) • EN55024, Annex C for WAN Equipment Performance Criteria A, B, and C • EN 61000-4-2, EN 61000-4-3, EN 61000-4-4, EN 61000-4-6 • ETSI 300-386, Telecommunication Network Equipment; ElectroMagnetic Compatibility (EMC) requirements • IECS-03 Issue 3 Class A • FCC Part 15 Class A • VCCI (Voluntary Control Council for Interference by Information Technology Equipment)

RELATED DOCUMENTATION

CTP2008 Platform Specifications and Certification | 39

CTP2056 Platform Specifications and Certification | 45

CTP2056 Platform Specifications and Certification

Table 10: CTP2056 Platform Specifications

Category	Specification
Weight	
Chassis only	27 lb (12.25 kg)
Dimensions	
Chassis only	7.0 in. (17.8 cm) high 17.25 in. (43.81 cm) wide 11.25 in. (28.57 cm) deep
Environmental Requirements	
Ambient operating temperature	32° to 104° F (0° to 40° C)
Ambient operating humidity	5% to 90% (noncondensing)
DC Input	
Voltage	–40 to –72 VDC
Current	4A @ –48 VDC
Power	192 W

Table 10: CTP2056 Platform Specifications *(Continued)*

Category	Specification
Redundancy (input power)	2 independent line feeds
AC Input	
Power required	100–240 VAC
AC line frequency	50–60 Hz
Nominal current (115V amps)	2.5
Power	250 W
Space Requirements	3 ft. (90 cm) behind device or rack. Do not block air vents on the sides of the device.
Airflow	Airflow occurs from side to side of the device. • Air intake occurs from the left side of the device. • Air is exhausted out the right side of the device.

Table 10: CTP2056 Platform Specifications *(Continued)*

Category	Specification
Safety Agency Certification	• AS/NZS 60950:2000 Safety of Information Technology Equipment • CAN/CSA-C22.2, No. 60950-1–03, First Edition, Information Technology Equipment - Safety - Part 1: General Requirements • EN60825-1, Safety of Laser Products - Part 1: Equipment Class, Requirements, and User's Guide (2001) • EN 60950-1:2001, First Edition, Information Technology Equipment - Safety - Part 1: General Requirements • IEC 60950-1(2001-10) Ed. 1.0 Information Technology Equipment - Safety - Part 1: General Requirements • Low Voltage Directive (2006/95/EC) • UL 60950-1, First Edition, Information Technology Equipment - Safety - Part 1: General Requirements
Electromagnetic Emissions Agency Certification	• AS/NZS CISPR 22:2004 • EMC Directive (89/336/EEC) • EN 300 132–2 (Narrowband and Wideband) • EN55022 Class A (CISPR-22 Class A) • EN55024, Annex C for WAN Equipment Performance Criteria A, B, and C • EN 61000-4-2, EN 61000-4-3, EN 61000-4-4, EN 61000-4-6 • ETSI 300-386, Telecommunication Network Equipment; ElectroMagnetic Compatibility (EMC) requirements • IECS-03 Issue 3 Class A • FCC Part 15 Class A • VCCI (Voluntary Control Council for Interference by Information Technology Equipment)

RELATED DOCUMENTATION

CTP2008 Platform Specifications and Certification | 39

CTP2024 Platform Specifications and Certification | 42

CHAPTER 4

Planning and Preparing the Site

IN THIS CHAPTER

- Before You Install a CTP Platform | 49
- CTP2000 Environmental Requirements | 49

Before You Install a CTP Platform

Before you install a Juniper Networks CTP Circuit to Packet platform:

- Verify that the electrical supply meets all power requirements. See the system specifications for the applicable CTP model.
- Verify that the site meets all environment specifications. Refer to the environmental requirements and the system specifications for the applicable CTP model.
- Verify that the cables you plan to use meet the specifications, and review the cabling recommendations.
- Verify the operation of all telephone circuits, digital services, and T1 facilities required for installation.
- Ensure that all IP requirements are met, such as IP addresses, subnet masks, and any specific routing protocol information.

CTP2000 Environmental Requirements

See one of the following topics for complete environmental specifications:

- "CTP2008 Platform Specifications and Certification" on page 39
- "CTP2024 Platform Specifications and Certification" on page 42
- "CTP2056 Platform Specifications and Certification" on page 45

Choose a location for the device that is dry, relatively dust free, well ventilated, and air conditioned. If you install equipment in a rack, be sure that the floor is capable of supporting the combined weight of the rack and the installed equipment. Place the device in a location with sufficient access to power and network cables.

Like other network devices, the device generates a significant amount of heat. You must provide a balanced environment so that the device performs properly and safely. See the individual system specifications for acceptable ranges of temperature and humidity.

Be sure to allow enough space around the device for adequate ventilation. Inadequate ventilation can cause the device to overheat.



CAUTION: Do not block the air vents on the device. Otherwise, the device might overheat.

RELATED DOCUMENTATION

Before You Install a CTP Platform | 49

CHAPTER 5

Equipment Rack Requirements

IN THIS CHAPTER

- CTP2000 Rack Requirements | 51
- CTP2000 Mechanical Requirements | 52
- CTP2000 Space Requirements | 52
- CTP2000 Rack Installation | 53
- CTP Cabling Recommendations | 53

CTP2000 Rack Requirements

When allocating equipment rack space, consider the following:

- Type of equipment racks recommended for the system
- Number of equipment racks required to hold your current system configuration
- Future expansion

Make sure that your distribution rack meets basic mechanical and space requirements and complies with conventional standards. In the United States, use *EIA-310-D Cabinets, Racks, Panels, and Associated Equipment, September 1992*.

RELATED DOCUMENTATION

CTP2000 Mechanical Requirements | 52

CTP2000 Space Requirements | 52

CTP2000 Rack Installation | 53

CTP2000 Mechanical Requirements

Follow these mechanical requirements for your rack:

- Select from the following rack options:
  - Two-post rack—a freestanding enclosed cabinet with two mounting posts in the front
  - Telco-type rack—two adjacent mounting posts that you must secure to the floor or an overhead structure
  - Four-post rack—a freestanding open rack, either open or closed
- The rack must have at least two mounting posts.
- The distance between the mounting holes in the two posts must be 18.31 in. +/-.063 in., as specified in the EIA-310-D document.
- A fully loaded rack with three CTP2056 systems must structurally support at least 100 lb (46 kg).
- An optional mounting kit is available for midchassis mounting. Contact your Juniper Networks sales representative for more information.

RELATED DOCUMENTATION

CTP2000 Rack Requirements | 51
CTP2000 Space Requirements | 52
CTP2000 Rack Installation | 53

CTP2000 Space Requirements

If you use an enclosed rack for the device, ensure that there is a minimum of 3 in. of clearance between the inner side wall and the system. This clearance space ensures adequate air flow.

RELATED DOCUMENTATION

CTP2000 Rack Requirements | 51
CTP2000 Mechanical Requirements | 52
CTP2000 Rack Installation | 53

CTP2000 Rack Installation

To confirm proper equipment rack installation, verify the following:

- Racks are installed and electrically grounded according to manufacturer instructions.
- Equipment racks are anchored to the floor and, when possible, anchored to the ceiling as well.
- Equipment rack installations comply with applicable local, state, and national codes.

RELATED DOCUMENTATION

CTP2000 Mechanical Requirements | **52**

CTP2000 Rack Requirements | **51**

CTP2000 Space Requirements | **52**

Special Guidelines for Installing CTP2056 Chassis in a Rack | **109**

CTP Cabling Recommendations

We suggest that you comply with the following recommendations:

- Ensure that cable distance and rate limits meet IEEE-recommended maximum speeds and distances for signaling purposes. For information about attenuation and power loss in optical fiber cables see:
  - ANSI T1.646a-1997 Telecommunications – Broadband ISDN - Physical Layer Specification for User-Network Interfaces Including DS1/ATM (1997)
  - ANSI T1.646-1995 Telecommunications – Broadband ISDN - Physical Layer Specification for User-Network Interfaces Including DS1/ATM (1995)
- Ensure that power cables deliver sufficient power to the device.
- Attach laser fiber connectors only to Class 1 laser devices in accordance with IEC 60825-1, Safety of Laser Products - Part 1.
- Route cables so that they do not restrict ventilation or airflow.
- Route cables so that modules and field-replaceable units are easily accessible.
- Route cables in a logical direction to prevent loss of connectivity to other equipment in the rack, associated equipment in adjacent racks, or to the backbone network.

- Consider using cable-management brackets to keep network cables untangled and orderly and to prevent cables from hindering access to other slots.

For additional cable recommendations, consult the document *GR-63–CORE: Network Equipment Building System (NEBS) Requirements: Physical Protection, Issue 2, April 2002*.

CHAPTER 6

Cable and Pinout Specifications

IN THIS CHAPTER

- CTP2000 4WE&M Interface Connector Pinouts | 55
- CTP2000 FXS and FXO Interface Module Cables and Pinouts | 59
- T1/E1 Interface Module Pinouts | 63
- CTP2000 Serial Interface Module Pinouts | 64
- CTP2000 Series Console Cable Pinouts | 79
- CTP Fast Ethernet and Power Cables | 85
- Terminal Block and Circuit Breaker Specifications | 85

CTP2000 4WE&M Interface Connector Pinouts

IN THIS SECTION

- CTP2000 4WE&M RTM Connector A Pinouts | 55
- CTP2000 4WE&M Connector B Pinouts | 57

CTP2000 4WE&M RTM Connector A Pinouts

See Table 11 on page 56 for connector A pinout information. See "CTP2000 4WE&M Interface Module" on page 16 for signal definitions.

Table 11: CTP2000 4WE&M RTM Pinouts–Connector A

Connector A			
Pin	Signal	Signal	Pin
1	Port 0 R	Port 0 T	26
2	Port 0 R1	Port 0 T1	27
3	Port 0 SG	Port 0 E	28
4	Port 0 SB	Port 0 M	29
5	Port 1 R	Port 1 T	30
6	Port 2 R1	Port 1 T1	31
7	Port 2 SG	Port 1 E	32
8	Port 2 SB	Port 1 M	33
9	Port 2 R	Port 2 T	34
10	Port 2 R1	Port 2 T1	35
11	Port 2 SG	Port 2 E	36
12	Port 2 SB	Port 2M	37
13	Port 3 R	Port 3 T	38
14	Port 3 R1	Port 3 T1	39

Table 11: CTP2000 4WE&M RTM Pinouts–Connector A *(Continued)*

Connector A			
Pin	Signal	Signal	Pin
15	Port 3 SG	Port 3 E	40
16	Port 3 SB	Port 3 M	41
25	GND	GND	50

CTP2000 4WE&M Connector B Pinouts

See Table 12 on page 57 for connector B pinout information. See"CTP2000 4WE&M Interface Module" on page 16 for signal definitions.

Table 12: CTP2000 4WE&M RTM Pinouts–Connector B

Connector B			
PIN	Signal	Signal	PIN
1	Port 4 R	Port 4 T	26
2	Port 4 R1	Port 4 T1	27
3	Port 4 SG	Port 4 E	28
4	Port 4 SB	Port 4 M	29
5	Port 5 R	Port 5 T	30
6	Port 5 R1	Port 5 T1	31

Table 12: CTP2000 4WE&M RTM Pinouts–Connector B *(Continued)*

Connector B			
PIN	Signal	Signal	PIN
7	Port 5 SG	Port 5 E	32
8	Port 5 SB	Port 5 M	33
9	Port 6 R	Port 6 T	34
10	Port 6 R1	Port 6 T1	35
11	Port 6 SG	Port 6 E	36
12	Port 6 SB	Port 6M	37
13	Port 7 R	Port 7 T	38
14	Port 7 R1	Port 7 T1	39
15	Port 7 SG	Port 7 E	40
16	Port 7 SB	Port 7 M	41
25	GND	GND	50

RELATED DOCUMENTATION

CTP2000 4WE&M Interface Module | **16**

CTP2000 FXS and FXO Interface Module Cables and Pinouts | **59**

CTP2000 Series Console Cable Pinouts | **79**

CTP2000 FXS and FXO Interface Module Cables and Pinouts

IN THIS SECTION

- Required Cables | 59
- RTM Pinout Locations | 59
- FXS Connector Pinouts | 60
- FXO Connector Pinouts | 62

Required Cables

The CTP2000 2W-FXS and 2W-FX0 interface modules require the use of double-shielded cables (copper braid plus aluminum mylar foil) to ensure EMI Compliance.

RTM Pinout Locations

Figure 29 on page 60 shows the pinout locations for both the CTP2000 2W-FXS and 2W-FXO interface modules.

Figure 29: RTM Pinouts for CTP2000 2W-FXS and 2W-FXO Interface Modules

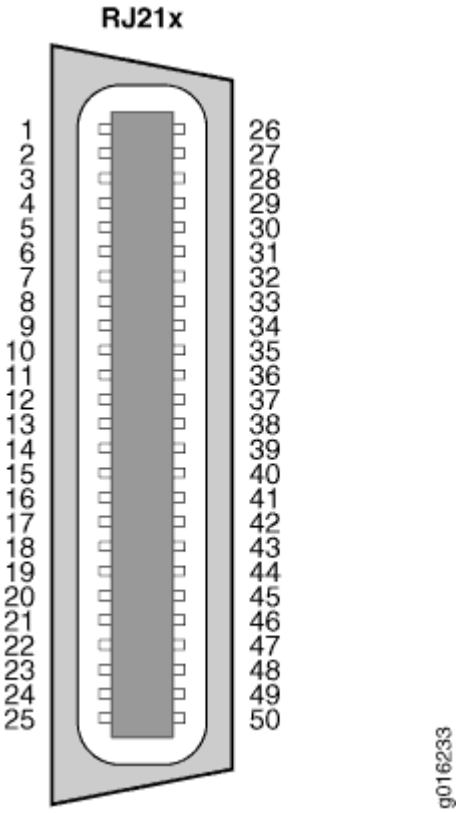

FXS Connector Pinouts

The RTM for the CTP2000 2W-FXS interface module uses a RJ-21 25-pair Telco connector labeled *A*. The A connector has 24 FXS ports.

FXS R is connected to FXO T; FXS T is connected to FXO T.

Table 13 on page 60 lists the RTM pinouts for the FXS module.

Table 13: CTP2000 FXS Connector Pinouts on the RTM

Pin	Signal	Signal	Pin
1	Port 0 R	Port 0 T	26
2	Port 1 R	Port 1 T	27

Table 13: CTP2000 FXS Connector Pinouts on the RTM *(Continued)*

Pin	Signal	Signal	Pin
3	Port 2 R	Port 2 T	28
4	Port 3 R	Port 3 T	29
5	Port 4 R	Port 4 T	30
6	Port 5 R	Port 5 T	31
7	Port 6 R	Port 6 T	32
8	Port 7 R	Port 7 T	33
9	Port 8 R	Port 8 T	34
10	Port 9 R	Port 9 T	35
11	Port 10 R	Port 10 T	36
12	Port 11 R	Port 11 T	37
13	Port 12 R	Port 12 T	38
14	Port 13 R	Port 13 T	39
15	Port 14 R	Port 14 T	40
16	Port 15 R	Port 15 T	41
17	Port 16 R	Port 16 T	42

Table 13: CTP2000 FXS Connector Pinouts on the RTM *(Continued)*

Pin	Signal	Signal	Pin
18	Port 17 R	Port 17 T	43
19	Port 18 R	Port 18 T	44
20	Port 19 R	Port 19 T	45
21	Port 20 R	Port 20 T	46
22	Port 21 R	Port 21 T	47
23	Port 22 R	Port 22 T	48
24	Port 23 R	Port 23 T	49

FXO Connector Pinouts

The RTM for the CTP2000 2W-FXO interface module uses a RJ-21 25-pair Telco connector labeled *A*. The A connector has 24 FXS ports.

FXO T is connected to FXS R; FXO T is connected to FXS T.

Table 14 on page 62 lists the RTM pinouts for the FXO module.

Table 14: CTP2000 FXO Connector Pinouts on the RTM

Pin	Signal	Signal	Pin
1	Port 0 T	Port 0 R	26
3	Port 1 T	Port 1 R	28
5	Port 2 T	Port 2 R	30

Table 14: CTP2000 FXO Connector Pinouts on the RTM *(Continued)*

Pin	Signal	Signal	Pin
7	Port 3 T	Port 3 R	32
9	Port 4 T	Port 4 R	34
11	Port 5 T	Port 5 R	36
13	Port 6 T	Port 6 R	38
15	Port 7 T	Port 7 R	40
17	Port 8 T	Port 8 R	42
19	Port 9 T	Port 9 R	44
21	Port 10 T	Port 10 R	46
23	Port 11 T	Port 11 R	48

RELATED DOCUMENTATION

CTP2000 2W-FXS and 2W-FXO Interface Modules | **24**

CTP2000 4WE&M Interface Connector Pinouts | **55**

CTP2000 Series Console Cable Pinouts | **79**

CTP Fast Ethernet and Power Cables | **85**

T1/E1 Interface Module Pinouts

Table 15 on page 64 lists the T1/E1 interface module pinouts for the RJ-45 connector.

Table 15: T1/E1 Interface Module—RJ-45 Connector Pinout

RJ-45 Pin	Signal
1	RX Ring
2	RX Tip
3	–
4	TX Ring
5	TX Tip
6	–
7	–
8	–

RELATED DOCUMENTATION

- CTP2000 T1/E1 Interface Module | **14**
- CTP2000 FXS and FXO Interface Module Cables and Pinouts | **59**
- CTP2000 Series Console Cable Pinouts | **79**
- Cabling a CTP2000 T1/E1 Interface Module | **129**

CTP2000 Serial Interface Module Pinouts

Figure 30 on page 65 displays the serial DCE/DTE cable pin configurations for CTP2000 series devices.

Figure 30: CTP2000 Serial DCE/DTE Cable Pin Configurations

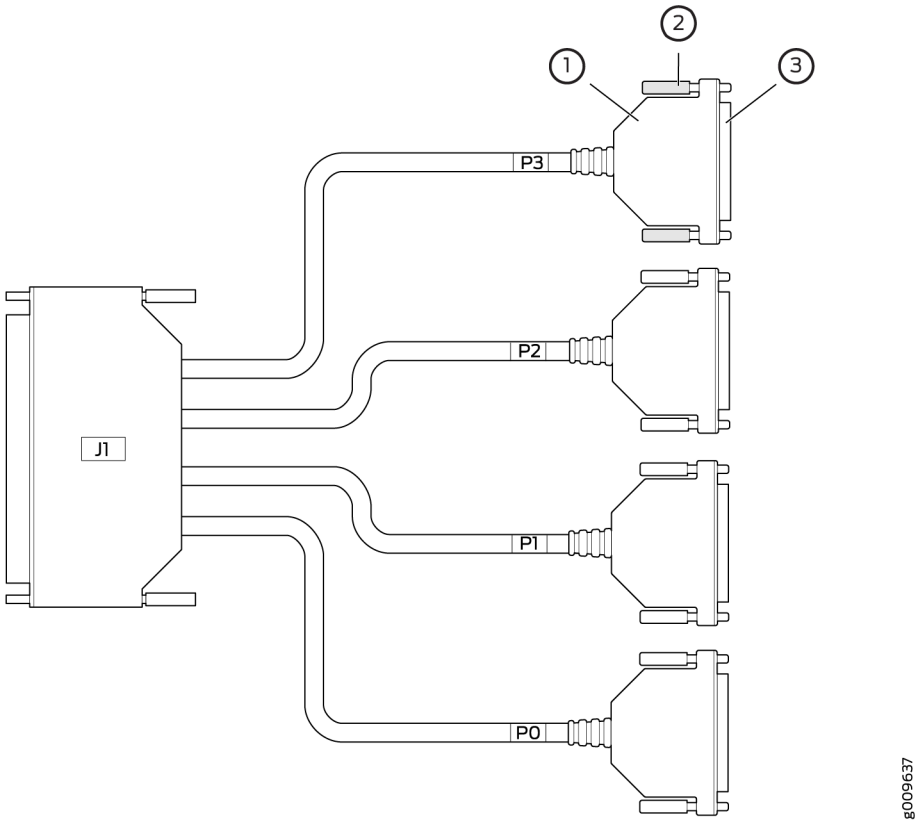

1– DB-25 shell	3– DB-25 connector
2– Thumb screw	

Table 16 on page 65 lists the CTP2000 serial DCE cable pinouts.

Table 16: CTP2000 Serial DCE Cable Pinouts

Cable	J1 SCSI	DB-25
P0	1	P0-2
	51	P0-14
	2	P0-20
	52	P0-23

Table 16: CTP2000 Serial DCE Cable Pinouts *(Continued)*

Cable	J1 SCSI	DB-25
	3	P0-4
	53	P0-19
	4	P0-15
	54	P0-12
	5	P0-16
	55	P0-3
	6	P0-22
	56	P0-6
	7	P0-13
	57	P0-5
	8	P0-8
	58	P0-25
	9	P0-9
	59	P0-10
	10	P0-18

Table 16: CTP2000 Serial DCE Cable Pinouts *(Continued)*

Cable	J1 SCSI	DB-25
	60	P0-17
	11	P0-24
	61	P0-11
	12	P0-7
	62	P0-21
	63	P0-1
P1	13	P1-14
	64	P1-2
	14	P1-23
	65	P1-20
	15	P1-19
	66	P1-4
	16	P1-12
	67	P1-15
	17	P1-3

Table 16: CTP2000 Serial DCE Cable Pinouts *(Continued)*

Cable	J1 SCSI	DB-25
	68	P1-16
	18	P1-6
	69	P1-22
	19	P1-5
	70	P1-13
	20	P1-25
	71	P1-8
	21	P1-10
	72	P1-9
	22	P1-17
	73	P1-18
	23	P1-11
	74	P1-24
	24	P1-21
	75	P1-7

Table 16: CTP2000 Serial DCE Cable Pinouts *(Continued)*

Cable	J1 SCSI	DB-25
	25	P1-1
P2	26	P2-2
	76	P2-14
	27	P2-20
	77	P2-23
	28	P2-4
	78	P2-19
	29	P2-15
	79	P2-12
	30	P2-16
	80	P2-3
	31	P2-22
	81	P2-6
	32	P2-13
	82	P2-5

Table 16: CTP2000 Serial DCE Cable Pinouts *(Continued)*

Cable	J1 SCSI	DB-25
	33	P2-8
	83	P2-25
	34	P2-9
	84	P2-10
	35	P2-18
	85	P2-17
	36	P2-24
	86	P2-11
	37	P2-7
	87	P2-21
	88	P2-1
P3	38	P3-14
	89	P3-2
	39	P3-23
	90	P3-20

Table 16: CTP2000 Serial DCE Cable Pinouts *(Continued)*

Cable	J1 SCSI	DB-25
	40	P3-19
	91	P3-4
	41	P3-12
	92	P3-15
	42	P3-3
	93	P3-16
	43	P3-6
	94	P3-22
	44	P3-5
	95	P3-13
	45	P3-25
	96	P3-8
	46	P3-10
	97	P3-9
	47	P3-17

Table 16: CTP2000 Serial DCE Cable Pinouts *(Continued)*

Cable	J1 SCSI	DB-25
	98	P3-18
	48	P3-11
	99	P3-24
	49	P3-21
	100	P3-7
	50	P3-1

Table 17 on page 72 lists the CTP2000 serial DTE cable pinouts.

Table 17: CTP2000 Serial DTE Cable Pinouts

Cable	J1 SCSI	DB-25
P0	1	P0-3
	51	P0-16
	2	P0-6
	52	P0-22
	3	P0-5
	53	P0-13
	4	P0-15

Table 17: CTP2000 Serial DTE Cable Pinouts *(Continued)*

Cable	J1 SCSI	DB-25
	54	P0-12
	5	P0-14
	55	P0-2
	6	P0-23
	56	P0-20
	7	P0-19
	57	P0-4
	8	P0-8
	58	P0-21
	9	P0-11
	59	P0-10
	10	P0-18
	60	P0-24
	11	P0-17
	61	P0-9

Table 17: CTP2000 Serial DTE Cable Pinouts *(Continued)*

Cable	J1 SCSI	DB-25
	12	P0-7
	62	P0-25
	63	P0-1
P1	13	P1-16
	64	P1-3
	14	P1-22
	65	P1-6
	15	P1-13
	66	P1-5
	16	P1-12
	67	P1-15
	17	P1-2
	68	P1-14
	18	P1-20
	69	P1-23

Table 17: CTP2000 Serial DTE Cable Pinouts *(Continued)*

Cable	J1 SCSI	DB-25
	19	P1-4
	70	P1-19
	20	P1-21
	71	P1-8
	21	P1-10
	72	P1-11
	22	P1-24
	73	P1-18
	23	P1-9
	74	P1-17
	24	P1-25
	75	P1-7
	25	P1-1
P2	26	P2-3
	76	P2-16

Table 17: CTP2000 Serial DTE Cable Pinouts *(Continued)*

Cable	J1 SCSI	DB-25
	27	P2-6
	77	P2-22
	28	P2-5
	78	P2-13
	29	P2-15
	79	P2-12
	30	P2-14
	80	P2-2
	31	P2-23
	81	P2-20
	32	P2-19
	82	P2-4
	33	P2-8
	83	P2-21
	34	P2-11

Table 17: CTP2000 Serial DTE Cable Pinouts *(Continued)*

Cable	J1 SCSI	DB-25
	84	P2-10
	35	P2-18
	85	P2-24
	36	P2-17
	86	P2-9
	37	P2-7
	87	P2-25
	88	P2-1
P3	38	P3-16
	89	P3-3
	39	P3-22
	90	P3-6
	40	P3-13
	91	P3-5
	41	P3-12

Table 17: CTP2000 Serial DTE Cable Pinouts *(Continued)*

Cable	J1 SCSI	DB-25
	92	P3-15
	42	P3-2
	93	P3-14
	43	P3-20
	94	P3-23
	44	P3-4
	95	P3-19
	45	P3-21
	96	P3-8
	46	P3-10
	97	P3-11
	47	P3-24
	98	P3-18
	48	P3-9
	99	P3-17

Table 17: CTP2000 Serial DTE Cable Pinouts *(Continued)*

Cable	J1 SCSI	DB-25
	49	P3-25
	100	P3-7
	50	P3-1

RELATED DOCUMENTATION

- CTP2000 Serial Interface Modules | **13**
- Cabling the CTP2000 Platform Overview | **126**
- CTP2000 FXS and FXO Interface Module Cables and Pinouts | **59**
- CTP2000 Series Console Cable Pinouts | **79**

CTP2000 Series Console Cable Pinouts

The console port CTP2008, CTP2024, and CTP2056 devices with the new PP833 processor uses a USB-type connector located on the right of the PP833 faceplate labelled “RS-232”. CTP2000 series devices with the PP310 and PP332 processors use an RJ-45 connected to the **COM2** port. This cable must be connected during the first boot process. Use a shielded cable for the **COM2** port on the CTP2056 device. Figure 31 on page 80 displays the console cable pin configurations for CTP2000 series devices with the PP310 and PP332 processors. On the left is the RJ-45 connector, and on the right is the DB-9 connector with the pin numbering indicated.

The console connections are configured to the following parameters:

- Speed: 9600 bps
- Data bits: 8
- Stop bits: 1
- Flow control: Xon/Xoff
- Parity: none

Figure 31: CTP2000 Series Console Cable Pin Configurations for PP310 and PP332 Processors

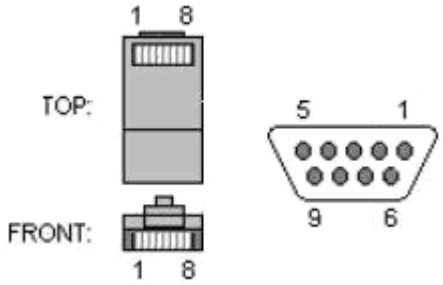

Table 18 on page 80 and Table 19 on page 80 list console cable pinouts for CTP2000 Series devices based on the pin configurations.

Table 18: CTP2000 Series Console Cable Pinouts for PP310 and PP332 Processors

CTP RJ-45 Pin	Console DB-9 Pin
1 RTS	8 CTS
2 DTR	6 DSR
3 TXD	5 GND
4 GND	2 RXD
5 GND	3 TXD
6 (tied to pin 7) RXD	1 DCD
7 DSR	4 DTR
8 CTS	7 RTS

Table 19: CTP2000 Series Console Cable (p/n 720-071594) Pinouts for the PP833 Processor

USB Console Connector	DB-9 plug
2 RXD	3 TXD

Table 19: CTP2000 Series Console Cable (p/n 720-071594) Pinouts for the PP833 Processor *(Continued)*

USB Console Connector	DB-9 plug
3 TXD	2 RXD
4 GND	5 GND

Table 20: DB9-to-RJ45 Adapter (p/n 450-071855) Pinouts for Connecting PP833 Processor with Console

RJ-45	DB-9
3 TXD	5 GND
4 GND	3 TXD
5 GND	2 RXD

Table 21: DB9-to-RJ45 Adapter (p/n 720-056657) Pinouts to Convert PP833 Console to CTP150 Console Pinout

RJ-45	DB-9
1 RTS	7 RTS
2 DTR	4 DTR
3 TXD	3 TXD
4 GND	5 GND
6 RXD	2 RXD
7 DSR	6 DSR

Table 21: DB9-to-RJ45 Adapter (p/n 720-056657) Pinouts to Convert PP833 Console to CTP150 Console Pinout *(Continued)*

RJ-45	DB-9
8 CTS	8 CTS

Table 22: DB9-to-RJ45 Adapter (p/n 720-014126) Pinouts for Connecting PP833 Processor with a PC

RJ-45	DB-9
1 RTS	8 CTS
2 DTR	6 DSR
3 TXD	2 RXD
4 GND	5 GND
6 RXD	3 TXD
7 DSR	4 DTR
8 CTS	7 RTS

You can connect a console (PC, Macintosh, or UNIX workstation) directly to the COM2 port on the PP310 and PP332 processors. On the PP833 processor, a console is connected using the supplied USB-to-DB9 cable (p/n 720-071594), in which the DB-9 connector has the same pinout as a standard RS-232 DTE port. When the USB-to-DB9 cable is used in conjunction with the DB-9 adapter labelled “p/n 450-071855” (see Figure 32 on page 83), the available RJ-45 console pinout will be the same as the console connection on the RTM of PP332/PP310 processor.

Alternatively, if the DB-9 adapter from the bag labelled “p/n 720-056657” (see Figure 33 on page 83) is used instead of “p/n 450-071855”, the available RJ-45 console pinout will be similar to the CTP150 console port (and other Juniper routers). To connect the PP833 processor with the DB-9 plug serial port of a PC, additionally connect a straight RJ-45 cable with the DB-9 adapter from the bag labelled “p/n 720-056657”. The other end of the RJ-45 cable connects to the DB-9 adapter from the bag labelled “p/n 720-014126” (see Figure 34 on page 84). Then, you can connect the PC’s DB-9 plug connector with the DB-9 adapter “p/n 720-014126”.

Figure 32: Upgrading from PP310/PP332 Processor to PP833 Processor

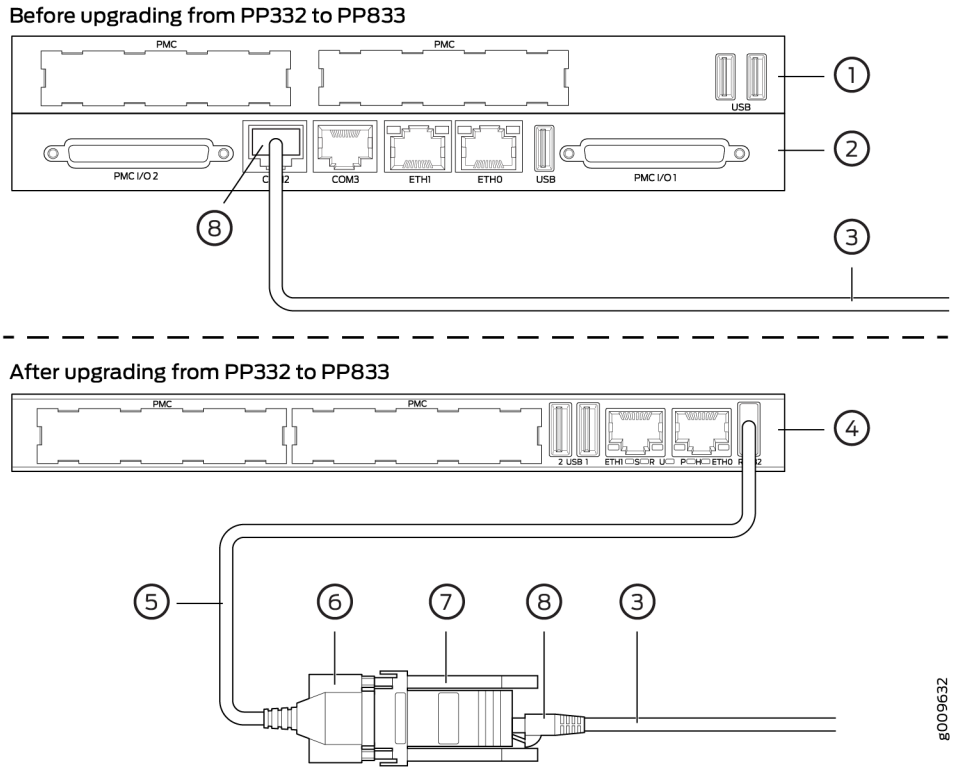

1– PP332 front panel	5– Cable 720-071594
2– PP332 RTM panel	6– DB-9 plug end of 720-071594
3– User's existing console cable	7– Adapter 450-071855
4– PP833 front panel	8– RJ-45 plug end of user's existing console cable

Figure 33: Connecting the PP833 Processor with the RJ-45 Serial Console

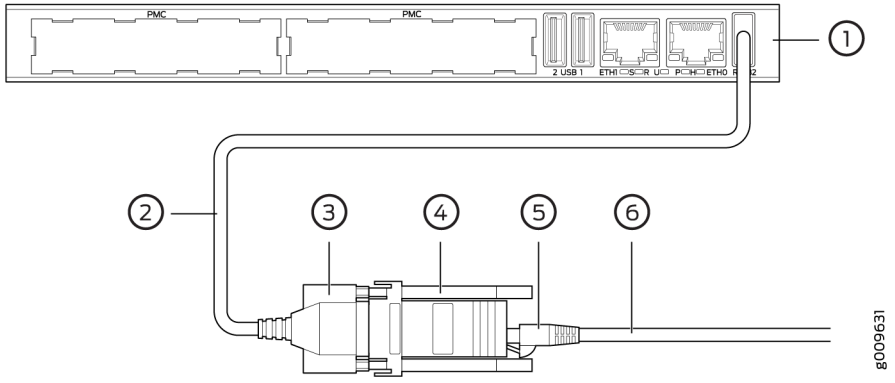

1– PP833 front panel	4– Adapter from the bag labelled 720-056657
2– Cable 720-071594	5– RJ-45 plug end of user's console cable
3– DB-9 plug end of 720-071594	6– User's cable that connects to the console on a CTP150 or other Juniper product

Figure 34: Connecting the PP833 Processor with the PC DB-9M Serial Console

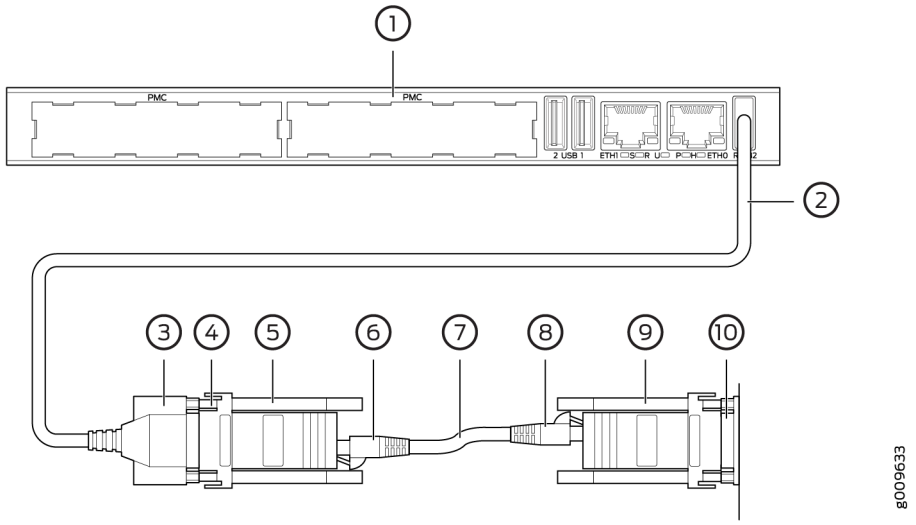

1– PP833 front panel	6– RJ-45 plug end
2– Cable 720-071594	7– Straight RJ-45 cable
3– DB-9 plug end of 720-071594	8– RJ-45 plug end
4– DB-9 socket end of adapter from the bag labelled 720-056657	9– Adapter from the bag labelled 720-014126
5– Adapter from the bag labelled 720-056657	10– DB-9 plug end of PC

RELATED DOCUMENTATION

CTP2000 Console Port Setup | **142**

CTP Fast Ethernet and Power Cables | **85**

CTP Fast Ethernet and Power Cables

IN THIS SECTION

- Fast Ethernet Cables | 85
- DC Power Cables | 85

Fast Ethernet Cables

The Ethernet connection is a standard RJ-45 connector. Typically, a straight-through cable is used to connect to a switch, and a crossover cable is used to connect to a router.

DC Power Cables

For CTP chassis with DC power options, we recommend 18-AWG power cables.

RELATED DOCUMENTATION

- Required Tools, Wires, and Cables for the CTP2000 Platform | 127
- Cabling the CTP Platform for DC Power | 129
- Terminal Block and Circuit Breaker Specifications | 85

Terminal Block and Circuit Breaker Specifications

Table 23 on page 85 lists the electrical specifications for the terminal block (see Figure 35 on page 86) located on the back of the CTP2000 Series DC chassis.

Table 23: Terminal Block Electrical Specifications

Category	Specification
Voltage	100 VDC

Table 23: Terminal Block Electrical Specifications *(Continued)*

Category	Specification
Current	20 A
Operating Temperature	−55° through 105° C
Material	Black thermoplastic or equivalent
Capacitance	Minimum: 2500 pF Maximum: 5200 pF

Figure 35: Terminal Block

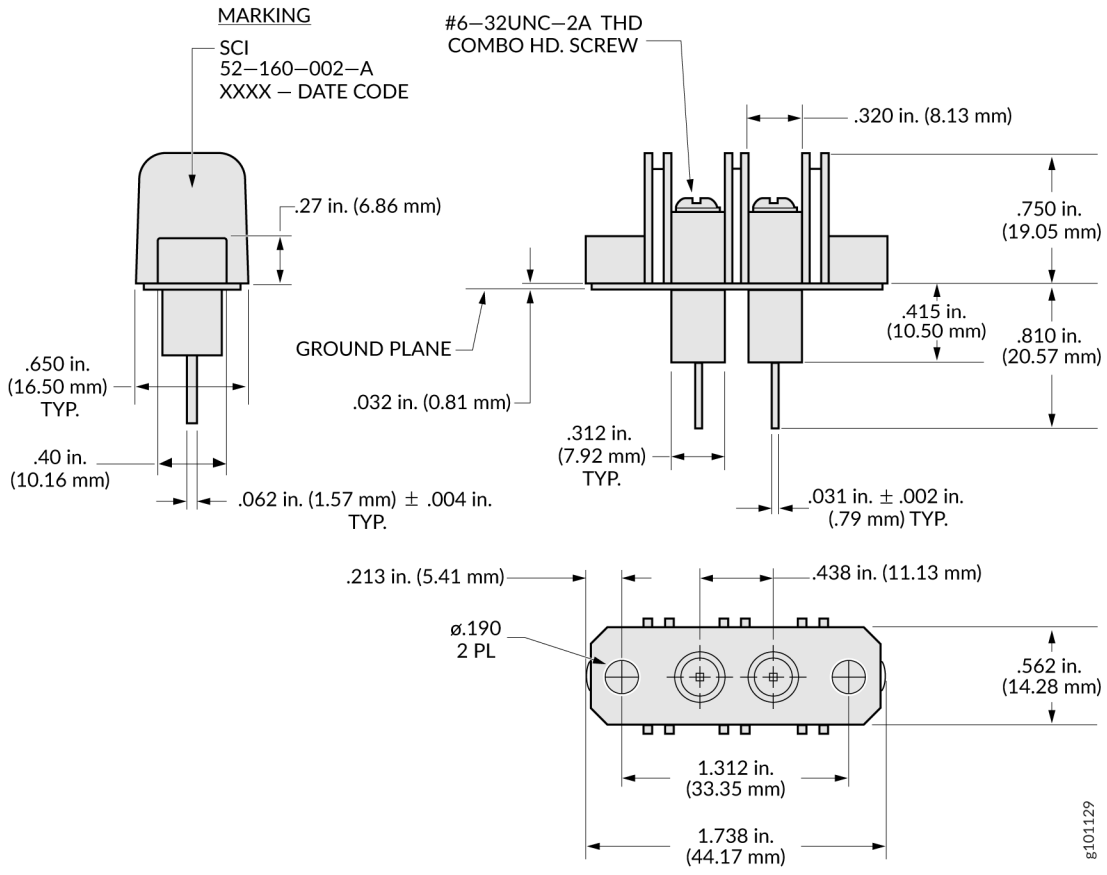

Table 24 on page 87 summarizes the electrical specification for the circuit breaker that is attached on the back of the CTP2000 Series DC chassis.

Table 24: Circuit Breaker Specification

Platform	Specification
CTP2008-DC	8 A
CTP2024-DC	15 A
CTP2056-DC	15 A

RELATED DOCUMENTATION

- Required Tools, Wires, and Cables for the CTP2000 Platform | **127**
- Cabling the CTP Platform for DC Power | **129**
- CTP Fast Ethernet and Power Cables | **85**

3

PART

Safety

General Safety Guidelines and Warnings | 89

Module Installation Safety Guidelines and Warnings | 91

Hardware Compliance | 93

CHAPTER 7

General Safety Guidelines and Warnings

IN THIS CHAPTER

- CTP Safety Guidelines and Warnings | 89

CTP Safety Guidelines and Warnings

IN THIS SECTION

- Compliance Statement for Argentina | 90

For your safety, before installing the device, review all safety warnings in this section.



WARNING: The recommended maximum ambient temperature is 40°°C (104° F). For safe operation take into consideration the internal temperature within the rack.



WARNING: Install equipment in the rack from the bottom upward. Doing this helps maintain the stability of the rack and reduces the chance of the rack tipping over.



WARNING: Do not insert any metal object, such as a screwdriver, into an open slot or the backplane. Doing so can cause electric shock and serious burns.



WARNING: For the larger CTP series devices, three people are required to install the device in a rack: two to lift the device into position and one to screw it to the rack.

WARNING: Connect the device or rack to ground (earth), and ensure that a reliable grounding path is maintained in the rack.

WARNING: Do not work on the device or connect or disconnect cables during lightning activity.

WARNING: Be sure that circuit breakers for the power source are in the OFF position before attaching power cables.

WARNING: Before servicing the device, turn off the power.

WARNING: Remove jewelry (including rings, necklaces, and watches) before working on equipment that is connected to power lines. Metal objects heat up when connected to power and ground and can cause serious burns or become welded to the terminals.

CAUTION: Evaluate the overall loading of the branch circuit before you install any equipment into a rack.

Compliance Statement for Argentina

EQUIPO DE USO IDÓNEO.

RELATED DOCUMENTATION

Federal Communications Commission (FCC) Statement | **95**

FCC Requirements for Consumer Products | **95**

Food and Drug Administration, Center for Devices and Radiological Health | **96**

Compliance with Canadian Regulations | **96**

Before You Install a CTP Platform | **49**

CHAPTER 8

Module Installation Safety Guidelines and Warnings

IN THIS CHAPTER

- Safety Guidelines and Warnings for Installing CTP Modules | 91

Safety Guidelines and Warnings for Installing CTP Modules

Before and during the installation process, observe the following warnings:

WARNING: Do not work on the device or connect or disconnect cables during lightning activity.

WARNING: Be sure circuit breakers for the power source are in the OFF position before attaching power cables.

WARNING: Remove jewelry (including rings, necklaces, and watches) before working on equipment that is connected to power lines. Metal objects heat up when connected to power and ground and can cause serious burns or become welded to the terminals.

WARNING: Do not insert any metal object, such as a screwdriver, into an open slot or the midplane. Doing so can cause electric shock and serious burns.

WARNING: Never attempt to repair parts of modules yourself. Only trained customer service personnel are authorized to service parts. Call Juniper Networks Customer Service to make arrangements to return defective modules for repair.

RELATED DOCUMENTATION

Required Tools and Safety Items for Installing CTP150 Modules

Federal Communications Commission (FCC) Statement | **95**

FCC Requirements for Consumer Products | **95**

Food and Drug Administration, Center for Devices and Radiological Health | **96**

Compliance with Canadian Regulations | **96**

CHAPTER 9

Hardware Compliance

IN THIS CHAPTER

- Declaration of Conformity for CTP2000 Platforms | 93
- Federal Communications Commission (FCC) Statement | 95
- FCC Requirements for Consumer Products | 95
- Food and Drug Administration, Center for Devices and Radiological Health | 96
- Compliance with Canadian Regulations | 96
- Statements of Volatility for Juniper Network Devices | 99

Declaration of Conformity for CTP2000 Platforms

Figure 36 on page 94 shows the Declaration of Conformity for the CTP2000 platforms.

Figure 36: CTP2000 Declaration of Conformity



Declaration of Conformity

Juniper Networks, Inc.
10 Technology Park Drive
Westford, MA 01886 USA

declares that under our sole responsibility the product(s)

Circuit-to-Packet Network Device
Model CTP2000 Series

are in conformity with the provisions of the following EC Directives, including all amendments, and with national legislation implementing these directives:

Low Voltage Directive 73/23/EEC
EMC Directive 89/336/EEC

and that the following harmonized standards have been applied

EN 60950-1:2001+A11
EN 60825-1:1994+A1+A2

EN 300 386 V1.3.3:2005
EN 55024:1998 +A1 + A2
EN 55022:1998+A1(2000)+A2(2003) Class A

Susanne Delisle

Place	Signature	Date
Westford, MA, USA	Susanne Delisle	06/20/2007

RELATED DOCUMENTATION

CTP2008 Platform Specifications and Certification | 39
CTP2024 Platform Specifications and Certification | 42
CTP2056 Platform Specifications and Certification | 45

Federal Communications Commission (FCC) Statement

This equipment has been tested and found to comply with the limits for a Class A digital device, pursuant to Part 15 of the FCC Rules. These limits are designed to provide reasonable protection against harmful interference when the equipment is operated in a commercial environment. This equipment generates, uses, and can radiate radio frequency energy and, if not installed and used in accordance with the instruction manual, may cause harmful interference to radio communications. Operation of this equipment in a residential area is likely to cause harmful interference in which case the user will be required to correct the interference at their own expense.

This equipment is designed for use with properly shielded and terminated cables. Refer to the installation sections of this manual before operation.

Reference: CFR 47, Part 15J, Sect 15.105 April 18, 1989

Caution: Changes or modifications to this equipment not expressly approved by the party responsible for compliance could void the user's authority to operate the equipment.

RELATED DOCUMENTATION

FCC Requirements for Consumer Products | 95
Food and Drug Administration, Center for Devices and Radiological Health | 96
Compliance with Canadian Regulations | 96

FCC Requirements for Consumer Products

This equipment complies with FCC rules, Part 68. On the back side of this equipment is a label that contains, among other information, the FCC Registration Number and Ringer Equivalence Number (REN) for this equipment. If requested, provide this information to your telephone company.

If this equipment causes harm to the telephone network, the telephone company may discontinue your service temporarily. If possible, they will notify you in advance. But if advance notice is not practical, you will be notified as soon as possible. You will be advised of your right to file a complaint with the FCC.

Your telephone company may make changes in its facilities, equipment, operations, or procedures that could affect the proper operation of your equipment. If they do, you will be given advance notice to give you an opportunity to maintain uninterrupted service.

If you experience trouble with this equipment, please contact the manufacturer for warranty/repair information. The telephone company may ask that you disconnect this equipment from the network until the problem has been corrected or until you are sure that the equipment is not malfunctioning.

RELATED DOCUMENTATION

- Federal Communications Commission (FCC) Statement | 95
- Food and Drug Administration, Center for Devices and Radiological Health | 96
- Compliance with Canadian Regulations | 96

Food and Drug Administration, Center for Devices and Radiological Health

This equipment complies with 21 CFR 1040.10 and 1040.11 for the safe use of lasers.

RELATED DOCUMENTATION

- Federal Communications Commission (FCC) Statement | 95
- FCC Requirements for Consumer Products | 95
- Compliance with Canadian Regulations | 96

Compliance with Canadian Regulations

IN THIS SECTION

- Industry Canada Notice | 97
- Canadian Department of Communications Explanatory Notes | 98

Industry Canada Notice

Industry Canada Notice CS-03

The Industry Canada label identifies certified equipment. This certification means that the equipment meets certain telecommunications network protective, operation and safety requirements as prescribed in the appropriate Terminal Equipment Technical Requirements document(s). The Department does not guarantee that the equipment will operate to the user's satisfaction. Before installing this equipment, users should ensure that it is permissible to be connected to the facilities of the local telecommunications company. The equipment must also be installed using an acceptable method of connection. The customer should be aware that compliance with the above conditions may not prevent degradation of service in some situations.

Repairs to certified equipment should be coordinated by a representative designated by the supplier. Any repairs or alterations made by the user to this equipment, or equipment malfunctions, may give the telecommunications company cause to request the user to disconnect the equipment.

Users should ensure for their own protection that the electrical ground connections of the power utility, telephone lines and internal metallic water pipe system, if present, are connected together. This precaution may be particularly important in rural areas.

Caution: Users should not attempt to make such connections themselves, but should contact the appropriate electric inspection authority, or electrician, as appropriate.

Notice: The Ringer Equivalence Number (REN) assigned to each terminal device provides an indication of the maximum number of terminals allowed to be connected to a telephone interface. The termination on an interface may consist of any combination of devices subject only to the requirement that the sum of the Ringer Equivalence Numbers of all the devices does not exceed 5.

Avis CS-03 d'Industrie Canada

L'étiquette du ministère des Communications du Canada indique que l'appareillage est certifié, c'est-à-dire qu'il respecte certaines exigences de sécurité et de fonctionnement visant les réseaux de télécommunications. Le ministère ne garantit pas que l'appareillage fonctionnera à la satisfaction de l'utilisateur. Avant d'installer l'appareillage, s'assurer qu'il peut être branché aux installations du service de télécommunications local. L'appareillage doit aussi être raccordé selon des méthodes acceptées. Le client doit toutefois prendre note qu'une telle installation n'assure pas un service parfait en tout temps.

Les réparations de l'appareillage certifié devraient être confiées à un service d'entretien canadien désigné par lefournisseur. En cas de réparation ou de modification effectuées par l'utilisateur ou de mauvais fonctionnement del'appareillage, le service de télécommunications peut demander le débranchment de l'appareillage.

Pour leur propre sécurité, les utilisateurs devraient s'assurer que les mises à la terre des lignes de distribution d'électricité, des lignes téléphoniques et de la tuyauterie métallique interne sont raccordées ensemble. Cette mesure de sécurité est particulièrement importante en milieu rural.

Attention: Les utilisateurs ne doivent pas procéder à ces raccordements eux-mêmes mais doivent plutôt faire appel aux pouvoirs de réglementation en cause ou à un électricien, selon le cas.

Avis: Veuillez prendre note que pour tout appareillage supportant des lignes de type “loopstart,” l'indice d'équivalence de la sonnerie (IES) assigné à chaque dispositif terminal indique le nombre maximal de terminaux qui peuvent être raccordés à une interface. La terminaison d'une interface téléphonique peut consister en une combinaison de quelques dispositifs, à la seule condition que la somme d'indices d'équivalence de la sonnerie de tous les dispositifs n'excède pas 5. Le REN figure sur l'étiquette “FCC Rules Part 68” située sur le support du module ou à l'arrière de l'unité.

Canadian Department of Communications Explanatory Notes

DOC Explanatory Notes: Equipment Attachment Limitations

The Canadian Department of Communications label identifies certified equipment. This certification meets certain telecommunication network protective, operational and safety requirements. The department does not guarantee that the equipment will operate to the users satisfaction.

Before installing the equipment, users should ensure that it is permissible to be connected to the facilities of the local telecommunications company. The equipment must also be installed using an acceptable method of connection. In some cases, the company's inside wiring associated with a single line individual service may be extended by means of a certified connector assembly (telephone extension cord). The customer should be aware that compliance with the above condition may not prevent degradation of service in some situations.

Repairs to certified equipment should be made by an authorized Canadian maintenance facility designated by the supplier. Any repairs or alterations made by the user to this equipment, or equipment malfunctions, may give the telecommunications company cause to request the user to disconnect the equipment.

Users should ensure for their own protection that the electrical ground connections of the power utility, telephone lines and internal metallic water pipe system, if present, are connected together. This precaution may be particularly important in rural areas.

Caution: Users should not attempt to make such connections themselves, but should contact the appropriate electrical inspection authority, or electrician, as appropriate.

Notes explicatives du ministère des Communications: limites visant les accessoires

L'étiquette du ministère des Communications du Canada indique que l'appareillage est certifié, c'est-à-dire qu'il respecte certaines exigences de sécurité et de fonctionnement visant les réseaux de télécommunications. Le ministère ne garantit pas que l'appareillage fonctionnera à la satisfaction de l'utilisateur.

Avant d'installer l'appareillage, s'assurer qu'il peut être branché aux installations du service de télécommunications local. L'appareillage doit aussi être raccordé selon des méthodes acceptées. Dans certains cas, le câblage interne du service de télécommunications utilisé pour une ligne individuelle peut être allongé au moyen d'un connecteur certifié (prolongateur téléphonique). Le client doit toutefois prendre note qu'une telle installation n'assure pas un service parfait en tout temps.

Les réparations de l'appareillage certifié devraient être confiées à un service d'entretien canadien désigné par le fournisseur. En cas de réparation ou de modification effectuées par l'utilisateur ou de mauvais fonctionnement de l'appareillage, le service de télécommunications peut demander le débranchement de l'appareillage.

Pour leur propre sécurité, les utilisateurs devraient s'assurer que les mises à la terre des lignes de distribution d'électricité, des lignes téléphoniques et de la tuyauterie métallique interne sont raccordées ensemble. Cette mesure de sécurité est particulièrement importante en milieu rural.

Attention: Les utilisateurs ne doivent pas procéder à ces raccordements eux-mêmes mais doivent plutôt faire appel aux pouvoirs de réglementation en cause ou à un électricien, selon le cas.

RELATED DOCUMENTATION

- Federal Communications Commission (FCC) Statement | 95
- FCC Requirements for Consumer Products | 95
- Food and Drug Administration, Center for Devices and Radiological Health | 96

Statements of Volatility for Juniper Network Devices

A *statement of volatility (SoV)*—sometimes known as *letter of volatility (LoV)*—identifies the volatile and non-volatile storage components in Juniper Networks devices, and describes how to remove non-volatile storage components from the device.

NOTE: Individual FRUs do not have separate SoV or LoV documents. They are covered in the SoV or LoV of the Juniper Networks device in which they are installed.

NOTE: Statements of volatility are not available for all Juniper Networks devices.

CTP Series:

- CTP150
- CTP2000

EX Series:

- EX2200 and EX2200-C
- EX2300-24P, EX2300-24T, and EX2300-24T-DC
- EX2300-48P and EX2300-48T
- EX2300-C
- EX3300
- EX3400-24P, EX3400-24T, EX3400-24T-DC
- EX3400-48P, EX3400-48T, EX3400-48T-AFI
- EX4200
- EX4300
- EX4300-48MP
- EX4400
    1. EX4400-24T
    2. EX4400-24P
    3. EX4400-24MP
    4. EX4400-24X
    5. EX4400-48T

6. EX4400-48P
7. EX4400-48MP
8. EX4400-48F

- EX4500
- EX4550
- EX4600
- EX8200
- EX9251
- EX9253
- XRE200 External Routing Engine

LN Series:

- LN1000–CC

MX Series:

- M7i
- M7i Compact Forwarding Engine Board (CFEB)
- M40e and M10i
- M320
- MX5, MX10, MX40, and MX80
- MX104
- MX204
- MX304
- MX240, MX480, and MX960
- MX10003
- RE-A-2000 Route Engine
- RE-S-X6-64G Routing Engine

NFX Series:

- NFX250

QFX Series:

- QFX3008-I
- QFX3100
- QFX3500
- QFX3600
- QFX5100-24Q
- QFX5100-48S
- QFX5100-48T
- QFX5110-32Q
- QFX5110-48S
- QFX5120
    1. QFX5120-32C
    2. QFX5120-48T
    3. QFX5120-48Y
    4. QFX5120-48YM
- QFX5200
- QFX5200-32C
- QFX10008 and QFX10016

SRX Series:

- SRX100
- SRX110
- SRX210B
- SRX210H-POE
- SRX210H-P-MGW
- SRX220

- SRX240H
- SRX240H-POE
- SRX300
- SRX320
- SRX340 and SRX345
- SRX380
- SRX550
- SRX650
- SRX1400
- SRX1500
- SRX3400 and SRX3600
- SRX4200
- SRX4600
- SRX5400, SRX5600, and SRX5800
- SRX-MP-1SERIAL
- SSG-520M

T Series:

- RE-A-2000 Route Engine

4

PART

Installation

Unpacking and Inspecting the CTP Platform | 105

Installing the Chassis | 108

Installing Modules | 111

Installing and Removing SFPs in a CTP Module | 120

Upgrading Components for Memory Upgrades | 124

Cabling | 126

Powering On | 133

Accessing the CTP2000 Platform | 141

CHAPTER 10

Unpacking and Inspecting the CTP Platform

IN THIS CHAPTER

- Before You Unpack the CTP Platform | 105
- Unpacking the CTP Device | 105
- Inspecting Platform Components and Accessories | 106
- If You Detect or Suspect Damage | 107
- Contacting Juniper Networks | 107

Before You Unpack the CTP Platform

Before you begin unpacking the device, be sure you have the following tools:

- No. 2 Phillips screwdriver
- Utility knife
- Mechanical lift, or at least two people to assist in lifting

RELATED DOCUMENTATION

Unpacking the CTP Device | 105

Inspecting Platform Components and Accessories | 106

If You Detect or Suspect Damage | 107

Contacting Juniper Networks | 107

Unpacking the CTP Device

Depending on the device, it may be delivered boxed, bolted, and strapped to a skid. For your convenience, we recommend that you unpack the device in the location where you want to install it.

WARNING: For the larger CTP series devices, three people are required to install the device in a rack: two to lift the device into position and one to screw it to the rack.

To unpack the device:

1. Cut the two straps that secure the carton to the skid, open the carton from the top, and remove the box of accessories that sits on top of the device.
2. Unlock the four plastic clips that hold the box to the skid by squeezing them in their center and pulling out, and then lift the carton off the device.
3. Remove the three screws that attach each of the two L-brackets to the device.
4. To avoid scratching the device when removing it from the skid, detach one of the L-brackets from the skid by removing the three screws.

RELATED DOCUMENTATION

Before You Unpack the CTP Platform | 105
Inspecting Platform Components and Accessories | 106
If You Detect or Suspect Damage | 107
Contacting Juniper Networks | 107

Inspecting Platform Components and Accessories

After you remove the equipment from the shipping containers:

- Confirm the contents of each container.
- Inspect all external surfaces and external connectors for visible signs of damage.
- Inspect all accessories shipped with each unit.
- Document any damage noted during your inspection.
- Confirm that the platform has the correct number and type of modules for your ordered configuration.

RELATED DOCUMENTATION

Before You Unpack the CTP Platform | 105

Unpacking the CTP Device | 105
If You Detect or Suspect Damage | 107
Contacting Juniper Networks | 107

If You Detect or Suspect Damage

If you detect or suspect damage to any equipment:

- Contact the shipper responsible for delivery, and formally report the damage.
- Contact your Juniper Networks sales representative or reseller.

RELATED DOCUMENTATION

Before You Unpack the CTP Platform | 105
Unpacking the CTP Device | 105
Inspecting Platform Components and Accessories | 106
Contacting Juniper Networks | 107

Contacting Juniper Networks

Please contact Juniper Networks at 1-888-314-JTAC (from the United States, Canada, or Mexico) or 1-408-745-9500 (from elsewhere), or contact your sales representative if you have any questions or concerns. See "Contacting Customer Support" on page 161 for complete contact information.

RELATED DOCUMENTATION

Before You Unpack the CTP Platform | 105
Unpacking the CTP Device | 105
Inspecting Platform Components and Accessories | 106
If You Detect or Suspect Damage | 107

CHAPTER 11

Installing the Chassis

IN THIS CHAPTER

- Before You Install the CTP2000 Platform | 108
- Installing the CTP2000 Platform in Freestanding Mode | 109
- Special Guidelines for Installing CTP2056 Chassis in a Rack | 109
- Installing the CTP2000 Platform in a Rack | 110

Before You Install the CTP2000 Platform

Before installing the platform:

- Refer to the platform specifications for the particular CTP model or series.
- Have a plan for installing the device that takes into consideration future expansion.
- Have the tools and accessories needed to complete the installation.
- Read and understand the clearance requirements for the front and back of the chassis for cable routing and other unit access. See"CTP2000 Environmental Requirements" on page 49 for more information.
- Read and understand the clearance requirements for the top and bottom of the chassis to ensure adequate ventilation.
- Prepare the equipment racks by measuring and marking space for each device and plenum you plan to install.

RELATED DOCUMENTATION

Installing the CTP2000 Platform in Freestanding Mode | 109

Installing the CTP2000 Platform in a Rack | 110

Installing the CTP2000 Platform in Freestanding Mode

When installing the device on a table top or in any other freestanding mode, be sure to leave enough space around the device for adequate ventilation. Position the chassis with easy access to the connections that it needs for power, local communications, and remote communications.

WARNING: At least two people are required to lift the device. Three people are required for the heavier CTP platforms.

CAUTION: To prevent electrostatic damage to the device and its components, make sure that persons handling the device wear an antistatic device.

RELATED DOCUMENTATION

- Before You Install the CTP2000 Platform | **108**
- Installing the CTP2000 Platform in a Rack | **110**
- Cabling the CTP2000 Platform Overview | **126**

Special Guidelines for Installing CTP2056 Chassis in a Rack

Before installing the CTP2056 platform in a rack, consider the following guidelines:

- You can install up to four CTP2056 chassis in a single 7-ft. (2.1-m) rack. Installing multiple devices in a single rack enables you to maximize your available space.
- Install the CTP2056 chassis on the bottom of the rack. Mount lighter devices higher in the rack.

RELATED DOCUMENTATION

- CTP2000 Rack Requirements | **51**
- Installing the CTP2000 Platform in a Rack | **110**

Installing the CTP2000 Platform in a Rack

To install the CTP platform in a rack, you need:

- Phillips screwdriver
- Four 10-32 x 3/8 Phillips screws for each device to be installed

Follow these guidelines:

1. Following your installation plan, use a tape measure and marking pen to measure and mark space on each equipment rack for each platform component. For horizontal spacing, follow Network Equipment Building System (NEBS) requirements.
2. With one person standing on the left side of the device and another standing on the right side, lift the device into the rack.
3. Position the device in its designated location in the equipment rack. Make sure the holes of the mounting brackets align evenly with the holes of the equipment rack on both sides.
4. Starting at the bottom of the device, secure the device in the equipment rack by using the 10-32 x 3/8 Phillips screws. Have a third person do this for the larger and heavier CTP chassis.
5. Connect the necessary cables. (See"Cabling the CTP2000 Platform Overview" on page 126 for instructions about installing the cables.)

RELATED DOCUMENTATION

Before You Install the CTP2000 Platform | **108**

Installing the CTP2000 Platform in Freestanding Mode | **109**

Cabling the CTP2000 Platform Overview | **126**

CHAPTER 12

Installing Modules

IN THIS CHAPTER

- CTP2000 Modules Installation Overview | 111
- Protecting CTP2000 Modules and Slots | 112
- Required Tools and Safety Items for Installing CTP Modules | 113
- Installing a CTP Interface Module, Processor Module, or Clock Module | 113
- Removing a CTP Interface Module, Processor Module, or Clock Module | 114
- Installing or Removing a CTP2000 Series CompactFlash Card | 115
- Installing a PMC on CTP2000 Platforms | 117

CTP2000 Modules Installation Overview

In CTP2000 platforms, you can install interface modules in the front and rear of the device.

RELATED DOCUMENTATION

Protecting CTP2000 Modules and Slots | 112

Required Tools and Safety Items for Installing CTP Modules | 113

Safety Guidelines and Warnings for Installing CTP Modules | 91

Installing a CTP Interface Module, Processor Module, or Clock Module | 113

Installing or Removing a CTP2000 Series CompactFlash Card | 115

Installing a PMC on CTP2000 Platforms | 117

Installing SFPs in a CTP2000 Module | 120

Protecting CTP2000 Modules and Slots

To prevent damage from electrostatic discharge, wear an antistatic wrist strap, and connect it to one of the jacks when handling components. The CTP2056 has an ESD (electrostatic discharge) grounding jack located in the rear lower-left corner of the chassis near the power switch. There are no ESD jacks on the other CTP2000 platforms, so you must use another grounding device.

To protect the modules, components, and slots when installing components, observe the following guidelines:

CAUTION: When handling components, use an antistatic wrist strap connected to one of the device's ESD grounding jacks or to another grounding device. This action helps to protect the module from damage by electrostatic discharge.

CAUTION: Always handle a module by its edges. Do not touch the components, pins, leads, or solder connections.

CAUTION: If you meet strong resistance when attempting to seat a module using the ejectors, remove it from the chassis and confirm that the slot is designed to hold the module. Also, be sure that you have aligned the left and right edges in the correct matching module guides.

CAUTION: Be sure to cover every empty slot with a blank filler panel to protect the device from dust or other foreign substances and to ensure proper device cooling.

CAUTION: Do not discard the antistatic bag. When a module is not in use, store it in an antistatic bag.

RELATED DOCUMENTATION

Safety Guidelines and Warnings for Installing CTP Modules | 91

Required Tools and Safety Items for Installing CTP Modules | 113

Required Tools and Safety Items for Installing CTP Modules

You need the following tools to install the interface module of a CTP151 device:

- Phillips screwdriver
- ESD wrist strap or other grounding device

RELATED DOCUMENTATION

> *Safety Guidelines and Warnings for Installing CTP151 Modules*
>
> *Installing a CTP Interface Module, Processor Module, or Clock Module*

Installing a CTP Interface Module, Processor Module, or Clock Module

To install a CTP module:

1. Ground yourself by using an antistatic wrist strap or other device, and connect it to one of the ESD grounding jacks, if available, or another grounding device.
2. Choose the slot where you want to insert the module.
3. With a Phillips screwdriver, loosen the screws that secure the blank filler panel covering the empty chassis slot, if present, and remove the filler panel.
4. Remove the module from its antistatic bag, being careful not to touch module components, pins, leads, or solder connections.
5. Verify that the ejectors are in the open position (facing outward).
6. Guide the module into the chassis by placing it between the guides of the selected slot and pushing the module until it stops.

   The module stops sliding when the ejectors make contact with the chassis.

   ⚠ **CAUTION**: If you meet strong resistance when attempting to seat the module using the ejectors, remove it from the chassis, and confirm that the slot is designed to hold the component. Also, be sure that you have aligned the left and right edges in the correct matching tracks.
7. Insert the module into the midplane by simultaneously pressing both ejectors inward and exerting forward pressure on the module. The small red release buttons should click into place.
8. Tighten the module's captive screws using a Phillips screwdriver.

NOTE: Tighten the captive screws completely before installing an adjacent module so that proper electromagnetic interference (EMI) gasket compression occurs. Failure to do this can make it difficult to install adjacent modules.

9. Go to "Cabling the CTP2000 Platform Overview" on page 126.

RELATED DOCUMENTATION

Removing a CTP Interface Module, Processor Module, or Clock Module | 114
CTP2000 T1/E1 Interface Module | 14
CTP2000 Clock Interface Modules | 32
Cabling the CTP2000 Platform Overview | 126
T1/E1 Interface Module Pinouts | 63

Removing a CTP Interface Module, Processor Module, or Clock Module

NOTE: We recommend that you issue the **slot disable** command from the CLI before removing a line module.

⚠ **CAUTION**: If you do not use the **halt** command before powering down the CTP device, the CompactFlash card might become corrupted.

To remove a CTP module:

1. Issue the **halt** command.
2. Ground yourself by using an antistatic wrist strap or other device, and connect it to an ESD grounding jack, if available, or another grounding device.
3. Use a Philips screwdriver to loosen the captive screws located at the top and bottom of the module panel.
4. If the module has ejector handles, press the red release buttons, and pull the ejector handles outward to the open position.
5. Carefully slide the module out of the chassis.
6. Place the module in its antistatic bag, being careful not to touch module components, pins, leads or solder connections.

7. Cover the empty chassis slot with a blank filler panel, and tighten the filler panel's captive screws using a Phillips screwdriver. Turn both screws several times before tightening them completely.

RELATED DOCUMENTATION

- Installing a CTP Interface Module, Processor Module, or Clock Module | 113
- CTP2000 T1/E1 Interface Module | 14
- CTP2000 Clock Interface Modules | 32
- Cabling the CTP2000 Platform Overview | 126
- T1/E1 Interface Module Pinouts | 63

Installing or Removing a CTP2000 Series CompactFlash Card

On the CTP2000 series devices with the new PP833 processor, the CompactFlash card is installed on the processor itself (which may be located under an installed PMC card), which prevents insertion or removal of the CompactFlash card until the PMC card is removed. On the CTP2000 series devices with the PP310 and PP332 processors, the CompactFlash card is installed on the processor rear transition module (RTM). Some CTP devices may ship with a CompactFlash card already installed.

To remove or install the CompactFlash card for the CTP2000 series with the new PP833 processor (see Figure 37 on page 116):

1. Power off the unit.
2. If installed, remove the PP833 PMC card by unscrewing the retaining screws and pushing the extractors outward with the latching buttons depressed.
3. You can then remove or install the CompactFlash card in the flash socket.
4. If being used, reinstall the PP833 PMC card into the chassis, and secure the retaining screws.

Figure 37: Installing CompactFlash on the PP833 processor

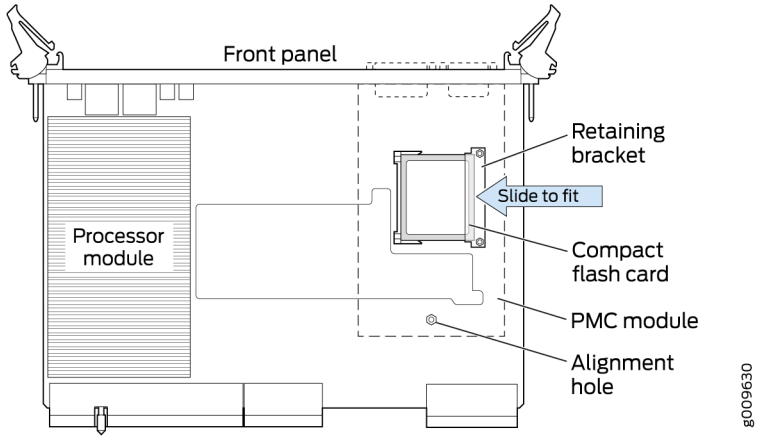

To remove or install the CompactFlash card for the CTP2000 series with the PP310 and PP332 processors (see Figure 38 on page 117):

1. Power off the unit.
2. Remove the processor RTM by unscrewing the retaining screws and pushing the extractors outward with the latching buttons depressed.
3. Remove the CompactFlash card retaining screw and nut. You can then remove or install the CompactFlash card in the flash socket (see Figure 38 on page 117).
4. Reinstall the CompactFlash card retaining screw and nut.
5. Reinstall the processor RTM into the chassis, and secure the retaining screws.

Figure 38: CompactFlash on the RTM

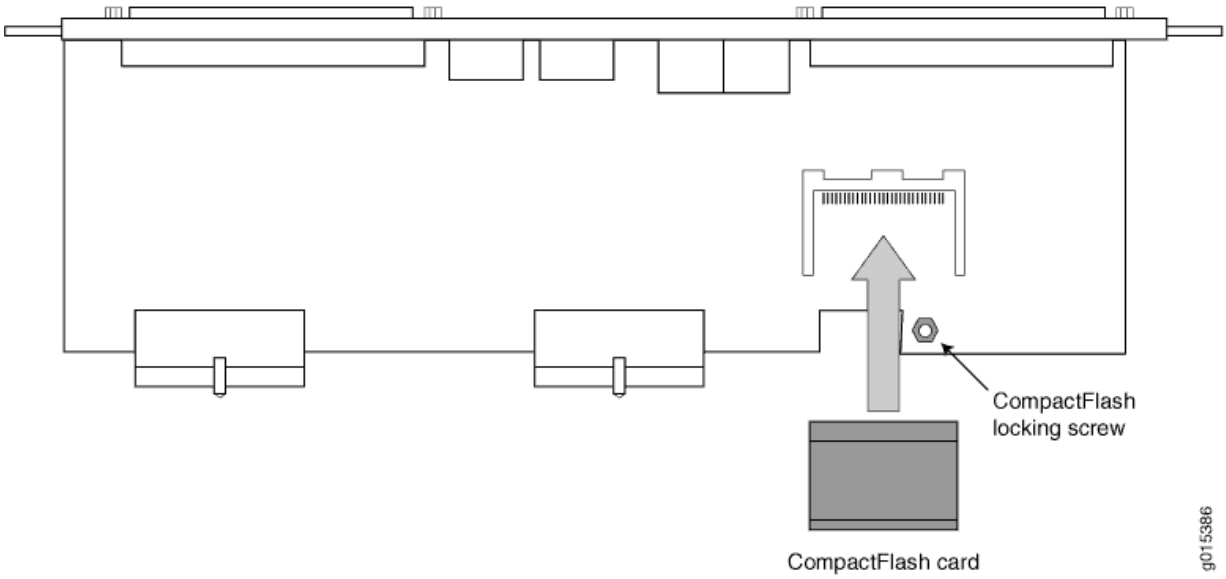

RELATED DOCUMENTATION

Installing a CTP Interface Module, Processor Module, or Clock Module | 113

Installing a PMC on CTP2000 Platforms

The PCI mezzanine card (PMC) is mounted on the processor module and can be installed or replaced in the field. Figure 39 on page 118 displays the location of the PMC.

Figure 39: CTP2000 Platforms PMC Location

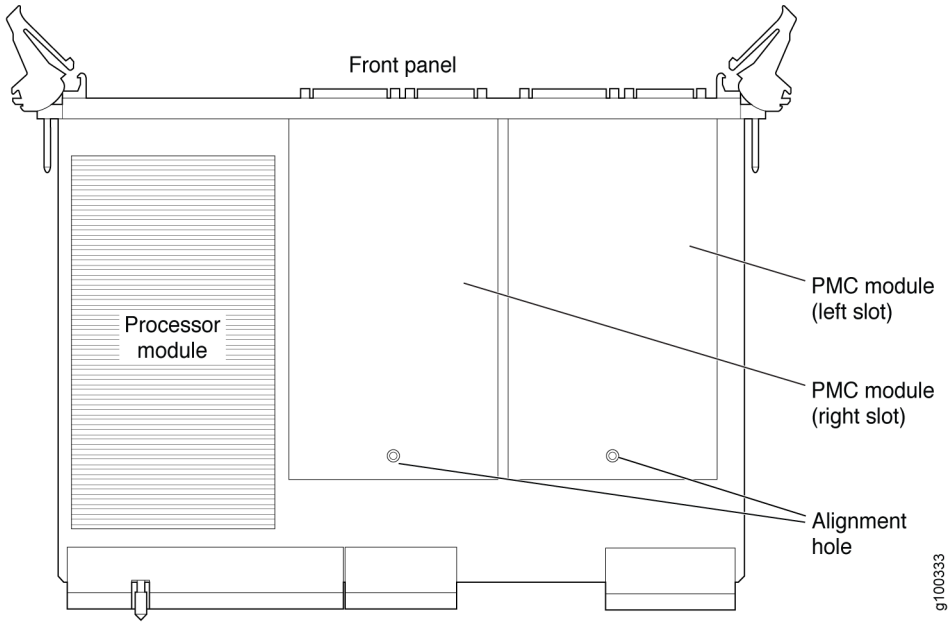

To install a PMC:

1. Confirm that the device is powered off.
2. Remove the processor module by unscrewing the retaining screws and pushing the extractors outward while depressing the latching buttons.
3. If a PMC was not previously installed, a shield may have been inserted in the PMC slot of the processor's front panel. Remove this shield by gently pushing it out from behind the panel.
4. The PMC has four screws. Two of the screws are secured to standoffs, and two are attached to the front assembly of the PMC. Remove the two screws secured to the standoff, leaving the standoff attached to the PMC. Remove the two screws on the front assembly located on the side with the standoffs. The front assembly should remain attached to the PMC hardware. Keep the screws for reattachment.
5. Align the PMC with the printed circuit board connectors toward the processor board and with the fiber connectors inserted through the processor's front panel. Align the alignment post on the processor module with the PMC's alignment hole.
6. Gently press the PMC into the processor module.
7. From the back of the processor module, use the four Phillips head screws to secure the two PMC standoff posts and PMC front assembly to the processor module.
8. Reinstall the processor.

RELATED DOCUMENTATION

Installing a CTP Interface Module, Processor Module, or Clock Module | **113**

CTP2000 PMC Module | **36**

CHAPTER 13

Installing and Removing SFPs in a CTP Module

IN THIS CHAPTER

- Installing SFPs in a CTP2000 Module | **120**
- Removing SFPs in a CTP2000 Module | **122**

Installing SFPs in a CTP2000 Module

This section describes how to install small form-factor pluggable transceivers (SFPs) on interface modules that support these devices. In the current release, the CTP-FX2000GE-UPG supports SFPs.

You can replace the SFPs without disabling the interfaces or removing the module from the device.

To install SFPs:

1. Ground yourself by using an antistatic wrist strap or other device, and connect it to an ESD grounding jack.
2. Identify the following items on the SFP (Figure 40 on page 121):
   - The connection circuitry on the base
   - The cable connectors on the front

Figure 40: Representative SFP

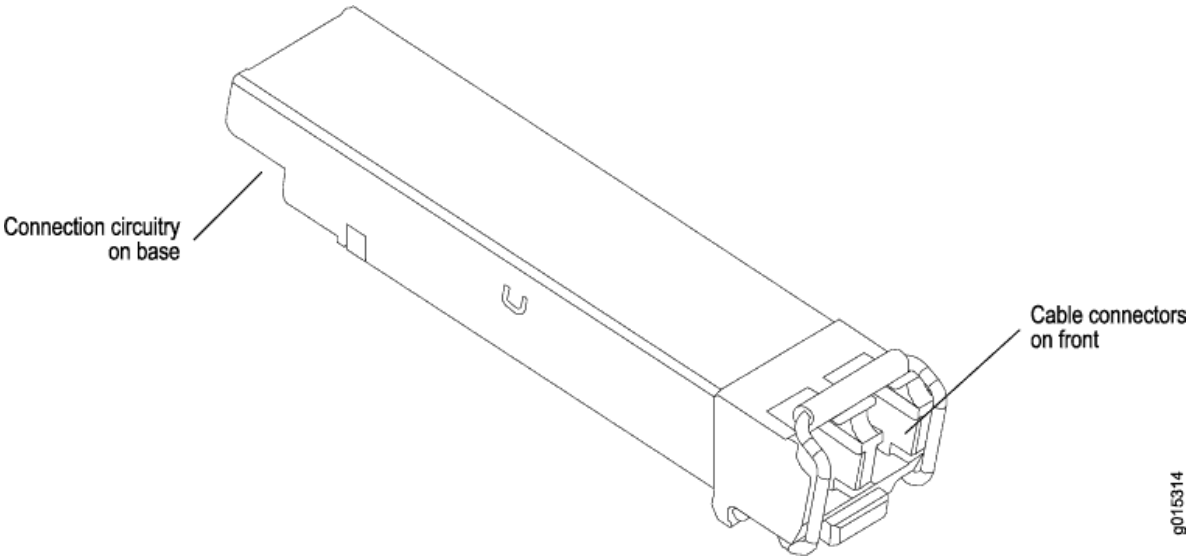

CAUTION: Be sure to position the SFP correctly before you install it.

3. Hold the SFP so that:
   - The connection circuitry is adjacent to the module's faceplate.
   - The cable connectors are visible when you install the SFP.
4. Slide the SFP as far as you can into the module until the SFP clicks into place.

   If the SFP does not slide smoothly into the module, make sure that the orientation of the SFP is correct.
5. Gently pull the SFP to confirm that it is inserted correctly.

   If the SFP comes out of the slot when you pull it, repeat Step 4.
6. Connect the new cables to the SFP.

RELATED DOCUMENTATION

Removing SFPs in a CTP2000 Module | 122

Removing SFPs in a CTP2000 Module

This section describes how to replace small form-factor pluggable transceivers (SFPs) on interface modules that support these devices. You can replace the SFPs without disabling the interfaces or removing the module from the device.

To remove an SFP:

1. Obtain an antistatic container for the SFP you plan to remove.
2. Ground yourself by using an antistatic wrist strap or other device, and connect it to an ESD grounding jack.
3. Disconnect the cable from the SFP on the module.
4. Identify the release mechanism for the SFP.

   Different SFPs use different release mechanisms. See Figure 41 on page 122 for possible release mechanisms, which include:

   - A button that you press inward
   - A ring that you press inward
   - A bar that you pull sideways, then outward
   - A tab that you pull sideways, then outward

Figure 41: Possible Release Mechanisms on the SFP

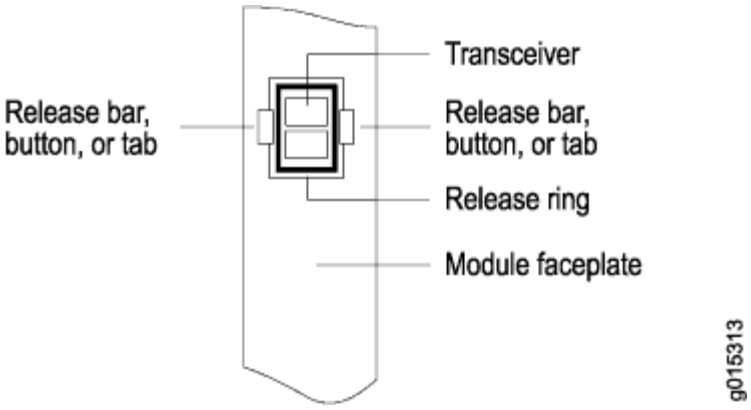

5. Release the SFP and pull it out of the slot.
6. Place the SFP into an antistatic bag.

RELATED DOCUMENTATION

Installing SFPs in a CTP2000 Module | **120**

CHAPTER 14

Upgrading Components for Memory Upgrades

IN THIS CHAPTER

- Upgrading CTP2000 Series Components for Memory Upgrades | 124

Upgrading CTP2000 Series Components for Memory Upgrades

Certain CTP2000 Series components need to be upgraded when RAM memory is increased, as required by certain JUNOS version updates. The affected modules and other components can be:

- Processor module that contains the RAM card
- CompactFlash card
- Rear transition module (RTM) in case of the PP310 and PP332 processors

To install a CTP module:

1. Ground yourself by using an antistatic wrist strap or other device, and connect it to one of the ESD grounding jacks, if available, or another grounding device.
2. Choose the slot where you want to insert the module.
3. With a Phillips screwdriver, loosen the screws that secure the blank filler panel covering the empty chassis slot, if present, and remove the filler panel.
4. Remove the module from its antistatic bag, being careful not to touch module components, pins, leads, or solder connections.
5. Verify that the ejectors are in the open position (facing outward).
6. Guide the module into the chassis by placing it between the guides of the selected slot and pushing the module until it stops.

   The module stops sliding when the ejectors make contact with the chassis.

> **CAUTION**: If you meet strong resistance when attempting to seat the module using the ejectors, remove it from the chassis, and confirm that the slot is designed to hold the component. Also, be sure that you have aligned the left and right edges in the correct matching tracks.

7. Insert the module into the midplane by simultaneously pressing both ejectors inward and exerting forward pressure on the module. The small red release buttons should click into place.
8. Tighten the module's captive screws using a Phillips screwdriver.

> **NOTE**: Tighten the captive screws completely before installing an adjacent module so that proper electromagnetic interference (EMI) gasket compression occurs. Failure to do this can make it difficult to install adjacent modules.

9. Go to "Cabling the CTP2000 Platform Overview" on page 126.

RELATED DOCUMENTATION

Removing a CTP Interface Module, Processor Module, or Clock Module | **114**

Installing or Removing a CTP2000 Series CompactFlash Card | **115**

CTP2000 Series Processor | **2**

CHAPTER 15

Cabling

IN THIS CHAPTER

- Cabling the CTP2000 Platform Overview | 126
- Required Tools, Wires, and Cables for the CTP2000 Platform | 127
- CTP2000 Management Ports | 128
- Cabling a CTP2000 T1/E1 Interface Module | 129
- Cabling the CTP Platform for DC Power | 129

Cabling the CTP2000 Platform Overview

Cabling the CTP platform requires the following main tasks:

1. Familiarize yourself with the module ports, and ensure that you have the cables and wires needed to complete each cabling procedure.
2. Read and understand all safety warnings. (See "CTP Safety Guidelines and Warnings" on page 89.)
3. Connect timing ports.
4. Connect grounding wires to the chassis.
5. Connect the power cables from the power source to the power supply.
6. Connect the interface modules to their appropriate network interface.

RELATED DOCUMENTATION

- CTP2000 Serial Interface Modules | 13
- CTP Cabling Recommendations | 53
- Required Tools, Wires, and Cables for the CTP2000 Platform | 127
- CTP2000 Management Ports | 128
- Cabling a CTP2000 T1/E1 Interface Module | 129
- Cabling the CTP Platform for DC Power | 129

Setting Up Management Access on the CTP2000 Platform | 141

CTP2000 Console Port Setup | 142

T1/E1 Interface Module Pinouts | 63

Required Tools, Wires, and Cables for the CTP2000 Platform

Cabling your device takes only a few minutes. You need the following items and the cables listed in Table 25 on page 127 for proper installation:

- 1/8-inch flathead screwdriver
- 3/8-inch wrench or 3/8-inch nut-driver
- No. 2 Phillips screwdriver
- Ground wires—We recommend a minimum of 18-AWG ground wire for AC and DC-powered versions, if applicable.
- Two #10 kep nuts (supplied) to connect the ground (earth) wire to the ground terminal.
- Power module wiring—We recommend a minimum of 18-AWG wire for the device with a dual stud terminal lug with 5/8-inch spacing.

Consider the distance from the connection point and the configuration of the device when determining the size of wire used.

Table 25: Required Cables

Connection	Port and Cable Used
Management connection between the processor module and the LAN	One Ethernet management port with an RJ-45 connector.
Management connection between the processor module and a management console	One RS-232 port with a DB-9 connector for VT100 management access on the PP833 processors. One COM2 port with an RJ-45 connector on the PP310 and PP332 processors.
Direct connections to interface modules	Cables vary depending on module.

RELATED DOCUMENTATION

Cabling the CTP2000 Platform Overview | 126

Cabling a CTP2000 T1/E1 Interface Module | 129

CTP2000 Series Console Cable Pinouts | 79

Terminal Block and Circuit Breaker Specifications | 85

CTP2000 Management Ports

You can monitor and manage the system through a local serial console or a remote network console.

- Local serial console—You can connect a local serial console (PC, Macintosh, or UNIX workstation) directly to the **COM2** port on the PP310 and PP332 processors. On the PP833 processor, a local serial console is connected using the supplied USB-to-DB9 cable (p/n 720-071594), in which the DB-9 connector has the same pinout as a standard RS-232 DTE port. When the USB-to-DB9 cable is used in conjunction with the DB-9 adapter labelled “p/n 450-071855”, the available RJ-45 console pinout will be the same as the console connection on the RTM of PP332/PP310 processor.

  Alternatively, if the DB-9 adapter from the bag labelled “p/n 720-056657” is used instead of “p/n 450-071855”, the available RJ-45 console pinout will be similar to the CTP150 console port (and other Juniper routers). To connect the PP833 processor with the DB-9 plug serial port of a PC, additionally connect a straight RJ-45 cable with the DB-9 adapter from the bag labelled “p/n 720-056657”. The other end of the RJ-45 cable connects to the DB-9 adapter from the bag labelled “p/n 720-014126”. Then, you can connect the PC’s DB-9 plug connector with the DB-9 adapter “p/n 720-014126”. See "CTP2000 Series Console Cable Pinouts" on page 79 for more information about console cable pinouts.

- Remote network console—Connect Ethernet to an Ethernet port, and run SSH from a remote network console.

For initial access to the system, you need to physically connect your console directly to the device’s RS-232 port. Through this connection, you use the CLI to set an IP address on the device. After you configure the IP address, you can access the device remotely (for example, through SSH).

RELATED DOCUMENTATION

Setting Up Management Access on the CTP2000 Platform | 141

Cabling a CTP2000 T1/E1 Interface Module | 129

Cabling the CTP Platform for DC Power | 129

CTP2000 Series Console Cable Pinouts | 79

Cabling a CTP2000 T1/E1 Interface Module

To install a cable in an interface module:

1. Ground yourself by using an antistatic wrist strap or other device, and connect it to an ESD grounding jack, if available, or another grounding device.
2. Slide the cable as far as you can into the module until it clicks into place.
3. Gently pull the cable to confirm that it is inserted correctly.
4. Go on to "Cabling the CTP Platform for DC Power" on page 129.

For more information about T1/E1 interface module pinouts for the RJ-45 connector, refer "T1/E1 Interface Module Pinouts" on page 63.

RELATED DOCUMENTATION

Required Tools, Wires, and Cables for the CTP2000 Platform | 127

CTP2000 Management Ports | 128

CTP2000 T1/E1 Interface Module | 14

Cabling the CTP Platform for DC Power

IN THIS SECTION

- Task 1: Turning Off All CTP Platform Power | 130
- Task 2: Connecting the Grounding Cable to the CTP Platform (CTP2056 Platform Only) | 130
- Task 3: Connecting the Power Cables to the CTP2000 Platform | 131

After you have correctly cabled the RTM for the CTP2000 Series, you must attach grounding and electrical wires before you turn the device on.

Three main tasks are involved:

1. Push the power switch to **OFF**. (The switch might have accidentally flipped to **ON** during shipping and installation.)
2. Connect the grounding wires to the chassis.

WARNING: Always connect the grounding wires first (before connecting the power cables) and disconnect them last when installing or servicing the device.

3. Connect the power cables to the power supplies.

Table 26 on page 130 identifies the cabling requirements.

Table 26: CTP Power Supply Cables and Wires Needed

Cable/Wire	From	To
One 18-AWG ground wire	PDU ground terminal	Termination ground
Two 18-AWG wire leads	PDU Power A –48 VDC and RTN leads	Appropriate leads on power source No.1
Two 18-AWG wire leads	PDU Power B –48 VDC and RTN leads	Appropriate leads on power source No.2

Task 1: Turning Off All CTP Platform Power

Push all device power switches to **OFF** to turn off the device.

Task 2: Connecting the Grounding Cable to the CTP Platform (CTP2056 Platform Only)

The CTP2056 device has a grounding stud located in the rear of the chassis, near the power inputs.

To ground the power unit:

1. Locate the grounding stud.
2. Remove the nuts and locking washers from the grounding stud.

NOTE: We recommend a minimum of 18-AWG ground wire with a ring-style terminal.

3. Place the grounding cable lead on the grounding stud, and tighten the nuts to secure the connection.
4. Connect the other end of the ground cable to the appropriate ground termination lead.

NOTE: When grounding the device, leave a service loop in the grounding cable to ensure that the grounding cable is the last cable to disconnect from the shelf if strain is placed on the electrical cables.

Task 3: Connecting the Power Cables to the CTP2000 Platform

WARNING: Before you begin this procedure, be sure the power source is turned off, the device is turned off, and proper grounding wires are attached.

To connect power cables to the device:

1. Be sure you have completed Task 1: Turning Off All CTP Platform Power and Task 2: Connecting the Grounding Cable to the CTP Platform (CTP2056 Platform Only).

   WARNING: The wiring color code of the power cables depends on the color coding of the DC power source installed at your site. Color code standards for DC wiring do not exist. To ensure that the correct polarity is connected to the device power units, confirm the connection of the power cables to the + (positive) and – (negative) leads at the power source.

2. Remove the nuts and locking washers from the posts for the power input (A or B) using a small insulated adjustable wrench.
3. Place one negative (neutral) cable lead on the post labeled **–48 VDC**.
4. Replace the locking washers and nuts, and tighten the nuts to secure the connection.
5. Place the other cable lead on the post labeled **RTN**.
6. Replace the locking washer and nut, and firmly tighten the nut to secure the connection.
7. Attach the opposite end of Power A's wire leads to the appropriate leads on your power source.

   NOTE: To provide redundancy, do not use the same power source for Power A and Power B leads.

8. Repeat Steps 1–7 for each power supply module in your configuration.

RELATED DOCUMENTATION

CTP2000 Management Ports | 128

Cabling a CTP2000 T1/E1 Interface Module | **129**

Required Tools, Wires, and Cables for the CTP2000 Platform | **127**

Terminal Block and Circuit Breaker Specifications | **85**

CHAPTER 16

Powering On

IN THIS CHAPTER

- Before You Power On the CTP2000 Platform | 133
- Powering On the CTP2000 Platform | 134
- Powering Off the CTP Platform | 140

Before You Power On the CTP2000 Platform

Before powering on the device, make sure you complete the following tasks. See the appropriate sections for information about these tasks.



WARNING: Be sure the power source is turned off and the device is turned off before you perform the installation tasks.

- "Installing a CTP Interface Module, Processor Module, or Clock Module" on page 113
- "Cabling a CTP2000 T1/E1 Interface Module" on page 129
- "Cabling the CTP Platform for DC Power" on page 129
- "Setting Up Management Access on the CTP2000 Platform" on page 141

RELATED DOCUMENTATION

Powering On the CTP2000 Platform | 134

Powering Off the CTP Platform | 140

Powering On the CTP2000 Platform

NOTE: In this procedure we assume that the device is already connected to a power source. If using a DC power supply, see "Cabling the CTP Platform for DC Power" on page 129.

For specifications on the electrical requirements for the device, see one of the following topics:

- "CTP2008 Platform Specifications and Certification" on page 39
- "CTP2024 Platform Specifications and Certification" on page 42
- "CTP2056 Platform Specifications and Certification" on page 45



CAUTION: Evaluate the overall loading of the branch circuit before you install any equipment into a rack.

To power on the device:

1. Verify that the power source is operational.
2. Inspect all grounding and power connections to the device chassis.
3. Confirm that all cable connections are secure.
4. Switch any available power switches to ON.
5. Monitor LEDs to verify that the device is booting properly.

   The device goes through a boot process. When a prompt appears on the system console, the device is ready to be configured. If the system is new, the device boots to a first boot script. If the system is already operational, it boots to a login prompt.

The series of login prompts requires the following settings:

1. Passwords for CTP Series platforms.
2. Supported protocol or protocols—(0) IPv4 only, (1) IPv6 only, or (2) IPv4 and IPv6. Enter the appropriate number value.
3. Default interface—From the list of available devices, such as eth0 and eth1 (or more), enter the one to be the default.
4. Hostname of the device.
5. IP address of the interface—Enter the IP address of the selected interface, or accept the loopback address (127.0.0.1) by default.

6. Netmask of the IP address—Enter the netmask (such as 255.255.255.128), or accept 255.255.255.0 as the default.
7. Gateway IP address—Enter the IP address of the gateway, or accept the local address (127.0.0.1) as the default
8. Maximum transmission unit (MTU)—Enter the MTU in bytes, or accept 1500 bytes as the default.
9. Static routes added to the default interface, if any.
10. Date and time GMT (more precisely, UTC)—Enter these separately in digits for the month, day, hour, and minutes in Coordinated Universal Time (UTC), or accept the internal settings.

    The device goes into startup mode.

For example:

```
...
********** Setting up system passwords ***********
Changing root's password!
################################################################################
################################################################################
################################################################################
                  PLEASE REMEMBER THESE PASSWORDS!!!


Password recovery is not a simple process:
- It is service affecting.
- It requires console access to the CTP
- It requires rebooting of the device
################################################################################
################################################################################
################################################################################

The new password must be alphanumeric or the characters

           @ { } # % ~ [ ] = & , - _ !


The new password must also be at least 6 characters long, with

1 lowercase, 1 uppercase, 1 digits and 1 other characters.

Enter New Password for root
```

```
Retype New Password for root

Changing password for user root.
passwd: all authentication tokens updated successfully.
Backing up /etc to nonvolatile storage..
Changing ctp_cmd's password!
################################################################################
################################################################################
################################################################################
                  PLEASE REMEMBER THESE PASSWORDS!!!


Password recovery is not a simple process:
- It is service affecting.
- It requires console access to the CTP
- It requires rebooting of the device
################################################################################
################################################################################
################################################################################

The new password must be alphanumeric or the characters

           @ { } # % ~ [ ] = & , - _ !


The new password must also be at least 6 characters long, with

1 lowercase, 1 uppercase, 1 digits and 1 other characters.

Enter New Password for ctp_cmd

Retype New Password for ctp_cmd

Changing password for user ctp_cmd.
passwd: all authentication tokens updated successfully.
Backing up /etc to nonvolatile storage..
Changing ctp's password!
################################################################################
################################################################################
################################################################################
                  PLEASE REMEMBER THESE PASSWORDS!!!
```

```
Password recovery is not a simple process:
- It is service affecting.
- It requires console access to the CTP
- It requires rebooting of the device
################################################################################
################################################################################
################################################################################

The new password must be alphanumeric or the characters

           @ { } # % ~ [ ] = & , - _ !


The new password must also be at least 6 characters long, with

1 lowercase, 1 uppercase, 1 digits and 1 other characters.

Enter New Password for ctp

Retype New Password for ctp

Changing password for user ctp.
passwd: all authentication tokens updated successfully.
Backing up /etc to nonvolatile storage..
Changing ctp_sa's password!
################################################################################
################################################################################
################################################################################
                  PLEASE REMEMBER THESE PASSWORDS!!!


Password recovery is not a simple process:
- It is service affecting.
- It requires console access to the CTP
- It requires rebooting of the device
################################################################################
################################################################################
################################################################################

The new password must be alphanumeric or the characters

           @ { } # % ~ [ ] = & , - _ !
```

```
The new password must also be at least 6 characters long, with

1 lowercase, 1 uppercase, 1 digits and 1 other characters.

Enter New Password for ctp_sa

Retype New Password for ctp_sa

Changing password for user ctp_sa.
passwd: all authentication tokens updated successfully.
Backing up /etc to nonvolatile storage..
Changing ctp_audit's password!
################################################################################
################################################################################
################################################################################
                  PLEASE REMEMBER THESE PASSWORDS!!!


Password recovery is not a simple process:
- It is service affecting.
- It requires console access to the CTP
- It requires rebooting of the device
################################################################################
################################################################################
################################################################################

The new password must be alphanumeric or the characters

           @ { } # % ~ [ ] = & , - _ !


The new password must also be at least 6 characters long, with

1 lowercase, 1 uppercase, 1 digits and 1 other characters.

Enter New Password for ctp_audit

Retype New Password for ctp_audit

Changing password for user ctp_audit.
passwd: all authentication tokens updated successfully.
```

```
Backing up /etc to nonvolatile storage..
********** Setting up the network **********
Configure supported protocols:
0)  IPv4 Only
1)  IPv6 Only
2)  IPv4 and IPv6
Please select your option (rtn for 0):

There are 4 ethernet devices available for use. The default device
is the device through which the default gateway can be accessed.

Ctp circuits can run over any ethernet device, default or not.
A default device must be configured, other devices may be configured
and enabled, or disabled. Here is a list ot the available devices
and their descriptions:

        eth0: 10/100/1000 Copper (front)
        eth1: 10/100/1000 Copper (back)
        eth2: 1000 Fiber (left)
        eth3: 1000 Fiber (right)

What device would you like to make the IPV4 default device? (rtn for eth0): eth1
OK, eth1 (10/100/1000 Copper (back)) will be configured as IPV4 default device.

Please input the hostname (return for (none)): nova_54

===== Configuration for eth1 (default device):
Please input the ip (return for 127.0.0.1): 172.25.61.54
Please input the netmask (return for 255.255.255.0): 255.255.255.128
Please input the gateway (return for 127.0.0.1): 172.25.61.1
Please input the mtu in bytes (return for 1500):

Add route to interface eth1 [n]

=====================================
=== OS Security level set to LOW ===
=====================================

********** Setting up date/time **********
Setting the date (GMT). Please input the year [2008-2020] (return for 2010):

Setting the date (GMT). Please input the month [1-12] (return for 01):
```

```
Setting the date (GMT). Please input the day [1-31] (return for 11):

Setting the date (GMT). Please input the hour [0-23] (return for 20):

Setting the date (GMT). Please input the minute [0-59] (return for 22):

INIT: Entering runlevel: 3
Entering non-interactive startup
...
```

During initial power-on, the components of the platform run boot code, go through a series of self-diagnostic tests, and synchronize with each other.

When the tests are complete, use the LEDs on each module to determine the status of the device. Observe the module LEDs on the front or rear components.

RELATED DOCUMENTATION

Before You Power On the CTP2000 Platform | 133

Powering Off the CTP Platform | 140

Powering Off the CTP Platform

se to power device

1. From the Main Menu, select **5) Node Operations**.
2. From the Node Operations Menu, select **10) Powerdown Node**.

CHAPTER 17

Accessing the CTP2000 Platform

IN THIS CHAPTER

- Setting Up Management Access on the CTP2000 Platform | 141
- CTP2000 Console Port Setup | 142
- Using HyperTerminal with the CTP2000 Platform | 143
- Connecting Directly to the CTP2000 Platform | 144
- CTP2000 Platform SSH Setup | 144

Setting Up Management Access on the CTP2000 Platform

Before you power on the device, you must set up a management console. You use the console to communicate with the device during the power-on process, to set an IP address, and to manage the system using the command-line interface (CLI).

You can monitor and manage the system through either of these methods:

- Local serial console—You can connect a local serial console (PC, Macintosh, or UNIX workstation) directly to the **CONSOLE** terminal port. When you connect a local serial console directly to the device, you can configure the device without an IP address. To communicate with the device, you must have a terminal emulation program running on your PC or Macintosh. You can use any terminal emulation program, such as HyperTerminal. A UNIX workstation can use the emulator TIP.

  You can connect a local serial console to the COM2 port on the PP310 and PP332 processors. On the PP833 processor, a local serial console is connected using the supplied USB-to-DB9 cable (p/n 720-071594), in which the DB-9 connector has the same pinout as a standard RS-232 DTE port. When the USB-to-DB9 cable is used in conjunction with the DB-9 adapter labelled “p/n 450-071855”, the available RJ-45 console pinout will be the same as the console connection on the RTM of PP332/PP310 processor.

  Alternatively, if the DB-9 adapter from the bag labelled “p/n 720-056657” is used instead of “p/n 450-071855”, the available RJ-45 console pinout will be similar to the CTP150 console port (and other Juniper routers). To connect the PP833 processor with the DB-9 plug serial port of a PC, additionally connect a straight RJ-45 cable with the DB-9 adapter from the bag labelled “p/n

720-056657". The other end of the RJ-45 cable connects to the DB-9 adapter from the bag labelled "p/n 720-014126". Then, you can connect the PC's DB-9 plug connector with the DB-9 adapter "p/n 720-014126".

See "CTP2000 Series Console Cable Pinouts" on page 79 for information about the pinouts of PP310/PP332 and PP833 processor console cables, USB-to-DB9 cable, and DB9-to-RJ45 adapters.

- Remote network console—Connect Ethernet to an Ethernet port, and run SSH from a remote network console.

For initial access to the system, you need to physically connect your console directly to the device's RS-232 port. Through this connection you use the CLI to set an IP address on the device. After you configure the IP address, you can access the device remotely (for example, through SSH).

RELATED DOCUMENTATION

CTP2000 Console Port Setup | 142

Using HyperTerminal with the CTP2000 Platform | 143

Connecting Directly to the CTP2000 Platform | 144

CTP2000 Platform SSH Setup | 144

CTP2000 Management Ports | 128

Required Tools, Wires, and Cables for the CTP2000 Platform | 127

CTP2000 Console Port Setup

You can connect a local serial console (PC, Macintosh, or UNIX workstation) directly to the CONSOLE terminal port. When you connect a local serial console directly to the device, you can configure the device without an IP address. To communicate with the device, you must have a terminal emulation program running on your PC or Macintosh. You can use any terminal emulation program, such as HyperTerminal. A UNIX workstation can use the emulator TIP.

You can connect a local serial console to the COM2 port on the PP310 and PP332 processors. On the PP833 processor, a local serial console is connected using the supplied USB-to-DB9 cable (p/n 720-071594), in which the DB-9 connector has the same pinout as a standard RS-232 DTE port. When the USB-to-DB9 cable is used in conjunction with the DB-9 adapter labelled "p/n 450-071855", the available RJ-45 console pinout will be the same as the console connection on the RTM of PP332/PP310 processor.

Alternatively, if the DB-9 adapter from the bag labelled "p/n 720-056657" is used instead of "p/n 450-071855", the available RJ-45 console pinout will be similar to the CTP150 console port (and other

Juniper routers). To connect the PP833 processor with the DB-9 plug serial port of a PC, additionally connect a straight RJ-45 cable with the DB-9 adapter from the bag labelled “p/n 720-056657”. The other end of the RJ-45 cable connects to the DB-9 adapter from the bag labelled “p/n 720-014126”. Then, you can connect the PC’s DB-9 plug connector with the DB-9 adapter “p/n 720-014126”.

See "CTP2000 Series Console Cable Pinouts" on page 79 for information about the pinouts of PP310/PP332 and PP833 processor console cables, USB-to-DB9 cable, and DB9-to-RJ45 adapters.

RELATED DOCUMENTATION

CTP2000 Series Console Cable Pinouts | 79

Setting Up Management Access on the CTP2000 Platform | 141

Required Tools, Wires, and Cables for the CTP2000 Platform | 127

Using HyperTerminal with the CTP2000 Platform

If your console uses a version of Microsoft Windows (such as Windows XP or Windows NT 4.0) that supports the HyperTerminal application, you can access the device through HyperTerminal.

1. Click the **Start** button and select **Programs, Accessories, Communications, and HyperTerminal**.
2. In the HyperTerminal window, select **HyperTerminal**.
3. In the Connection Description dialog box, enter a name for your device in the Name field.
4. Select any icon to represent your terminal emulation, and click **OK**.
5. In the Connect To dialog box, in the Connect using field, select the appropriate COM port to use (for example, **COM1**), and click **OK**.
6. In the COM1 Properties dialog box, select the following settings:
   - Bits per second: 9600
   - Data bits: 8
   - Parity: None
   - Stop bits: 1
   - Flow control: Xon/Xoff
7. Click **OK**.

RELATED DOCUMENTATION

Setting Up Management Access on the CTP2000 Platform | 141
CTP2000 Console Port Setup | 142
Connecting Directly to the CTP2000 Platform | 144
CTP2000 Platform SSH Setup | 144

Connecting Directly to the CTP2000 Platform

When you connect a console directly to the device, use the COM 2 port on the RJ-45 connector. To do this, you must use the special DB-9 adapter with a straight-through RJ-45 cable. Direct access through the COM 2 serial port enables you to monitor the device while it boots.

To connect a console directly to the device:

1. Connect the socket DB-9 connector to the COM 2 port on the device's RTM.
2. Connect the crossover adapter connector to your PC's serial port.
3. Power on the device.

   When you power on the device, the CLI appears on your console's screen. You can begin configuration.

RELATED DOCUMENTATION

Setting Up Management Access on the CTP2000 Platform | 141
CTP2000 Console Port Setup | 142
Using HyperTerminal with the CTP2000 Platform | 143
CTP2000 Platform SSH Setup | 144
Required Tools, Wires, and Cables for the CTP2000 Platform | 127
CTP2000 Series Console Cable Pinouts | 79

CTP2000 Platform SSH Setup

When you have configured an IP address for the CTP2000 device, you can run SSH from a host to access the device through its Ethernet port. To connect the Ethernet port to the network:

1. Connect an RJ-45 cable to one of the two Ethernet ports of the CTP2000 chassis. This applies to the AC and DC power versions of the platform.
2. Connect the other end of the cable to the appropriate Ethernet network for an out-of-band connection.



CAUTION: Do not change the IP address for the Ethernet interface that you are using to communicate with the device. If you change the address, you will lose the SSH session.

RELATED DOCUMENTATION

- Setting Up Management Access on the CTP2000 Platform | **141**
- CTP2000 Console Port Setup | **142**
- Using HyperTerminal with the CTP2000 Platform | **143**
- Connecting Directly to the CTP2000 Platform | **144**

PART 5

Maintenance

Maintaining Components | 147

Product Reclamation and Recycling | 151

Replacing Fan Trays | 153

Packing and Returning Hardware | 155

CHAPTER 18

Maintaining Components

IN THIS CHAPTER

- Required Tools for Maintaining the CTP Platform | 147
- Storing CTP Modules and Other Components | 147
- Cleaning the CTP Platform | 148
- Replacing an AC Power Supply | 149

Required Tools for Maintaining the CTP Platform

You need the following tools and other items to replace platform components:

- Flathead and Phillips screwdrivers
- Insulated adjustable wrench
- Antistatic wrist strap
- Antistatic bags (or other protective packaging to hold components)
- Plastic boots or other protective covers for fiber-optic connectors

RELATED DOCUMENTATION

Storing CTP Modules and Other Components

Cleaning the CTP Platform | 148

Storing CTP Modules and Other Components

Retain the packaging in which a module or other component was shipped, and use this packaging to store the item. Modules are shipped in antistatic bags and protective packaging. Components, such as

transceivers and CompactFlash cards, are shipped in antistatic plastic containers within an antistatic padded box.

CAUTION: Failure to store electronic modules and components correctly can lead to damage of these items.

Follow these guidelines for storing modules and other components:

- Store each module in a separate antistatic bag.
- Store other components in an antistatic plastic container. Some of these containers can accommodate several components in separate compartments.
- Do not store multiple modules or other components in an antistatic bag or container where they can touch other items.
- (Optional) Store the item in its antistatic bag or container within the protective packaging or padded box that the item was shipped in.

RELATED DOCUMENTATION

Required Tools for Maintaining the CTP Platform | 147

Cleaning the CTP Platform | 148

Cleaning the CTP Platform

Dust is attracted to the area where the air intake vents are located. Clean the area with a dry cloth every few weeks to prevent excessive accumulation of dust. This cleaning helps to maintain the efficiency of the cooling system and to prevent damage to electronic components.

WARNING: Do not insert any metal object, such as a screwdriver, or place your hand into an open slot or the backplane when the device is on. Remove jewelry (including rings, necklaces, and watches) before working on equipment that is connected to power lines. These actions prevent electric shock and serious burns.

CAUTION: When cleaning the device, wear an antistatic wrist strap connected to an ESD grounding jack. This action helps to protect modules from damage by electrostatic discharge.

RELATED DOCUMENTATION

Required Tools for Maintaining the CTP Platform | 147

Storing CTP Modules and Other Components | 147

Replacing an AC Power Supply

Before you remove a power supply, be aware of the following:

- The minimum number of power supplies must be present in the router at all times.
- To maintain proper cooling and prevent thermal shutdown of the operating power supply unit, each power supply slot must contain either a power supply or a blank panel. If you remove a power supply, you must install a replacement power supply or a blank panel shortly after the removal.
- After powering off a power supply, wait at least 60 seconds before turning it back on.

To remove an AC power supply (see Figure 42 on page 150 for a representative AC power supply at the rear of the chassis):

1. Switch off the dedicated customer site circuit breaker for the power supply, and remove the power cord from the AC power source. Follow the instructions for your site.
2. Attach an electrostatic discharge (ESD) grounding strap to your bare wrist, and connect the strap to one of the ESD points on the chassis.
3. If the chassis has a power switch, move it to the off (**O**) position.
4. Unplug the power cord from the power source receptacle.
5. Unplug the power cord from the appliance inlet in the chassis above the power supply.
6. The AC power supply has a pull handle and a locking tab. Press the locking tab to the right while you pull the unit out using the handle.

Figure 42: Replacing an AC Power Supply

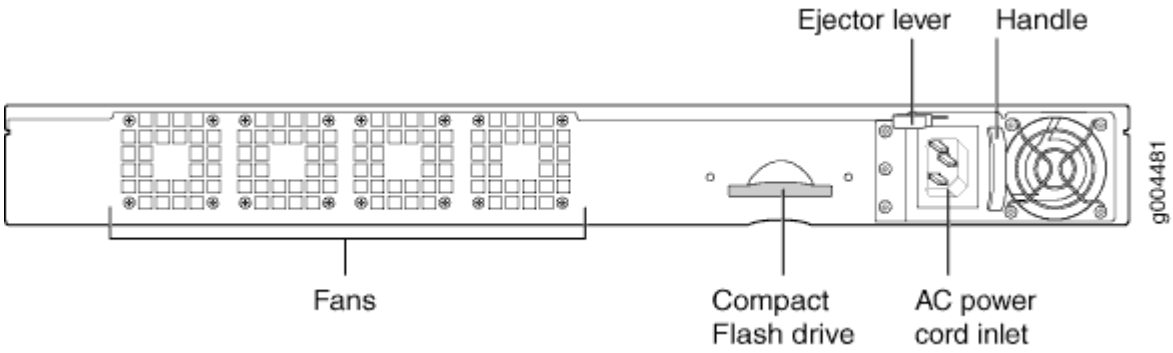

To install an AC power supply (see Figure 42 on page 150):

1. Move the AC input switch next to the appliance inlet on the power supply to the off (**O**) position.
2. Using both hands, slide the power supply straight into the chassis until the power supply is fully seated in the chassis slot. The power supply faceplate should be flush with any adjacent power supply faceplate or blank installed in the power supply slot.
3. Tighten both captive screws at the bottom of the power supply.
4. Attach the power cord to the power supply.
5. Attach the power cord to the AC power source, and switch on the dedicated customer site circuit breaker. Follow the instructions for your site.
6. If the chassis has a power switch, move it to the on (**|**) position.
7. Observe the status LEDs on the power supply faceplate. If the power supply is correctly installed and functioning normally, the **AC OK** and **DC OK** LEDs light steadily, and the **PS FAIL** LED is not lit.

RELATED DOCUMENTATION

Required Tools for Maintaining the CTP Platform | **147**

Storing CTP Modules and Other Components | **147**

Cleaning the CTP Platform | **148**

CHAPTER 19

Product Reclamation and Recycling

IN THIS CHAPTER

- Product Reclamation and Recycling Program | 151

Product Reclamation and Recycling Program

Juniper Networks is committed to environmentally responsible behavior. As part of this commitment, we continually work to comply with environmental standards such as the European Union's *Waste Electrical and Electronic Equipment* (WEEE) Directive and *Restriction of Hazardous Substances* (RoHS) Directive.

These directives and other similar regulations from countries outside the European Union regulate electronic waste management and the reduction or elimination of specific hazardous materials in electronic products. The WEEE Directive requires electrical and electronics manufacturers to provide mechanisms for the recycling and reuse of their products. The RoHS Directive restricts the use of certain substances that are commonly found in electronic products today. Restricted substances include heavy metals, including lead, and polybrominated materials. The RoHS Directive, with some exemptions, applies to all electrical and electronic equipment.

In accordance with Article 11(2) of Directive 2002/96/EC (WEEE), products put on the market after 13 August 2005 are marked with the following symbol or include it in their documentation: a crossed-out wheeled waste bin with a bar beneath.



Juniper Networks provides recycling support for our equipment worldwide to comply with the WEEE Directive. For recycling information, go to https://www.juniper.net/environmental, and indicate the type of Juniper Networks equipment that you wish to dispose of and the country where it is currently located, or contact your Juniper Networks account representative.

Products returned through our reclamation process are recycled, recovered, or disposed of in a responsible manner. Our packaging is designed to be recycled and should be handled in accordance with your local recycling policies.

RELATED DOCUMENTATION

Return Procedure | **155**

Returning CTP Products for Repair or Replacement | **156**

CHAPTER 20

Replacing Fan Trays

IN THIS CHAPTER

- Removing a CTP2000 Fan Tray | 153
- Installing a CTP2000 Fan Tray | 153

Removing a CTP2000 Fan Tray

To remove a fan tray:

1. With an appropriate screwdriver, loosen the captive screws located at the corners of the fan tray.

   WARNING: Do not place your fingers near the fans when removing the fan tray. The blades might still be moving.

2. Gently pull the fan tray out. Place one hand under the fan tray and the other on the front handle, and continue to pull it out of the chassis.

   Use two hands to hold the fan tray after it comes out of the chassis.

RELATED DOCUMENTATION

Installing a CTP2000 Fan Tray | 153

Installing a CTP2000 Fan Tray

To install the fan tray:

1. With two hands hold the tray vertically so that the captive screws point toward you.

2. Place the side edge of the tray housing in the fan tray compartment, and push toward the back of the chassis until the tray stops.

   An electrical connector on the back of the fan tray pairs with an electrical connector at the back of the shelf.

3. With an appropriate screwdriver, tighten the captive screws.

   Alternate between screws when tightening them to ensure that the electrical connectors at the back of the tray fit tightly.

RELATED DOCUMENTATION

Removing a CTP2000 Fan Tray | 153

CHAPTER 21

Packing and Returning Hardware

IN THIS CHAPTER

- Return Procedure | 155
- Returning CTP Products for Repair or Replacement | 156

Return Procedure

When you need to return a component:

1. Determine the part number and serial number of the component. For instructions, see "Locating CTP Component Serial Numbers" on page 162.
2. Obtain a Return Materials Authorization (RMA) number from the Juniper Networks Technical Assistance Center (JTAC). See "Information You Might Need to Supply to JTAC" on page 162.

   Provide the following information in your e-mail message or during the telephone call:

   - Part number and serial number of component
   - Your name, organization name, telephone number, and fax number
   - The shipping address for the replacement component, including contact name and phone number
   - Description of the failure

   The support representative validates your request and issues an RMA number for return of the component.
3. Pack the device or component for shipment, performing the procedure described in "Returning CTP Products for Repair or Replacement" on page 156.

RELATED DOCUMENTATION

Returning CTP Products for Repair or Replacement | 156

Contacting Customer Support | 161

Returning CTP Products for Repair or Replacement

In the event of a hardware failure, please contact Juniper Networks to obtain a Return Material Authorization (RMA) number. This number is necessary to ensure proper tracking and handling of returned material at the factory. Do not return any hardware until you have received an RMA. Juniper Networks reserves the right to refuse shipments that do not have an RMA. Refused shipments are returned to the shipper through collect freight.

If possible, use the original shipping crate, pallet, and packing materials in which the chassis was originally shipped. If these materials are unavailable, use comparable shipping material, or contact your Juniper Networks representative for information about approved packaging material.

See the customer support Web page for complete repair and return policies and procedures.

To pack the chassis for shipment:

1. Ground yourself by using an antistatic wrist strap or other device.
2. Issue the proper shutdown commands to halt your system.
3. Switch all power switches to the OFF position.
4. Remove all cables from the chassis.
5. Remove all major components from the chassis, including interface modules, processor modules, RTMs, and fan trays.
6. Remove the chassis from the rack and bolt it to the shipping pallet.
7. Cover the chassis with an ESD bag and place packing foam on top of and around the chassis.
8. Place the crate cover over the chassis and fasten the cover to the pallet.

RELATED DOCUMENTATION

Contacting Customer Support | 161

Return Procedure | 155

Locating CTP Component Serial Numbers | 162

Information You Might Need to Supply to JTAC | 162

PART 6

Troubleshooting

Troubleshooting Power Failures | 158

Contacting Customer Support | 161

CHAPTER 22

Troubleshooting Power Failures

IN THIS CHAPTER

- CTP Platform Does Not Power On | 158
- CTP Platform Shuts Down | 159

CTP Platform Does Not Power On

IN THIS SECTION

- Problem | 158
- Solution | 158

Problem

Description

Symptoms

- Device is not receiving power.
- Module's power supply has malfunctioned.
- Power source cannot handle system load.

Solution

1. Verify that all power connections are correct.

2. Verify that the power supply is delivering the correct voltage, current, and wattage to the device. See the system specifications for your particular CTP Series platform.
3. If the platform still does not operate, contact the Juniper Networks Technical Assistance Center (JTAC).

RELATED DOCUMENTATION

CTP Platform Shuts Down | 159

CTP Platform Shuts Down

IN THIS SECTION

Problem | 159
Solution | 159

Problem

Description

Symptoms

- Temperature is too high.
- Power is lost.

Solution

1. Verify that power connections are properly attached.
2. Verify that device is receiving power.
3. Look to see whether or not the LEDs are lit.
4. Run diagnostics using the CLI.

5. If the device does not reset, contact JTAC.

RELATED DOCUMENTATION

CTP Platform Does Not Power On | 158

CHAPTER 23

Contacting Customer Support

IN THIS CHAPTER

- Contacting Customer Support | 161
- Locating CTP Component Serial Numbers | 162
- Information You Might Need to Supply to JTAC | 162

Contacting Customer Support

See the Juniper Networks Web site for complete customer service information:

- https://support.juniper.net/support/

For your convenience, we provide multiple options for requesting and receiving technical support from the Juniper Networks Technical Assistance Center (JTAC):

- By the Web using Juniper Networks, Inc. Service Request Manager:

  https://support.juniper.net/support

- By telephone:

  From the US, Canada, and Mexico at 1–888–314–JTAC

  From all other locations at 408–745–9500

RELATED DOCUMENTATION

Return Procedure | 155

Locating CTP Component Serial Numbers | 162

Information You Might Need to Supply to JTAC | 162

Returning CTP Products for Repair or Replacement | 156

Locating CTP Component Serial Numbers

Before contacting Juniper Networks to request a Return Materials Authorization (RMA), you must find the serial number on the chassis or component.

Serial numbers are located on the modules. ID labels are usually applied near the ejector.

RELATED DOCUMENTATION

- Contacting Customer Support | 161
- Return Procedure | 155
- Information You Might Need to Supply to JTAC | 162
- Returning CTP Products for Repair or Replacement | 156

Information You Might Need to Supply to JTAC

When requesting technical support from JTAC by phone, be prepared to provide the following information:

- Priority level
- Indication of what activity was being performed on the device when the problem occurred
- Problem detail and configuration data

When a new request for technical support is submitted, the JTAC engineer:

1. Opens a case and assigns a number.
2. Begins troubleshooting, diagnostics, and problem replication (if appropriate).
3. Provides you with periodic updates on problem status and escalates the problem as appropriate according to escalation management guidelines.
4. Closes the case when you agree that the problem has been resolved.

RELATED DOCUMENTATION

- Contacting Customer Support | 161
- Return Procedure | 155

Locating CTP Component Serial Numbers | 162

Returning CTP Products for Repair or Replacement | 156