Hyperflex Universal Security Kiosk w/ Power Bank Holder for Medium Tablets

PAD-HSKSBP

INSTALLATION - MANUAL

CONTENTS :

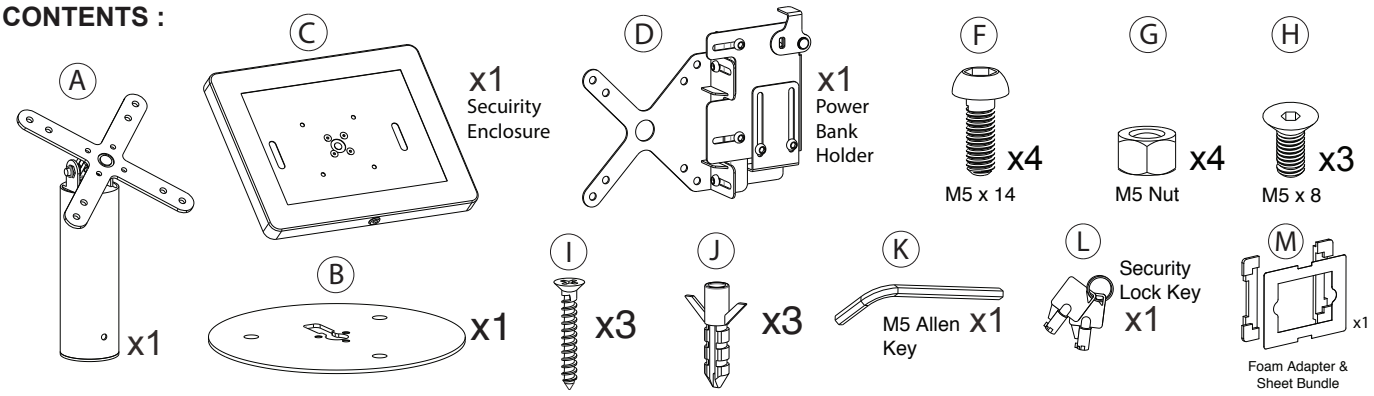

INSTALLATION:

1.Assembling base to body :

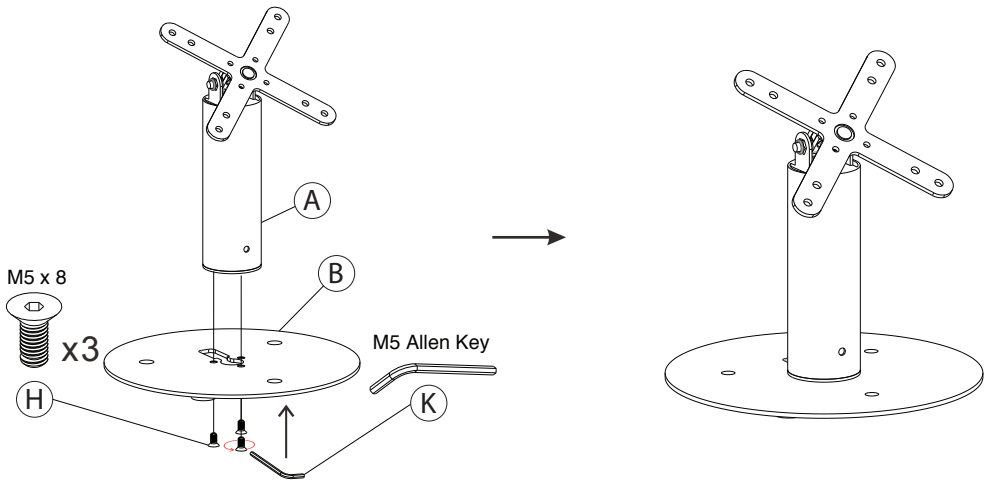

1A - Align holes at the base (B) with the holes on the base of the body (A). Rotate in screws (H) with provided allen key tool (K) until securely tightened. As shown above.

2. (Optional) Fasten to create a fixed setup:

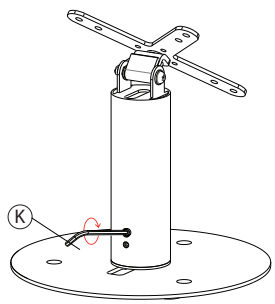

2A - Using provided tool (K), rotate clockwise at the shown location on kiosk body to create a locked fixed setup. Rotate until securely tightened.

3. (Optional) Mounting to surface top :

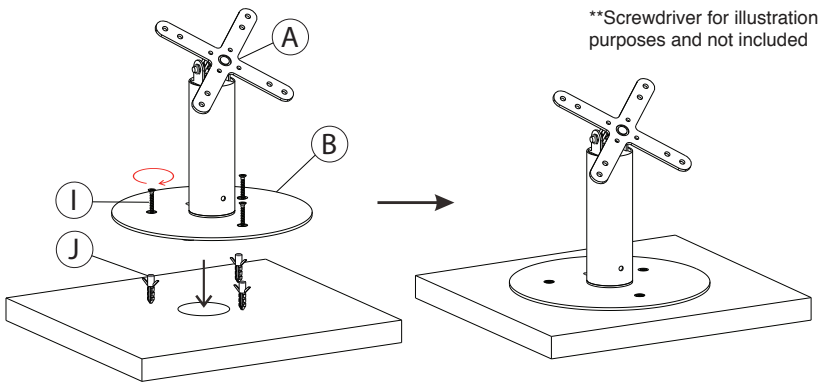

3A - Using a screwdriver (not included) rotate in screws (I) with anchors (J) until securely bolted into surface top.

36 Taaffe Place Brooklyn, NY 11205 support@ctadigital.com 778-991-0169 www.ctadigital.com

4. Setting up PowerBank into Holder

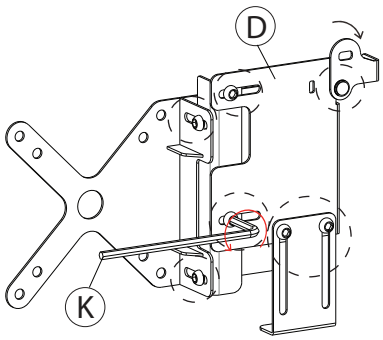

4A. Using the provided allen key tool (K) , slightly loosen all the joints on the holder (D) so you can flex the size with your hands. (Joints are shown with dash circles)

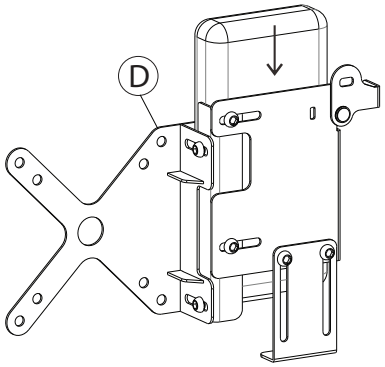

4B. Insert your powerbank into the holder (D).

***Powerbank is for illustration purposes and not included*

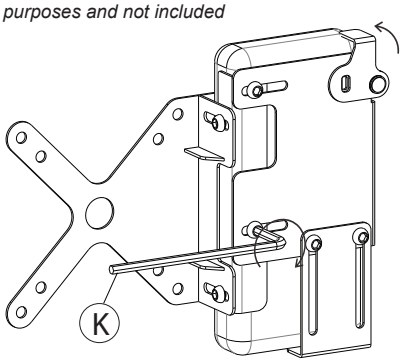

4C. Slide and adjust all the holder components (D) until they are a tight secure fit. Rotate all the joint screws after fitting until they are securely tightened with provided Allen key tool (K).

5.Attaching enclosure to Power bank holder to kiosk :

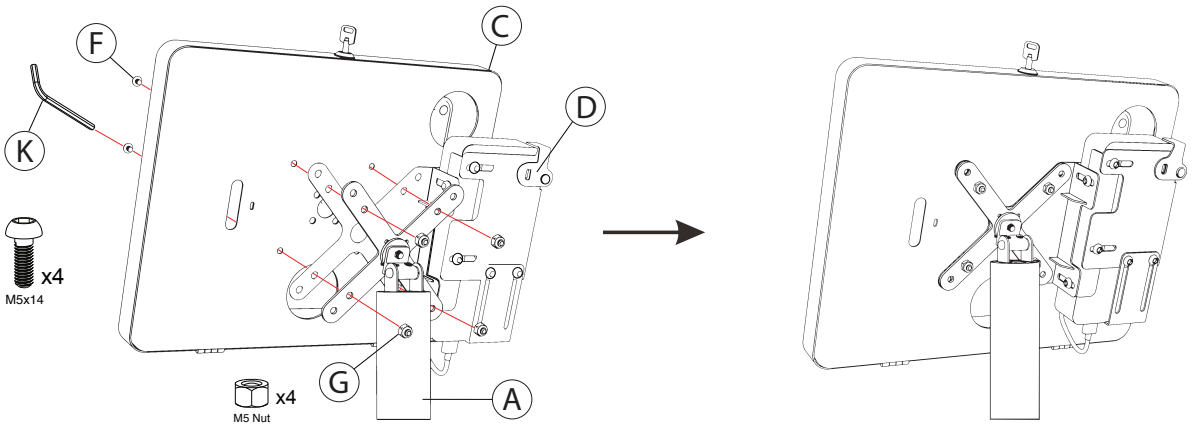

5A. Align VESA holes of enclosure (C) with VESA holes in power bank holder (D) to the VESA holes of kiosk (A,B). Rotate in screws (F) from front using included allen key tool (K) while holding hex nuts (G) from behind with your hand. Continue rotating until securely tightened.As shown above.

6. Setting up Device & Enclosure :

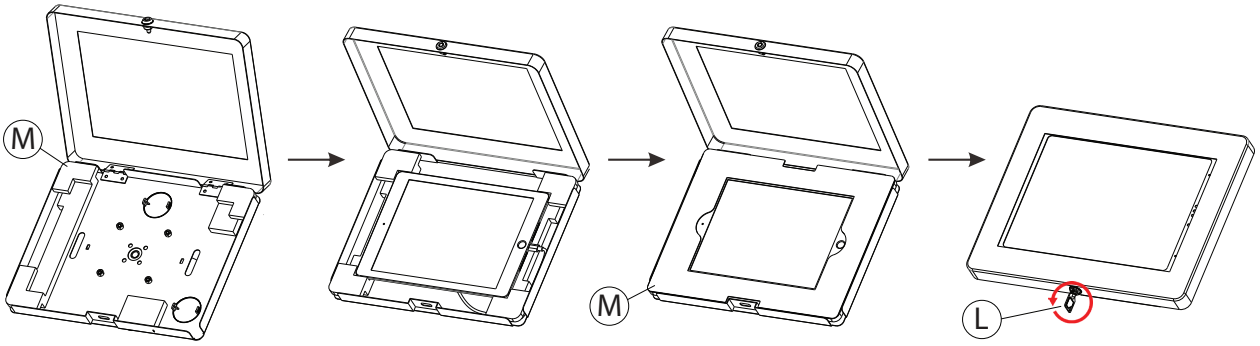

6A. Insert the appropriate foam piece (M) that is compatible with your tablet.

6B. Insert tablet as shown. Plug in power cable to tablet and cable route through the back.

6C.Place the appropriate provided tablet cover (M) to match your tablet.

6D.Close the enclosure and lock it with the included set of keys (L).

36 Taaffe Place Brooklyn, NY 11205 support@ctadigital.com 778-991-0169 www.ctadigital.com