Hardware Reference Guide

SUMMARY

This guide provides information about components, network connection, power management, security, backing up, and more.

Legal information

© Copyright 2021, 2022 HP Development Company, L.P.

Intel is a trademark of Intel Corporation or its subsidiaries in the U.S. and/or other countries. Microsoft and Windows are either registered trademarks or trademarks of Microsoft Corporation in the United States and/or other countries. USB Type-C and USB-C are registered trademarks of USB Implementers Forum.

The information contained herein is subject to change without notice. The only warranties for HP products and services are set forth in the express warranty statements accompanying such products and services. Nothing herein should be construed as constituting an additional warranty. HP shall not be liable for technical or editorial errors or omissions contained herein.

Second Edition: May 2022

First Edition: November 2021

Document Part Number: M86247-002

Product Notice

This guide describes features that are common to most models. Some features may not be available on your computer.

Not all features are available in all editions or versions of Windows. Systems may require upgraded and/or separately purchased hardware, drivers, software or BIOS update to take full advantage of Windows functionality. Windows is automatically updated, which is always enabled. High-speed internet and Microsoft account required. ISP fees may apply and additional requirements may apply over time for updates. See http://www.windows.com. **If your product ships with Windows in S Mode:** Windows in S Mode works exclusively with apps from the Microsoft Store within Windows. Certain default settings, features, and apps cannot be changed. Some accessories and apps that are compatible with Windows may not work (including some antivirus, PDF writers, driver utilities, and accessibility apps), and performance may vary, even if you switch out of S Mode. If you switch to Windows, you cannot switch back to S Mode. Learn more at Windows.com/SmodeFAQ.

To access the latest user guides, go to http://www.hp.com/support, and follow the instructions to find your product. Then select **Manuals**.

Software terms

By installing, copying, downloading, or otherwise using any software product preinstalled on this computer, you agree to be bound by the terms of the HP End User License Agreement (EULA). If you do not accept these license terms, your sole remedy is to return the entire unused product (hardware and software) within 14 days for a full refund subject to the refund policy of your seller.

For any further information or to request a full refund of the price of the computer, please contact your seller.

About this guide

This guide provides basic information for using and upgrading this product.

WARNING! Indicates a hazardous situation that, if not avoided, **could** result in serious injury or death.

CAUTION: Indicates a hazardous situation that, if not avoided, **could** result in minor or moderate injury.

IMPORTANT: Indicates information considered important but not hazard-related (for example, messages related to property damage). Warns the user that failure to follow a procedure exactly as described could result in loss of data or in damage to hardware or software. Also contains essential information to explain a concept or to complete a task.

NOTE: Contains additional information to emphasize or supplement important points of the main text.

TIP: Provides helpful hints for completing a task.

Table of contents

1 Computer features 1
Standard configuration features 1
Front panel components on 45L models 2
Front panel components on 40L models 2
Rear panel components on 45L models 3
Rear panel components on 40L models 4
2 Hardware setup 6
Warnings and cautions 6
Preparation for disassembly 6
Chassis feet 7
Glass access panel 8
System memory 9
Populating DIMM sockets 9
Replacing or installing DIMMs 10
Solid-state drive 11
Graphics card 14
WLAN module 17
Front bezel 19
Dust filter 20
Right access panel 22
Hard drive 24
RGB logo module in 45L models 26
RGB logo module in 40L models 30
RGB board 31
Front RGB fans 34
Internal light bar 37
Power supply 39
Upgrade options 42
Fan and liquid cooling upgrade locations 42
Fan and liquid cooling upgrade locations 43
Cryo chamber (45L models only) 43
Front 240 mm fan or radiator 46
Using non-HP ATX system boards 47
Stand-alone chassis configuration 48
Top I/O cabling 48

Lighting board cabling 50
Rear fan cabling 52
Screw kit 52

3 Backing up, restoring, and recovering 54

Backing up information and creating recovery media 54
Using Windows tools for backing up 54
Using the HP Cloud Recovery Download Tool to create recovery media (select products only) 54

Restoring and recovering your system 54
Creating a system restore 55
Restoring and recovery methods 55
Recovering using HP Recovery media 55
Changing the computer boot order 56
Using HP Sure Recover (select products only) 56

4 Using HP PC Hardware Diagnostics 57

Using HP PC Hardware Diagnostics Windows (select products only) 57
Using an HP PC Hardware Diagnostics Windows hardware failure ID code 57
Accessing HP PC Hardware Diagnostics Windows 57
Accessing HP PC Hardware Diagnostics Windows from HP Help and Support (select products only) 57
Accessing HP PC Hardware Diagnostics Windows from Support Assistant 58
Accessing HP PC Hardware Diagnostics Windows from the Start menu (select products only) 58
Downloading HP PC Hardware Diagnostics Windows 58
Downloading the latest HP PC Hardware Diagnostics Windows version from HP 58
Downloading the HP PC Hardware Diagnostics Windows from the Microsoft Store 58
Downloading HP Hardware Diagnostics Windows by product name or number (select products only) 59
Installing HP PC Hardware Diagnostics Windows 59

Using HP PC Hardware Diagnostics UEFI 59
Using an HP PC Hardware Diagnostics UEFI hardware failure ID code 59
Starting HP PC Hardware Diagnostics UEFI 60
Downloading HP PC Hardware Diagnostics UEFI to a USB flash drive 60
Downloading the latest HP PC Hardware Diagnostics UEFI version 60
Downloading HP PC Hardware Diagnostics UEFI by product name or number (select products only) 60

Using Remote HP PC Hardware Diagnostics UEFI settings (select products only) 61
Downloading Remote HP PC Hardware Diagnostics UEFI 61
Downloading the latest Remote HP PC Hardware Diagnostics UEFI version 61
Downloading Remote HP PC Hardware Diagnostics UEFI by product name or number 61
Customizing Remote HP PC Hardware Diagnostics UEFI settings 61

5 Computer operating guidelines, routine care, and shipping preparation 63

Operating guidelines and routine care 63

Cleaning your computer 63
Removing dirt and debris from your computer 64
Cleaning your computer with a disinfectant 64

Shipping preparation 65

6 Electrostatic discharge 66

7 Accessibility 67

HP and accessibility 67
Finding the technology tools you need 67
The HP commitment 67
International Association of Accessibility Professionals (IAAP) 68
Finding the best assistive technology 68
Assessing your needs 68
Accessibility for HP products 68
Standards and legislation 69
Standards 69
Mandate 376 – EN 301 549 69
Web Content Accessibility Guidelines (WCAG) 69
Legislation and regulations 69
Useful accessibility resources and links 70
Organizations 70
Educational institutions 70
Other disability resources 70
HP links 71
Contacting support 71
Index 72

1 Computer features

This chapter provides you with an overview of your computer's features.

Standard configuration features

To identify a typical computer configuration, read this section. Features vary depending on the model. For support assistance and to learn more about the hardware and software installed on your computer model, run the HP Support Assistant utility.

45L model



40L model



Front panel components on 45L models

To identify the front panel components, use this illustration and table.

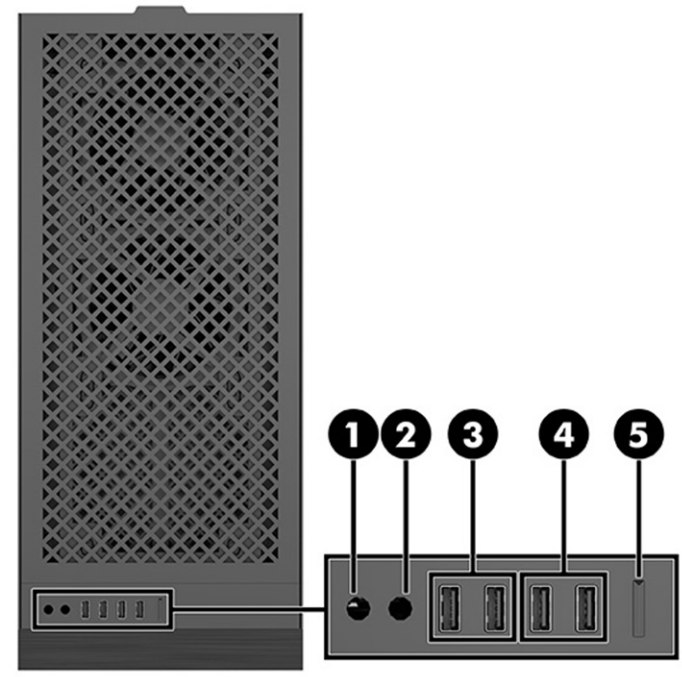



Table 1-1 Identifying the front panel components

Front panel components					
1		Audio-out (headphone jack)	4		USB ports
2		Audio-in (microphone) jack	5		Power button
3		USB SuperSpeed 5 Gbps ports with HP Sleep and Charge (2)	6		Side cover locks

Front panel components on 40L models

To identify the front panel components, use this illustration and table.

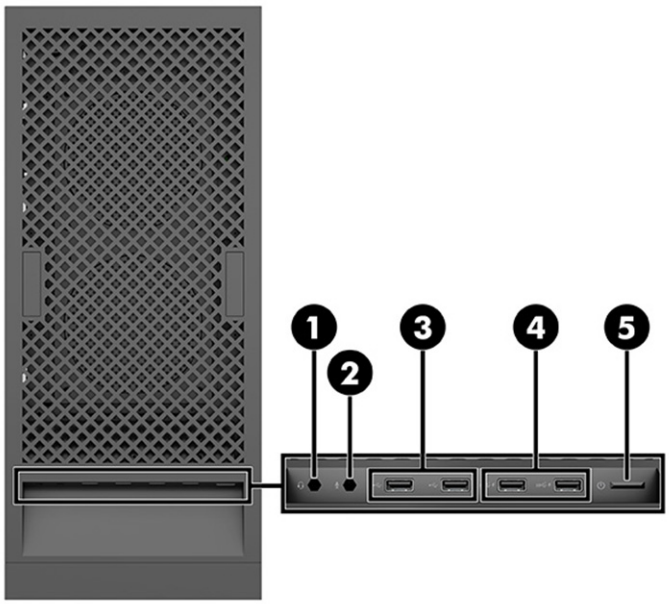



Table 1-2 **Identifying the front panel components**

Front panel components					
1		Audio-out (headphone jack)	4		USB SuperSpeed 5 Gbps ports with HP Sleep and Charge (2)
2		Audio-in (microphone) jack	5		Power button
3	SS	USB ports	6		Side cover locks

Rear panel components on 45L models

To identify the rear panel components, use this illustration and table.

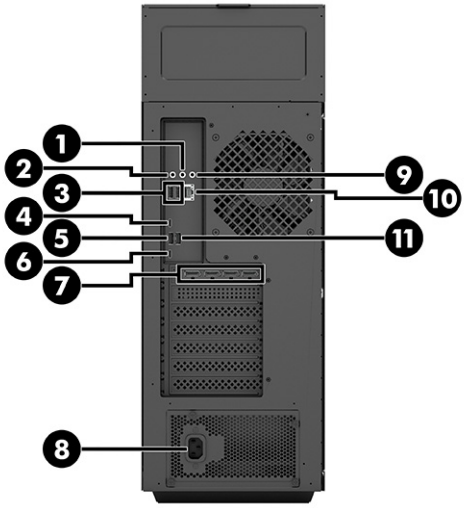

Table 1-3 Identifying the rear panel components

Rear panel components					
1		Audio-out jack	7		Graphics card ports (select products only)
2		Audio-in (microphone) jack	8		Power connector
3		USB ports (2)	9		Audio-in jack
4		USB Type-C SuperSpeed 5 Gbps port (Intel models) USB Type-C SuperSpeed 10 Gbps port (AMD models)	10		RJ-45 (network) jack
5		USB SuperSpeed 10 Gbps port	11		USB SuperSpeed 5 Gbps port
6		USB Type-C SuperSpeed 10 Gbps port (Intel models) USB Type-C SuperSpeed 5 Gbps port (AMD models)			

Rear panel components on 40L models

To identify the rear panel components, use this illustration and table.

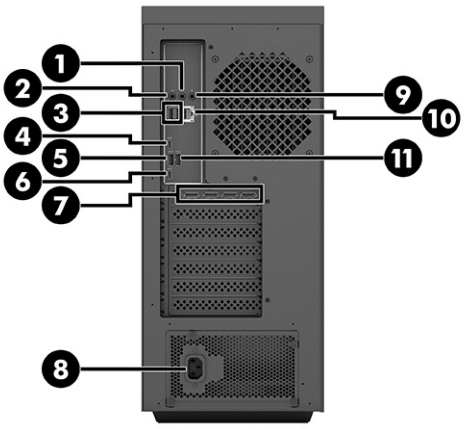

Table 1-4 Identifying the rear panel components

Rear panel components					
1		Audio-out jack	7		Graphics card ports (select products only)
2		Audio-in (microphone) jack	8		Power connector
3		USB ports (2)	9		Audio-in jack
4		USB Type-C SuperSpeed 5 Gbps port (Intel models) USB Type-C SuperSpeed 10 Gbps port (AMD models)	10		RJ-45 (network) jack
5		USB SuperSpeed 10 Gbps port	11		USB SuperSpeed 5 Gbps port
6		USB Type-C SuperSpeed 10 Gbps port (Intel models) USB Type-C SuperSpeed 5 Gbps port (AMD models)			

2 Hardware setup

This chapter provides removal and replacement procedures for commonly replaced parts.

NOTE: Computer appearance and procedures may vary from OMEN by HP 45L ATX Case models.

Cables in OMEN by HP 45L ATX Case models are designed to fit OMEN 45L and 40L models. You might need extension cables to fit system boards from retail markets.

Variance in lighting brightness and color may be noticeable between different brands of RGB and ARGB lighting components or when a Y cable is used for wire routing between a pin header to multiple lighting components.

Warnings and cautions

Before performing upgrades, be sure to carefully read all of the applicable instructions, cautions, and warnings.

WARNING! To reduce the risk of personal injury from electric shock, hot surfaces, or fire:

Unplug the power cord from the AC outlet and allow the internal system components to cool before you touch them.

Do not disable the power cord grounding plug. The grounding plug is an important safety feature.

Plug the power cord into a grounded (earthed) outlet that is easily accessible at all times.

To reduce the risk of serious injury, read the *Safety & Comfort Guide*. It describes proper workstation setup and provides guidelines for posture and work habits that increase your comfort and decrease your risk of injury. It also provides electrical and mechanical safety information. The Safety & Comfort Guide is located on the HP website at http://www.hp.com/ergo.

WARNING! The inside of the computer includes energized and moving parts.

Disconnect power to the equipment before removing the access panel.

Replace and secure the access panel before re-energizing the equipment.

IMPORTANT: Static electricity can damage the electrical components of the computer or optional equipment. Before beginning the following procedures, be sure that you are discharged of static electricity by briefly touching a grounded metal object. See Electrostatic discharge on page 66 for more information.

Preparation for disassembly

Use this information to properly prepare to disassemble and reassemble the computer.

1. Remove all removable media, such as a USB flash drive, from the computer.
2. Turn off the computer. If you are unsure whether the computer is off or in Hibernation, turn the computer on, and then shut it down through the operating system.

IMPORTANT: Turn off the computer before disconnecting any cables.

Regardless of the power state, voltage is always present on the system board as long as the system is plugged into an active AC outlet. In some systems, the cooling fan is on even when the computer is in the Standby or Suspend modes. Always disconnect the power cord before servicing a unit.

3. Unplug the power cord from the AC outlet and disconnect any external devices.

IMPORTANT: When the computer is plugged into an AC power source, voltage is always applied to the system board. To prevent damage to internal components, you must unplug the power cord from the power source before opening the computer.

CAUTION: Beware of sharp edges inside the chassis.

NOTE: During disassembly, label each cable as you remove it, and note its position and routing. Keep all screws with the removed components.

Chassis feet

To remove and install the chassis feet, use these procedures and illustrations.

1. Prepare the computer for disassembly (see Preparation for disassembly on page 6).
2. To remove the computer feet:
   1. Use a tool to release the rubber strips from the feet **(1)**.
   2. Remove the two Phillips screws from each foot **(2)**, and then remove the feet from the computer **(3)**.

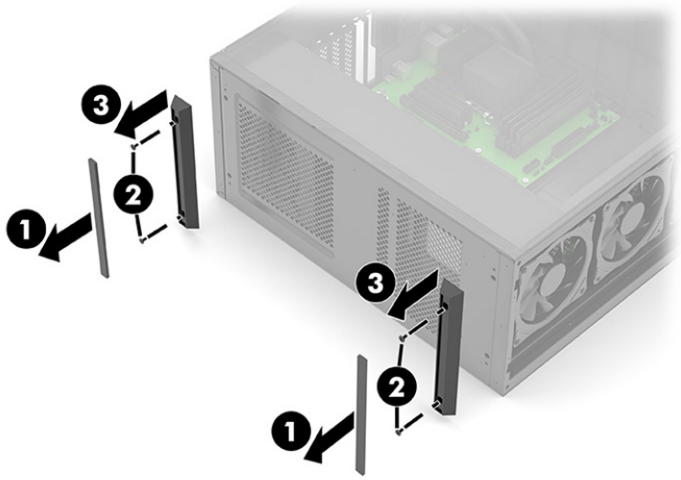

3. To install the computer feet:
   1. Position the feet on the computer **(1)**.
   2. Install the two Phillips screws **(2)** into each foot.

3. Install a rubber strip on top of each foot **(3)**.

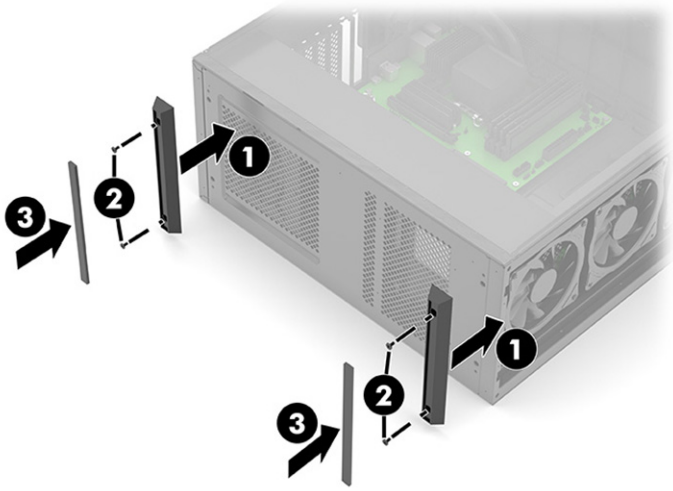

Glass access panel

To remove and install the glass access panel, use these procedures and illustrations.

1. Prepare the computer for disassembly (see Preparation for disassembly on page 6).
2. To remove the glass access panel:
   1. Press the release button **(1)**.
   2. After the top of the panel rotates outward **(2)**, pull it up to remove it.

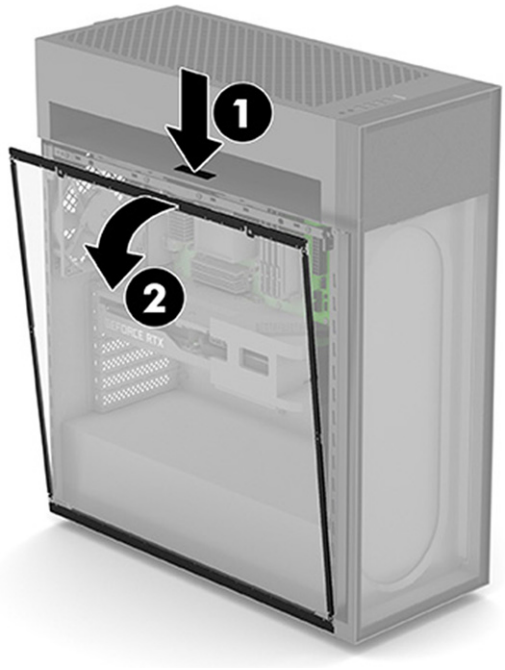

3. To install the glass access panel:

1. Insert the bottom of the panel into the groove in the bottom of the computer **(1)**.
2. Rotate the top of the panel until it clicks into place onto the computer **(2)**.

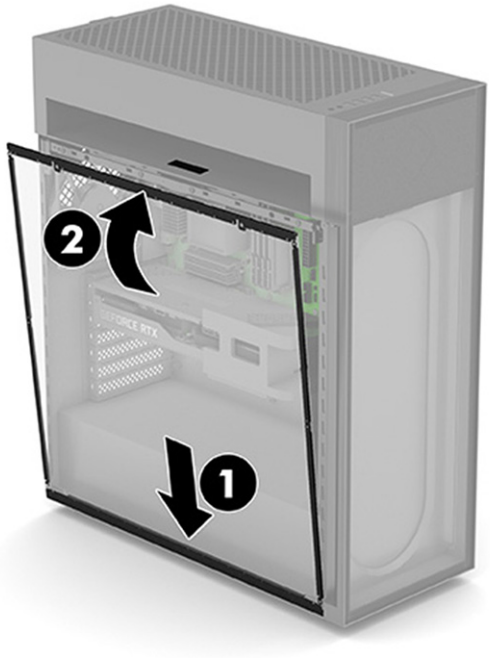

System memory

The computer uses double data rate 4 synchronous dynamic random access memory (DDR4-SDRAM) dual inline memory modules (DIMMs). There are four memory sockets on the system board that can be populated with up to 64 GB of memory.

For proper system operation, the DIMMs must adhere to the following specifications:

- UDIMMs
- Industry-standard 288-pin
- HyperX DDR4-3733 Intel® Extreme Memory Profile (XMP) memory
- Contain the mandatory Joint Electronic Device Engineering Council (JEDEC) specification

The computer supports the following:

- 512 Mbit, 1 Gbit, 2 Gbit, 4 Gbit, and 8 Gbit non-ECC memory technologies
- Single-sided DIMMs

NOTE: The system will not operate properly if you install unsupported DIMMs.

Populating DIMM sockets

There are four DIMM sockets on the system board, with two sockets per channel. The sockets are labeled DIMM1, DIMM2, DIMM3, and DIMM4. The DIMM1 and DIMM3 sockets operate in memory channel A. The DIMM2 and DIMM4 sockets operate in memory channel B.

For improved performance, install memory modules in the following order: DIMM 4-2-3-1. Note that DIMM 1 is the slot closest to the processor.

The system will automatically operate in single-channel mode, dual-channel mode, or flex mode, depending on how the DIMMs are installed.

- The system will operate in single-channel mode if the DIMM sockets are populated in one channel only.
- The system will operate in the higher-performing dual-channel mode if the memory capacity of the DIMM in Channel A is equal to the memory capacity of the DIMM in Channel B.
- The system will operate in flex mode if the memory capacity of the DIMM in Channel A is not equal to the memory capacity of the DIMM in Channel B. In flex mode, the channel populated with the least amount of memory describes the total amount of memory assigned to dual channel and the remainder is assigned to single channel. If one channel will have more memory than the other, the larger amount should be assigned to channel A.
- In any mode, the maximum operational speed is determined by the slowest DIMM in the system.

Replacing or installing DIMMs

To replace or install memory modules, use these procedures and illustrations.

IMPORTANT: You must disconnect the power cord and wait approximately 30 seconds for the power to drain before adding or removing memory modules. Regardless of the power state, voltage is always supplied to the memory modules as long as the computer is plugged into an active AC outlet. Adding or removing memory modules while voltage is present can cause irreparable damage to the memory modules or system board.

When handling a memory module, be careful not to touch any of the contacts. Doing so can damage the module.

The memory module sockets have gold-plated metal contacts. When upgrading the memory, use memory modules with gold-plated metal contacts to prevent corrosion, oxidation, or both, resulting from having incompatible metals in contact with each other.

Static electricity can damage the electronic components of the computer or optional cards. Before beginning these procedures, be sure that you are discharged of static electricity by briefly touching a grounded metal object.

Remove and install computer memory:

1. Prepare the computer for disassembly (see Preparation for disassembly on page 6).
2. Remove the glass access panel (see Glass access panel on page 8).
3. Position the computer with the system board facing upward.

4. To remove a DIMM, press outward on the latches on the sides of the DIMM **(1)**, and then pull the DIMM out of the socket **(2)**.

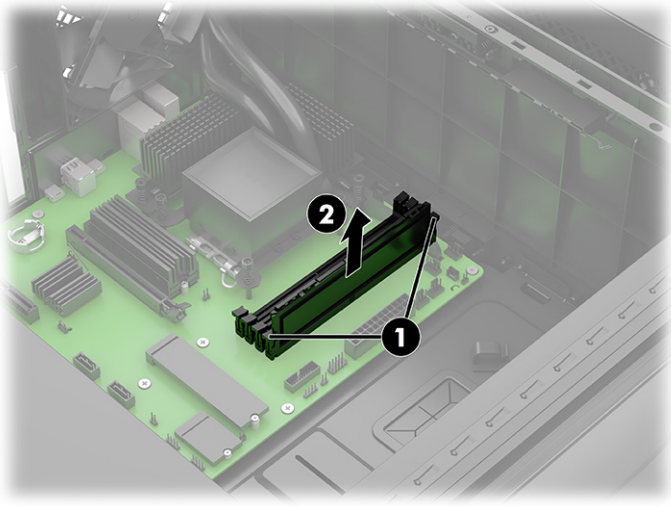

5. To install a DIMM, insert the module into the socket **(1)**, and press down evenly until the latches lock it in place **(2)**.

NOTE: You can install a memory module in only one way. Match the notch on the module with the tab on the memory socket.

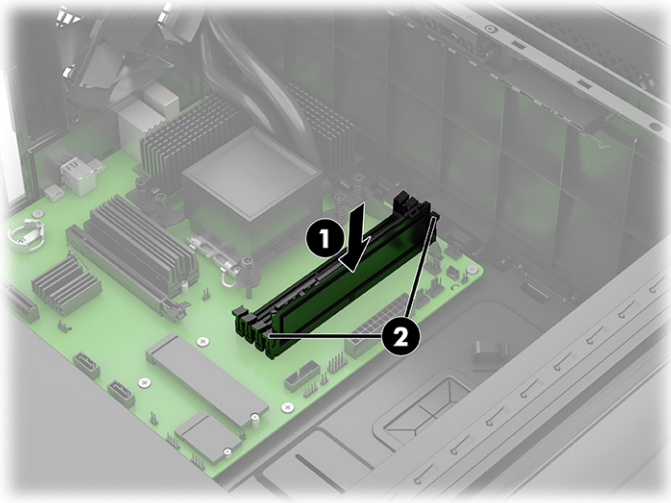

The computer automatically recognizes the new memory.

If non-HP HyperX XMP memory is used, additional memory settings become available in F10 Setup.

Solid-state drive

To remove the solid-state drive, use these procedures and illustrations. Some solid-state drives require use of a heat sink.

1. Prepare the computer for disassembly (see Preparation for disassembly on page 6).

2. Remove the glass access panel (see Glass access panel on page 8).
3. If necessary, remove the graphics card (see Graphics card on page 14).
4. Position the computer with the system board facing upward.
5. To remove a solid-state drive:
   - (Models without a heat sink) Remove the Phillips screw that secures the drive **(1)**, and then pull the drive out of the system board connector **(2)**.

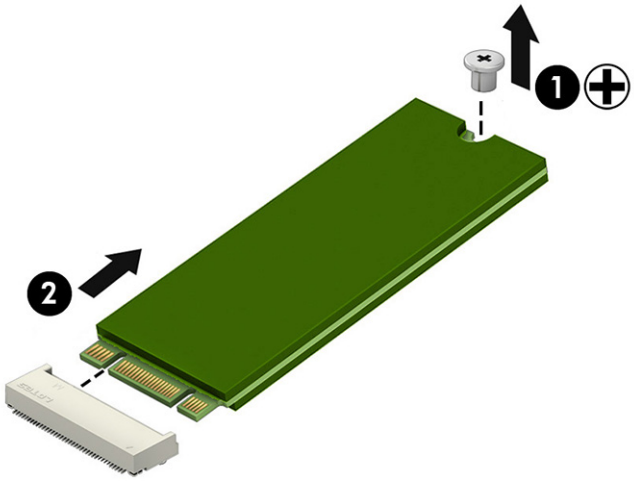

1. (Models with a heat sink) Remove the Phillips screw that secures the drive **(1)**, and then pull the drive out of the system board connector **(2)**.

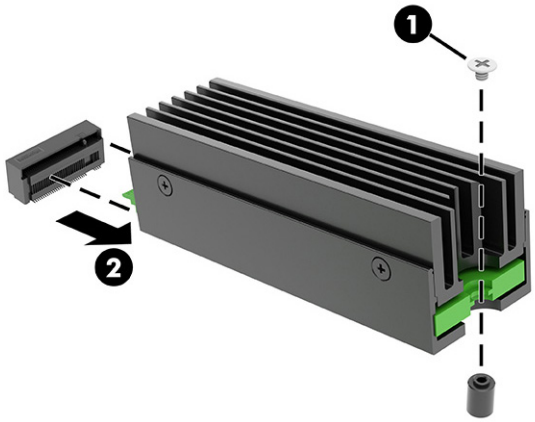

2. (Models with a heat sink) Remove the four Phillips screws **(1)**, and then remove the heat sink **(2)** and the solid-state drive **(3)** from the holder. Be sure to reuse the thermal pad by keeping it adhered to both the heat sink and the holder instead of the solid-state drive.

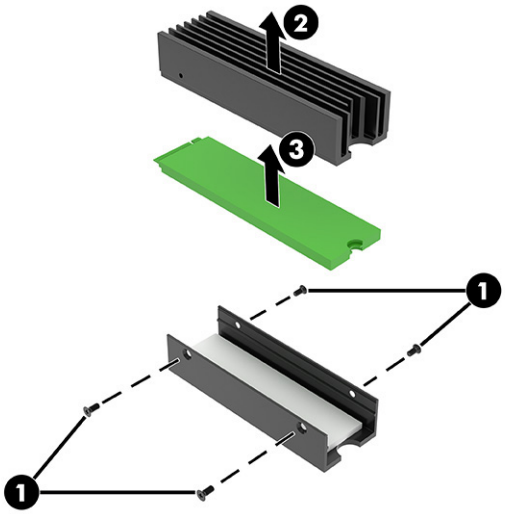

6. To install a solid-state drive:

1. (Models without a heat sink) Insert the drive into the connector **(1)**, and then install the Phillips screw **(2)**.

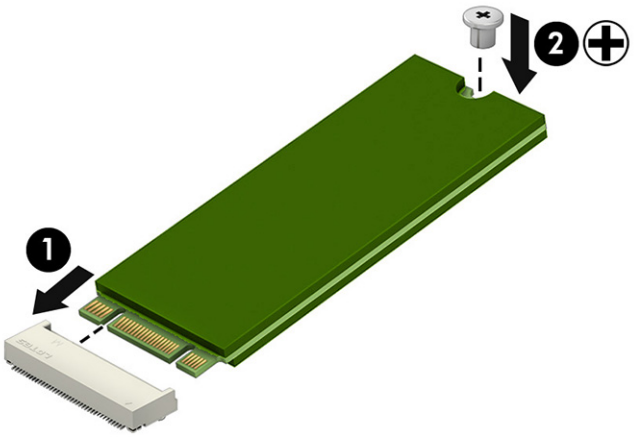

2. (Models with a heat sink) Insert the solid-state drive **(1)** and the heat sink **(2)** into the holder, and then install the screws **(3)**. Align the printed circuit board (PCB) of the solid-state drive with the heat sink and holder on the screw side.

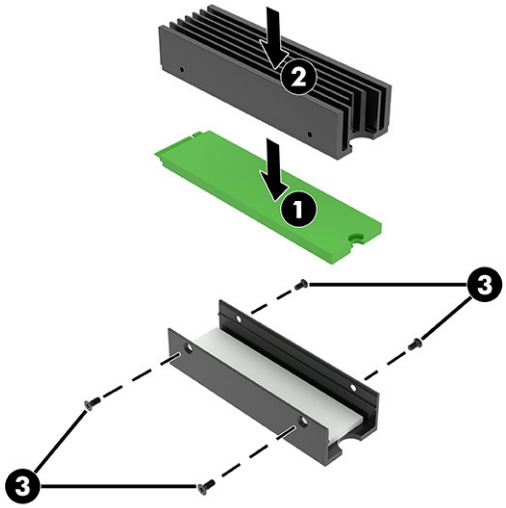

3. (Models with a heat sink) Install the solid-state drive, insert the drive into the connector **(1)**, and then install the Phillips screw **(2)**.

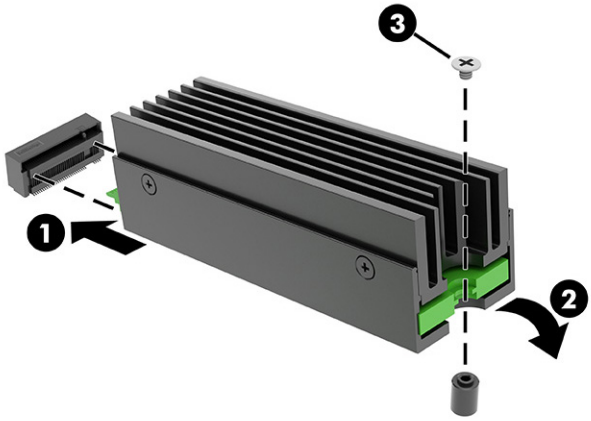

Graphics card

To remove the graphics card, use these procedures and illustrations.

1. Prepare the computer for disassembly (see Preparation for disassembly on page 6).
2. Remove the glass access panel (see Glass access panel on page 8).
3. To remove a graphics card:
    1. Position the computer with the system board facing upward (under the glass access panel).

2. (Models with an average length graphics card) Loosen the two captive Phillips screws from the base of the graphics card bracket (1). Slide the bracket away from the graphics card (2). The bracket remains connected to the computer.

NOTE: Because graphics cards can have differing dimensions, two different brackets are available with varying thicknesses.

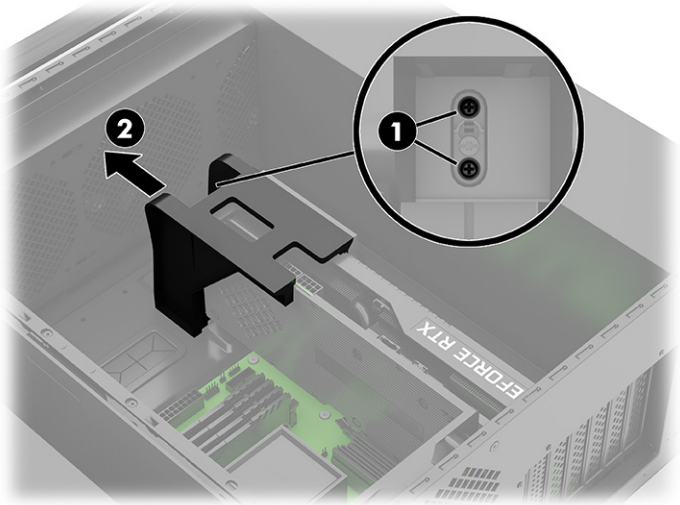

3. (Models with a long graphics card) Remove the two Phillips screws **(1)** from the bracket, and then slide the bracket away from the graphics card **(2)**. Slide the bracket about 3 mm (1/8 inch) so that the Torx screw that holds the bracket moves to the larger slot in the bottom of the bracket **(3)**, and then lift the bracket out of the computer **(4)**.

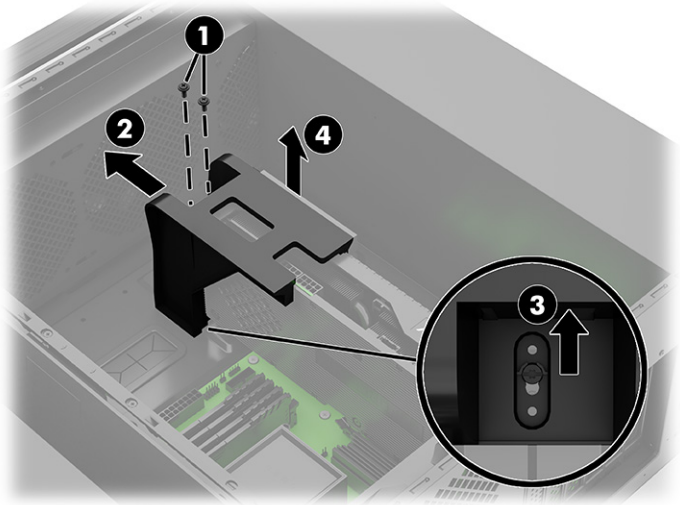

4. Disconnect the power cable from the graphics card **(1)**.
5. Remove the two Phillips screws that secure the graphics card to the computer **(2)**.
6. Press the release lever to release the card **(3)**, and then pull the card out of the slot **(4)**.

NOTE: Graphics card appearance might vary.

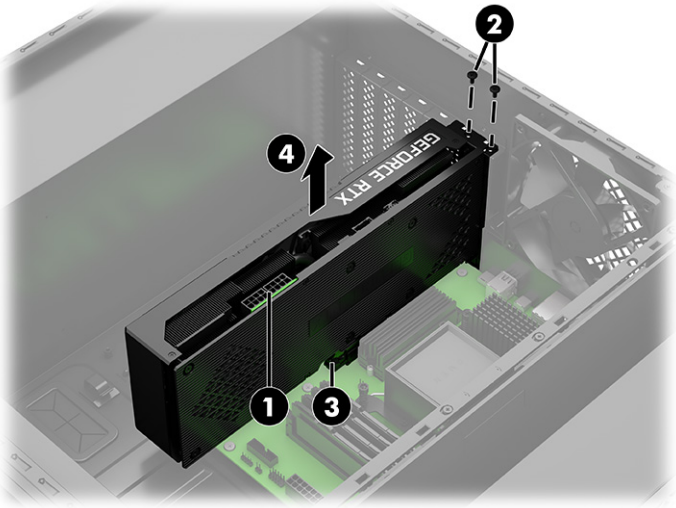

4. To install a graphics card:
    1. Position the computer with the system board facing upward.
    2. Insert the graphics card into the slot until it clicks into place **(1)**.
    3. Install the two Phillips screws **(2)**.
    4. Connect the power cable to the connector on the graphics card **(3)**.

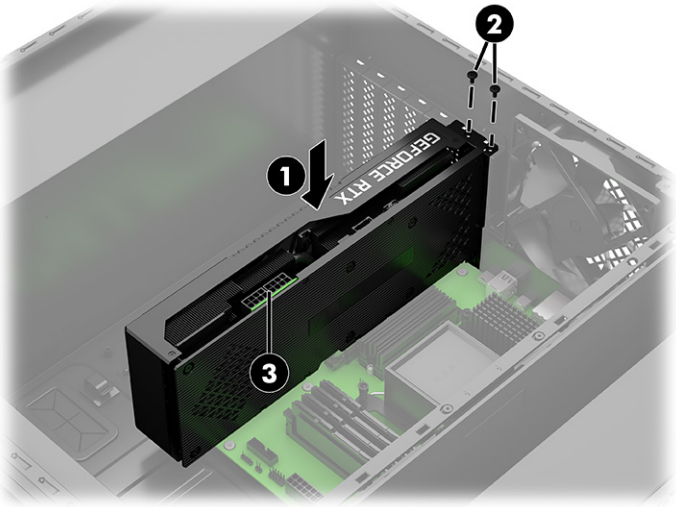

5. (Models with an average length graphics card) Slide the bracket onto the graphics card **(1)**, install the two Phillips screws into the base of the bracket **(2)**.

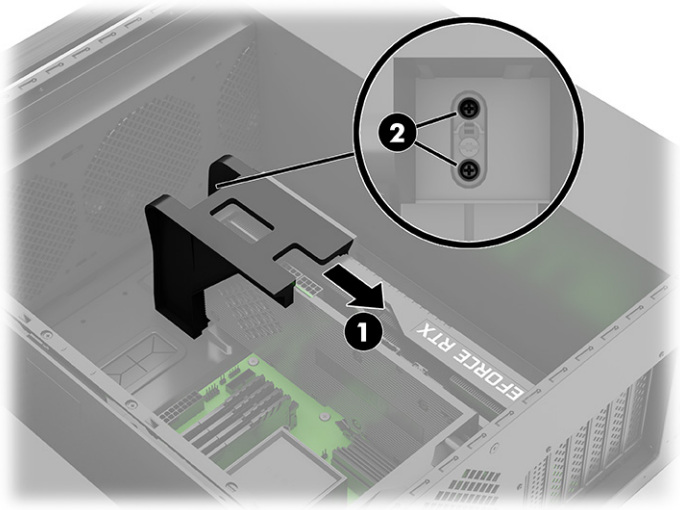

6. (Models with a long graphics card) Remove the right access panel (see Right access panel on page 22)

7. From the right side of the computer, hold the sliding bracket in place **(1)** while you install the retainer bracket on the opposite side. Position the retainer bracket onto the retention Torx screw on the bottom of the chassis **(2)**, and then slide the bracket about 3 mm (1/8 inch) so that the Torx screw moves to the smaller slot in the bottom of the bracket **(3)**. Slide the bracket onto the graphics card **(4)**, and then install the two Phillips screws **(5)** into the retainer bracket.

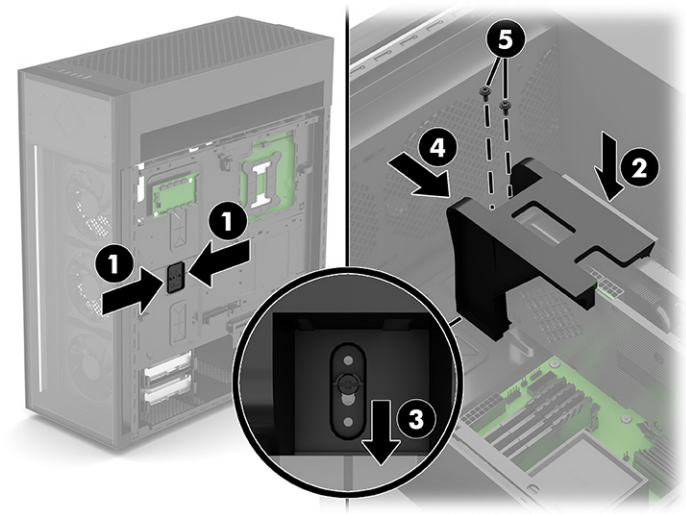

WLAN module

To remove and install the WLAN module, use these procedures and illustrations.

1. Prepare the computer for disassembly (see Preparation for disassembly on page 6).
2. Remove the glass access panel (see Glass access panel on page 8).

3. Position the computer with the system board facing upward.
4. Slide the graphics card bracket to allow access to the WLAN module (see Graphics card on page 14).
5. To remove the WLAN module:
    1. Remove the screw **(1)** that secures the module to the computer.
    2. Slide the antenna protector strip off the module **(2)**, and then use tweezers to gently disconnect the antenna cables by pulling them upward and away from the module **(3)**.
    3. Pull the module out of the socket **(4)**.

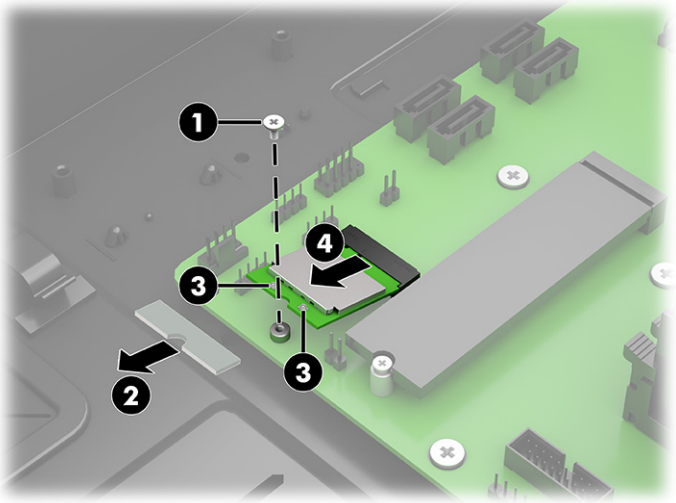

6. To install a WLAN module:
    1. Insert the WLAN module into the socket on the system board **(1)**.
    2. Use tweezers to gently connect the antenna cables to the module **(2)**, and then slide the protector strip over the antenna connectors **(3)**.

    NOTE: The WLAN antenna cable labeled 1/MAIN connects to the WLAN module Main terminal. The WLAN antenna cable labeled 2/AUX connects to the WLAN module Aux terminal.

3. Install the screw **(4)** to secure the module to the system board.

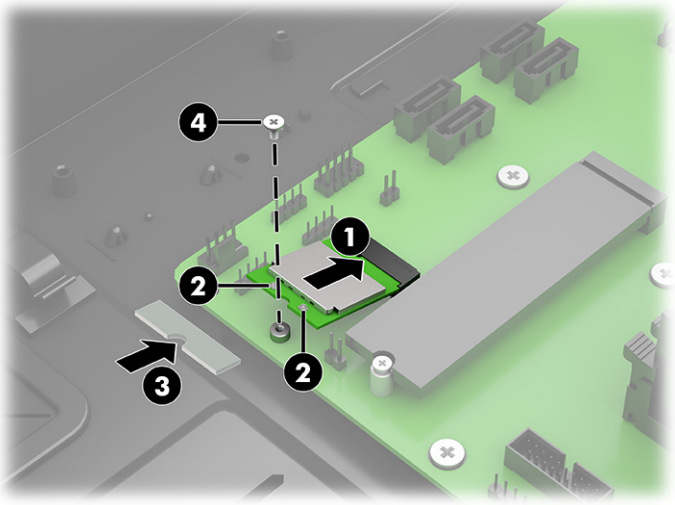

Front bezel

To remove and install the front bezel, use these procedures and illustrations.

1. Prepare the computer for disassembly (see Preparation for disassembly on page 6).
2. To remove the front bezel, press the two release buttons at the top of each side of the bezel **(1)**, and then rotate the top of the bezel away from the computer to remove it **(2)**.

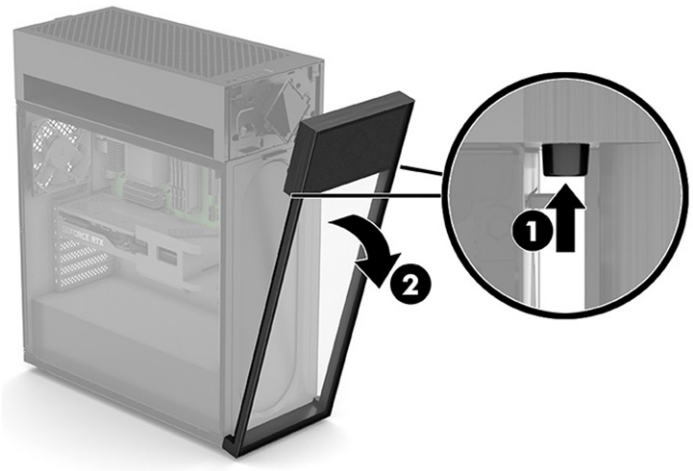

3. To install the front bezel, insert the two tabs at the bottom of the bezel into the slots at the bottom of the computer **(1)**, and then rotate the top of the bezel onto the computer until it clicks into place **(2)**.



Dust filter

To remove and install the dust filter, use these procedures and illustrations.

IMPORTANT: If your computer has a magnetic dust filter, be sure that the filter is installed. If the filter has been removed, install the filter before using the computer.

1. Prepare the computer for disassembly (see Preparation for disassembly on page 6).
2. Remove the front bezel (see Front bezel on page 19).

3. To remove the dust filter, press the release tab at the top of the filter **(1)**, and then rotate the top of the filter away from the computer to remove it **(2)**.

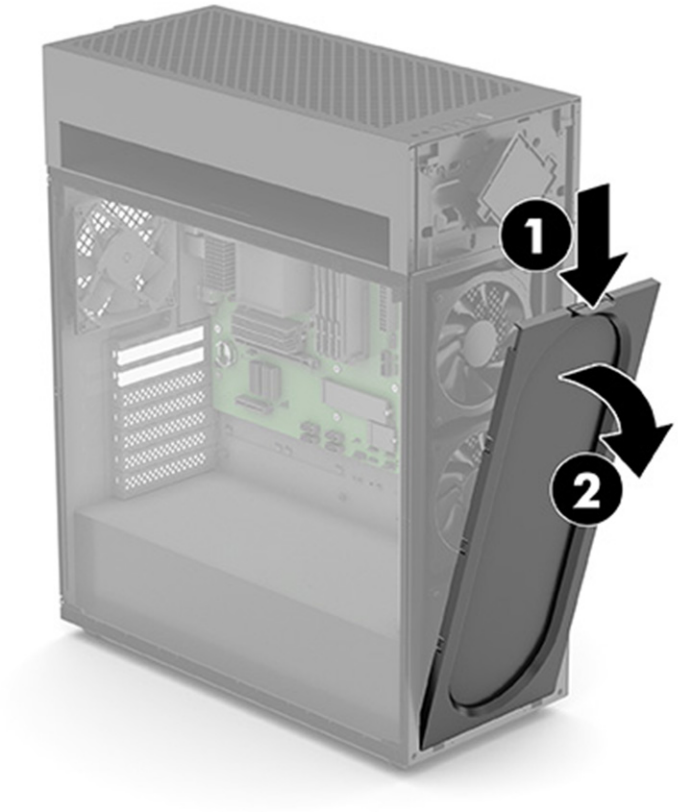

4. To install the dust filter, insert the two tabs at the bottom of the filter into the slots at the bottom of the computer **(1)**, and then rotate the top of the filter onto the computer until it clicks into place **(2)**.

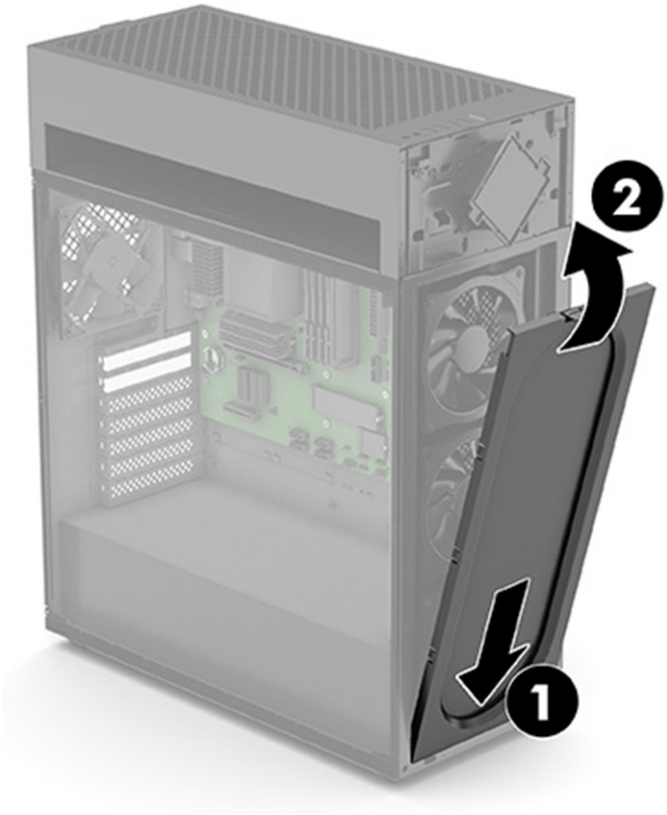

Right access panel

To remove and install the right access panel, use these procedures and illustrations.

1. Prepare the computer for disassembly (see Preparation for disassembly on page 6).
2. To remove the right panel:
    1. Press the release button **(1)**. The top of the panel rotates outward **(2)**.

2. Pull the panel up to remove it **(3)**.

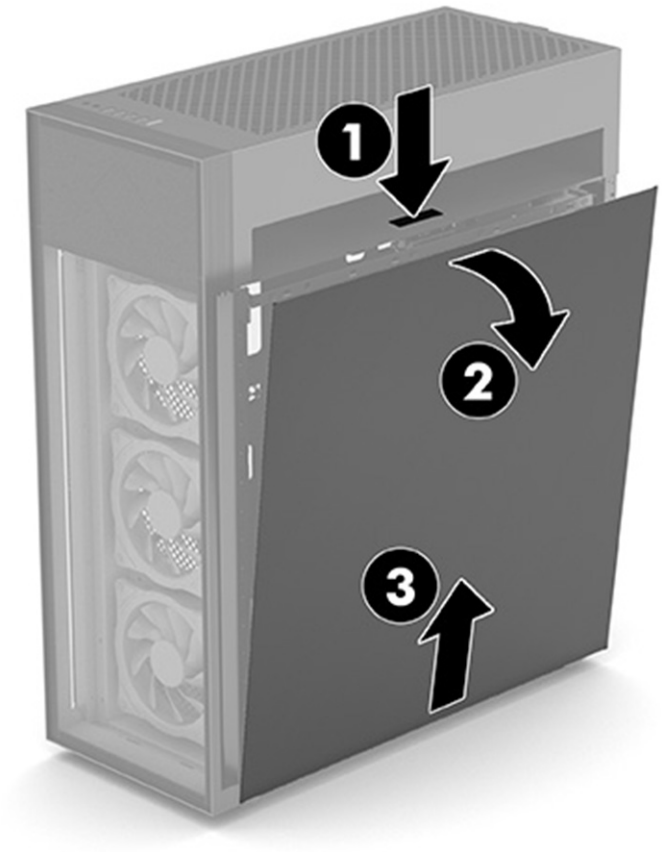

3. To install the right access panel:
    1. Insert the bottom of the panel into the groove in the bottom of the computer **(1)**.

2. Rotate the top of the panel until it clicks into place onto the computer **(2)**.



Hard drive

To remove and install the hard drive, use these procedures and illustrations.

1. Prepare the computer for disassembly (see Preparation for disassembly on page 6).
2. Remove the right side access panel (see Right access panel on page 22).
3. To remove a hard drive:
    1. Disconnect the power and data cables from the rear of the hard drive **(1)**.

2. Squeeze the hard drive holder tabs **(2)**, and then pull the hard drive assembly out of the hard drive bay **(3)**.

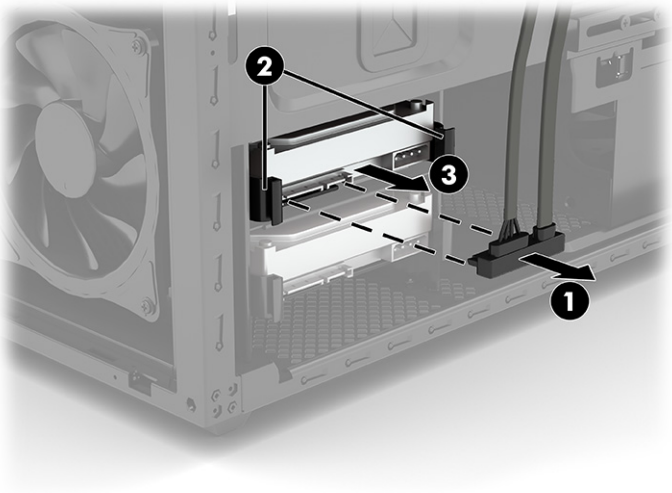

3. Flex the hard drive cover top and sides outward and away from the hard drive **(1)**, and then remove the hard drive from the cover **(2)**.

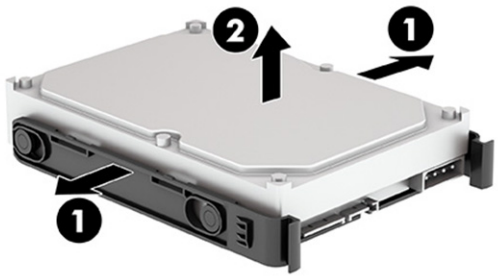

4. To install a hard drive:

   1. Flex the hard drive cover top and sides outward and away from the hard drive **(1)**, and then insert the hard drive into the cover **(2)**.

      NOTE: Be sure that the four posts **(3)** on the inside of the cover are inserted into the holes on the sides of the hard drive.

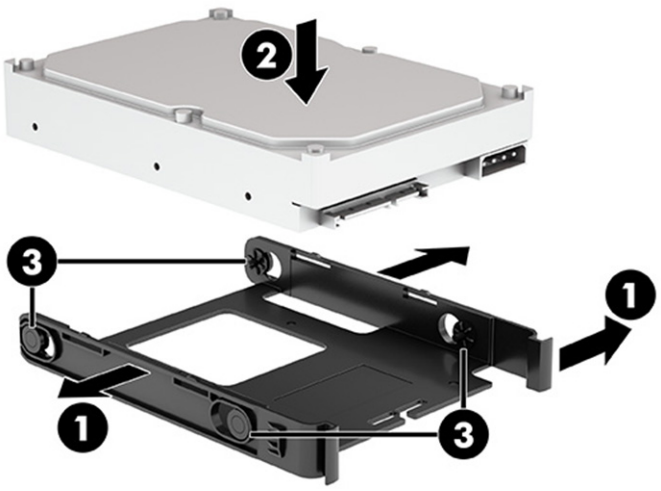

2. Insert the hard drive assembly into the drive bay until in clicks in to place **(1)**.
3. Connect the power and data cables into the rear of the hard drive **(2)**.

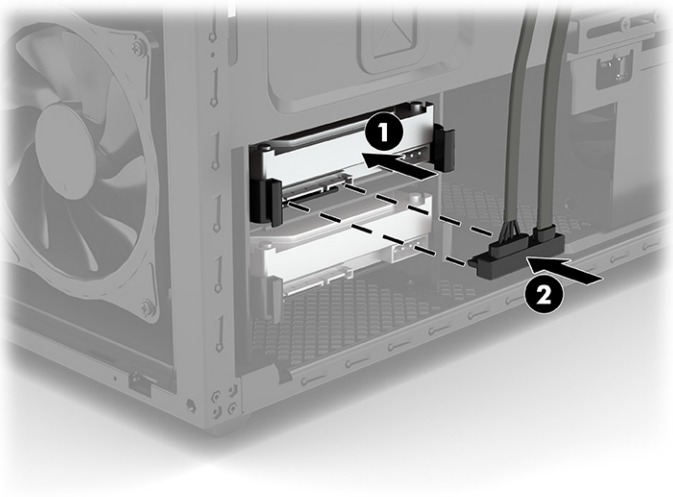

RGB logo module in 45L models

To remove and install the RGB logo module, use these procedures and illustrations.

1. Prepare the computer for disassembly (see Preparation for disassembly on page 6).
2. Remove the front bezel (see Front bezel on page 19).
3. Remove the dust filter (see Dust filter on page 20).
4. Remove the right side access panel (see Right access panel on page 22).
5. To remove the RGB logo module:

1. Remove the top cover by lifting it straight up and off the computer.

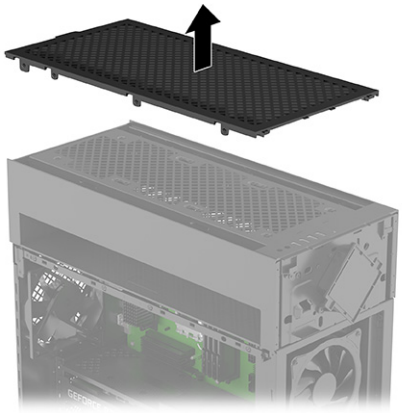

2. Remove the top I/O bezel by removing the two Phillips screws **(1)**, and then lifting the top I/O bezel off the computer **(2)**.

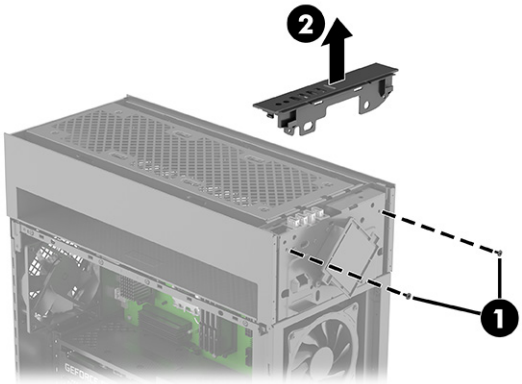

3. Remove the two Phillips screws that secure the RGB module to the computer **(1)**.
4. Rotate the top of the module downward **(2)**.
5. Disconnect the cable from the RGB board **(3)**.

6. Pull the cable through the hole in the computer chassis **(4)**, and then remove the module and cable **(5)**.

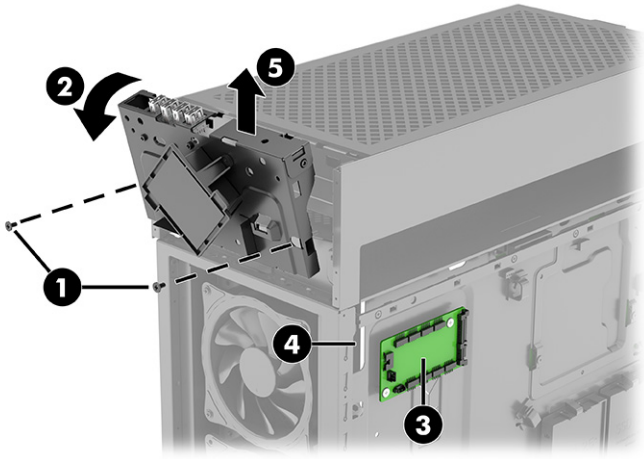

7. Remove the two screws that secure the module to the bracket **(1)**, and then lift the module off the bracket and pull the cable through the hole in the bracket **(2)**.

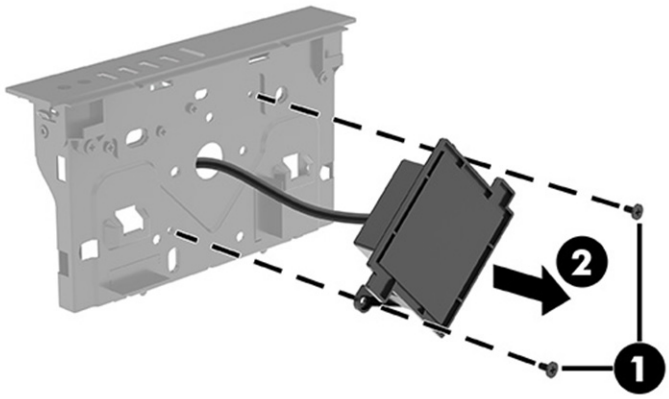

6. To install the RGB logo module:

1. Route the cable for the logo module through the hole in the bracket **(1)**. Position the module on the front of the bracket **(2)**, and then install the two Phillips screws **(3)** that secure the module to the bracket.

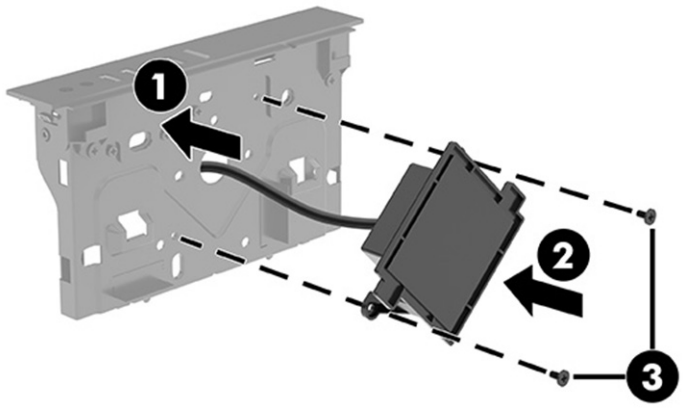

2. Position the module on the front of the computer with the top rotated outward **(1)**.
3. Route the cable through the hole in the computer chassis to the RGB board **(2)**.
4. Connect the cable to the RGB board **(3)**. For RGB board connector designations, see RGB board on page 31.
5. Rotate the top of the module upward and into place on the computer **(4)**.
6. Install the two Phillips screws **(5)** that secure the module.

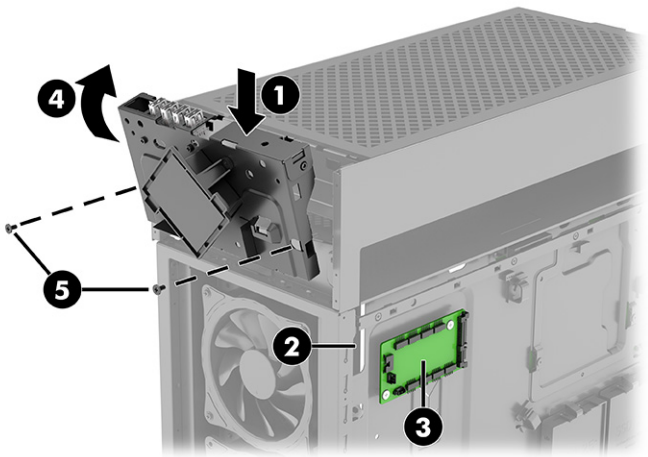

7. Install the top I/O bezel by positioning it on the top-front of the computer **(1)**, and then installing the two Phillips screws **(2)**.

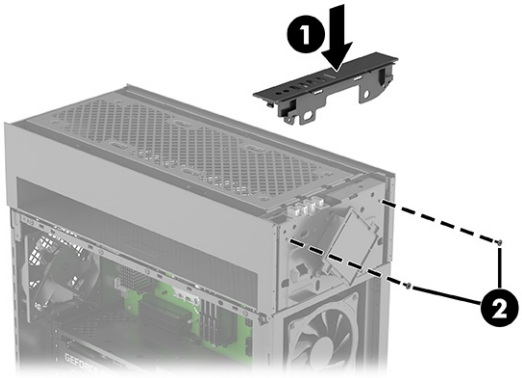

8. Install the top cover pressing it down on the top of the computer until it snaps into place.

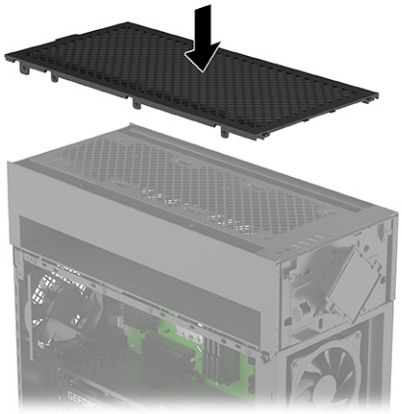

RGB logo module in 40L models

To remove and install the RGB logo module, use these procedures and illustrations.

1. Prepare the computer for disassembly (see Preparation for disassembly on page 6).
2. Remove the front bezel (see Front bezel on page 19).

3. Remove the two Phillips screws that secure the module to the computer **(1)**. Lift the module out enough to access the connector on top **(2)**, and then disconnect the cable from the top of the module **(3)**.

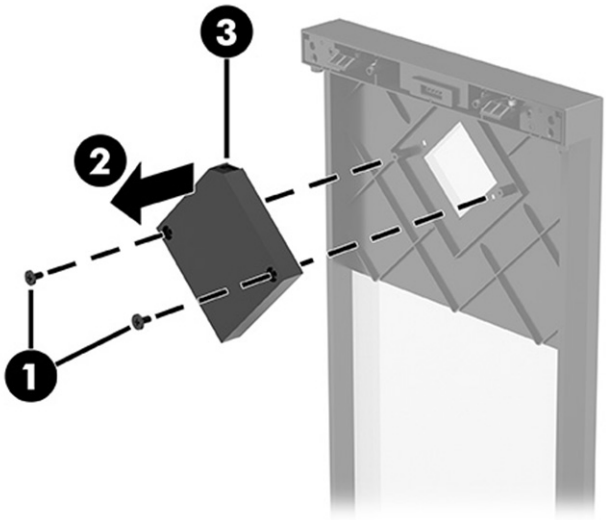

4. Connect the cable to the top of the module **(1)**. Position the module on the inside-top of the bezel **(2)**, and then install the two Phillips screws **(3)** that secure the module.

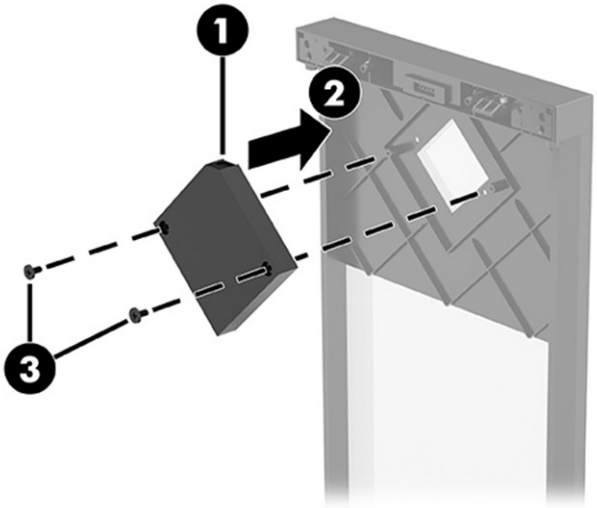

RGB board

To remove and install the RGB board, use these procedures and illustrations.

1. Prepare the computer for disassembly (see Preparation for disassembly on page 6).
2. Remove the right access panel (see Right access panel on page 22).
3. To remove the RGB board:
    1. Position the computer with the RGB board facing upward.

2. Disconnect the cables from the RGB board **(1)**.
3. Remove the two Phillips screws from the board **(2)**.
4. Remove the board from the computer **(3)**.

NOTE: Connector appearance can vary.

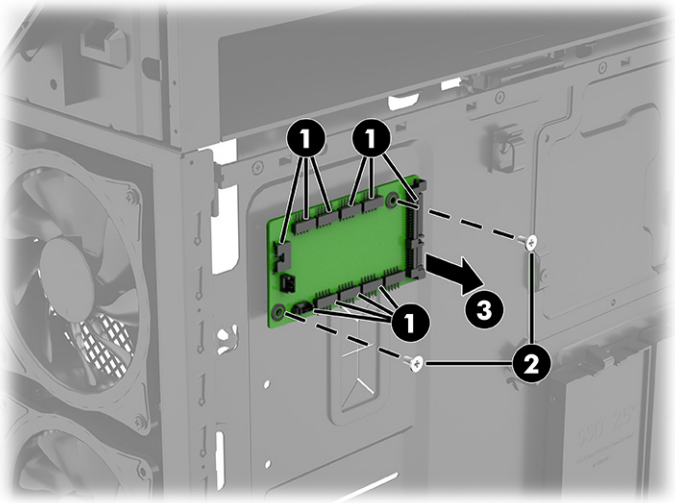

4. To install the RGB board:
   1. Position the board in the computer **(1)**.
   2. Install the two screws that secure the board to the computer **(2)**.
   3. Connect the cables to RGB board **(3)**.

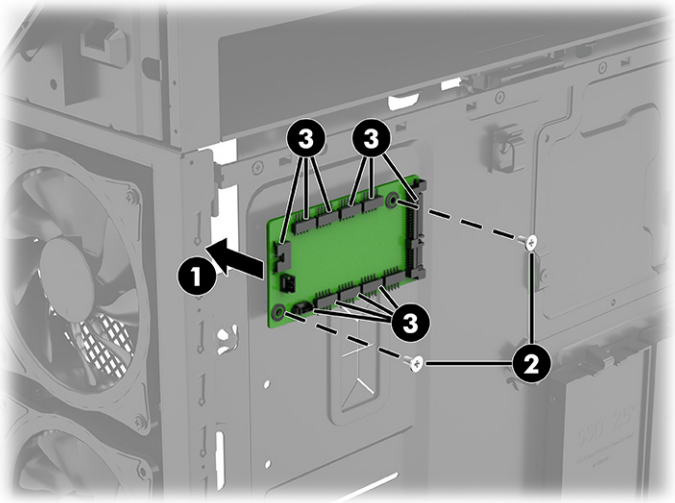

The following illustration and table defines the connectors on the RGB board:

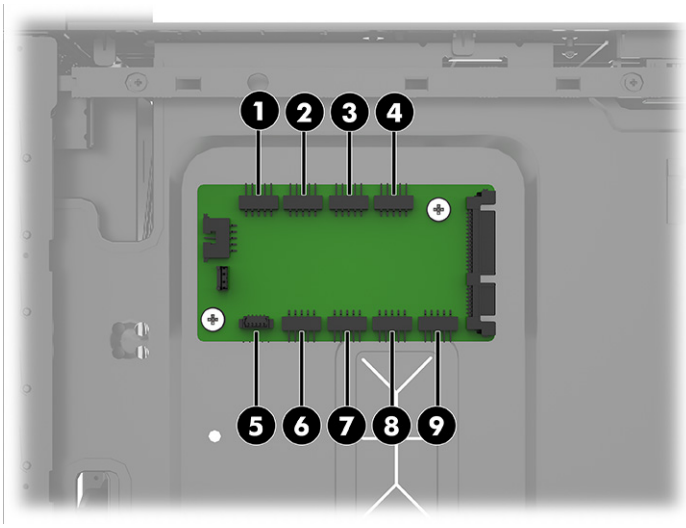

Table 2-1 RGB board connectors

Connector	
1. RGB CPU air or liquid cooler (12 V)	6. RGB chassis light bar (12 V)
2. ARGB front fan 1 (5 V)	7. RGB front fan 1 (12 V)
3. ARGB front fan 2 (5 V)	8. RGB front fan 2 (12 V)
4. ARGB front fan 3 (5 V)	9. RGB front fan 3 (12 V)
5. RGB logo (5 V)	

NOTE:

- A small triangle on the plug of each RGB/ARGB component identifies pin 1. A bracket mark on the RGB header 12 V pin indicates pin 1. The ARGB header is marked with 5V next to pin 1.
- HP provides addressable lighting effects such as spiral for Addressable RGB (ARGB) front fan models. To be sure the addressable lighting effects are synchronized to preinstalled ARGB front fans, use only HP or Cooler Master ARGB fans when you upgrade.
- The OMEN Gaming Hub is upgradeable and compatible with system boards with standard USB pin headers. You can control up to seven zones using the OMEN Gaming Hub. The three RGB headers are in the same zone. Each ARGB header is its own zone.

Table 2-2 RGB front fan

Factory configurable options	RGB board pin header	OMEN gaming hub lighting zone
OMEN logo	LOGO	Chassis/1
Chassis internal light strip	Light bar	Chassis/2
CPU cooler	CPU RGB	CUSTOM RGB/1
Bottom front fan	FFAN RGB (left)	CUSTOM RGB/2
Middle front fan	FFAN RGB (middle)	CUSTOM RGB/2
Top front fan	FFAN RGB (right)	CUSTOM RGB/2

Table 2-3 **ARGB front fan**

Factory configurable options	RGB board pin header	OMEN gaming hub lighting zone
OMEN logo	LOGO	Chassis/1
Chassis internal light strip	Light bar	Chassis/2
CPU cooler	CPU RGB	CUSTOM RGB/1
Bottom front fan	FFAN ARGB1	CUSTOM ARGB/1
Middle front fan	FFAN ARGB2	CUSTOM ARGB/2
Top front fan	FFAN ARGB3	CUSTOM ARGB/3

Front RGB fans

To remove the front RGB fans, use these procedures and illustrations.

1. Prepare the computer for disassembly (see Preparation for disassembly on page 6).
2. Remove the glass access panel (see Glass access panel on page 8).
3. Remove the right side access panel (see Right access panel on page 22).
4. Remove the front bezel (see Front bezel on page 19).
5. Remove the dust filter (see Dust filter on page 20).
6. To remove the front bottom RGB fan:
    1. Disconnect the cable from the RGB board on the right side of the computer **(1)**.
    2. Pull the cable through the hole where it routes to the fan on the front of the computer (under the front bezel) **(2)**.
    3. Disconnect the fan power cable from the system board **(3)** (under the glass access panel).
    4. Pull the power cable through the two holes in the computer **(4)**. The power cable routes from the fan (under the front bezel), to the right side, and then to the system board (under the glass access panel).
    5. Remove the four screws from the outside-front (under the front bezel) that secure the fan to the front of the computer **(5)**.

6. Remove the fan from the computer **(6)**.

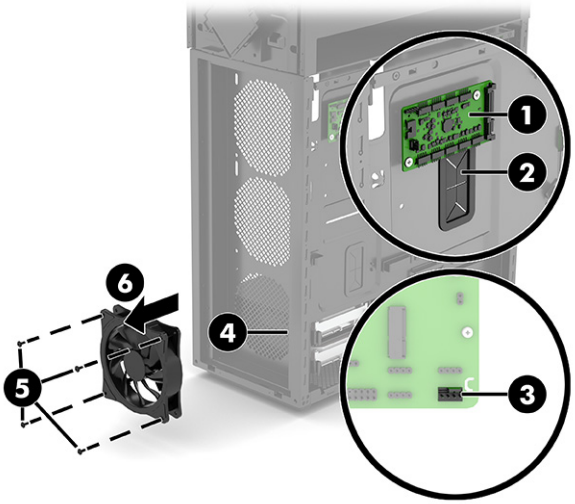

7. To remove the front middle and top RGB fan:

NOTE: The procedure to remove the middle and top fans is the same. The fans connect to different connectors on the RGB board.

1. Disconnect the cable from the RGB board on the right side of the computer **(1)**.
2. Pull the cable through the hole where it routes to the fan on the front of the computer (under the front bezel) **(2)**.
3. Disconnect the fan power cable from the system board **(3)** (under the glass access panel).
4. Pull the power cable through the two holes in the computer **(4)**. The power cable routes from the fan (under the front bezel), to the right side, and then to the system board (under the glass access panel).
5. From the inside-front of the computer, remove the four screws that secure the fan to the front of the computer **(5)**.

6. Remove the fan from the computer **(6)**.

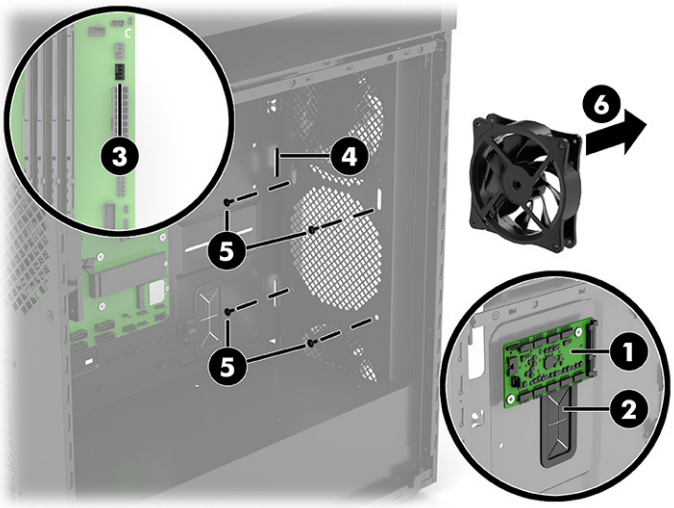

8. To install the front bottom RGB fan:
   1. Position the fan on the bottom of the computer **(1)** (under the front bezel).
   2. Install the four screws from the outside-front that secure the fan to the front of the computer **(2)**.
   3. Route the power cable through the hole to the right side of the computer and then through the hole to the system board side (under the glass access panel) **(3)**.
   4. Connect the fan power cable to the system board **(4)**.
   5. Route the RGB cable through the hole to right side of the computer **(5)**.
   6. Connect the cable to the RGB board **(6)**. For RGB board connector designations, see RGB board on page 31.

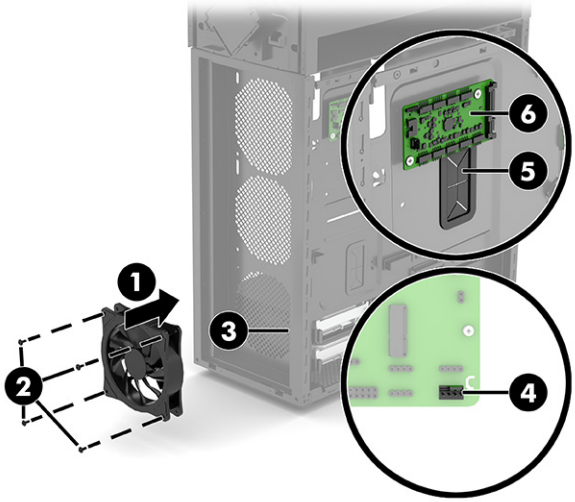

9. To install the middle and top RGB fans:
   1. Position the fan on the middle of the computer **(1)** (under the front bezel).

2. From the inside-front of the computer, install the four screws that secure the fan to the front of the computer **(2)**.
3. Route the power cable through the hole to the right side of the computer and then through the hole to the system board side (under the glass access panel) **(3)**.
4. Connect the fan power cable to the system board **(4)**.
5. Route the RGB cable through the hole to right side of the computer **(5)**.
6. Connect the cable to the RGB board **(6)**. For RGB board connector designations, see RGB board on page 31.

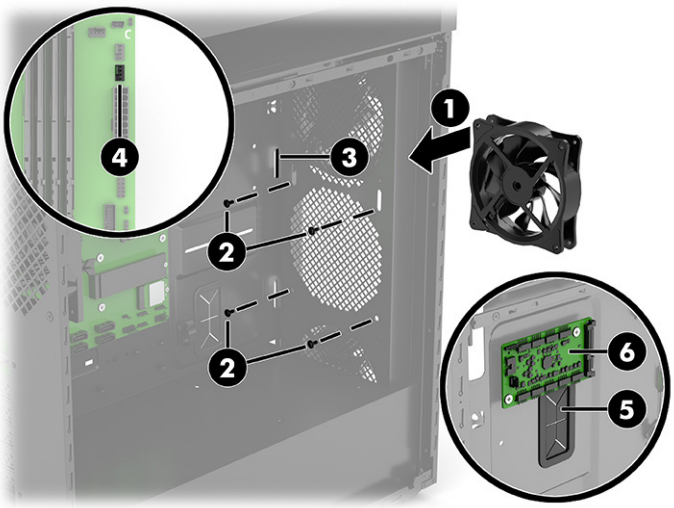

Internal light bar

To remove and install the internal light bar, use these procedures and illustrations.

1. Prepare the computer for disassembly (see Preparation for disassembly on page 6).
2. Remove the glass access panel (see Glass access panel on page 8).
3. Remove the right side access panel (see Right access panel on page 22).
4. To remove the internal light bar:

1. (40L models only) You must remove the liquid cooler fan to access the light bar screw. To remove the liquid cooler fan, remove the four Phillips screws **(1)** from the outside-rear of the computer, and then remove the fan from the inside of the computer **(2)**.

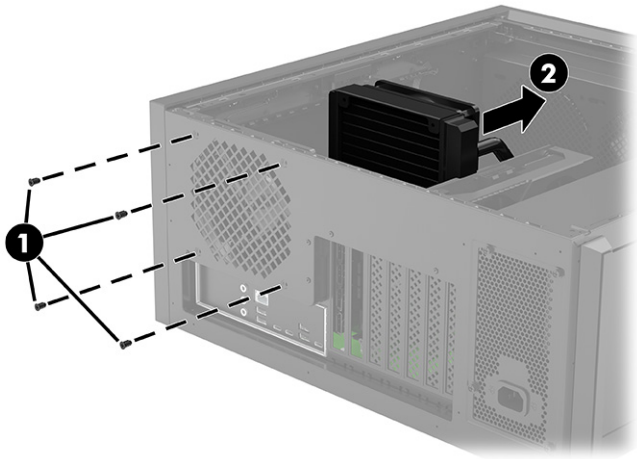

2. Position the computer with the RGB board facing upward (under the right side access panel).
3. Disconnect the cable from the RGB board **(1)**.
4. Pull the cable through the hole to the system board side (under the glass access panel) of the computer **(2)**.
5. Position the computer with the system board facing upward.
6. Remove the Phillips screw from the light bar **(3)**, and then remove the bar and cable from the computer **(4)**.

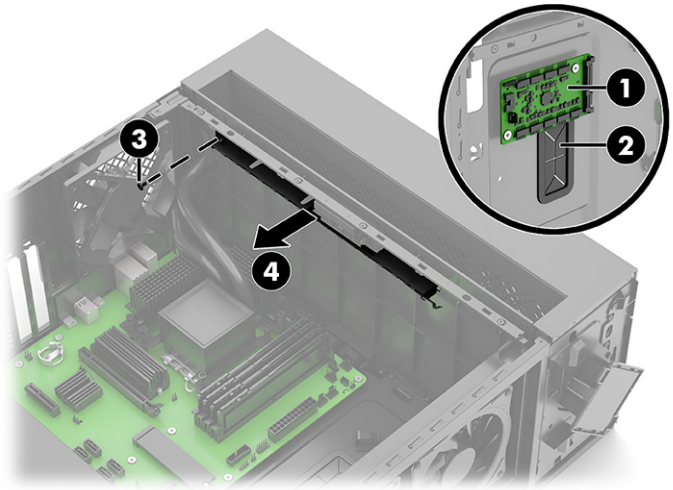

5. To install the internal light bar:
    1. Position the computer with the system board facing upward (under the glass access panel).
    2. Position the light bar on the inside-top of the computer **(1)**, and then install the Phillips screw into the light bar **(2)**.

3. Route the cable through the hole to the right side of the computer **(3)**.
4. Position the computer with the RGB board facing upward (under the right side access panel).
5. Connect the cable to the RGB board **(4)**. For RGB board connector designations, see RGB board on page 31.

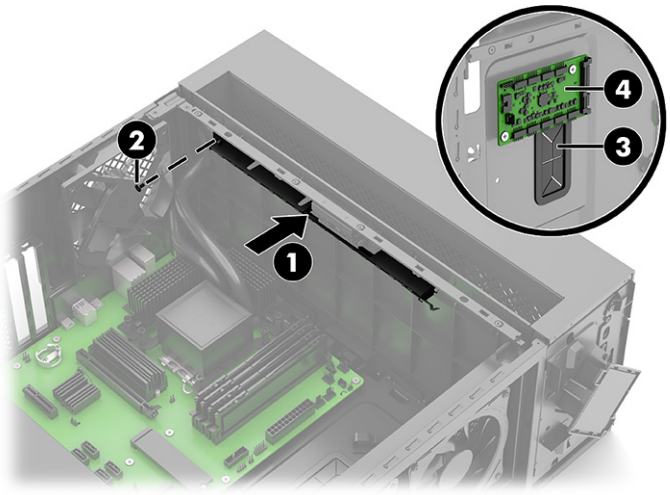

6. (40 L models only) Position the liquid cooling fan in the inside of the computer **(1)**, and then install the four Phillips screws **(2)**.

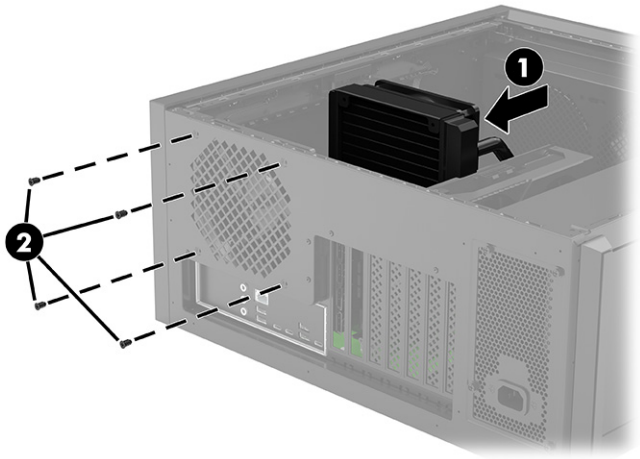

Power supply

To remove and install the power supply, use these procedures and illustrations.

1. Prepare the computer for disassembly (see Preparation for disassembly on page 6).
2. Remove the glass access panel (see Glass access panel on page 8).
3. Remove the right side access panel (see Right access panel on page 22).

4. To remove the power supply:
    1. Position the computer with the system board facing upward (under the glass access panel).
    2. Disconnect the 24-pin power supply cable from the system board **(1)**.
    3. Disconnect the two 4-pin power supply cables from the system board **(2)**.
    4. Disconnect the power supply cable from the graphics card **(3)**.

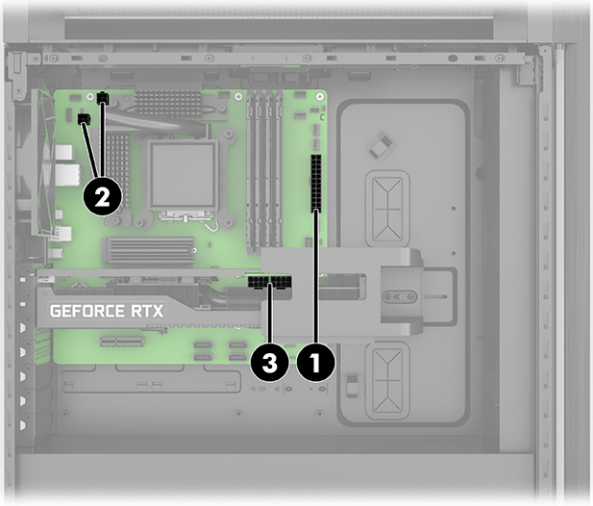

    5. Position the computer with the RGB board facing upward (under the right side access panel).
    6. Disconnect the power supply cable from the RGB board **(1)**.
    7. Disconnect the power supply cables from any installed hard drives **(2)** (select products only).
    8. Pull the disconnected cables through the holes in the computer **(3)** that lead to the system board.

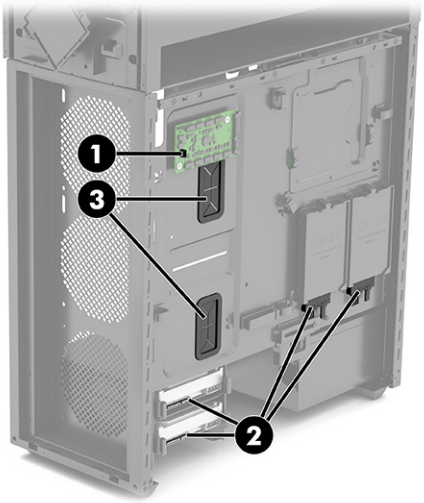

    9. Remove the two Phillips screws from the power supply bracket **(1)**, and then remove the bracket from the computer **(2)**.
    10. Remove the four Phillips screws from the outside-rear of the computer **(3)**.

11. Slide the power supply up, and then out of the computer **(4)**.

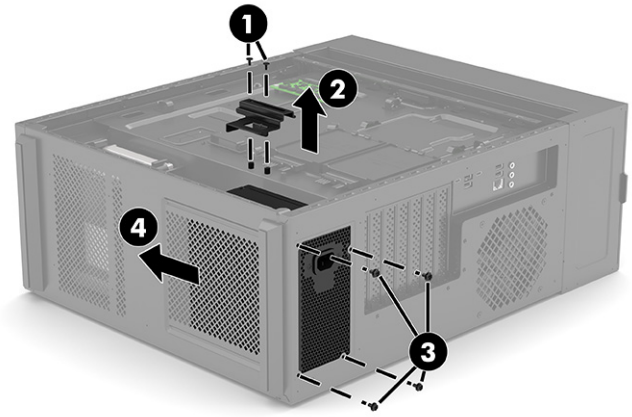

5. To install the power supply:
    1. Slide the power supply into the bottom of the computer **(1)**.
    2. Install the four Phillips screws that secure the power supply to the computer **(2)**.
    3. Position the bracket over the side of the power supply **(3)**, and then install the two Phillips screws **(4)**.

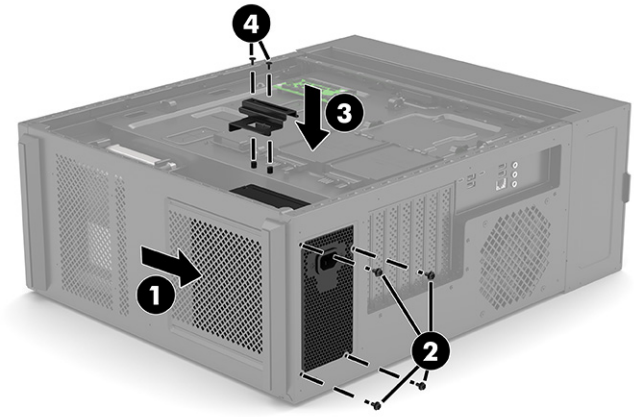

    4. Position the computer with the RGB board facing upward (under the right side access panel).
    5. Push the cables through the holes in the computer **(1)** that lead to the system board (under the glass access panel).
    6. Connect the power supply cable to the RGB board **(2)**.

7. Connect the power supply cables to any installed hard drives **(3)** (select products only).

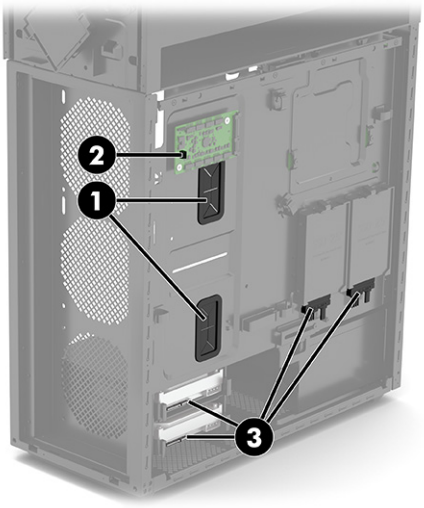

8. Position the computer with the system board facing upward (under the glass access panel).
9. Connect the 24-pin power supply cable to the system board **(1)**.
10. Connect the two 4-pin power supply cables to the system board **(2)**.
11. Connect the power supply cable to the graphics card **(3)**.

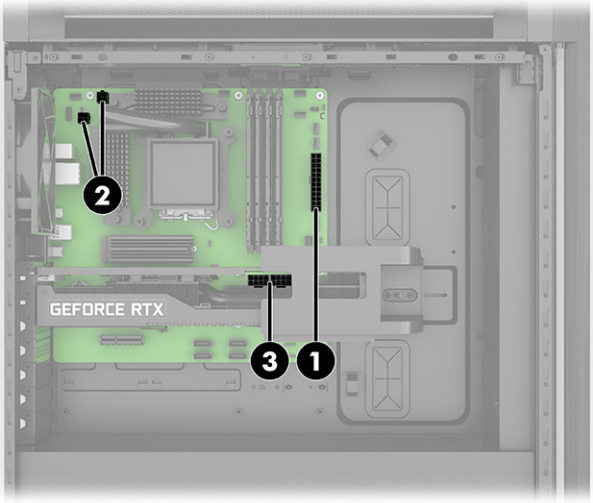

Upgrade options

This chapter provides you with information about upgrade options for your computer.

Fan and liquid cooling upgrade locations

Use this information to determine installation locations for fan and liquid cooling upgrades.

Fan and liquid cooling upgrade locations

Use this information to determine installation locations for the dual 120 mm fan upgrade.

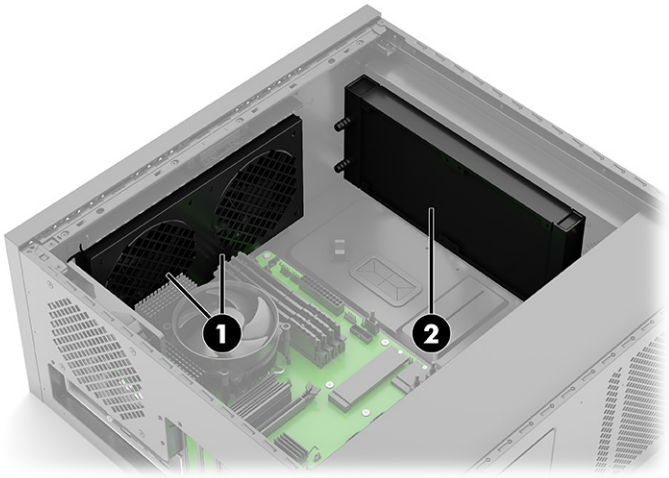

(1) Dual 120 mm fans

(2) 240 mm liquid cooler

Cryo chamber (45L models only)

You can install a 120 mm × 360 mm liquid cooler in the cryo chamber.

Note that this is not an option that can be configured at the factory at the initial launch of 45L models.

The 120 mm × 360 mm liquid cooler is installed in the location shown in the following illustration.

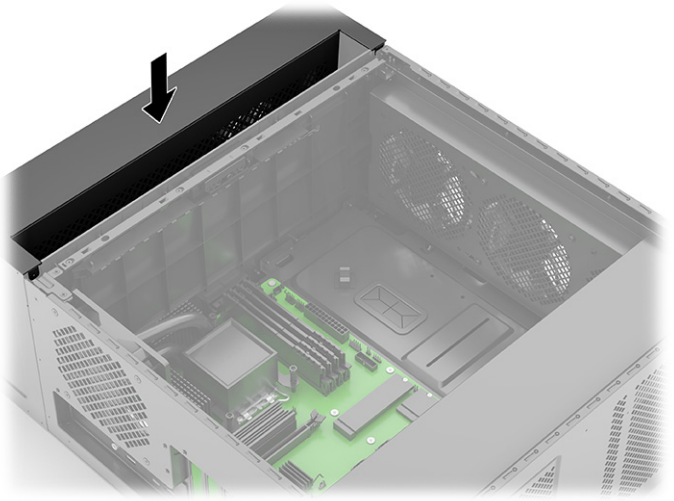

Please note the following considerations when upgrading to this cooling solution:

- To access the screw holes that secure the cooler to the chassis, remove the top cover by lifting it straight up and off the computer. There are up to eight available screw holes to use to secure the cooler.
- You must remove the radiator mounting using the following steps:

1. Remove the front bezel by pressing the two release buttons at the top of each side of the bezel **(1)**, and then rotate the top of the bezel away from the computer to remove it **(2)**.

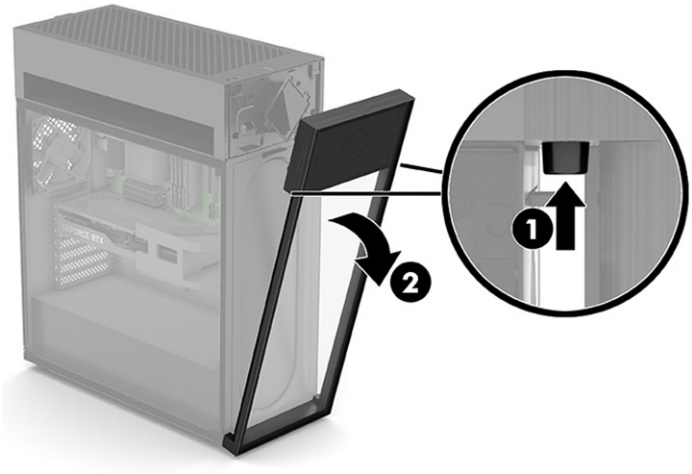

2. Remove the top cover by lifting it straight up and off the computer.

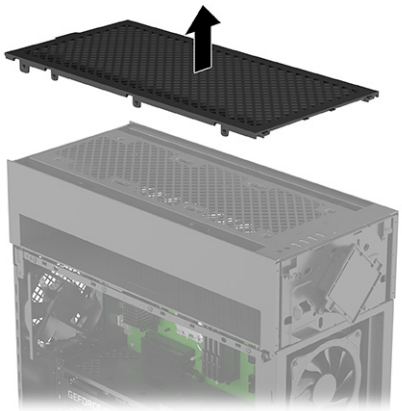

3. Remove the top I/O bezel by removing the two Phillips screws **(1)**, and then lifting the top I/O bezel off the computer **(2)**.

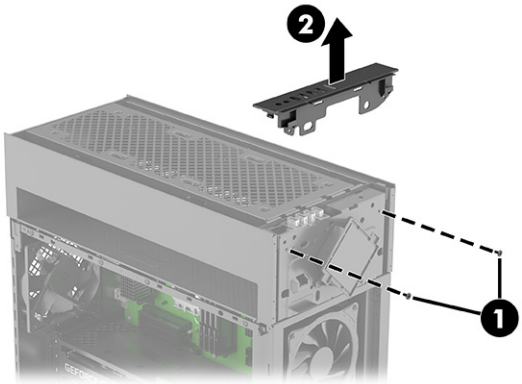

4. Remove the cryo chamber housing by removing the six Phillips screws **(1)**, and then pulling the housing up and off the computer **(2)**.

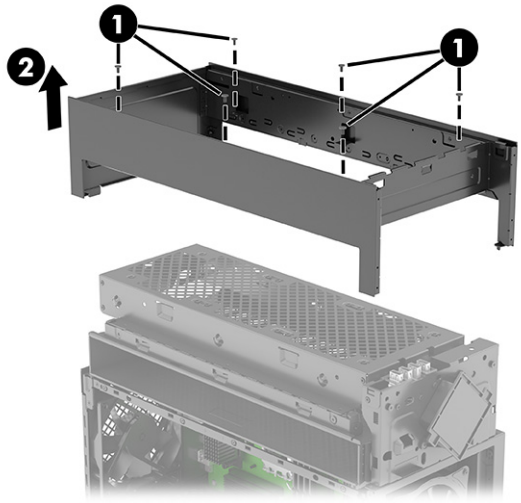

5. Remove the two Phillips screws that secure the RGB module to the computer **(1)**, and rotate the top of the RGB module forward **(2)**.

NOTE: In this step you only need to remove the screws and rotate the module (steps 1 and 2 in the illustration).

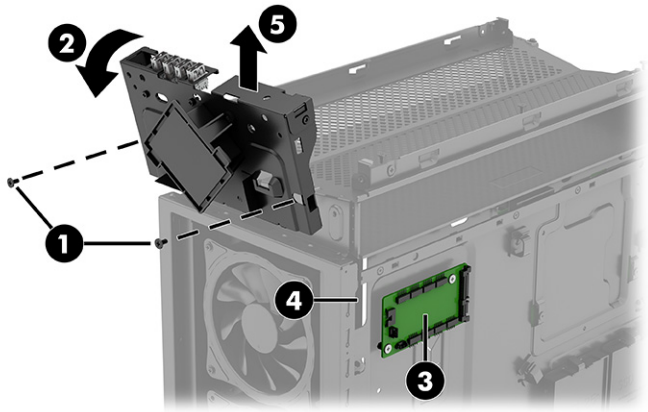

6. Remove two screws **(1)** and lift the bracket off the computer **(2)**.

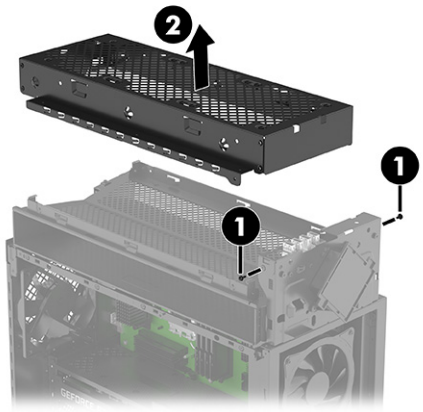

- Liquid cooler tube length can be predefined, or it might be customizable to fit the distance between the processor and the radiator/fan mounting location.
- The mounting pitch differs on computers with Intel versus AMD processors.
- You must remove a bracket with three screws from the left side of the chassis near the fan so you can route the tubes, fan power and RGB cables from the cryo chamber to the main chamber. Maximum tube diameter is 14 mm. For tubes with a diameter between 14 - 17 mm, confirm that the tubes can be squeezed down to 14 mm so they fit into the Cryo chamber tunnel during installation.

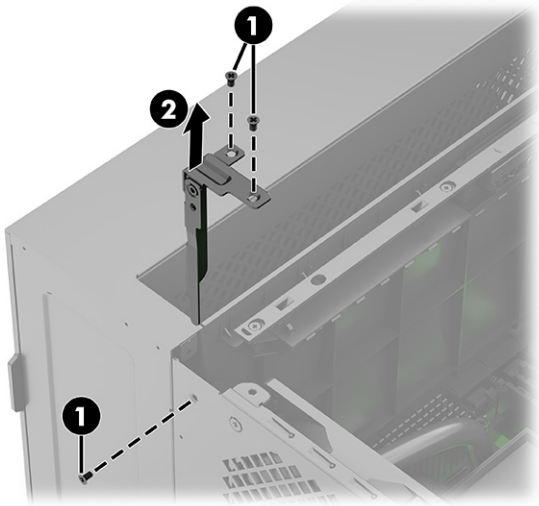

- Depending on your configuration, you might need a fan power bridge or RGB Y cable if you determine you need more fan power headers or RGB lighting pin headers. A standard 120 mm × 360 mm liquid cooler with lighting comes with three fans, each of which has one power cable and one lighting cable.

Front 240 mm fan or radiator

You can install a 120 mm × 120 mm or a 120 mm × 240 mm fan or radiator on the front of the chassis.

Note that this is not an option that can be configured at the factory.

A 240 mm fan or radiator is installed in the location shown in the following illustration.

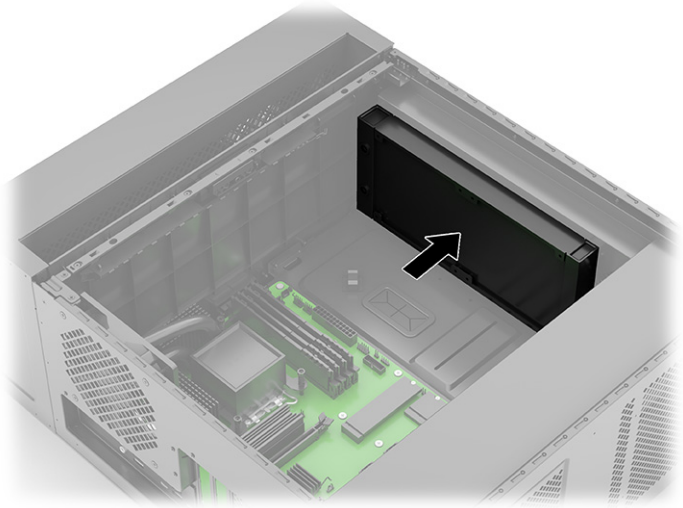

Please note the following considerations when upgrading to this cooling solution:

- Radiator fan mounting holes are shared with the top and middle front fan.
- Be sure that there is no conflicting air flow from the front fans.
- The mounting pitch differs on computers with Intel versus AMD processors.
- Depending on your configuration, you might need a fan power bridge or RGB Y cable if you determine you need more fan power headers or RGB lighting pin headers.

Using non-HP ATX system boards

Make note of these considerations if you use a non-HP ATX system board.

Use the following illustration to determine mounting holes in ATX system boards.

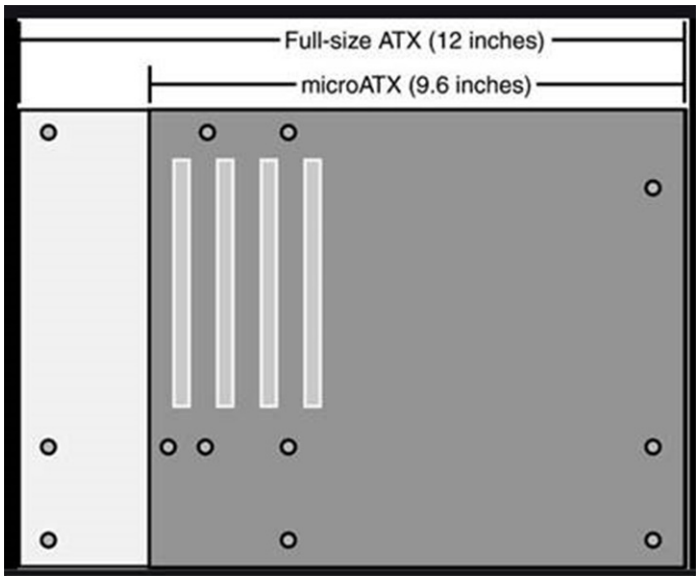

Please note the following considerations when using an ATX system board:

- See Stand-alone chassis configuration on page 48 for information about top I/O and rear fan cable routing.

- Route the cable connected to the CN2 header on the RGB board to a 5 × 2 USB 2.0 pin header or 9-pin USB 2.0 pin header on the new system board.
- Route the cable connected to the PWR_LED header on the RGB board to a 2 × 1 power LED pin header on the new system board.
- Install the OMEN gaming hub from the Microsoft app store for lighting control.
- See RGB board on page 31 for RGB and ARGB lighting connections and lighting zone settings for the OMEN gaming hub.

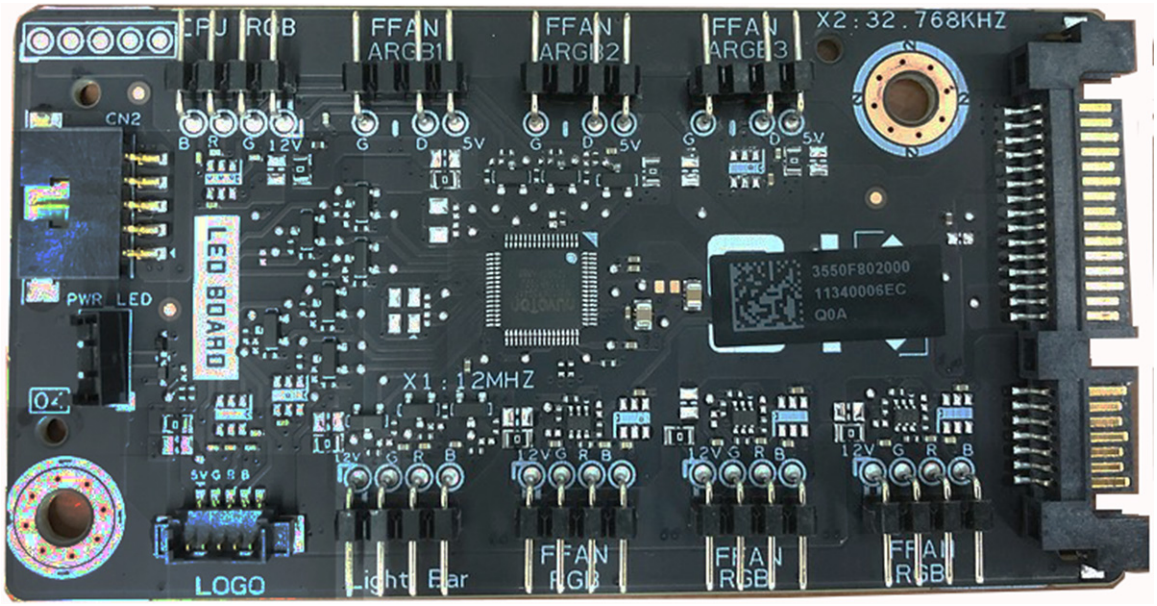

Stand-alone chassis configuration

This chapter provides you with information about configuring the stand-alone chassis.

Top I/O cabling

To properly configure the cabling to the top I/O, use these procedures and illustrations.

1. Note the top I/O connectors and their associated cables:

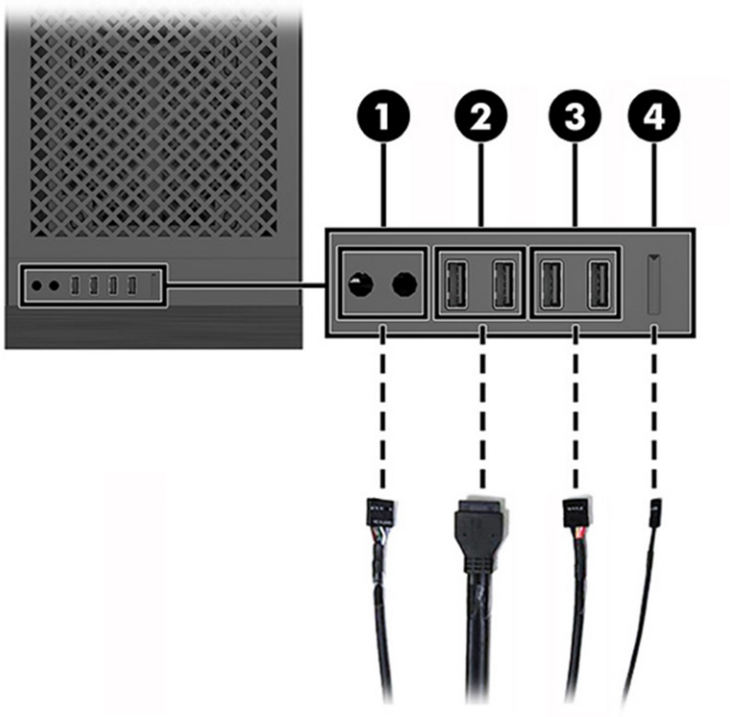

Table 2-4 Identifying the top I/O cables

Top I/O cables	
1	Audio
2	USB 3.2 Gen 1*
3	5 × 2 or 9-pin USB 2.0
4	Power switch
*Actual USB port bandwidth depends on the system board specification.	

2. When plugging the cables into the system board, be sure to connect the cables to the correct connectors on the system board, as shown in the following illustration.

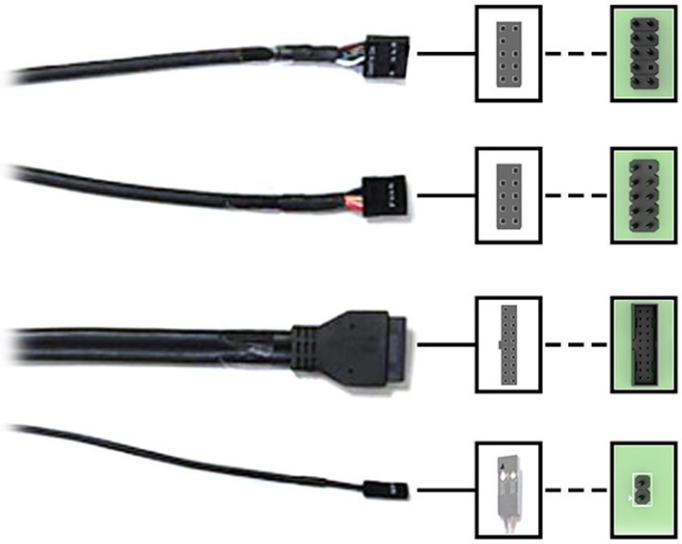

NOTE: Match the triangle mark on the power switch cable plug with the positive pin on the system board connector.

Except for the power switch, each system board connector has an empty pin. When connecting the cable, be sure to orient the cable plug with the empty pin on the system board connector.

Lighting board cabling

To properly configure the cabling to the lighting board, use these procedures and illustrations.

1. Cables **(1)** and **(3)** are preinstalled on the lighting board. Connect the other ends **(2)** and **(4)** to USB 2.0 and power LED connectors on the system board, respectively.

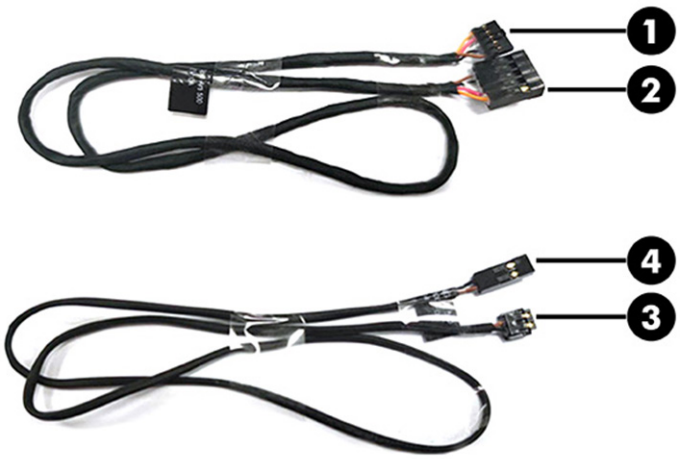

2. When plugging the cables into the system board, be sure to connect the cables to one of the 9-pin USB 2.0 connectors and the 2-pin POWER LED connector. The 9-pin connector has an empty pin. When

connecting the cable, be sure to orient the cable plug with the empty pin on the system board connector. Match the triangle mark on cable plug **(4)** with the positive pin on the system board connector.

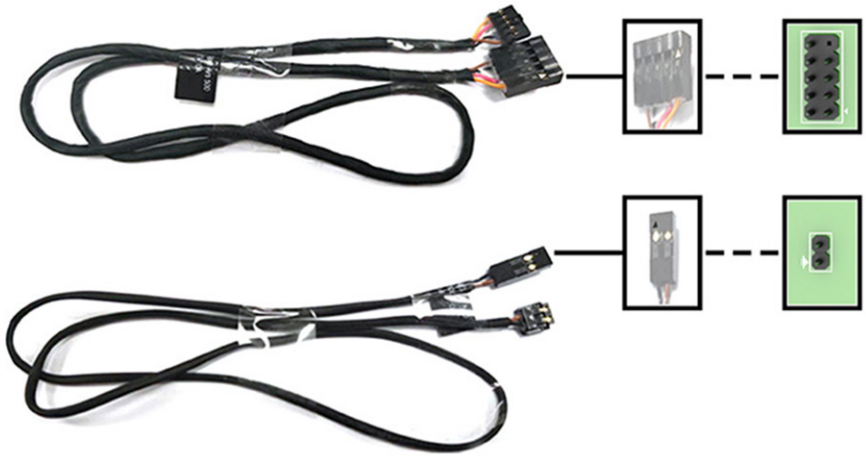

3. Plug the cable from the power supply into the SATA connector on the lighting board.

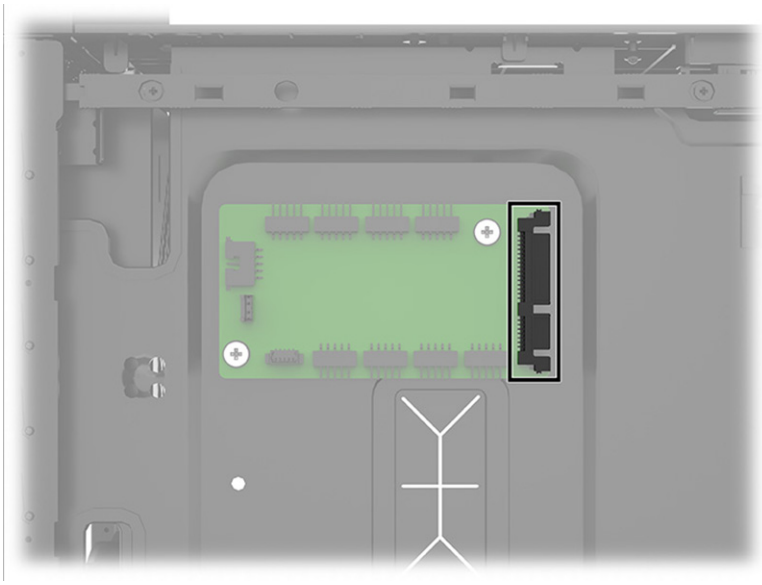

4. When connecting a power supply SATA cable to the lighting board, note the proper installation location on the board **(1)** for the cable **(2)**.

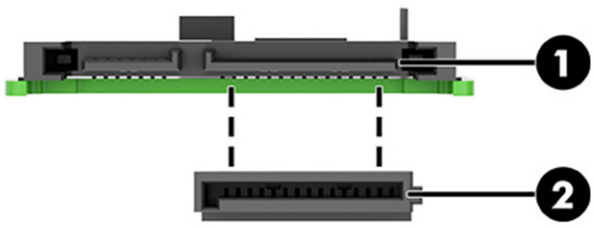

5. Install the OMEN gaming hub from the Microsoft app store to control lighting on the internal light strip and OMEN logo. See RGB board on page 31 for information about extended RGB and ARGB lighting connections to third party lighting components and lighting zone settings in the OMEN gaming hub. HP recommends that ARGB lighting components are all the same brand and installed in the same orientation in all three front fan locations to avoid a mismatched lighting effect.

Rear fan cabling

To connect the cable to the rear fan, use this procedure and illustration.

- Connect the rear fan cable **(1)** to the 4-pin connector on the system board **(2)**.

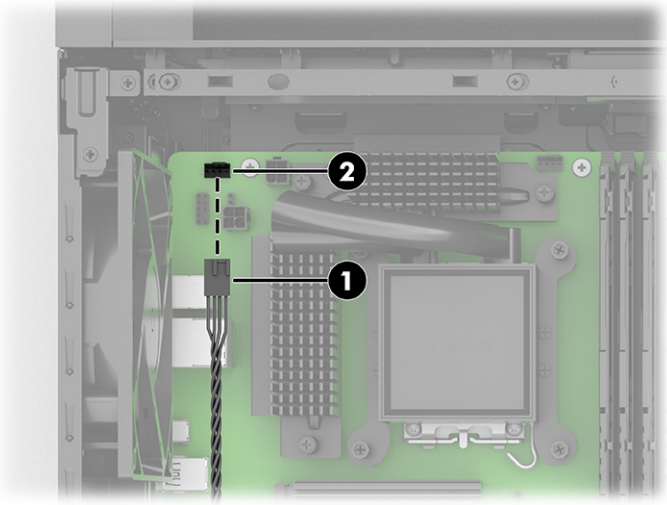

Screw kit

Use this information to determine installation locations of the screws in the screw kit.

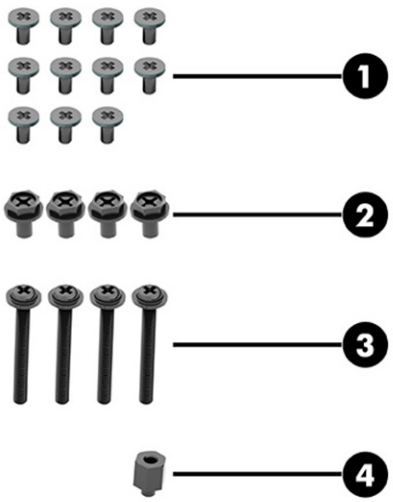

Table 2-5 Identifying the screw kit

Screw kit	
1	System board screws (11)
2	Power supply screws (4)
3	Bottom front fan long screws (4)
4	Hex screw as extra standoff for microATX system board

3 Backing up, restoring, and recovering

You can use Windows tools or HP software to back up your information, create a restore point, reset your computer, create recovery media, or restore your computer to its factory state. Performing these standard procedures can return your computer to a working state faster.

IMPORTANT: If you will be performing recovery procedures on a tablet, the tablet battery must be at least 70% charged before you start the recovery process.

IMPORTANT: For a tablet with a detachable keyboard, connect the tablet to the keyboard base before beginning any recovery process.

Backing up information and creating recovery media

These methods of creating recovery media and backups are available on select products only.

Using Windows tools for backing up

HP recommends that you back up your information immediately after initial setup. You can do this task either using Windows Backup locally with an external USB drive or using online tools.

IMPORTANT: Windows is the only option that allows you to back up your personal information. Schedule regular backups to avoid information loss.

NOTE: If computer storage is 32 GB or less, Microsoft® System Restore is disabled by default.

Using the HP Cloud Recovery Download Tool to create recovery media (select products only)

You can use the HP Cloud Recovery Download Tool to create HP Recovery media on a bootable USB flash drive.

For details:

- Go to http://www.hp.com, search for HP Cloud Recovery, and then select the result that matches the type of computer that you have.

NOTE: If you cannot create recovery media yourself, contact support to obtain recovery discs. Go to http://www.hp.com/support, select your country or region, and then follow the on-screen instructions.

IMPORTANT: HP recommends that you follow the Restoring and recovery methods on page 55 to restore your computer before you obtain and use the HP recovery discs. Using a recent backup can return your machine to a working state sooner than using the HP recovery discs. After the system is restored, reinstalling all the operating system software released since your initial purchase can be a lengthy process.

Restoring and recovering your system

You have several tools available to recover your system both within and outside of Windows if the desktop cannot load.

HP recommends that you attempt to restore your system using the Restoring and recovery methods on page 55.

Creating a system restore

System Restore is available in Windows. The System Restore software can automatically or manually create restore points, or snapshots, of the system files and settings on the computer at a particular point.

When you use System Restore, it returns your computer to its state at the time you made the restore point. Your personal files and documents should not be affected.

Restoring and recovery methods

After you run the first method, test to see whether the issue still exists before you proceed to the next method, which might now be unnecessary.

1. Run a Microsoft System Restore.
2. Run Reset this PC.

   NOTE: The options **Remove everything** and then **Fully clean the drive** can take several hours to complete and leave no information on your computer. It is the safest way to reset your computer before you recycle it.

3. Recover using HP Recovery media. For more information, see Recovering using HP Recovery media on page 55.

For more information about the first two methods, see the Get Help app:

Select the **Start** button, select the **Get Help** app, and then enter the task you want to perform.

NOTE: You must be connected to the internet to access the Get Help app.

Recovering using HP Recovery media

You can use HP Recovery media to recover the original operating system and software programs that were installed at the factory. On select products, it can be created on a bootable USB flash drive using the HP Cloud Recovery Download Tool.

For details, see Using the HP Cloud Recovery Download Tool to create recovery media (select products only) on page 54.

NOTE: If you cannot create recovery media yourself, contact support to obtain recovery discs. Go to http://www.hp.com/support, select your country or region, and then follow the on-screen instructions.

To recover your system:

- Insert the HP Recovery media, and then restart the computer.

NOTE: HP recommends that you follow the Restoring and recovery methods on page 55 to restore your computer before you obtain and use the HP recovery discs. Using a recent backup can return your machine to a working state sooner than using the HP recovery discs. After the system is restored, reinstalling all the operating system software released since your initial purchase can be a lengthy process.

Changing the computer boot order

If your computer does not restart using the HP Recovery media, you can change the computer boot order, the order of devices listed in BIOS for startup information. You can select an optical drive or a USB flash drive, depending on the location of your HP Recovery media.

IMPORTANT: For a tablet with a detachable keyboard, connect the tablet to the keyboard base before beginning these steps.

To change the boot order:

1. Insert the HP Recovery media.
2. Access the system **Startup** menu.
   - For computers or tablets with keyboards attached, turn on or restart the computer or tablet, quickly press esc, and then press f9 for boot options.
   - For tablets without keyboards, turn on or restart the tablet, quickly press and hold the volume up button, and then select **f9**.

     – or –

     Turn on or restart the tablet, quickly press and hold the volume down button, and then select **f9**.
3. Select the optical drive or USB flash drive from which you want to boot, and then follow the on-screen instructions.

Using HP Sure Recover (select products only)

Select computer models are configured with HP Sure Recover, a PC operating system (OS) recovery solution built into the hardware and software. HP Sure Recover can fully restore the HP OS image without installed recovery software.

Using HP Sure Recover, an administrator or user can restore the system and install:

- Latest version of the operating system
- Platform-specific device drivers
- Software applications, in the case of a custom image

To access the latest documentation for HP Sure Recover, go to http://www.hp.com/support. Follow the on-screen instructions to find your product and locate your documentation.

4 Using HP PC Hardware Diagnostics

You can use the HP PC Hardware Diagnostics utility to determine whether your computer hardware is running properly. The three versions are HP PC Hardware Diagnostics Windows, HP PC Hardware Diagnostics UEFI (Unified Extensible Firmware Interface), and (for select products only) Remote HP PC Hardware Diagnostics UEFI, a firmware feature.

Using HP PC Hardware Diagnostics Windows (select products only)

HP PC Hardware Diagnostics Windows is a Windows-based utility that allows you to run diagnostic tests to determine whether the computer hardware is functioning properly. The tool runs within the Windows operating system to diagnose hardware failures.

If HP PC Hardware Diagnostics Windows is not installed on your computer, first you must download and install it. To download HP PC Hardware Diagnostics Windows, see Downloading HP PC Hardware Diagnostics Windows on page 58.

Using an HP PC Hardware Diagnostics Windows hardware failure ID code

When HP PC Hardware Diagnostics Windows detects a failure that requires hardware replacement, a 24-digit failure ID code is generated for select component tests. For interactive tests, such as keyboard, mouse, or audio and video palette, you must perform troubleshooting steps before you can receive a failure ID.

- You have several options after you receive a failure ID:
  - Select **Next** to open the Event Automation Service (EAS) page, where you can log the case.

    – or –

  - Scan the QR code with your mobile device, which takes you to the EAS page, where you can log the case.

    – or –

  - Select the box next to the 24-digit failure ID to copy your failure code and send it to support.

Accessing HP PC Hardware Diagnostics Windows

After HP PC Hardware Diagnostics Windows is installed, you can access it from HP Support Assistant or the Start menu.

Accessing HP PC Hardware Diagnostics Windows from HP Help and Support (select products only)

After HP PC Hardware Diagnostics Windows is installed, follow these steps to access it from HP Help and Support.

1. Select the **Start** button, and then select **HP Help and Support**.
2. Select **HP PC Hardware Diagnostics Windows**.
3. When the tool opens, select the type of diagnostic test that you want to run, and then follow the on-screen instructions.

NOTE: To stop a diagnostic test, select **Cancel**.

Accessing HP PC Hardware Diagnostics Windows from Support Assistant

After HP PC Hardware Diagnostics Windows is installed, follow these steps to access it from HP Support Assistant.

1. Type `support` in the taskbar search box, and then select the **HP Support Assistant** app.

   – or –

   Select the question mark icon in the taskbar.

2. Select **Troubleshooting and fixes**.
3. Select **Diagnostics**, and then select **HP PC Hardware Diagnostics Windows**.
4. When the tool opens, select the type of diagnostic test that you want to run, and then follow the on-screen instructions.

NOTE: To stop a diagnostic test, select **Cancel**.

Accessing HP PC Hardware Diagnostics Windows from the Start menu (select products only)

After HP PC Hardware Diagnostics Windows is installed, follow these steps to access it from the Start menu.

1. Select the **Start** button.
2. Right-click **HP PC Hardware Diagnostics for Windows**, select **More**, and then select **Run as administrator**.
3. When the tool opens, select the type of diagnostic test that you want to run, and then follow the on-screen instructions.

NOTE: To stop a diagnostic test, select **Cancel**.

Downloading HP PC Hardware Diagnostics Windows

The HP PC Hardware Diagnostics Windows downloading instructions are provided in English only. You must use a Windows computer to download this tool because only .exe files are provided.

Downloading the latest HP PC Hardware Diagnostics Windows version from HP

To download HP PC Hardware Diagnostics Windows from HP, follow these steps.

1. Go to http://www.hp.com/go/techcenter/pcdiags. The HP PC Diagnostics home page is displayed.
2. Select **Download HP Diagnostics Windows**, and then select the specific Windows diagnostics version to download to your computer or a USB flash drive.

The tool downloads to the selected location.

Downloading the HP PC Hardware Diagnostics Windows from the Microsoft Store

You can download the HP PC Hardware Diagnostics Windows from the Microsoft Store.

1. Select the Microsoft Store app on your desktop or enter `Microsoft Store` in the taskbar search box.
2. Enter `HP PC Hardware Diagnostics Windows` in the **Microsoft Store** search box.

3. Follow the on-screen directions.

The tool downloads to the selected location.

Downloading HP Hardware Diagnostics Windows by product name or number (select products only)

You can download HP PC Hardware Diagnostics Windows by product name or number.

NOTE: For some products, you might have to download the software to a USB flash drive by using the product name or number.

1. Go to http://www.hp.com/support.
2. Select **Software and Drivers**, select your type of product, and then enter the product name or number in the search box that is displayed.
3. In the **Diagnostics** section, select **Download**, and then follow the on-screen instructions to select the specific Windows diagnostics version to be downloaded to your computer or USB flash drive.

The tool downloads to the selected location.

Installing HP PC Hardware Diagnostics Windows

To install HP PC Hardware Diagnostics Windows, navigate to the folder on your computer or the USB flash drive where the .exe file downloaded, double-click the .exe file, and then follow the on-screen instructions.

Using HP PC Hardware Diagnostics UEFI

HP PC Hardware Diagnostics UEFI (Unified Extensible Firmware Interface) allows you to run diagnostic tests to determine whether the computer hardware is functioning properly. The tool runs outside the operating system so that it can isolate hardware failures from issues that are caused by the operating system or other software components.

NOTE: For Windows 10 S computers, you must use a Windows computer and a USB flash drive to download and create the HP UEFI support environment because only .exe files are provided. For more information, see Downloading HP PC Hardware Diagnostics UEFI to a USB flash drive on page 60.

If your PC does not start in Windows, you can use HP PC Hardware Diagnostics UEFI to diagnose hardware issues.

Using an HP PC Hardware Diagnostics UEFI hardware failure ID code

When HP PC Hardware Diagnostics UEFI detects a failure that requires hardware replacement, a 24-digit failure ID code is generated.

For assistance in solving the problem:

- Select **Contact HP**, accept the HP privacy disclaimer, and then use a mobile device to scan the failure ID code that appears on the next screen. The HP Customer Support - Service Center page appears with your failure ID and product number automatically filled in. Follow the on-screen instructions.

  – or –

  Contact support, and provide the failure ID code.

NOTE: To start diagnostics on a convertible computer, your computer must be in notebook mode, and you must use the attached keyboard.

NOTE: If you need to stop a diagnostic test, press esc.

Starting HP PC Hardware Diagnostics UEFI

To start HP PC Hardware Diagnostics UEFI, follow this procedure.

1. Turn on or restart the computer, and quickly press esc.
2. Press f2.

   The BIOS searches three places for the diagnostic tools, in the following order:

   1. Connected USB flash drive

      NOTE: To download the HP PC Hardware Diagnostics UEFI tool to a USB flash drive, see Downloading the latest HP PC Hardware Diagnostics UEFI version on page 60.

   2. Hard drive
   3. BIOS
3. When the diagnostic tool opens, select a language, select the type of diagnostic test you want to run, and then follow the on-screen instructions.

Downloading HP PC Hardware Diagnostics UEFI to a USB flash drive

Downloading HP PC Hardware Diagnostics UEFI to a USB flash drive can be useful in some situations.

- HP PC Hardware Diagnostics UEFI is not included in the preinstallation image.
- HP PC Hardware Diagnostics UEFI is not included in the HP Tool partition.
- The hard drive is damaged.

NOTE: The HP PC Hardware Diagnostics UEFI downloading instructions are provided in English only, and you must use a Windows computer to download and create the HP UEFI support environment because only .exe files are provided.

Downloading the latest HP PC Hardware Diagnostics UEFI version

To download the latest HP PC Hardware Diagnostics UEFI version to a USB flash drive, follow this procedure.

1. Go to http://www.hp.com/go/techcenter/pcdiags. The HP PC Diagnostics home page is displayed.
2. Select **Download HP Diagnostics UEFI**, and then select **Run**.

Downloading HP PC Hardware Diagnostics UEFI by product name or number (select products only)

You can download HP PC Hardware Diagnostics UEFI by product name or number (select products only) to a USB flash drive.

NOTE: For some products, you might have to download the software to a USB flash drive by using the product name or number.

1. Go to http://www.hp.com/support.
2. Enter the product name or number, select your computer, and then select your operating system.

3. In the **Diagnostics** section, follow the on-screen instructions to select and download the specific UEFI Diagnostics version for your computer.

Using Remote HP PC Hardware Diagnostics UEFI settings (select products only)

Remote HP PC Hardware Diagnostics UEFI is a firmware (BIOS) feature that downloads HP PC Hardware Diagnostics UEFI to your computer. It can then execute the diagnostics on your computer, and it might upload results to a preconfigured server.

For more information about Remote HP PC Hardware Diagnostics UEFI, go to http://www.hp.com/go/techcenter/pcdiags, and then select **Find out more**.

Downloading Remote HP PC Hardware Diagnostics UEFI

HP Remote PC Hardware Diagnostics UEFI is also available as a SoftPaq that you can download to a server.

Downloading the latest Remote HP PC Hardware Diagnostics UEFI version

You can download the latest HP PC Hardware Diagnostics UEFI version to a USB flash drive.

1. Go to http://www.hp.com/go/techcenter/pcdiags. The HP PC Diagnostics home page is displayed.
2. Select **Download Remote Diagnostics**, and then select **Run**.

Downloading Remote HP PC Hardware Diagnostics UEFI by product name or number

You can download HP Remote PC Hardware Diagnostics UEFI by product name or number.

NOTE: For some products, you might have to download the software by using the product name or number.

1. Go to http://www.hp.com/support.
2. Select **Software and Drivers**, select your type of product, enter the product name or number in the search box that is displayed, select your computer, and then select your operating system.
3. In the **Diagnostics** section, follow the on-screen instructions to select and download the **Remote UEFI** version for the product.

Customizing Remote HP PC Hardware Diagnostics UEFI settings

Using the Remote HP PC Hardware Diagnostics setting in Computer Setup (BIOS), you can perform several customizations.

- Set a schedule for running diagnostics unattended. You can also start diagnostics immediately in interactive mode by selecting **Execute Remote HP PC Hardware Diagnostics**.
- Set the location for downloading the diagnostic tools. This feature provides access to the tools from the HP website or from a server that has been preconfigured for use. Your computer does not require the traditional local storage (such as a hard drive or USB flash drive) to run remote diagnostics.
- Set a location for storing the test results. You can also set the user name and password that you use for uploads.
- Display status information about the diagnostics run previously.

To customize Remote HP PC Hardware Diagnostics UEFI settings, follow these steps:

1. Turn on or restart the computer, and when the HP logo appears, press f10 to enter Computer Setup.
2. Select **Advanced**, and then select **Settings**.
3. Make your customization selections.
4. Select **Main**, and then **Save Changes and Exit** to save your settings.

Your changes take effect when the computer restarts.

5 Computer operating guidelines, routine care, and shipping preparation

Follow these guidelines to ensure the best performance and useful life of your computer.

Operating guidelines and routine care

HP has developed guidelines to help you properly set up and care for the computer and monitor.

- Keep the computer away from excessive moisture, direct sunlight, and extreme heat and cold.
- Operate the computer on a sturdy, level surface. Leave a 10.2 cm (4 inch) clearance on all vented sides of the computer and above the monitor to permit the required airflow.
- Never restrict the airflow into the computer by blocking any vents or air intakes. Do not place the keyboard, with the keyboard feet down, directly against the front of the desktop unit because this also restricts airflow.
- Never operate the computer with the access panel or any of the expansion card slot covers removed.
- Do not stack computers on top of each other or place computers so near each other that they are subject to each other's recirculated or preheated air.
- To operate a computer within a separate enclosure, intake and exhaust ventilation must be provided on the enclosure, and the previous operating guidelines still apply.
- Keep liquids away from the computer and keyboard.
- Never cover the ventilation slots on the monitor with any type of material.
- Install or enable power management functions of the operating system or other software, including sleep states.
- Turn off the computer before you do either of the following tasks:
  - Wipe the exterior of the computer with a soft, damp cloth as needed. Cleaning products might discolor or damage the finish. See Removing dirt and debris from your computer on page 64 for the recommended steps to clean the high-touch, external surfaces on your computer. After you remove the dirt and debris, you can also clean the surfaces with a disinfectant. See Cleaning your computer with a disinfectant on page 64 for guidelines to help prevent the spread of harmful bacteria and viruses.
  - Occasionally clean the air vents on all vented sides of the computer. Lint, dust, and other foreign matter can block the vents and limit the airflow.

Cleaning your computer

Cleaning your computer regularly removes dirt and debris so that your device continues to operate at its best. Use the following information to safely clean the external surfaces of your computer.

Removing dirt and debris from your computer

Here are the recommended steps to clean dirt and debris from your computer.

1. Wear disposable gloves made of latex (or nitrile gloves, if you are latex-sensitive) when cleaning the surfaces.
2. Turn off your device and unplug the power cord and other connected external devices. Remove any installed batteries from items such as wireless keyboards.

CAUTION: To prevent electric shock or damage to components, never clean a product while it is turned on or plugged in.

3. Moisten a microfiber cloth with water. The cloth should be moist, but not dripping wet.

IMPORTANT: To avoid damaging the surface, avoid abrasive cloths, towels, and paper towels.

4. Wipe the exterior of the product gently with the moistened cloth.

IMPORTANT: Keep liquids away from the product. Avoid getting moisture in any openings. If liquid makes its way inside your HP product, it can cause damage to the product. Do not spray liquids directly on the product. Do not use aerosol sprays, solvents, abrasives, or cleaners containing hydrogen peroxide or bleach that might damage the finish.

5. Start with the display (if applicable). Wipe carefully in one direction, and move from the top of the display to the bottom. Finish with any flexible cables, like power cord, keyboard cable, and USB cables.
6. Be sure that surfaces have completely air-dried before turning the device on after cleaning.
7. Discard the gloves after each cleaning. Clean your hands immediately after you remove the gloves.

See Cleaning your computer with a disinfectant on page 64 for recommended steps to clean the high-touch, external surfaces on your computer to help prevent the spread of harmful bacteria and viruses.

Cleaning your computer with a disinfectant

The World Health Organization (WHO) recommends cleaning surfaces, followed by disinfection, as a best practice for preventing the spread of viral respiratory illnesses and harmful bacteria.

After cleaning the external surfaces of your computer using the steps in Removing dirt and debris from your computer on page 64, you might also choose to clean the surfaces with a disinfectant. A disinfectant that is within HP's cleaning guidelines is an alcohol solution consisting of 70% isopropyl alcohol and 30% water. This solution is also known as rubbing alcohol and is sold in most stores.

Follow these steps when disinfecting high-touch, external surfaces on your computer:

1. Wear disposable gloves made of latex (or nitrile gloves, if you are latex-sensitive) when cleaning the surfaces.
2. Turn off your device and unplug the power cord and other connected external devices. Remove any installed batteries from items such as wireless keyboards.

CAUTION: To prevent electric shock or damage to components, never clean a product while it is turned on or plugged in.

3. Moisten a microfiber cloth with a mixture of 70% isopropyl alcohol and 30% water. The cloth should be moist, but not dripping wet.

CAUTION: Do not use any of the following chemicals or any solutions that contain them, including spray-based surface cleaners: bleach, peroxides (including hydrogen peroxide), acetone, ammonia, ethyl alcohol, methylene chloride, or any petroleum-based materials, such as gasoline, paint thinner, benzene, or toluene.

IMPORTANT: To avoid damaging the surface, avoid abrasive cloths, towels, and paper towels.

4. Wipe the exterior of the product gently with the moistened cloth.

IMPORTANT: Keep liquids away from the product. Avoid getting moisture in any openings. If liquid makes its way inside your HP product, it can cause damage to the product. Do not spray liquids directly on the product. Do not use aerosol sprays, solvents, abrasives, or cleaners containing hydrogen peroxide or bleach that might damage the finish.

5. Start with the display (if applicable). Wipe carefully in one direction, and move from the top of the display to the bottom. Finish with any flexible cables, like power cord, keyboard cable, and USB cables.
6. Be sure that surfaces have completely air-dried before turning the device on after cleaning.
7. Discard the gloves after each cleaning. Clean your hands immediately after you remove the gloves.

Shipping preparation

If you have to ship your computer, follow these tips to keep your equipment safe.

1. Back up the hard drive files to an external storage device. Be sure that the backup media is not exposed to electrical or magnetic impulses while stored or in transit.

NOTE: The hard drive locks automatically when the system power is turned off.

2. Remove and store all removable media.
3. Turn off the computer and external devices.
4. Disconnect the power cord from the AC outlet, and then from the computer.
5. Disconnect the system components and external devices from their power sources and then from the computer.

NOTE: Be sure that all boards are seated properly and secured in the board slots before shipping the computer.

6. Pack the system components and external devices in their original packing boxes or similar packaging with sufficient packing material to protect them.

6 Electrostatic discharge

Electrostatic discharge is the release of static electricity when two objects come into contact—for example, the shock you receive when you walk across the carpet and touch a metal door knob.

A discharge of static electricity from fingers or other electrostatic conductors may damage electronic components.

IMPORTANT: To prevent damage to the computer, damage to a drive, or loss of information, observe these precautions:

- If removal or installation instructions direct you to unplug the computer, first be sure that it is properly grounded.
- Keep components in their electrostatic-safe containers until you are ready to install them.
- Avoid touching pins, leads, and circuitry. Handle electronic components as little as possible.
- Use nonmagnetic tools.
- Before handling components, discharge static electricity by touching an unpainted metal surface.
- If you remove a component, place it in an electrostatic-safe container.

7 Accessibility

HP's goal is to design, produce, and market products, services, and information that everyone everywhere can use, either on a stand-alone basis or with appropriate third-party assistive technology (AT) devices or applications.

HP and accessibility

Because HP works to weave diversity, inclusion, and work/life into the fabric of the company, it is reflected in everything HP does. HP strives to create an inclusive environment focused on connecting people to the power of technology throughout the world.

Finding the technology tools you need

Technology can unleash your human potential. Assistive technology removes barriers and helps you create independence at home, at work, and in the community. Assistive technology helps increase, maintain, and improve the functional capabilities of electronic and information technology.

For more information, see Finding the best assistive technology on page 68.

The HP commitment

HP is committed to providing products and services that are accessible for people with disabilities. This commitment supports the company's diversity objectives and helps ensure that the benefits of technology are available to all.

The HP accessibility goal is to design, produce, and market products and services that can be effectively used by everyone, including people with disabilities, either on a stand-alone basis or with appropriate assistive devices.

To achieve that goal, this Accessibility Policy establishes seven key objectives to guide HP actions. All HP managers and employees are expected to support these objectives and their implementation in accordance with their roles and responsibilities:

- Raise the level of awareness of accessibility issues within HP, and provide employees with the training they need to design, produce, market, and deliver accessible products and services.
- Develop accessibility guidelines for products and services, and hold product development groups accountable for implementing these guidelines where competitively, technically, and economically feasible.
- Involve people with disabilities in the development of accessibility guidelines and in the design and testing of products and services.
- Document accessibility features, and make information about HP products and services publicly available in an accessible form.
- Establish relationships with leading assistive technology and solution providers.
- Support internal and external research and development that improves assistive technology relevant to HP products and services.
- Support and contribute to industry standards and guidelines for accessibility.

International Association of Accessibility Professionals (IAAP)

IAAP is a not-for-profit association focused on advancing the accessibility profession through networking, education, and certification. The objective is to help accessibility professionals develop and advance their careers and to better enable organizations to integrate accessibility into their products and infrastructure.

As a founding member, HP joined to participate with other organizations to advance the field of accessibility. This commitment supports HP's accessibility goal of designing, producing, and marketing products and services that people with disabilities can effectively use.

IAAP will make the profession strong by globally connecting individuals, students, and organizations to learn from one another. If you are interested in learning more, go to http://www.accessibilityassociation.org to join the online community, sign up for newsletters, and learn about membership options.

Finding the best assistive technology

Everyone, including people with disabilities or age-related limitations, should be able to communicate, express themselves, and connect with the world using technology. HP is committed to increasing accessibility awareness within HP and with our customers and partners.

Whether it's large fonts that are easy on the eyes, voice recognition that lets you give your hands a rest, or any other assistive technology to help with your specific situation—a variety of assistive technologies make HP products easier to use. How do you choose?

Assessing your needs

Technology can unleash your potential. Assistive technology removes barriers and helps you create independence at home, at work, and in the community. Assistive technology (AT) helps increase, maintain, and improve the functional capabilities of electronic and information technology.

You can choose from many AT products. Your AT assessment should allow you to evaluate several products, answer your questions, and facilitate your selection of the best solution for your situation. You will find that professionals qualified to do AT assessments come from many fields, including those licensed or certified in physical therapy, occupational therapy, speech/language pathology, and other areas of expertise. Others, while not certified or licensed, can also provide evaluation information. You will want to ask about the individual's experience, expertise, and fees to determine if they are appropriate for your needs.

Accessibility for HP products

These links provide information about accessibility features and assistive technology, if applicable and available in your country or region, that are included in various HP products. These resources will help you select the specific assistive technology features and products most appropriate for your situation.

- HP Aging & Accessibility: Go to http://www.hp.com, type `Accessibility` in the search box. Select **Office of Aging and Accessibility**.
- HP computers: For Windows 7, Windows 8, and Windows 10, go to http://www.hp.com/support, type `Windows Accessibility Options` in the **Search our knowledge** search box. Select the appropriate operating system in the results.
- HP Shopping, peripherals for HP products: Go to http://store.hp.com, select **Shop**, and then select **Monitors** or **Accessories**.

If you need additional support with the accessibility features on your HP product, see Contacting support on page 71.

Additional links to external partners and suppliers that may provide additional assistance:

- Microsoft Accessibility information (Windows 7, Windows 8, Windows 10, Microsoft Office)
- Google Products accessibility information (Android, Chrome, Google Apps)

Standards and legislation

Countries worldwide are enacting regulations to improve access to products and services for persons with disabilities. These regulations are historically applicable to telecommunications products and services, PCs and printers with certain communications and video playback features, their associated user documentation, and their customer support.

Standards

The US Access Board created Section 508 of the Federal Acquisition Regulation (FAR) standards to address access to information and communication technology (ICT) for people with physical, sensory, or cognitive disabilities.

The standards contain technical criteria specific to various types of technologies, as well as performance-based requirements which focus on functional capabilities of covered products. Specific criteria cover software applications and operating systems, web-based information and applications, computers, telecommunications products, video and multimedia, and self-contained closed products.

Mandate 376 – EN 301 549

The European Union created the EN 301 549 standard within Mandate 376 as an online toolkit for public procurement of ICT products. The standard specifies the accessibility requirements applicable to ICT products and services, with a description of the test procedures and evaluation methodology for each requirement.

Web Content Accessibility Guidelines (WCAG)

Web Content Accessibility Guidelines (WCAG) from the W3C's Web Accessibility Initiative (WAI) helps web designers and developers create sites that better meet the needs of people with disabilities or age-related limitations.

WCAG advances accessibility across the full range of web content (text, images, audio, and video) and web applications. WCAG can be precisely tested, is easy to understand and use, and allows web developers flexibility for innovation. WCAG 2.0 has also been approved as ISO/IEC 40500:2012.

WCAG specifically addresses barriers to accessing the web experienced by people with visual, auditory, physical, cognitive, and neurological disabilities, and by older web users with accessibility needs. WCAG 2.0 provides characteristics of accessible content:

- **Perceivable** (for instance, by addressing text alternatives for images, captions for audio, adaptability of presentation, and color contrast)
- **Operable** (by addressing keyboard access, color contrast, timing of input, seizure avoidance, and navigability)
- **Understandable** (by addressing readability, predictability, and input assistance)
- **Robust** (for instance, by addressing compatibility with assistive technologies)

Legislation and regulations

Accessibility of IT and information has become an area of increasing legislative importance. These links provide information about key legislation, regulations, and standards.

- United States
- Canada
- Europe
- Australia

Useful accessibility resources and links

These organizations, institutions, and resources might be good sources of information about disabilities and age-related limitations.

NOTE: This is not an exhaustive list. These organizations are provided for informational purposes only. HP assumes no responsibility for information or contacts you encounter on the internet. Listing on this page does not imply endorsement by HP.

Organizations

These organizations are a few of the many that provide information about disabilities and age-related limitations.

- American Association of People with Disabilities (AAPD)
- The Association of Assistive Technology Act Programs (ATAP)
- Hearing Loss Association of America (HLAA)
- Information Technology Technical Assistance and Training Center (ITTATC)
- Lighthouse International
- National Association of the Deaf
- National Federation of the Blind
- Rehabilitation Engineering & Assistive Technology Society of North America (RESNA)
- Telecommunications for the Deaf and Hard of Hearing, Inc. (TDI)
- W3C Web Accessibility Initiative (WAI)

Educational institutions

Many educational institutions, including these examples, provide information about disabilities and age-related limitations.

- California State University, Northridge, Center on Disabilities (CSUN)
- University of Wisconsin - Madison, Trace Center
- University of Minnesota computer accommodations program

Other disability resources

Many resources, including these examples, provide information about disabilities and age-related limitations.

- ADA (Americans with Disabilities Act) Technical Assistance Program

- ILO Global Business and Disability network
- EnableMart
- European Disability Forum
- Job Accommodation Network
- Microsoft Enable

HP links

These HP-specific links provide information that relates to disabilities and age-related limitations.

HP comfort and safety guide

HP public sector sales

Contacting support

HP offers technical support and assistance with accessibility options for customers with disabilities.

NOTE: Support is in English only.

- Customers who are deaf or hard of hearing who have questions about technical support or accessibility of HP products:
  - Use TRS/VRS/WebCapTel to call (877) 656-7058 Monday through Friday, 6 a.m. to 9 p.m. Mountain Time.
- Customers with other disabilities or age-related limitations who have questions about technical support or accessibility of HP products:
  - Call (888) 259-5707 Monday through Friday, 6 a.m. to 9 p.m. Mountain Time.

Index

A

access panel
  removal and replacement 8, 22
accessibility 67-69, 71
accessibility needs assessment 68
assistive technology (AT)
  finding 68
  purpose 67
AT (assistive technology)
  finding 68
  purpose 67
audio-in (microphone) jack,
  identifying 2-5
audio-in jack, identifying 4, 5
audio-out (headphone) jack,
  identifying 2, 3
audio-out jack, identifying 4, 5

B

backup, creating 54
backups 54
boot order, changing 56

C

cabling
  lighting board 50
  rear fan 52
  top I/O 48
caring for your computer 63
cautions 6
chassis feet
  removal and replacement 7
cleaning your computer 63
  disinfecting 64
  removing dirt and debris 64
computer operating guidelines 63
connecting
  rear fan cable 52
cryo chamber 43
customer support, accessibility 71

D

dust filter
  removal and replacement 20

E

electrostatic discharge 66

F

fan
  removal and replacement 34
  upgrade locations 42, 43
feet
  removal and replacement 7
front 120 mm fan 46
front 240 mm fan 46
front bezel
  removal and replacement 19
front panel components on 40L
  models 2
front panel components on 45L
  models 2

G

glass access panel
  removal and replacement 8
graphics card
  removal and replacement 14

H

hard drive
  removal and replacement 24
hardware setup 6
HP Assistive Policy 67
HP PC Hardware Diagnostics UEFI
  downloading 60
  failure ID code 59
  starting 60
  using 59
HP PC Hardware Diagnostics
  Windows
  accessing 57, 58
  downloading 58
  failure ID code 57
  installing 59
  using 57
HP Recovery media
  recovery 55
HP Sure Recover 56

I

installing
  memory 9
internal light bar
  removal and replacement 37
International Association of
  Accessibility Professionals 68

J

jacks
  audio-in 4, 5
  audio-in (microphone) 2-5
  audio-out 4, 5
  audio-out (headphone) 2, 3

L

lighting board
  cabling 50
lighting board cabling 50
liquid cooling
  upgrade locations 42

M

memory
  removal and replacement 9
  socket population 9
  specifications 9
memory module
  installation 9
  removal and replacement 10

N

non-HP system board
  considerations 47

P

populating DIMM sockets 9
power supply
  removal and replacement 39

R

rear fan cable
  connecting 52
rear panel components on 40L
  models 4

rear panel components on 45L
models 3
recovery 54
discs 55
media 55
USB flash drive 55
recovery media 54
creating using HP Cloud Recovery Download Tool 54
creating using Windows tools 54
Remote HP PC Hardware Diagnostics
UEFI settings
customizing 61
using 61
removal and replacement
access panel 8, 22
chassis feet 7
dust filter 20
fan 34
feet 7
front bezel 19
glass access panel 8
graphics card 14
hard drive 24
internal light bar 37
memory 9
memory modules 10
power supply 39
RGB board 31
RGB fan 34
RGB logo module in 40L models 30
RGB logo module in 45L models 26
right access panel 22
solid-state drive 11
WLAN module 17
resources, accessibility 70
restoring 54
restoring and recovery methods 55
RGB board
removal and replacement 31
RGB fans
removal and replacement 34
RGB logo module in 40L models
removal and replacement 30
RGB logo module in 45L models
removal and replacement 26
right access panel
removal and replacement 22

S

screw kit
installation locations 52
Section 508 accessibility
standards 69
shipping preparation 65
solid-state drive
removal and replacement 11
specifications
memory 9
standards and legislation, accessibility 69
system restore 55
system restore point, creating 54

T

top I/O cabling 48

U

upgrade locations
fan 42, 43
liquid cooling 42

V

ventilation guidelines 63

W

warnings 6
Windows
backup 54
recovery media 54
system restore point 54
Windows tools, using 54
WLAN module
removal and replacement 17