

Installation Guide for Cisco IP Phones with Multiplatform Firmware

First Published: 2020-08-13

Last Modified: 2025-05-09

Americas Headquarters

Cisco Systems, Inc.
170 West Tasman Drive
San Jose, CA 95134-1706
USA
http://www.cisco.com
Tel: 408 526-4000
800 553-NETS (6387)
Fax: 408 527-0883

THE SPECIFICATIONS AND INFORMATION REGARDING THE PRODUCTS IN THIS MANUAL ARE SUBJECT TO CHANGE WITHOUT NOTICE. ALL STATEMENTS, INFORMATION, AND RECOMMENDATIONS IN THIS MANUAL ARE BELIEVED TO BE ACCURATE BUT ARE PRESENTED WITHOUT WARRANTY OF ANY KIND, EXPRESS OR IMPLIED. USERS MUST TAKE FULL RESPONSIBILITY FOR THEIR APPLICATION OF ANY PRODUCTS.

THE SOFTWARE LICENSE AND LIMITED WARRANTY FOR THE ACCOMPANYING PRODUCT ARE SET FORTH IN THE INFORMATION PACKET THAT SHIPPED WITH THE PRODUCT AND ARE INCORPORATED HEREIN BY THIS REFERENCE. IF YOU ARE UNABLE TO LOCATE THE SOFTWARE LICENSE OR LIMITED WARRANTY, CONTACT YOUR CISCO REPRESENTATIVE FOR A COPY.

The following information is for FCC compliance of Class A devices: This equipment has been tested and found to comply with the limits for a Class A digital device, pursuant to part 15 of the FCC rules. These limits are designed to provide reasonable protection against harmful interference when the equipment is operated in a commercial environment. This equipment generates, uses, and can radiate radio-frequency energy and, if not installed and used in accordance with the instruction manual, may cause harmful interference to radio communications. Operation of this equipment in a residential area is likely to cause harmful interference, in which case users will be required to correct the interference at their own expense.

The following information is for FCC compliance of Class B devices: This equipment has been tested and found to comply with the limits for a Class B digital device, pursuant to part 15 of the FCC rules. These limits are designed to provide reasonable protection against harmful interference in a residential installation. This equipment generates, uses and can radiate radio frequency energy and, if not installed and used in accordance with the instructions, may cause harmful interference to radio communications. However, there is no guarantee that interference will not occur in a particular installation. If the equipment causes interference to radio or television reception, which can be determined by turning the equipment off and on, users are encouraged to try to correct the interference by using one or more of the following measures:

- Reorient or relocate the receiving antenna.
- Increase the separation between the equipment and receiver.
- Connect the equipment into an outlet on a circuit different from that to which the receiver is connected.
- Consult the dealer or an experienced radio/TV technician for help.

Modifications to this product not authorized by Cisco could void the FCC approval and negate your authority to operate the product.

The Cisco implementation of TCP header compression is an adaptation of a program developed by the University of California, Berkeley (UCB) as part of UCB's public domain version of the UNIX operating system. All rights reserved. Copyright © 1981, Regents of the University of California.

NOTWITHSTANDING ANY OTHER WARRANTY HEREIN, ALL DOCUMENT FILES AND SOFTWARE OF THESE SUPPLIERS ARE PROVIDED "AS IS" WITH ALL FAULTS. CISCO AND THE ABOVE-NAMED SUPPLIERS DISCLAIM ALL WARRANTIES, EXPRESSED OR IMPLIED, INCLUDING, WITHOUT LIMITATION, THOSE OF MERCHANTABILITY, FITNESS FOR A PARTICULAR PURPOSE AND NONINFRINGEMENT OR ARISING FROM A COURSE OF DEALING, USAGE, OR TRADE PRACTICE.

IN NO EVENT SHALL CISCO OR ITS SUPPLIERS BE LIABLE FOR ANY INDIRECT, SPECIAL, CONSEQUENTIAL, OR INCIDENTAL DAMAGES, INCLUDING, WITHOUT LIMITATION, LOST PROFITS OR LOSS OR DAMAGE TO DATA ARISING OUT OF THE USE OR INABILITY TO USE THIS MANUAL, EVEN IF CISCO OR ITS SUPPLIERS HAVE BEEN ADVISED OF THE POSSIBILITY OF SUCH DAMAGES.

Any Internet Protocol (IP) addresses and phone numbers used in this document are not intended to be actual addresses and phone numbers. Any examples, command display output, network topology diagrams, and other figures included in the document are shown for illustrative purposes only. Any use of actual IP addresses or phone numbers in illustrative content is unintentional and coincidental.

All printed copies and duplicate soft copies of this document are considered uncontrolled. See the current online version for the latest version.

Cisco has more than 200 offices worldwide. Addresses and phone numbers are listed on the Cisco website at www.cisco.com/go/offices.

Cisco and the Cisco logo are trademarks or registered trademarks of Cisco and/or its affiliatesin the U.S. and other countries. To view a list of Cisco trademarks, go to this URL: www.cisco.com go trademarks. Third-party trademarks mentioned are the property of their respective owners. The use of the word partner does not imply a partnership relationship between Cisco and any other company. (1721R)

© 2020 Cisco Systems, Inc. All rights reserved.



CONTENTS

CHAPTER 1 **Basic Installation 1**

Connect Your Cisco IP Phone 2

Connect Your Conference Phone 7832 3

Connect Your Conference Phone 8832 4

CHAPTER 2 **Key Expansion Module Installation 5**

Install a Key Expansion Module on Your 6851 Phone 6

Install a Key Expansion Module on 8851, 8861, and 8865 Phones 7

CHAPTER 3 **Connect Headsets 8**

Connect Cisco Headsets 521 and 522 9

Connect Cisco Headsets 561 and 562 10

Connect Cisco Headset 730 12

CHAPTER 4 **Wall Mount Your Phone 14**

Wall Mount Your 6800 Series Phones 15

Wall Mount Your 6821 Phone 15

Wall Mount Your 6841/6851/6861/6871 Phone 16

Wall Mount Your 7800 Series Phones 18

Wall Mount Your 7811 Phone 18

Remove 7811 Phone from the Wall Mount 19

Wall Mount Your 7821 or 7841 Phone 20

Remove 7821 or 7841 Phone from the Wall Mount 22

Wall Mount Your 7861 Phone 22
Remove 7861 Phone from the Wall Mount 23
Wall Mount Your 8800 Series Phones 24
Remove 8800 Series Phone from the Wall Mount 24
Wall Mount Your 8851 or 8861 Phone with a KEM Attached 25
Remove 8800 Phone from the Wall Mount 27
Adjust the Handset Rest 28

CHAPTER 5 **Technical Details 29**

Physical and Operating Environment Specifications 30
Phone Power Requirements 32
Power Outage 35
Power Reduction 35



CHAPTER 1

Basic Installation

Connect Your Cisco IP Phone 2

Connect Your Conference Phone 7832 3

Connect Your Conference Phone 8832 4

Connect and Power Up a Cisco IP Phone

The ports on the rear panel of the phone are different on Cisco IP Phone 6800, 7800, and 8800 Series.

1

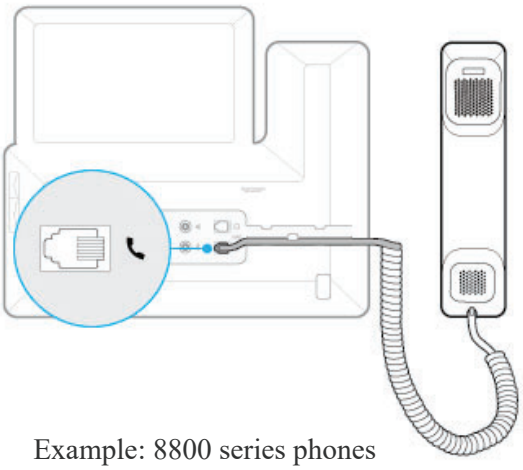

Example: 8800 series phones

2

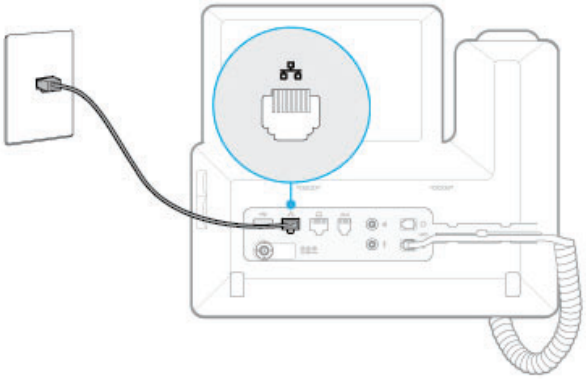

Plug in the Ethernet cable if you don't want to use the phone in a wireless network.

3

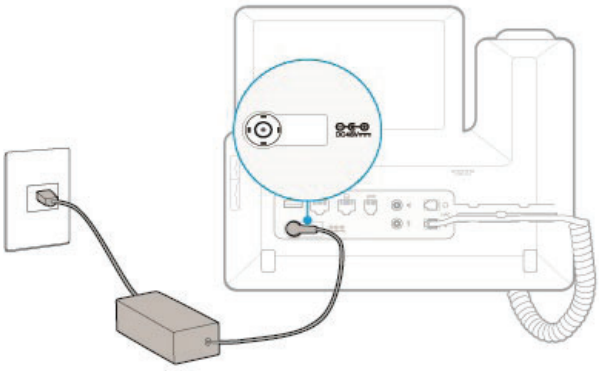

A power adapter is mandatory for 6841 and 6861 phones.

To avoid permanent damage on the phone, use the power adapter shipped with your phone.

4

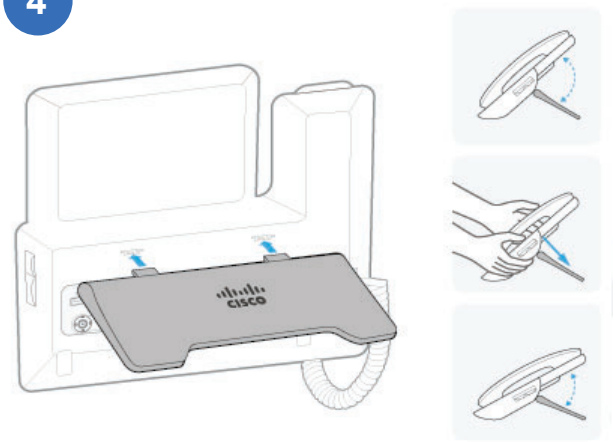

For 8800 series phones, you can adjust the angle of the foot stand.

Connect and Power Up a Conference Phone 7832

A conference phone needs power from one of following power sources:

- Power over Ethernet (PoE), which your network supplies.
- Cisco IP Phone Power Injector.

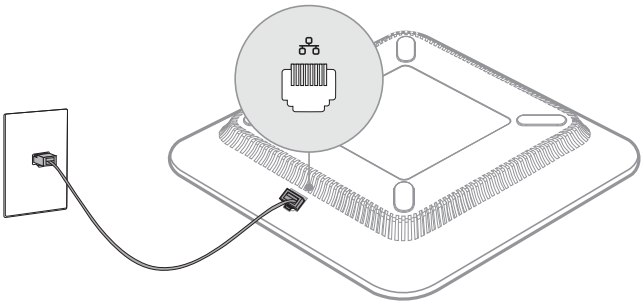

Connect a conference phone with Power over Ethernet (PoE).

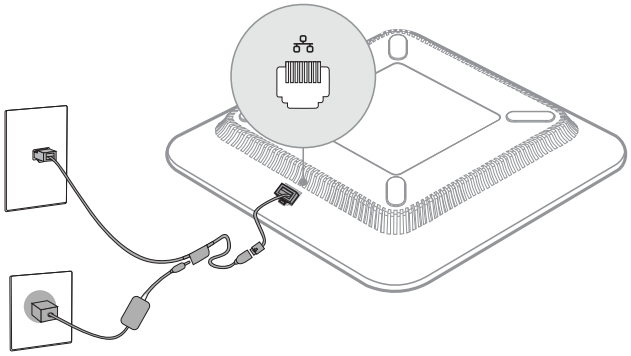

Connect a conference phone with Power Injector.

1. Plug the Power Injector into the LAN port with one Ethernet cable.
2. Connect the power cord to the Injector.
3. Plug the cord into an electrical outlet.
4. Use another Ethernet cable to connect the Injector to the conference phone.

In the EU and UK, your phone is shipped with a power switch cable that is required in order to provide power to your phone when using an AC-to-DC power supply. In this case:

1. Plug the Power Injector into the LAN port with one Ethernet cable.
2. Connect the power switch cable to the Injector.
3. Connect the power cord to the other end of the power switch cable.
4. Plug the cord into an electrical outlet.
5. Use another Ethernet cable to connect the Injector to the conference phone.

Connect and Power Up a Conference Phone 8832

For PoE-Supported Models

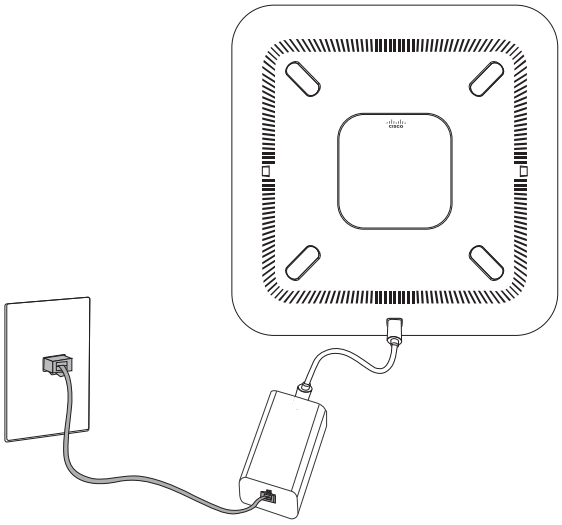

Connect a conference phone with the Ethernet Injector or the Power over Ethernet (PoE) Injector.

For Non-PoE Models

Use one of the following power sources:

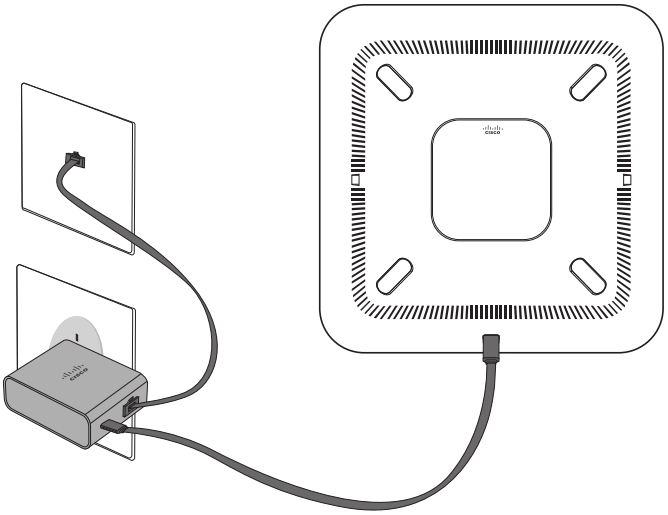

Connect a conference phone with the Ethernet Injector.

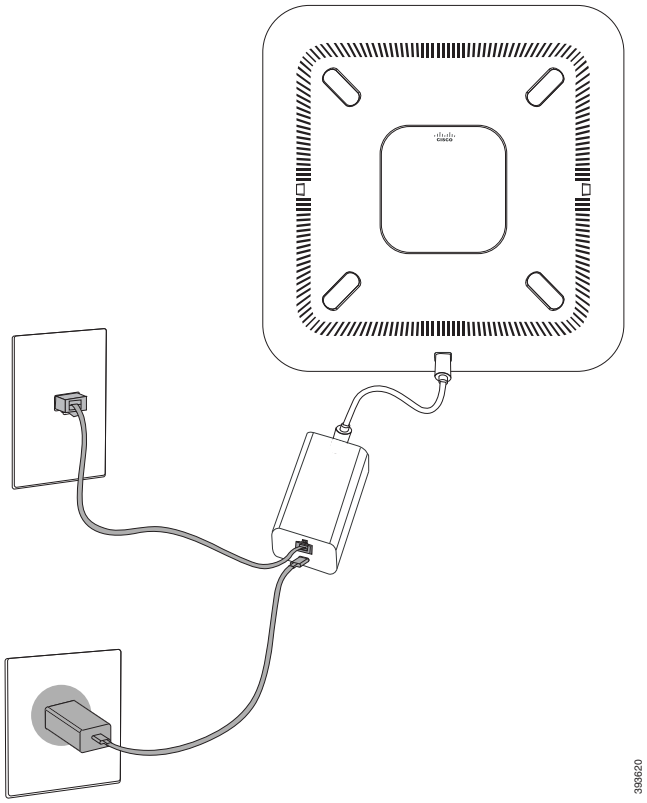

Connect a conference phone with the Non-PoE Ethernet Injector.



CHAPTER 2

Key Expansion Module Installation

Install a Key Expansion Module on Your 6851 Phone 6
Install a Key Expansion Module on 8851, 8861, and 8865 Phones 7

Install a Key Expansion Module on Your 6851 Phone

1

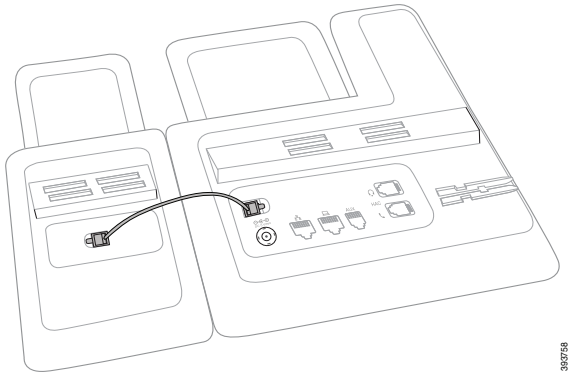

Use the short cable to connect the RJ9 ports on the phone and the key expansion module.

2

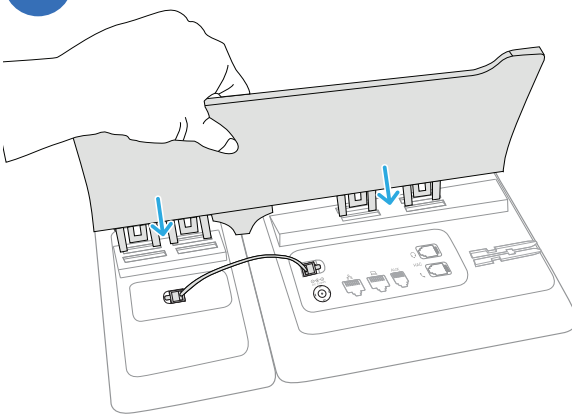

Press the new foot stand firmly in place.

3

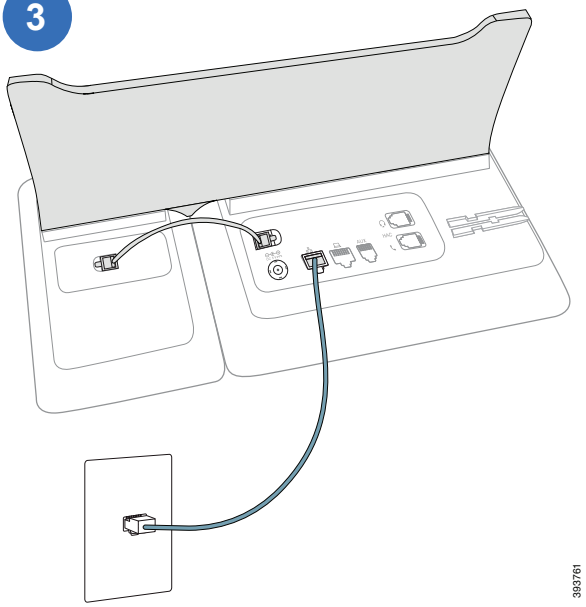

Plug the LAN cable into the phone and into the LAN port.

4

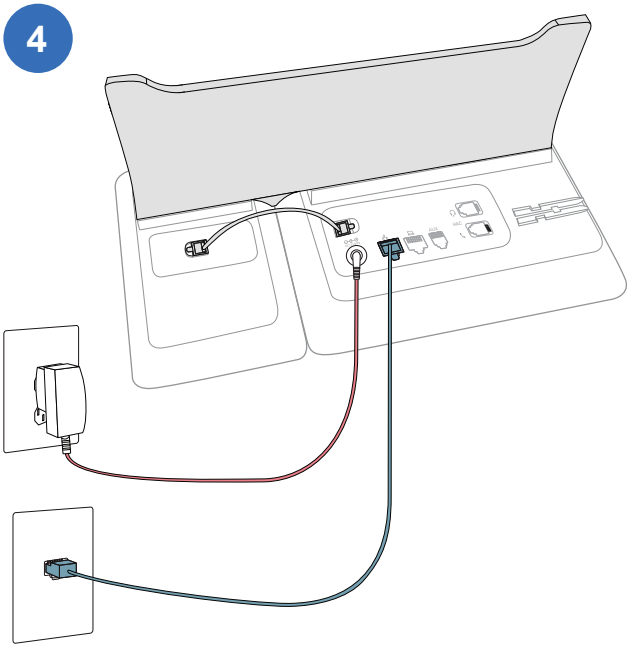

Plug the powder adapter (if used).

The power adapter is optional. 6851 phones support Power over Ethernet (PoE).

Install a Key Expansion Module on 8851, 8861, and 8865 Phones

1

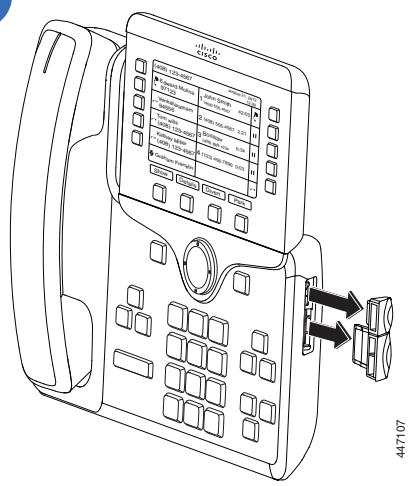

Remove the accessory connector covers.

2

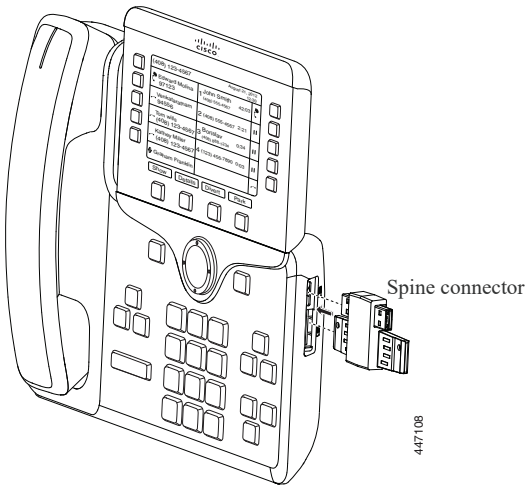

Firmly press the spine connector to the phone.

3

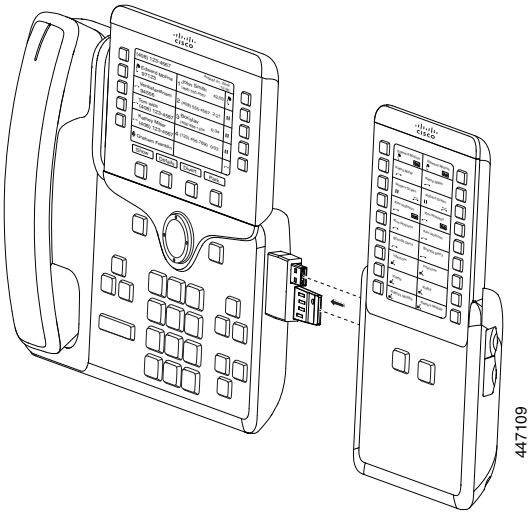

Firmly press the key expansion module into the spine connector.

4

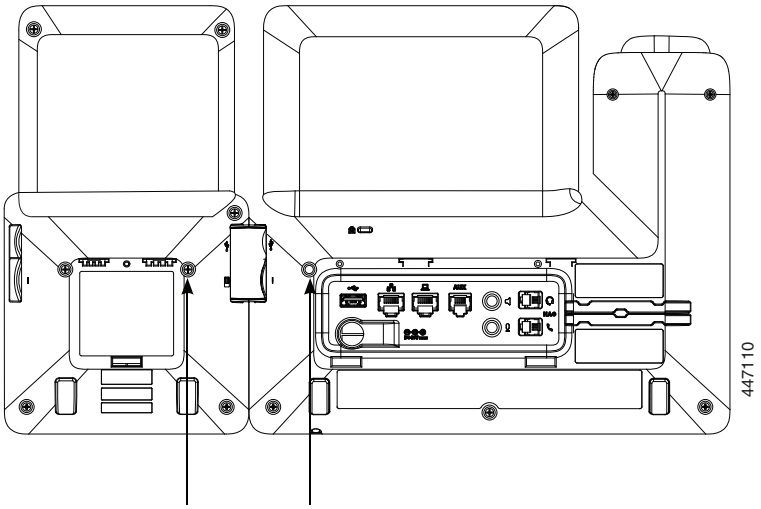

Fasten the screws into the phone.



CHAPTER 3

Connect Headsets

Connect Cisco Headsets 521 and 522 9
Connect Cisco Headsets 561 and 562 10
Connect Cisco Headset 730 12

Connect Cisco Headsets 521 and 522

Cisco Headsets 521 and 522 connect to the USB port on the phone.

Headset 521

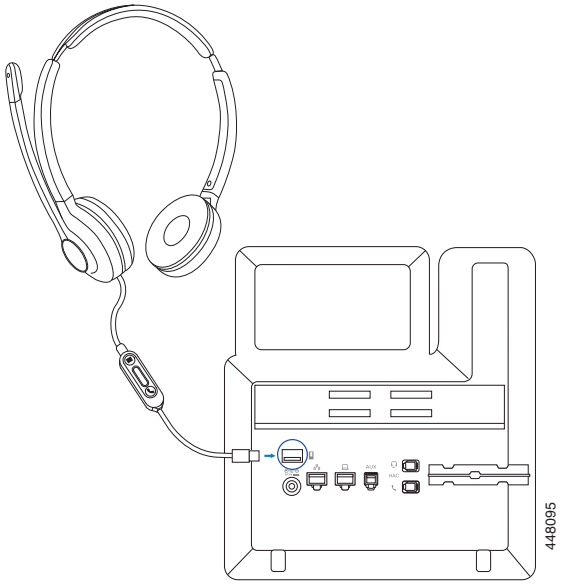

Headset 522

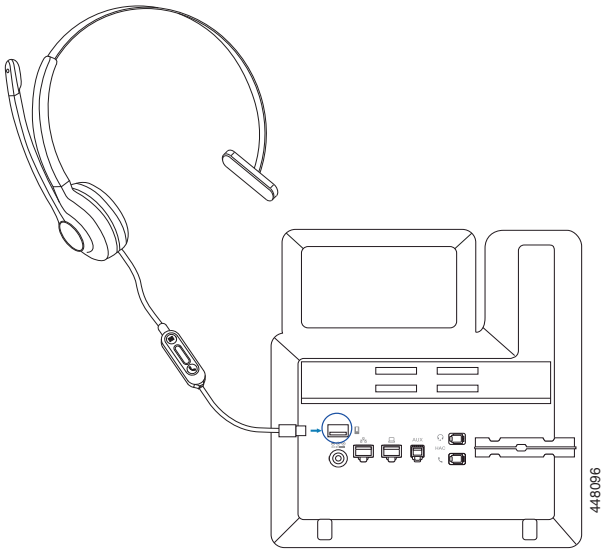

Connect Cisco Headsets 561 and 562

Cisco Headset1 561 and 562

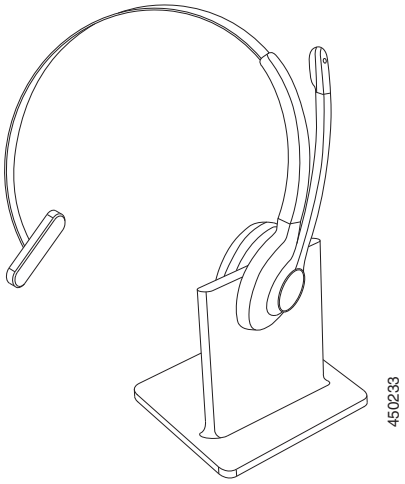

Headset 561 with Standard Base Station

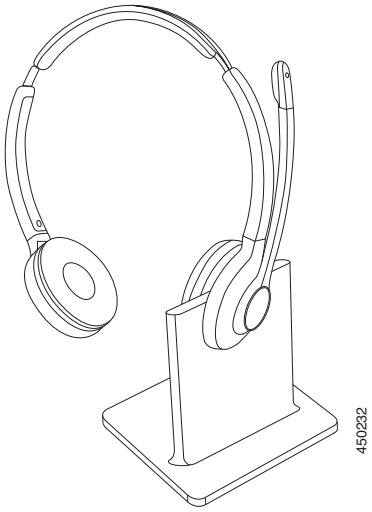

Headset 562 with Standard Base Station

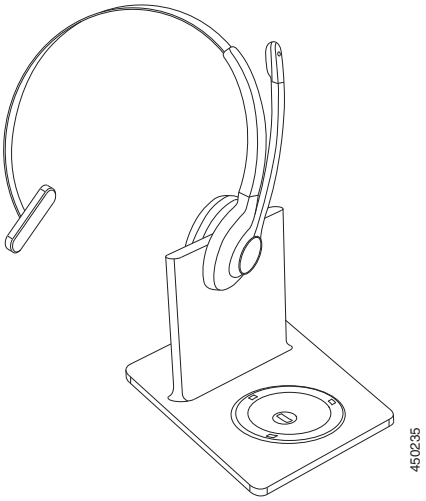

Headset 561 with Multibase Station

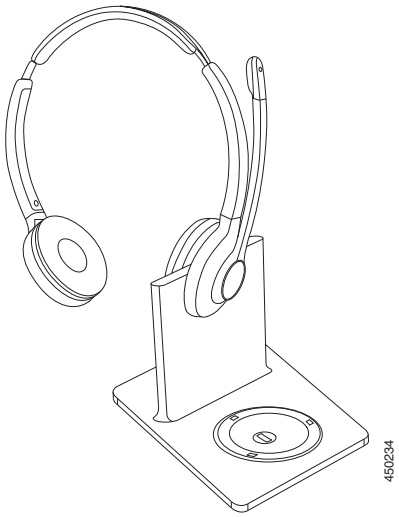

Headset 562 with Multibase Station

Connect the Headset by Y-cable (RJ-9 and AUX connector)

Cisco IP Phones 8811, 8841, 8845, 8851, 8861, 8865, and 6871 support the connection type.

560 Series Standard Base

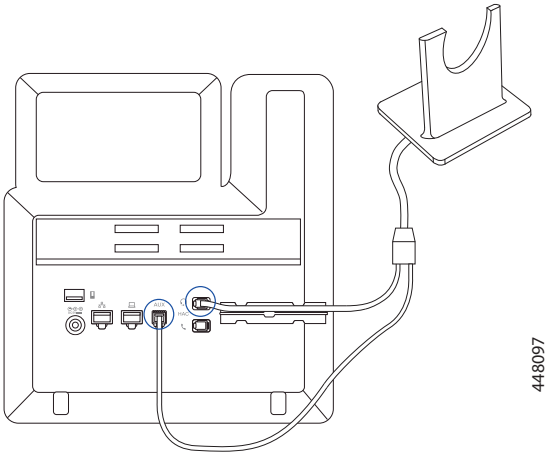

560 Series Multibase

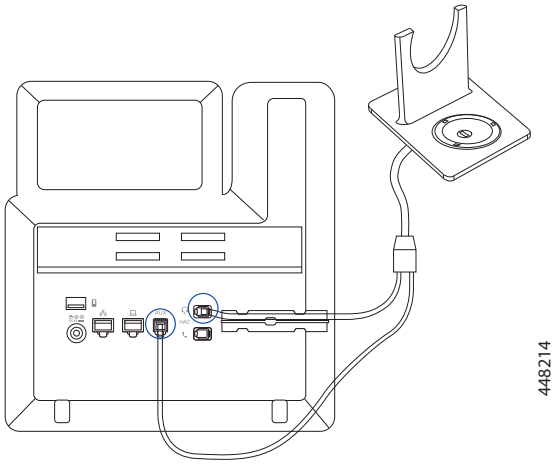

Connect the Headset by USB Connector

Cisco IP Phones 8851, 8861, 8865, and 6871 support the connection type.

560 Series Standard Base

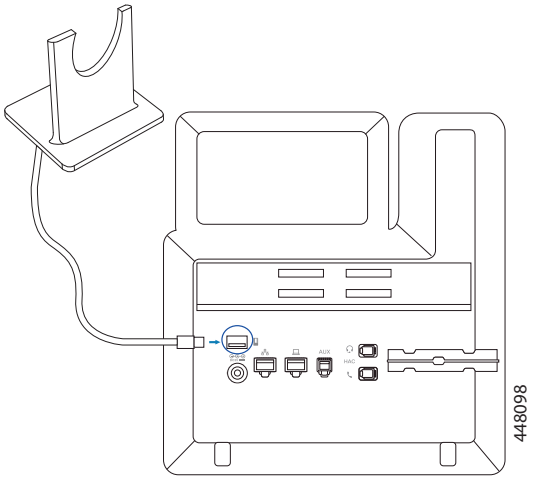

560 Series Multibase

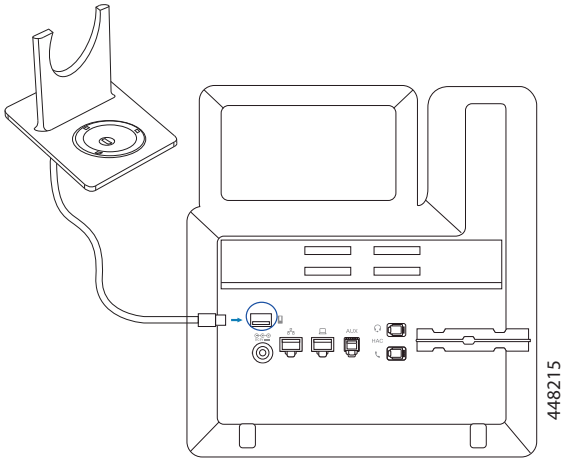

Connect Cisco Headset 730

Connect the Headset by Bluetooth

1

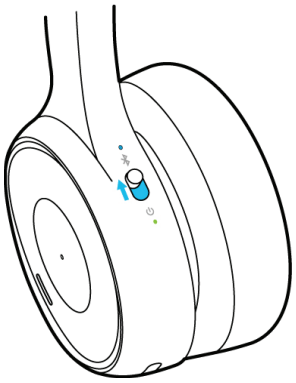

Slide up and hold the Power/Bluetooth switch until the Bluetooth LED blinks.

2 Press **Settings** on your phone, and select **Bluetooth**.

3 Enable Bluetooth on your phone.

4 Add the headset from the device list.

5 (Optional): Set your Bluetooth headset as the preferred headset:
Press **Settings** > **User preferences** > **Audio preferences** > **Preferred audio device** and select **Bluetooth**.

Connect the Headset by USB-C Cable

Cisco IP Conference Phone 8832 supports the connection type.

1

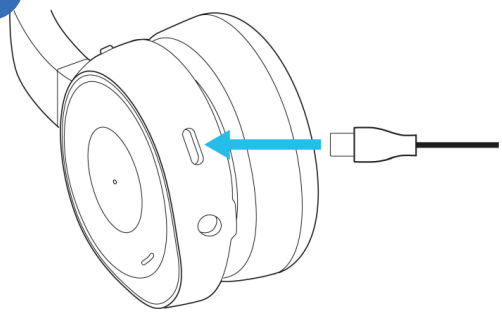

Plug the USB-C cable into the port at the bottom of the left ear cup.

2

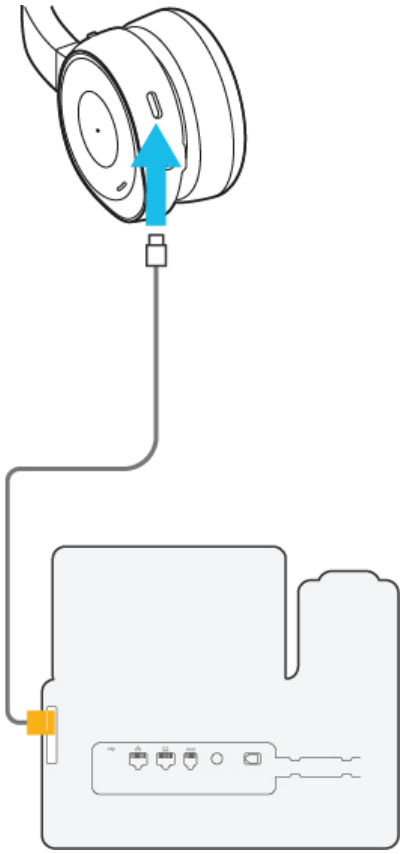

Connect the other end of the cable to your phone.

3

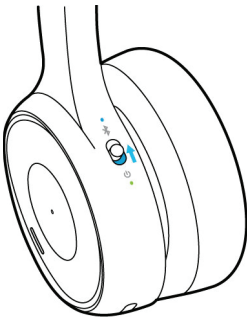

Slide up the Power/Bluetooth switch to turn on the headset.

Connect the Headset by USB Adapter

1

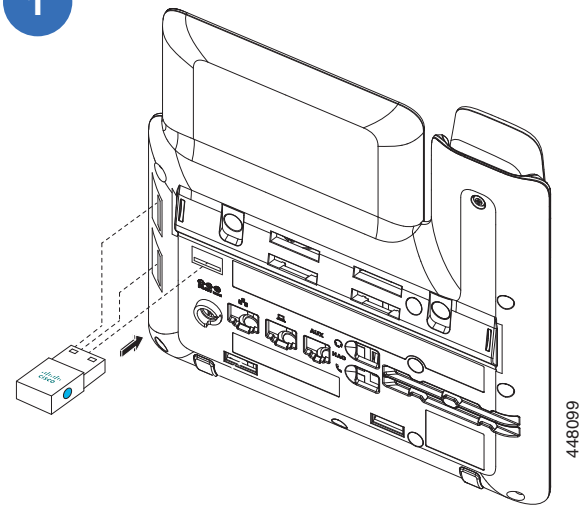

Plug in the USB Adapter to your phone.

2

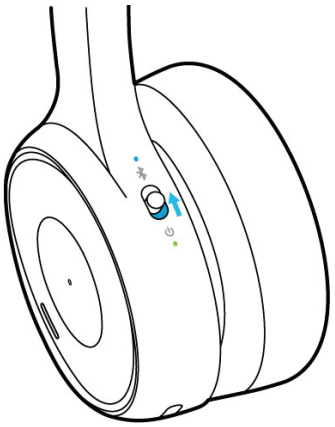

Slide up the Power/Bluetooth switch to turn on the headset.

3

Press  on your phone, and select **Cisco HS USB Adapter** from the Bluetooth device list.



CHAPTER 4

Wall Mount Your Phone

Wall Mount Your 6800 Series Phones 15
- Wall Mount Your 6821 Phone 15
- Wall Mount Your 6841/6851/6861/6871 Phone 16

Wall Mount Your 7800 Series Phones 18
- Wall Mount Your 7811 Phone 18
- Remove a 7811 Phone from the Wall Mount 19
- Wall Mount Your 7821 or 7841 Phone 20
- Remove a 7821 or 7841 Phone from the Wall Mount 21
- Wall Mount Your 7861 Phone 22
- Remove a 7861 Phone from the Wall Mount 23

Wall Mount Your 8800 Series Phones 24
- Remove an 8800 Series Phone from the Wall Mount 25
- Wall Mount Your 8851 or 8861 Phone with a KEM Attached 26
- Remove an 8800 Phone from the Wall Mount 27

Adjust the Handset Rest 28

Wall Mount Your 6800 Series Phones

Most 6800 series phones require a specialized wall mount kit. The exception is the 6821 phone, which you can mount with a commercially-available wall plate.

Wall Mount Your 6821 Phone

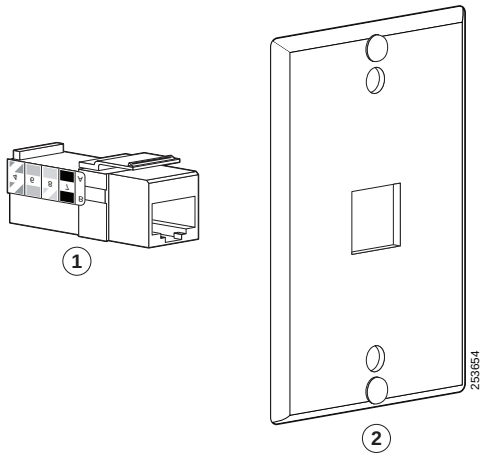

Components:

1. RJ45 connector
2. Leviton Wall Mount Plate

The components are purchased separately. We recommend that you use a Leviton Wall Mount plate (Leviton type number: 4108W-0SP) and follow the manufacturer's instructions to install it on the wall.

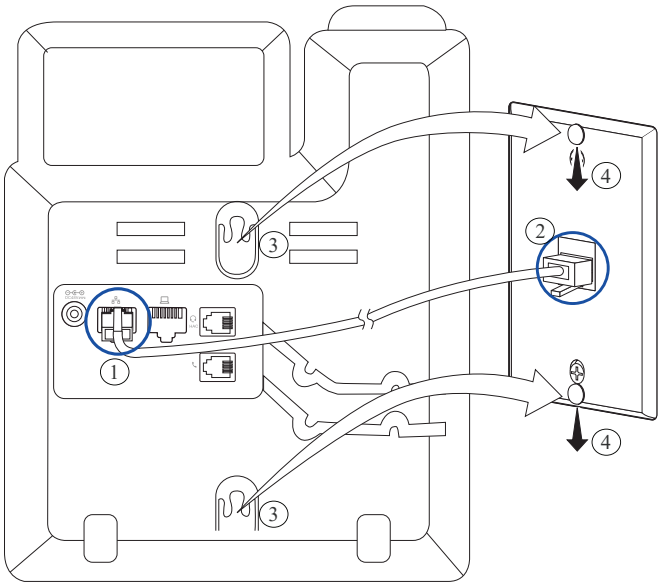

1. Plug the LAN cable (RJ45 connector) into the phone jack.
2. Plug the other end of the LAN cable into the wall mount phone jack.
3. Slip the mounting holes on the phone over the wall mount pins.
4. Firmly slide the phone down into place.

Wall Mount Your 6841/6851/6861/6871 Phone

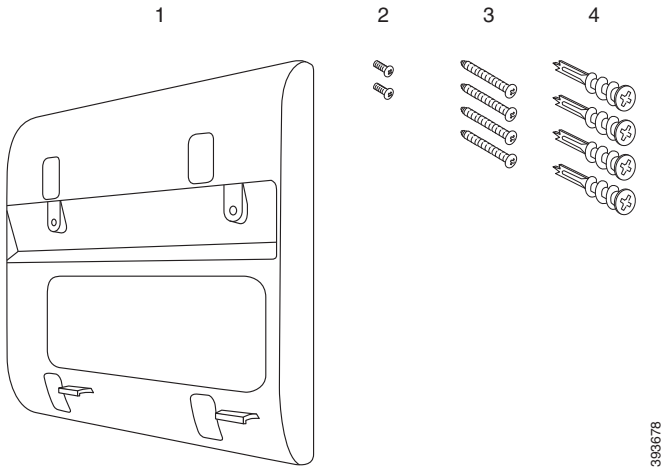

Components:

1. One wall bracket
2. Two M3-7L screws
3. Four M4-25L screws
4. Four drywall anchors

1 Mount the wall bracket in the desired location.

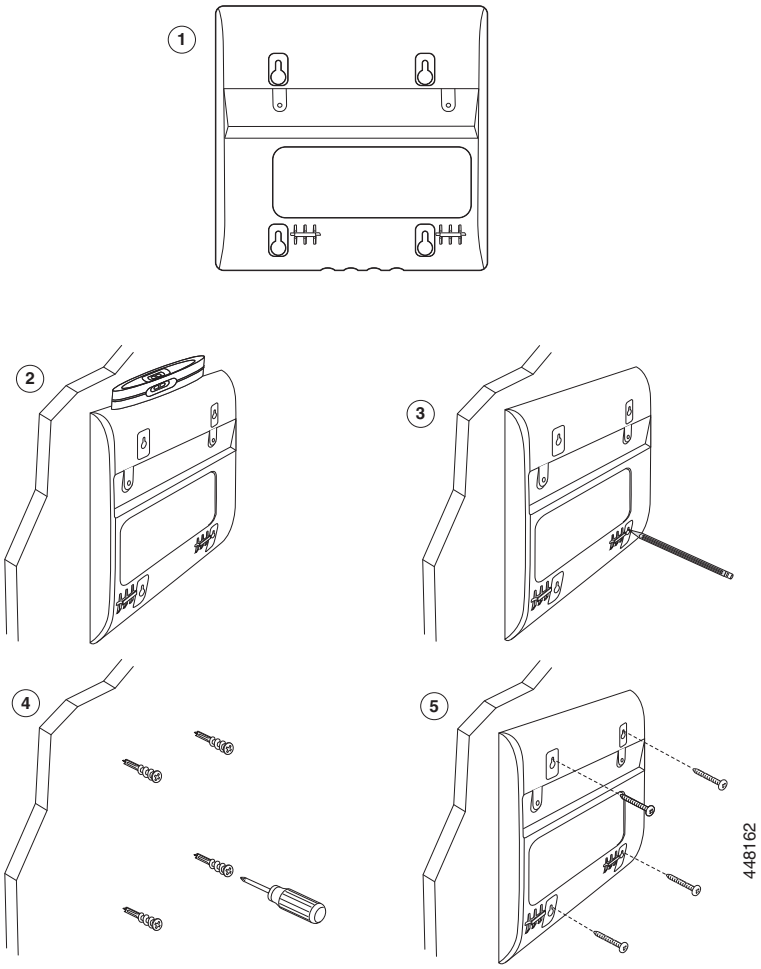

2 Connect the handset and push the cable into the notch.

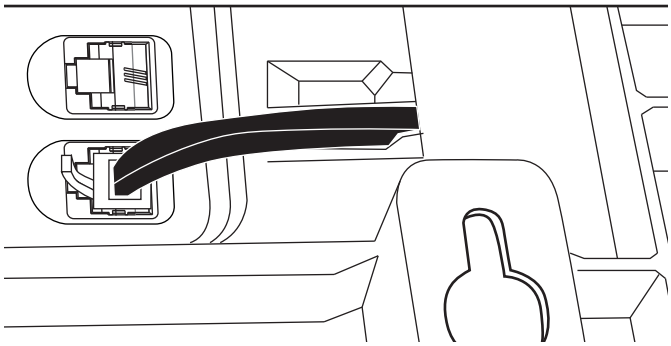

3 Remove the wall bracket from the wall and attach it to the rear panel of the phone.

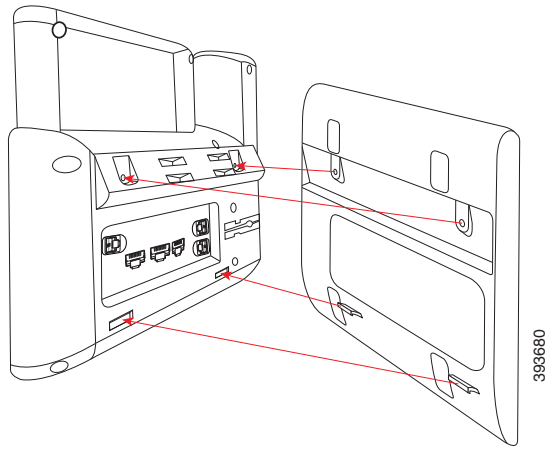

4 Connect the Ethernet cable and the power adapter, and then push the cables into the notches.

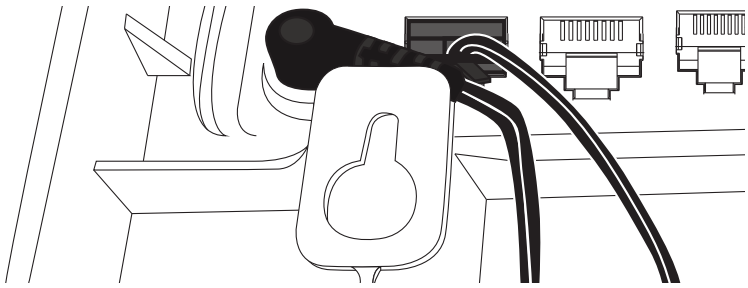

5 Attach the phone and wall bracket assembly to the wall.

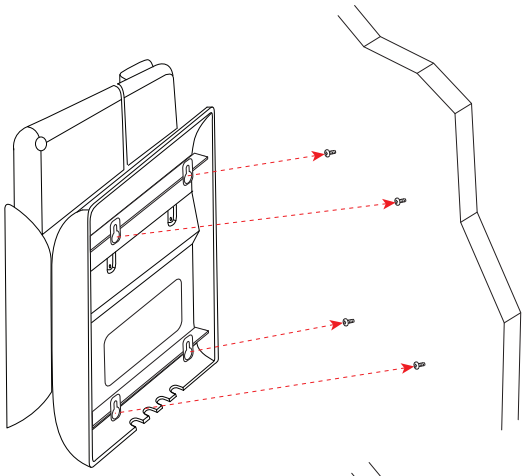

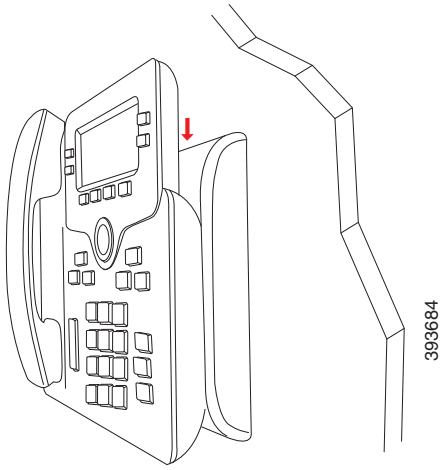

Wall Mount Your 7800 Series Phones

Each wall mount is unique to your phone model and cannot be used for another phone. If you are planning to attach your phone to a wall, purchase the wall mount kit specific to your phone. For additional information, refer to the phone model data sheet.

Wall Mount Your 7811 Phone

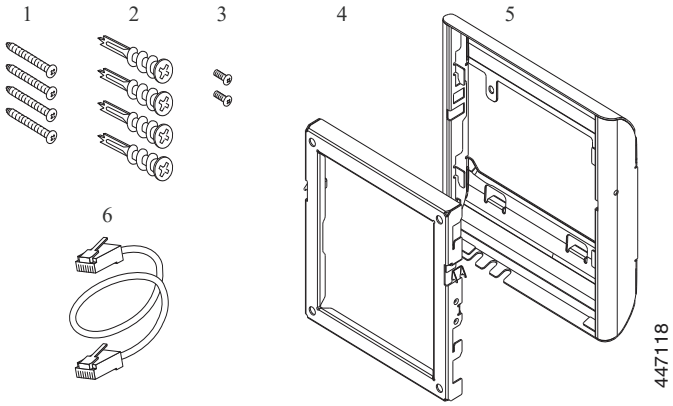

Components:

1. Four M4 x 25-mm Phillips-head screws
2. Four anchors
3. Two M3 x 7-mm Self-tapping screws
4. One wall bracket
5. One phone bracket
6. One 200-mm Ethernet cable

1 Mount the wall bracket in the desired location.

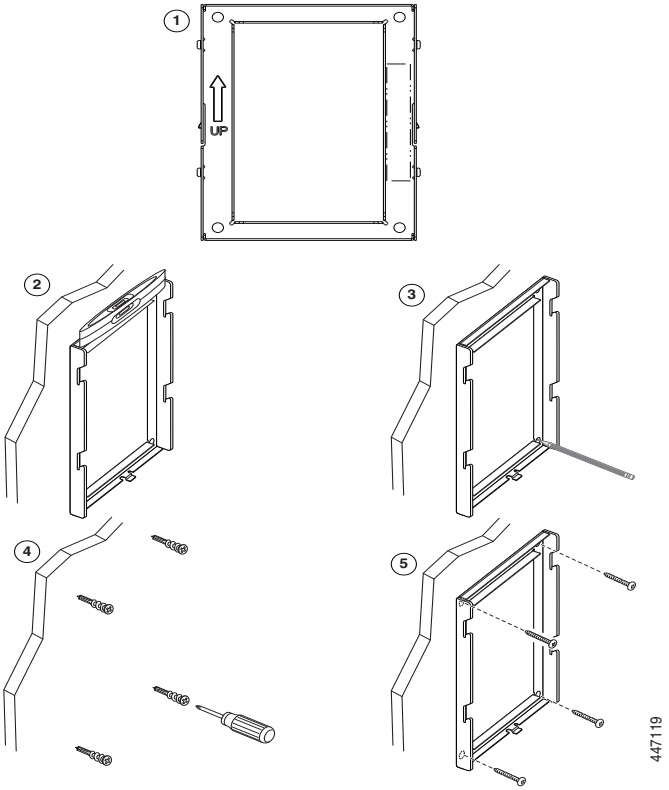

2 Plug in the handset cable, then attach the phone bracket to the rear panel of the phone.

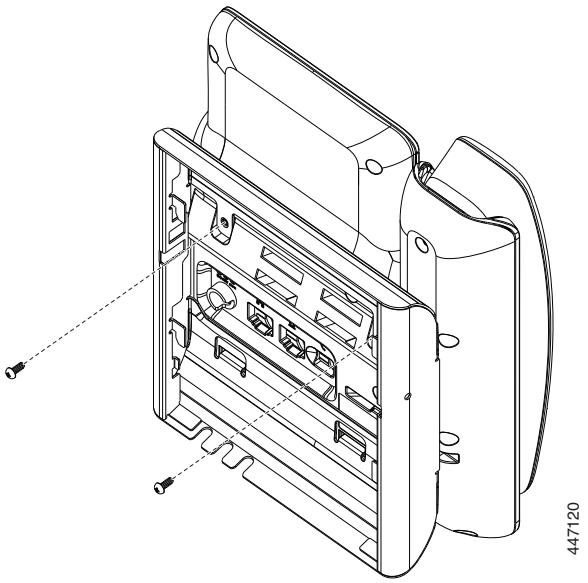

3 Plug in the Ethernet cable, and the power adapter (optional).

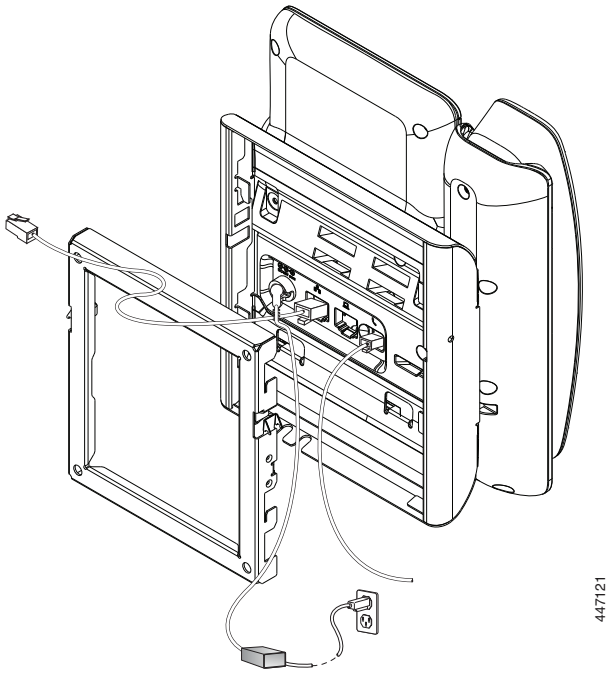

4 Press the phone firmly into the wall bracket and slide the phone down until the tabs in the bracket click into position.

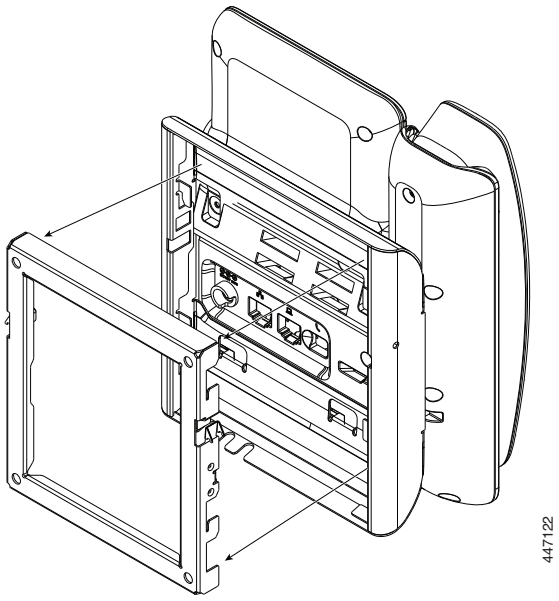

Remove a 7811 Phone from the Wall Mount

1 Use a screw driver or other device to disengage the tabs.

2 Lift the phone to release it from the wall bracket.

3 Pull the phone toward you.

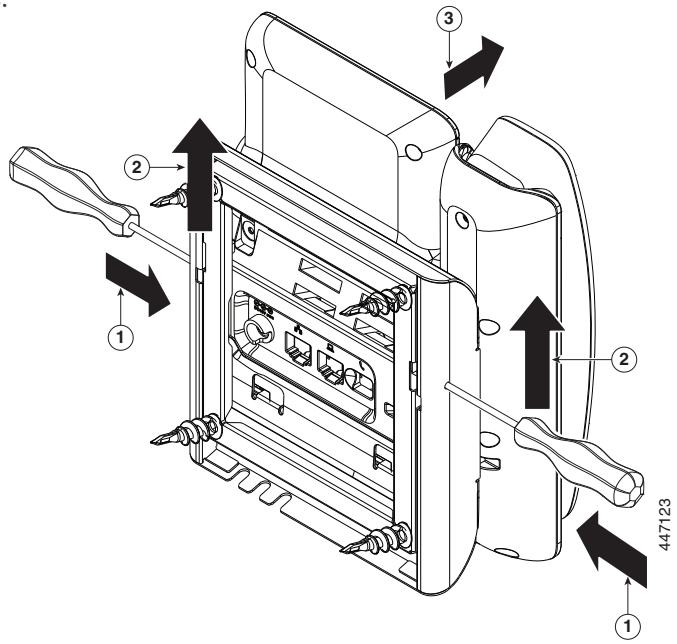

Wall Mount Your 7821 or 7841 Phone

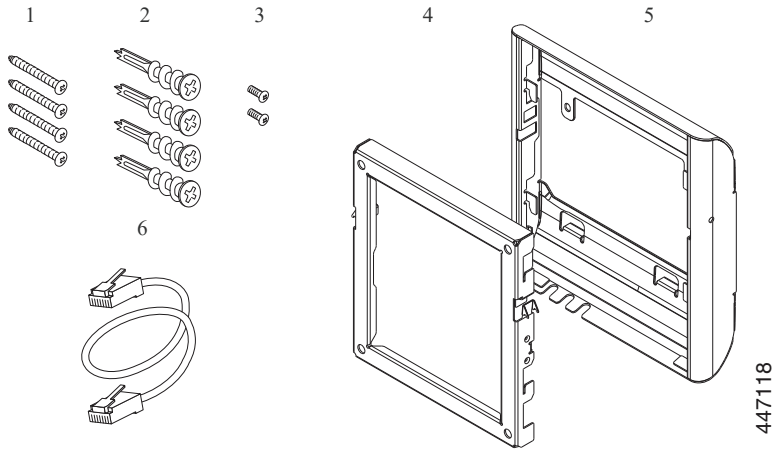

Components:

1. Four M8-18 x 1.25-inch Phillips-head screws
2. Four anchors
3. Two M2.5 x 6-mm machine screws
4. One phone bracket
5. One wall bracket
6. One 6-inch Ethernet cable

1 Mount the wall bracket in the desired location.

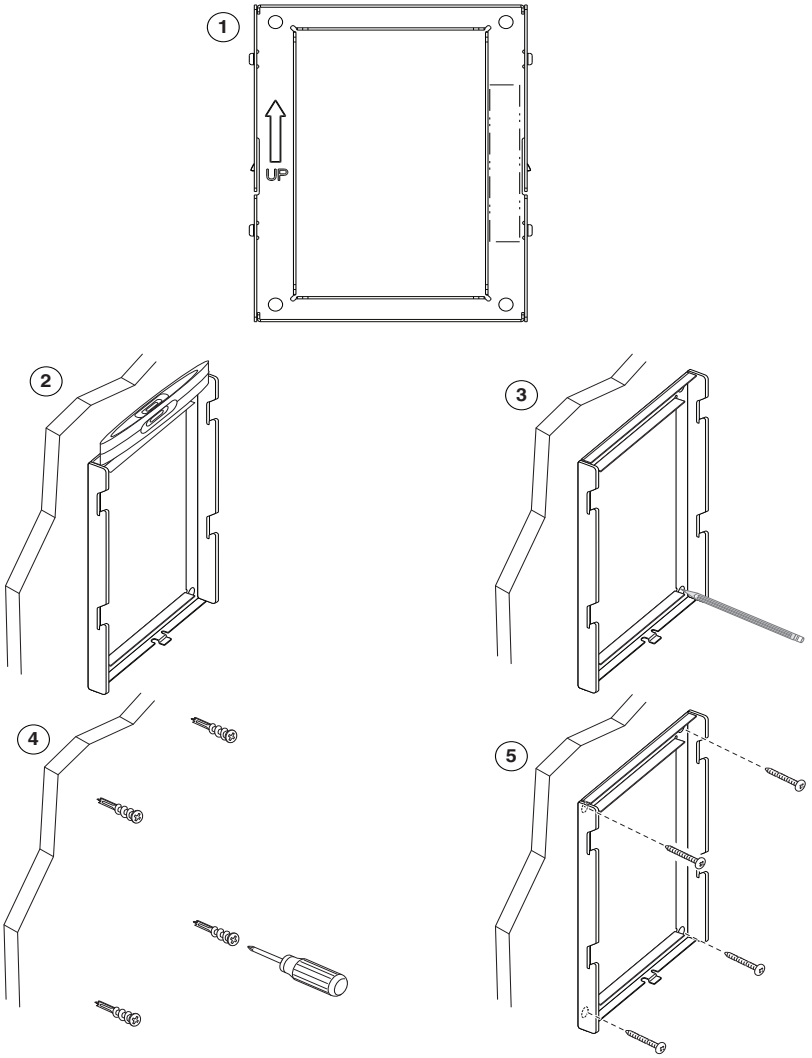

2 Plug in the handset cable, then attach the phone bracket to the rear panel of the phone.

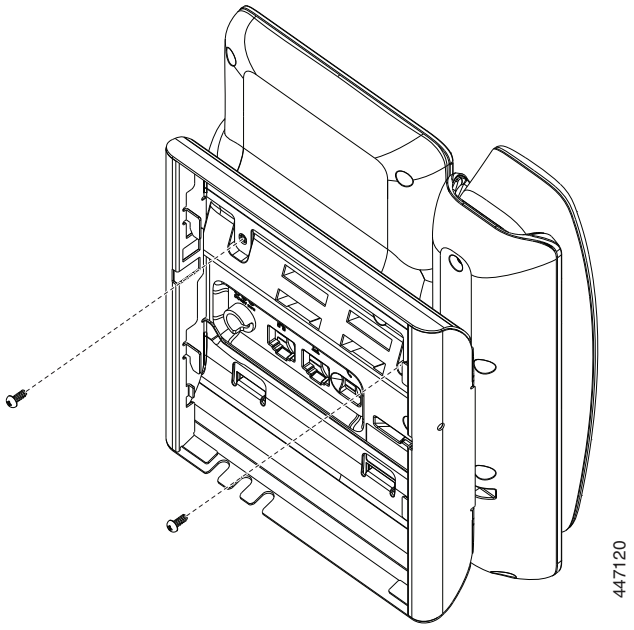

3. Plug in the Ethernet cable, and the power adapter (optional).

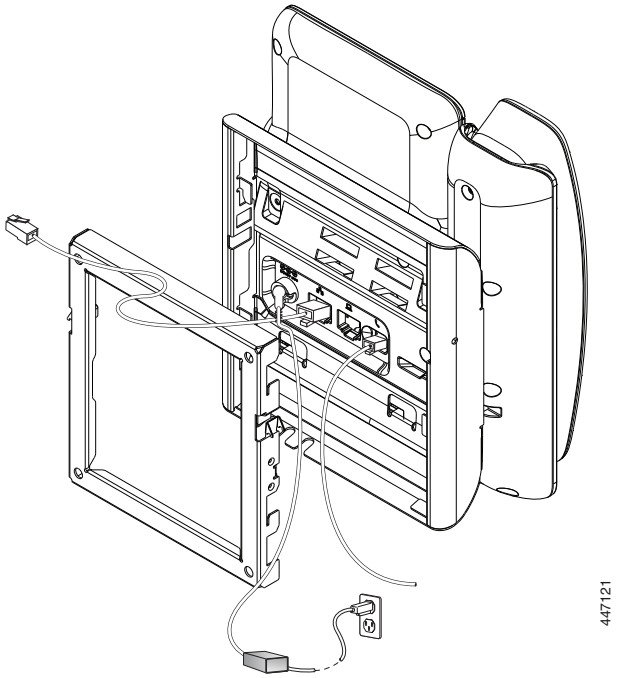

4. Press the phone firmly into the wall bracket and slide the phone down until the tabs in the bracket click into position.

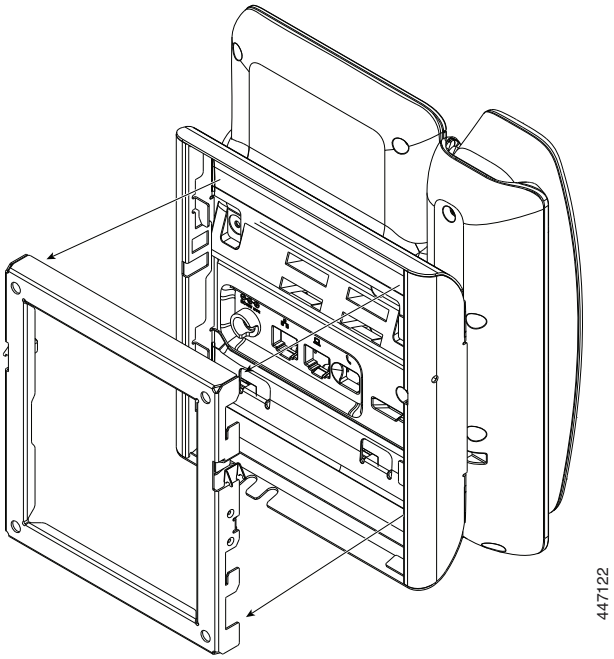

Remove a 7821 or 7841 Phone from the Wall Mount

1. Use a screw driver or other device to disengage the tabs.
2. Lift the phone to release it from the wall bracket.
3. Pull the phone toward you.

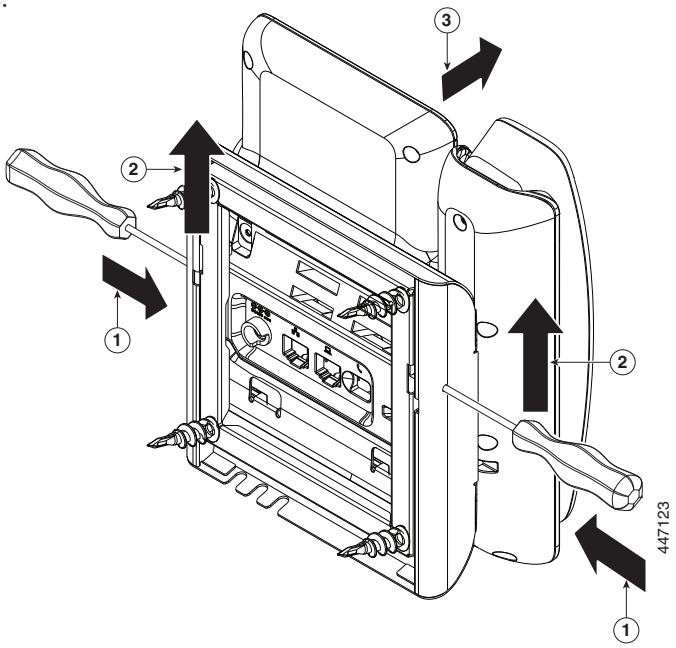

Wall Mount Your 7861 Phone

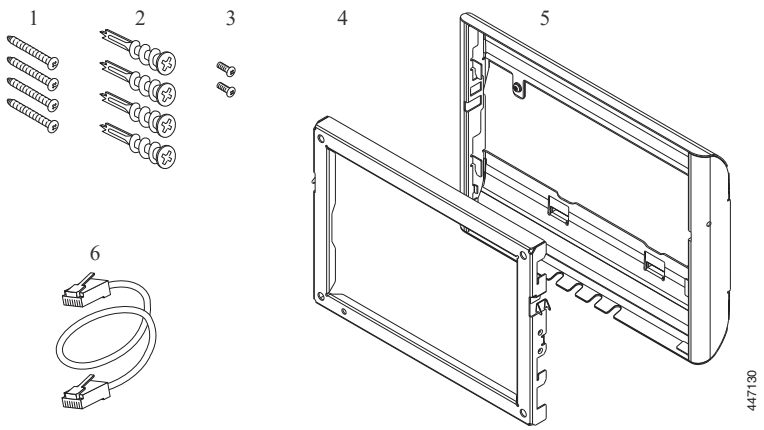

Components:

1. Four M4 x 25-mm Phillips-head screws
2. Four anchors
3. Two M3 x 7-mm Self-tapping screws
4. One wall bracket
5. One phone bracket
6. One 200-mm Ethernet cable

1 Mount the wall bracket in the desired location.

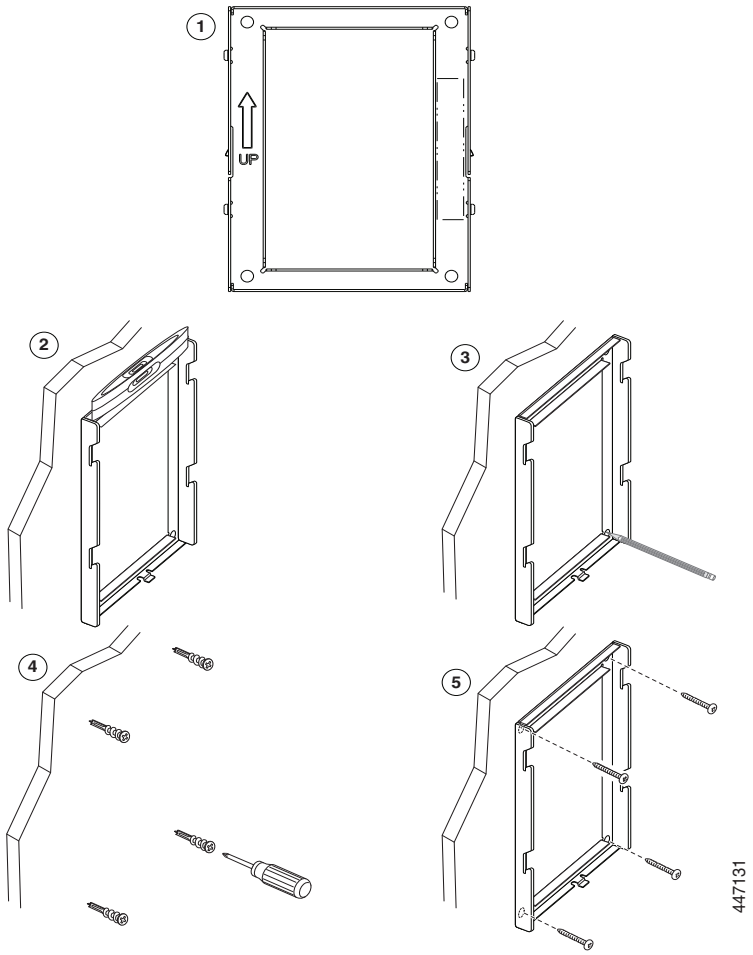

2 Plug in the handset cable, then attach the phone bracket to the rear panel of the phone.

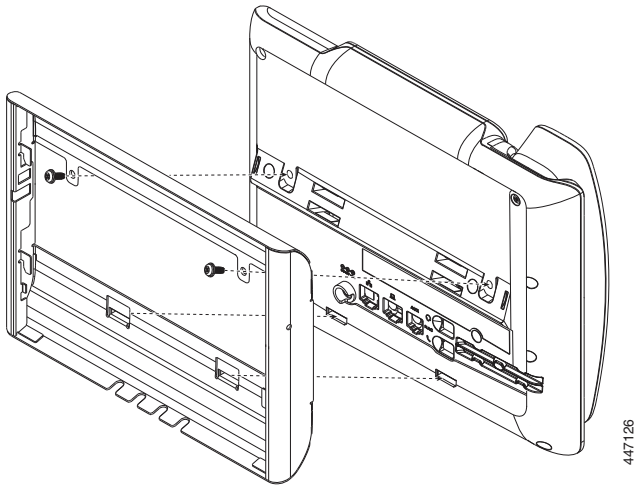

3 Plug in the Ethernet cable, and the power adapter (optional).

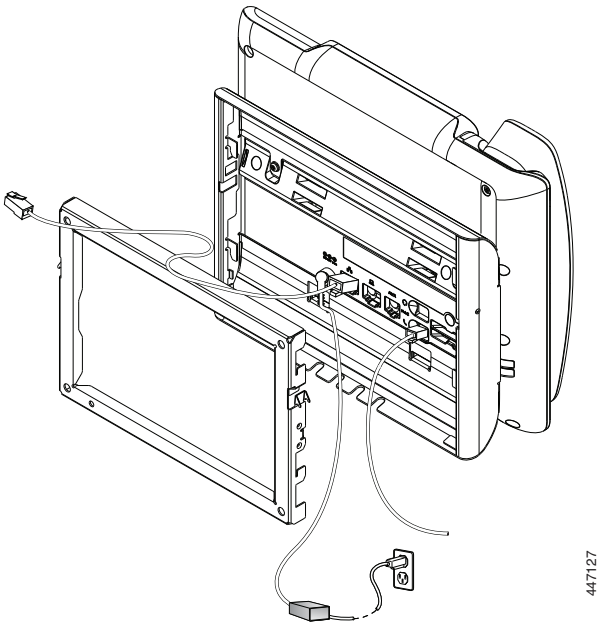

4 Press the phone firmly into the wall bracket and slide the phone down until the tabs in the bracket click into position.

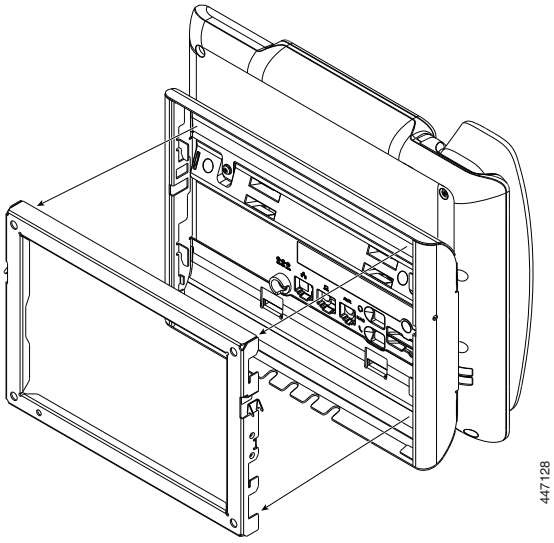

Remove a 7861 Phone from the Wall Mount

1 Use a screw driver or other device to disengage the tabs.

2 Lift the phone to release it from the wall bracket.

3 Pull the phone toward you.

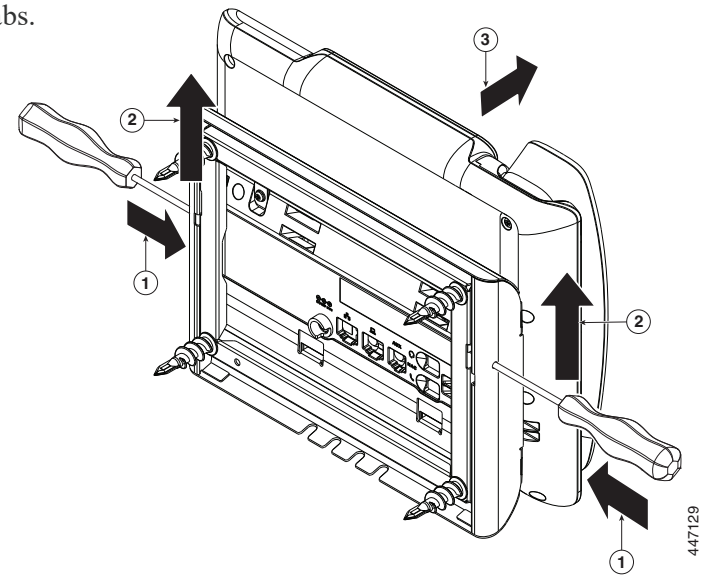

Wall Mount Your 8800 Series Phones

The following wall mount options are available:

- Cisco IP Phone 8800 Series Wall Mount Kit: A nonlockable wall mount kit available for the Cisco IP Phone 8800 Series. This wall kit applies to Cisco IP Phone 8811, 8841, 8851, and 8861. The PID is CP-8800-WMK=.
- Cisco IP Phone 8800 Series Wall Mount Kit with Single KEM: The kit is installed on the Cisco IP Phone 8851 and 8861 with one attached Cisco IP Phone 8800 Key Expansion Module. The PID is CP-8800-BEKEM-WMK=.

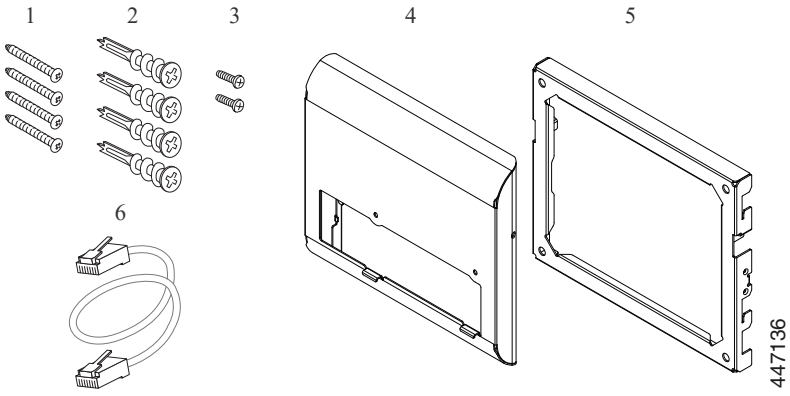

Components:

1. Four #8-18 x 1.25-inch Phillips-head screws
2. Four anchors
3. Two K30x8mm self-tapping screws
4. One phone bracket
5. One wall bracket
6. One 6-inch Ethernet cable

1 Mount the wall bracket in the desired location.

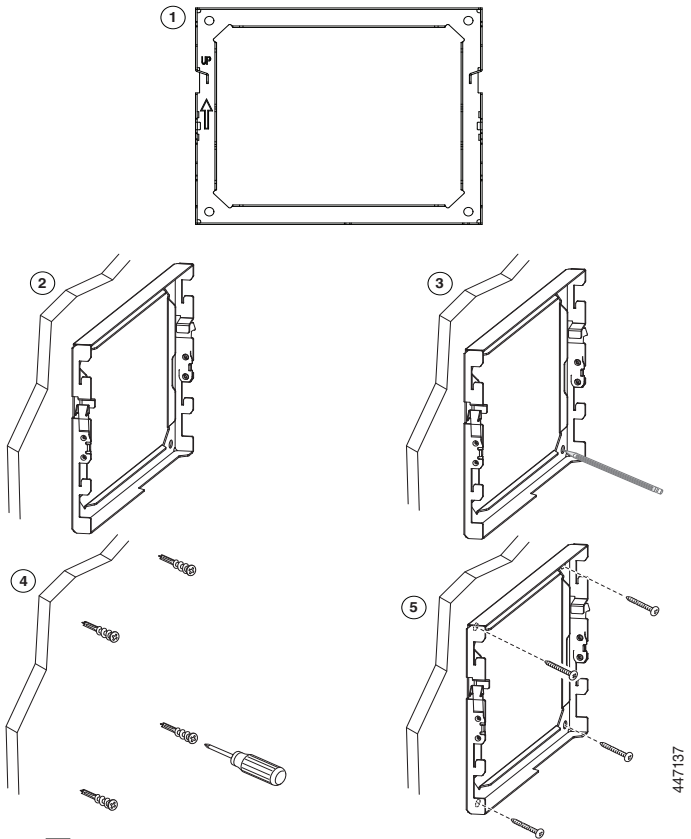

2 Plug in the handset cable, then attach the phone bracket to the rear panel of the phone.

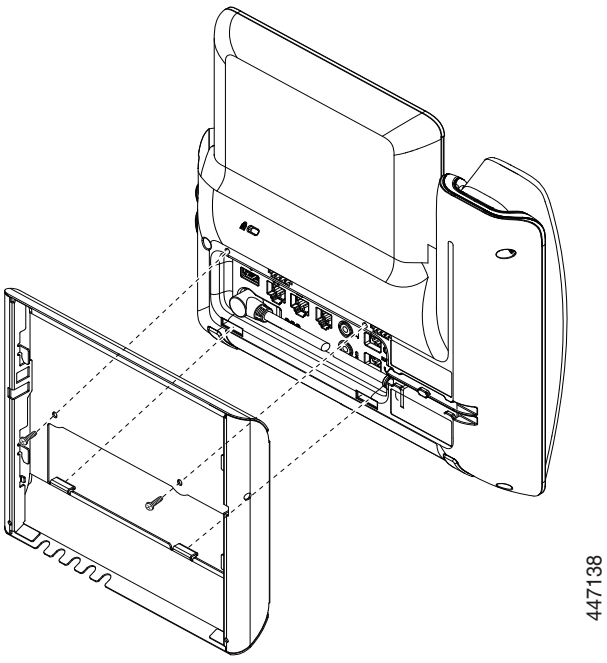

3 Plug in the Ethernet cable, and the power adapter (optional).

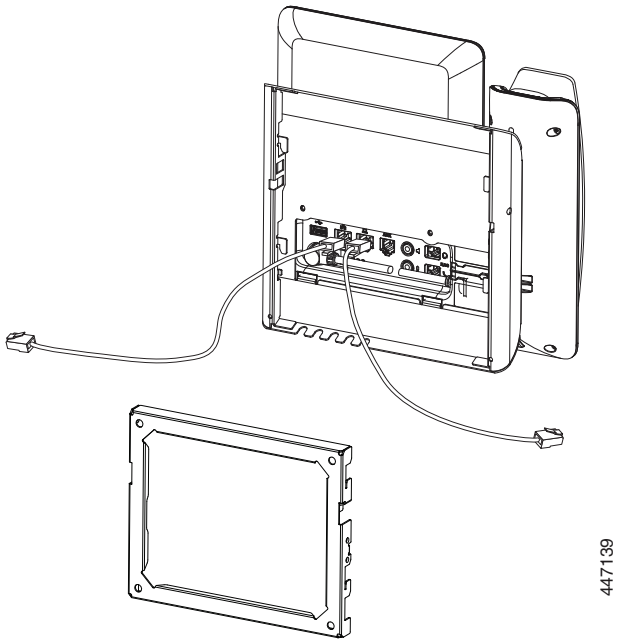

4 Attach the phone to the wall bracket by inserting the tabs of the wall brackets into the slots on the phone bracket.

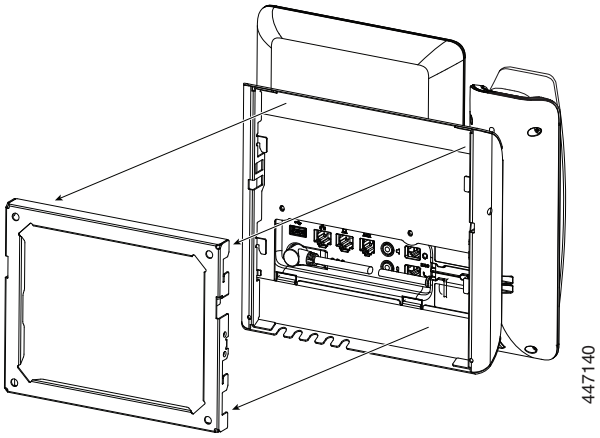

Remove an 8800 Series Phone from the Wall Mount

1 Use a screw driver or other device to disengage the tabs.

2 Lift the phone to release it from the wall bracket.

3 Pull the phone toward you.

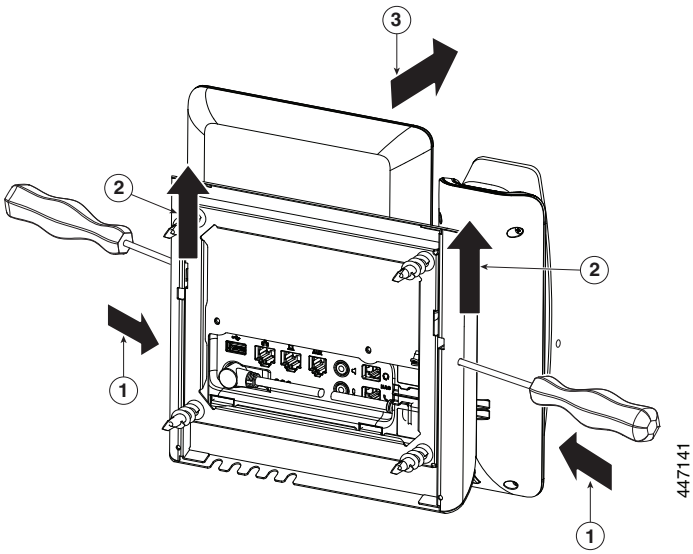

Wall Mount Your 8851 or 8861 Phone with a KEM Attached

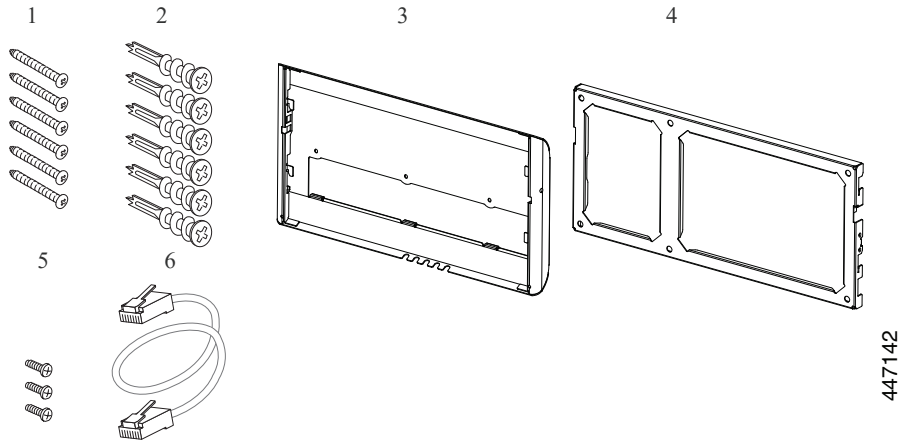

Components:

1. Six #8-18 x 1.25-inch Phillips-head screws with
2. Six anchors
3. One phone bracket
4. One wall bracket
5. Three K30x8mm self-tapping screws
6. One 6-inch Ethernet cable

1 Mount the wall bracket in the desired location.

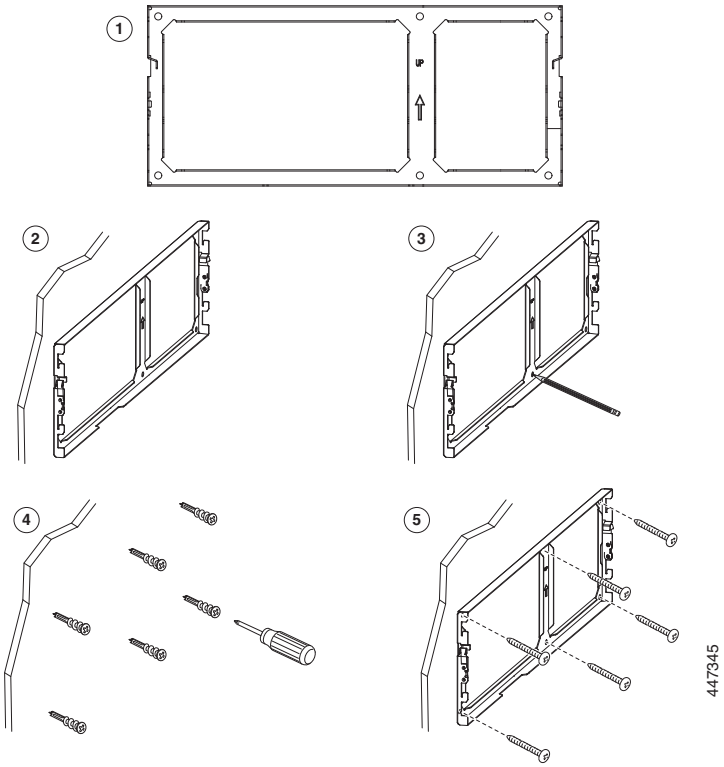

2 Plug in the handset cable, then attach the phone bracket to the rear panel of the phone and KEM assembly.

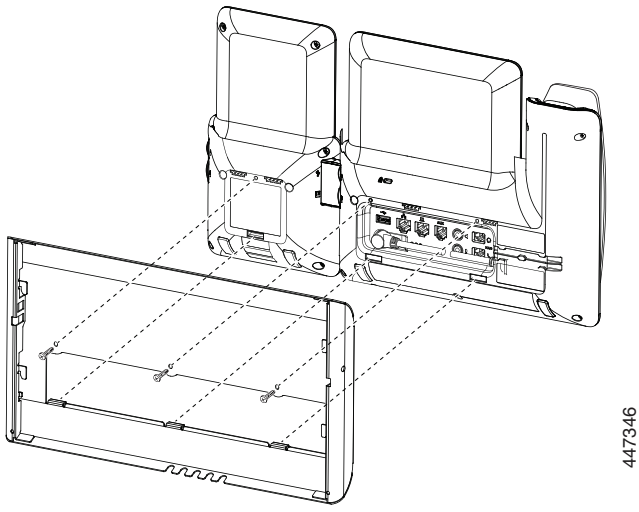

3 Plug in the Ethernet cable, and the power adapter (optional).

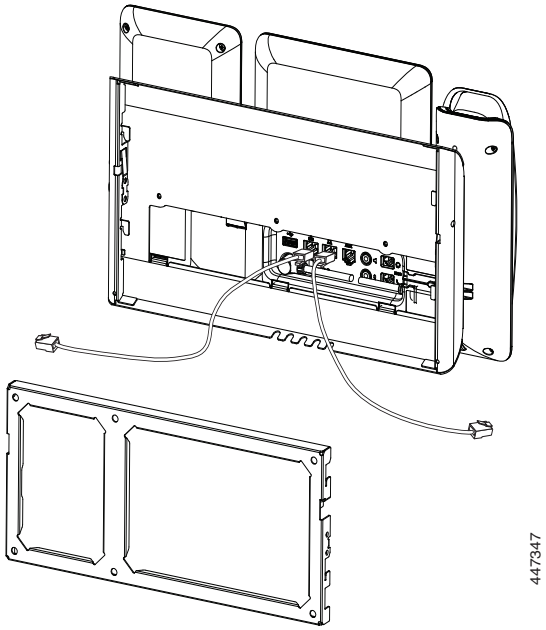

4 Attach the assembly to the wall bracket by inserting the tabs of the wall brackets into the slots on the phone bracket.

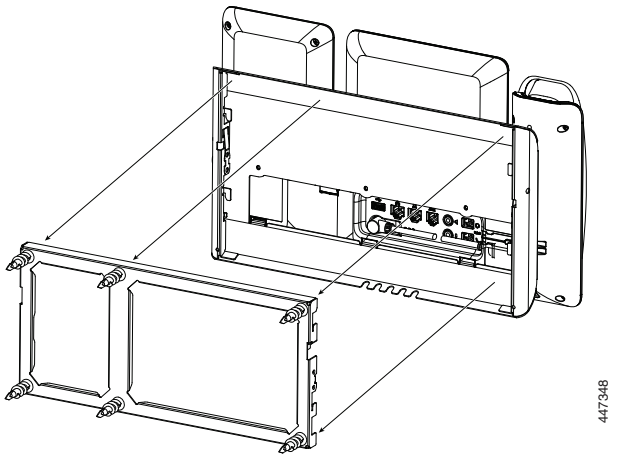

Remove an 8800 Phone from the Wall Mount

1 Use a screw driver or other device to disengage the tabs.

2 Lift the phone to release it from the wall bracket.

3 Pull the phone toward you.

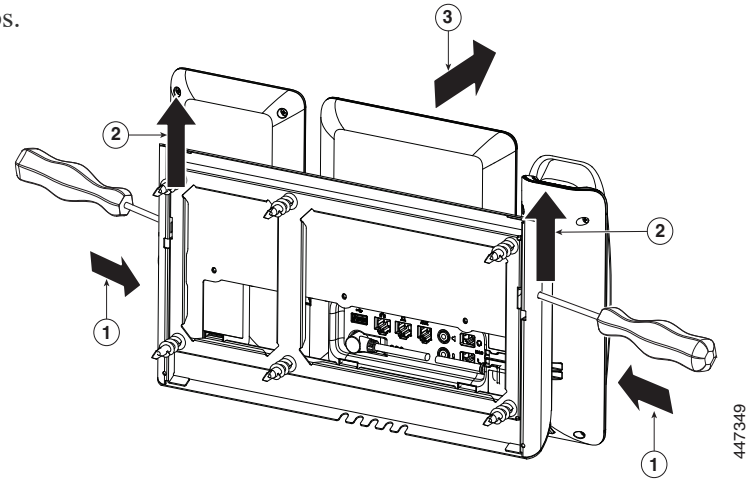

Adjust the Handset Rest

If your phone is wall-mounted or if the handset slips out of the cradle too easily, you may need to adjust the handset rest.

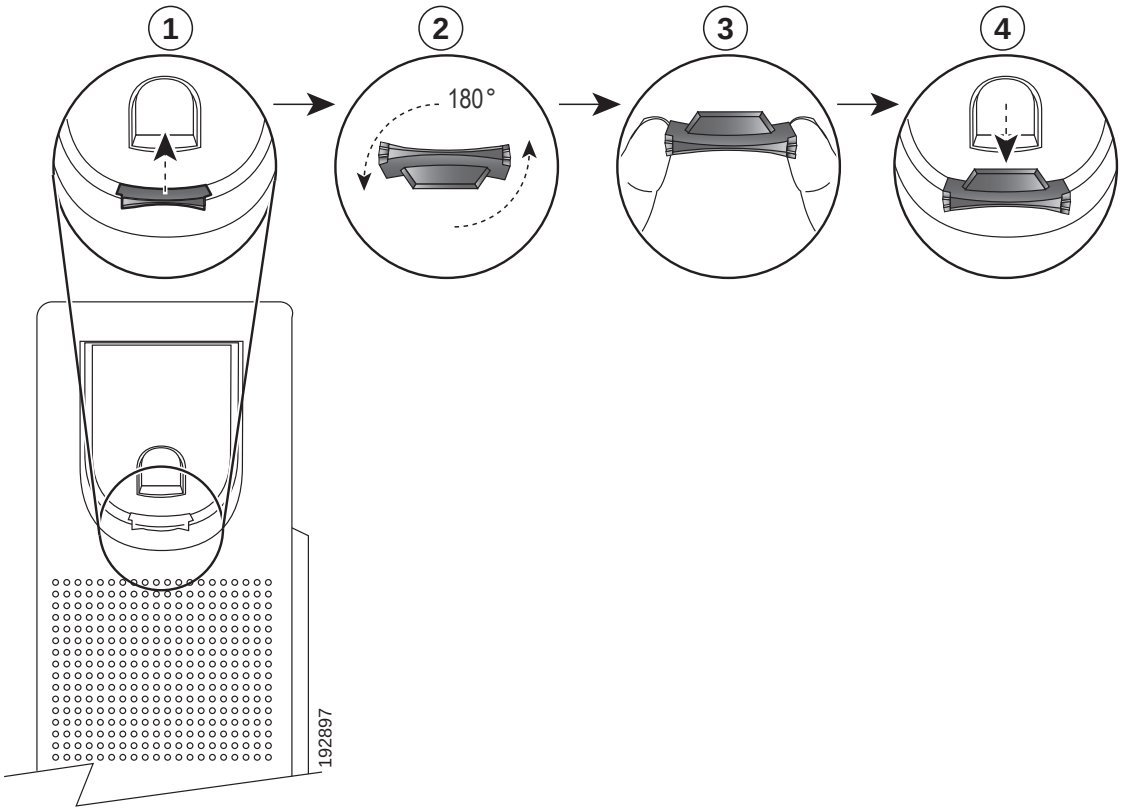



CHAPTER 5

Technical Details

Physical and Operating Environment Specifications 30

Phone Power Requirements 32

- Power Outage 35
- Power Reduction 35
- Power Negotiation Over LLDP 35

Physical and Operating Environment Specifications

The following table shows the physical and operating environment specifications for the Cisco IP Phone with Multiplatform Firmware.

Table 1: *Physical and Operating Specifications*

Specification	Value and Range
Operating temperature	32° to 104°F (0° to 40°C)
Operating relative humidity	Operating: 10% to 90% (non-condensing) Non-operating: 10% to 95% (non-condensing)
Storage temperature	14° to 140°F (–10° to 60°C)
Dimensions (Height * Width * Depth, exclusive of the foot stand)	6821: 8.14 in. (207mm) * 6.73 in. (171 mm) * 1.48 in. (37.5 mm) 6841: 8.14 in. (207mm) * 8.11 in. (206 mm) * 1.30 in. (33 mm) 6851: 8.14 in. (207mm) * 8.11 in. (206 mm) * 1.30 in. (33 mm) 6861: 8.14 in. (207mm) * 8.11 in. (206 mm) * 1.30 in. (33 mm) 6871: 8.14 in. (207mm) * 8.11 in. (206 mm) * 1.30 in. (33 mm) 7811: 8.14 in. (207 mm) * 7.67 in. (195 mm) * 1.1 in. (28 mm) 7821: 8.14 in. (207 mm) * 8.11 in. (206 mm) * 1.1 in. (28 mm) 7832: 8.9 in. (226 mm) * 8.9 in. (226 mm) * 2.14 in. (54.4 mm) 7841: 8.14 in. (207 mm) * 8.11 in. (206 mm) * 1.1 in. (28 mm) 7861: 8.14 in. (207 mm) * 10.42 in. (265 mm) * 1.1 in. (28 mm) 8800 series: 9.02 in. (229.1 mm) * 10.13 in. (257.34 mm) * 1.57 in. (40 mm) 8832: 10.9 in. (278 mm) * 10.9 in. (278 mm) * 2.4 in. (61.3 mm)
Weight (exclusive of the foot stand and the handset)	6821: 1.005 lb. (456 g) 6841: 1.356 lb. (615 g) 6851: 1.365 lb. (602.8 g) 6861: 1.329 lb. (602.8 g) 6871: 1.319 lb. (598 g) 7811: 1.85 lb. (840 g) 7821: 1.91 lb. (867 g) 7832: 2.0 lb. (907 kg) 7841: 1.91 lb. (868 g) 7861: 2.32 lb. (1053 g) 8800 series: 2.62 lb. (1190 g) 8832: 4.07 lb. (1852 g)

Specification	Value and Range
Power for Cisco IP Phones	• When using the AC adapter: ◦ 6800 series: 100-240 VAC, 50-60 Hz, 0.4 A ◦ 7800 series: 100-240 VAC, 50-60 Hz, 0.5 A ◦ 8800 series: 100-240 VAC, 50-60 Hz, 0.5 A • When using the in-line PoE cable: 48 VDC, 0.2 A (6821, 6851, 7800 series and 8800 series)
Power for Cisco IP Conference Phones	• 7832 ◦ IEEE PoE Class 2. The phone is compatible with both IEEE 802.3af and 802.3at switch blades and supports both Cisco Discovery Protocol and Link Layer Discovery Protocol - Power over Ethernet (LLDP-PoE) ◦ If the connected LAN switches don't support PoE, an additional PoE power injector will be needed to convert AC wall power to provide PoE • 8832 ◦ IEEE PoE Class 3 via a PoE injector. The phone is compatible with both IEEE 802.3af and 802.3at switch blades and supports both Cisco Discovery Protocol and Link Layer Discovery Protocol - Power over Ethernet (LLDP-PoE). ◦ Other options include a non-PoE Ethernet injector if the connected LAN switches don't support PoE. For Wi-Fi deployment, a Cisco IP Conference Phone 8832 Power Adapter is needed.
Supported Ethernet Cables	• 6800 series ◦ Category 3/5/5e/6 for 10-Mbps cables with 4 pairs ◦ Category 5/5e/6 for 100-Mbps cables with 4 pairs ◦ Category 5/5e/6 for 1000-Mbps cables with 4 pairs (not for 6821 and 6861) • 7800 series ◦ Category 3/5/5e/6 for 10-Mbps cables with 4 pairs ◦ Category 5/5e/6 for 100-Mbps cables with 4 pairs ◦ Category 5/5e/6 for 1000-Mbps cables with 4 pairs (for 7841 only) • 8800 series ◦ Category 3/5/5e/6 for 10-Mbps cables with 4 pairs ◦ Category 5/5e/6 for 100-Mbps cables with 4 pairs ◦ Category 5e/6 for 1000-Mbps cables with 4 pairs • 7832 ◦ Category 3/5/5e/6 for 10-Mpbs cables with 4 pairs ◦ Category 5/5e/6 for 100-Mbps cables with 4 pairs • 8832: USB-C cable **Note:** Cables have 4 pairs of wires for a total of 8 conductors
Distance requirements	As supported by the Ethernet Specification, the maximum cable length between each Cisco IP Phone and the switch is assumed to be 330 feet (100 meters).

Phone Power Requirements

You can power the Cisco IP Phone with external power or with Power over Ethernet (PoE). A separate power supply provides external power. The switch can provide PoE through the phone Ethernet cable. For more information on your phone's power requirements, consult your phone's data sheet.

When you install a phone that is powered with external power, connect the power supply before you connect the Ethernet cable to the phone. When you remove a phone that is powered with external power, disconnect the Ethernet cable from the phone before you disconnect the power supply.

Table 1: *Guidelines for Cisco IP Phone 6800 Series Power*

Power Type	Guidelines
External power: Provided through the external power supply	The 6800 series phones use a custom power supply.
External power—Provided through the Cisco IP Phone Power Injector connected to the 6841 and 6861 phones.	The Cisco IP Phone Power Injector may be used with the phones. Functioning as a midspan device, the injector delivers inline power to the attached phone. The Cisco IP Phone Power Injector connects between a switch port and the phone, and supports a maximum cable length of 100 m between the unpowered switch and the phone.
PoE power—Provided by a switch through the Ethernet cable attached to the 6821, 6851, and 6871 phones.	To ensure uninterruptible operation of the phone, make sure that the switch has a backup power supply. Make sure that the Cat OS or IOS version that runs on your switch supports your intended phone deployment. See the documentation for your switch for operating system version information.

Table 2: *Guidelines for Cisco IP Phone 7800 Series Power*

Power Type	Guidelines
External power: Provided through the CP-PWR-CUBE-3= external power supply	The Cisco IP Phone uses the CP-PWR-CUBE-3 power supply.
External power—Provided through the Cisco IP Phone Power Injector	The Cisco IP Phone Power Injector may be used with most Cisco IP Phones. The phone datasheet identifies if the phone can use the power injector. Functioning as a midspan device, the injector delivers inline power to the attached phone. The Cisco IP Phone Power Injector connects between a switch port and the phone, and supports a maximum cable length of 100m between the unpowered switch and the phone.
PoE power—Provided by a switch through the Ethernet cable attached to the phone.	To ensure uninterruptible operation of the phone, make sure that the switch has a backup power supply. Make sure that the Cat OS or IOS version that runs on your switch supports your intended phone deployment. See the documentation for your switch for operating system version information.

Table 3: *Guidelines for Cisco IP Phone 8800 Series Power*

Power Type	Guidelines
External power: Provided through the CP-PWR-CUBE-4= external power supply	The Cisco IP Phone 8800 Series phones use the CP-PWR-CUBE-4 power supply.
PoE power—Provided by a switch through the Ethernet cable attached to the phone.	Cisco IP Phones 8851, 8861, and 8865 support 802.3at PoE for accessory use. For more information, consult your phone's data sheet. Cisco IP Phones 8861 and 8865 are PoE Class 4 devices and require a switch or line card with Class 4 capabilities to support extra features. The switch requires a backup power supply for uninterruptible operation of the phone. Make sure that the Cat OS or IOS version that runs on your switch supports your intended phone deployment. See the documentation for your switch for operating system version information.
Universal Power over Ethernet (UPoE)	Cisco IP Phones 8865 support UPoE.

Table 4: *Guidelines for Cisco IP Conference Phone 7832 Power*

Power Type	Guidelines
PoE power—Provided by a switch through the Ethernet cable attached to the phone.	To ensure uninterruptible operation of the phone, make sure that the switch has a backup power supply. Make sure that the CatOS or IOS version that runs on your switch supports your intended phone deployment. See the documentation for your switch for operating system version information.
External power—Provided through the Cisco IP Conference Phone 7832 PoE Midspan Cable and Cisco Power Cube 3	The midspan cable and power cube provide power to the Ethernet cable. When you install a phone that is powered with the midspan adapter, connect the adapter to power before you connect the Ethernet cable to the phone. When you remove a phone that uses the midspan adapter, disconnect the Ethernet cable from the phone before you remove the power from the adapter.
External power—Provided through the Cisco IP Phone Power Injector	The power injector provides power to the Ethernet cable. When you install a phone that is powered with the power injector, connect the injector to power before you connect the Ethernet cable to the phone. When you remove a phone that uses the injector, disconnect the Ethernet cable from the phone before you remove the power from the injector.

Table 5: *Guidelines for Cisco IP Conference Phone 8832 Power*

Power Type	Guidelines
PoE power—Provided by either the Cisco IP Conference Phone 8832 PoE Injector or Cisco IP Conference Phone 8832 Ethernet injector through the USB-C cable attached to the phone.	If you are using either the Cisco IP Conference Phone 8832 PoE Injector or Cisco IP Conference Phone 8832 Ethernet Injector, make sure that the switch has a backup power supply to ensure uninterruptible operation of the phone. Ensure that the CatOS or IOS version that runs on your switch supports your intended phone deployment. See the documentation for your switch for operating system version information. When you install a phone that is powered by PoE, connect the injector to the LAN before you connect the USB-C cable to the phone. When you remove a phone that uses PoE, disconnect the USB-C cable from the phone before you remove the power from the adapter.
External power • Non-PoE Ethernet deployment with a Cisco IP Conference Phone 8832 Non-PoE Ethernet Injector • Wi-Fi deployment with a Cisco IP Conference Phone 8832 Power Adapter • Non-PoE Ethernet deployment with a Cisco IP Conference Phone 8832 Ethernet Injector and a Cisco IP Conference Phone 8832 Power Adapter	When you install a phone that is powered with external power, connect the injector to power and to the Ethernet before you connect the USB-C cable to the phone. When you remove a phone that uses external power, disconnect the USB-C cable from the phone before you remove the power from the adapter.

See the following documents for more information about the products or solutions with Cisco IP Phones:

- Cisco switches that work with Cisco IP Phones
  https://www.cisco.com/c/en/us/products/switches/index.html
- Cisco IOS releases that support bidirectional power negotiation
  https://www.cisco.com/c/en/us/solutions/enterprise-networks/upoe/index.html
- Other requirements and restrictions about power
  http://www.cisco.com/c/en/us/solutions/enterprise-networks/power-over-ethernet-solutions/index.html
  https://www.cisco.com/c/en/us/products/routers/index.html

Power Outage

Your access to emergency service through the phone requires that the phone receive power. If a power interruption occurs, service or emergency calling service dialing does not function until power is restored. If a power failure or disruption occurs, you may need to reset or reconfigure the equipment before you can use service or emergency calling service dialing.

Power Reduction

You can reduce the amount of energy that the Cisco IP Phone consumes by using Power Save mode.

In Power Save mode, the backlight on the screen is not lit when the phone is not in use. The phone remains in Power Save mode until the user lifts the handset or presses any button. Set up each phone to enable or disable Power Save settings.

Note

Cisco IP Phones 6821 and 7811 and Cisco IP Conference Phones 7832 and 8832 don't support Power Save Mode.

Power Negotiation Over LLDP

The phone and the switch negotiate the power that the phone consumes. Cisco IP Phones operate at multiple power settings, which lowers power consumption when less power is available.

After a phone reboots, the switch locks to one protocol (CDP or LLDP) for power negotiation. The switch locks to the first protocol (containing a power Threshold Limit Value [TLV]) that the phone transmits. If the system administrator disables that protocol on the phone, the phone cannot power up any accessories because the switch does not respond to power requests in the other protocol.

We recommend that you always enable Power Negotiation (default) when connecting to a switch that supports power negotiation.

If Power Negotiation is disabled, the switch may disconnect power to the phone. If the switch does not support power negotiation, disable the Power Negotiation feature before you power up accessories over PoE. When the Power Negotiation feature is disabled, the phone can power accessories up to the maximum that the IEEE 802.3af-2003 standard allows.

Note

- When CDP and Power Negotiation are disabled, the phone can power accessories up to 15.4W.
- Cisco IP Phones 6841 and 6861 don't support the Power Negotiation over LLDP feature.