CHIHUAHUA ST

PRO Series Antennas



The Chihuahua ST PRO Series antenna is a 2X2 MIMO cellular, up to 3X3 MIMO Wi-Fi, omni-directional antenna with optional GPS. The Chihuahua ST is designed for high performance of 600 MHz to 2.7 GHz frequencies for industrial IoT, mobile, and enterprise network solutions.

This PRO Series, IP67 rated antenna has a compact and durable design to withstand high vibration and shock while performing at high efficiency for applications such as construction fleets and industrial IoT.

Patent Pending

TAA Compliant

100% TESTED parsec ANTENNAS MADE IN AMERICA

Configurations 1:1 | 2:1 | 3:1 | 4:1 | 5:1 | 6:1

Industrial IoT | Mobile Broadband

Vibration & Shock Resistant

Built Rugged for High Impact

High Speed Data

Fast Enough for Remote Video Monitoring

Waterproof

IP67 Rated with Watertight Gaskets

- UP TO 2X2 MIMO CELLULAR
- UP TO 3x3 MIMO Wi-Fi
- OPTIONAL GPS
- OMNI-DIRECTIONAL
- 600 MHz – 2700 MHz
- 3.8 inch x 3.26 inch
- Wi-Fi 6 COMPATIBLE

sales @parsec-t.com www.parsec-t.com 972-804-4600

Specifications

Frequencies			
4G/5G Cellular	698-960 MHz 1710-2700 MHz	Wi-Fi	2400-2483.5 MHz 4900-5900 MHz
4G/5G Bands			
North America	B2, B4, B5, B7, B12, B13, B14, B17, B25, B26, B30, B41, B66 n2, n5, n12, n25, n26, n41, n66		
EMEA	B1, B3, B7, B20, B28 n1, n3, n28		
Mechanical		**Environmental**	
Dimension	3.8 inch x 3.26 inch	Operating Temperature	-30 °C to 85°C OR -22 °F to 180°F
Mounting	Single 1 inch	Ingress Protection	IP67

Dimensions

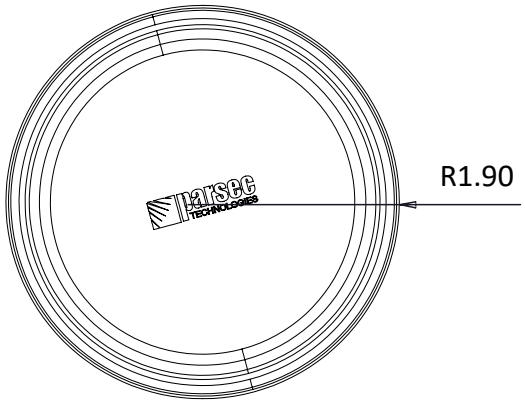

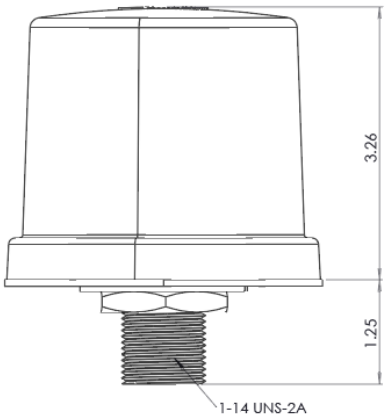

Hardware Accessories Included

PTA0316-316

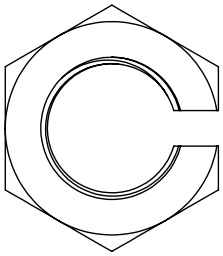

PTA0318-316

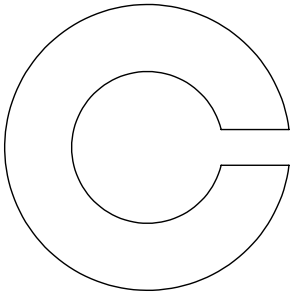

Product Images





Electrical Specifications

ID & Unit	Port	Parameters	Typ.
Radiated Efficiency (%)	CELL	698-960 MHz	70
	CELL	1710-2700 MHz	70
	GPS	1575.42 MHz	80
	Wi-Fi	2400-2483.5 MHz	70
	Wi-Fi	4900-5900 MHz	70
Peak Gain (dBi)	CELL	698-960 MHz	3.7
	CELL	1710-2700 MHz	4.9
	GPS	1575.42 MHz	6
	Wi-Fi	2400-2483.5 MHz	2.2
	Wi-Fi	4900-5900 MHz	4.5
Return Loss 50Ω (dB)	CELL	698-960 MHz	8
	CELL	1710-2700 MHz	8
	GPS	1575.42 MHz	12
	Wi-Fi	2400-2483.5 MHz	16
	Wi-Fi	4900-5900 MHz	8
Isolation	CELL	698-960 MHz	8.5
	CELL	1710-2700 MHz	11
	Wi-Fi	2400-2483.5 MHz	15
	Wi-Fi	4900-5900 MHz	15
Polarization	CELL, Wi-Fi		Linear
Max Input Power (Watts)	CELL, Wi-Fi		5
RF Connectors	CELL		SMA(M)

parsec ANTENNAS

	Wi-Fi		RPSMA(M)
RF Cable Type	CELL, Wi-Fi		LSR200

- Electrical Specifications based on antenna with a 2 ft x 2 ft external ground plane.
- Isolation, return loss, and peak gain do not include cable loss.
- SMA connectors have a max torque of 3-5 inch lbs.
- NF connectors have a max torque of 6.2–9.7 inch lbs.
- Parsec is currently phasing out inventory with LTE on our Cellular cables (now labeled CELL). For cables labeled LTE, please refer port "CELL" in the data sheets and installation instructions.

GNSS Electrical Specifications

ID & Unit	Port	Parameters	Typ.
Antenna + Preamp Gain (dBic)	GPS	1570-1581 MHz	33
Polarization	GPS		RHCP
Filter Rejection (dB)	GPS	1625 MHz	12
GNSS Preamp Voltage (mA)	GPS		2.2 to 5
GNSS Preamp Current (mA)	GPS		5 to 15
RF Connector	GPS		SMA(M)
RF Cable Type	GPS		LSR100

Part Number Key

Part number example of a 6:1 Chihuahua ST antenna, black: PRO6ST2L3WG15B

Description	Abbreviation	Part Number
All PRO Series	PRO	PRO
Number of Antennas in Housing/Configuration	6:1	PRO6
Antenna Abbreviation for Chihuahua ST	ST	PRO6ST
Number of CELL Elements	#L	PRO6ST2L
Number of Wi-Fi Elements	#W	PRO6ST2L3W
Number of GPS Elements (usually only 1 GPS per antenna, therefore we simply list G and no number)	G	PRO6ST2L3WG
Cable Length Measured in Feet: 01=1', 15=15'	01, 15, etc.,	PRO6ST2L3WG15
Radome Color – B for Black, W for White	B or W	PRO6ST2L3WG15B
If SMA Connector, Simply Leave Blank		PRO6ST2L3WG15B
Additional Options		
N Type Female Connector	-NF	PRO6ST2L3WG01B-NF
Custom connectors and cable kits are available. Please contact us for more information at sales@parsec-t.com.		

Ordering

Standard Antennas

Config.	Part Number	Description
2:1	PRO2ST2L06B	2 Cellular, 6 ft Cable, Black
3:1	PRO3ST2LG06B	2 Cellular, GPS, 6 ft Cable, Black

Non-Standard Antennas

Config.	Part Number	Description
1:1	PRO1STL01B	1 Cellular, 1 ft Cable, Black
	PRO1STL01W	1 Cellular, 1 ft Cable, White
	PRO1STL06B	1 Cellular, 6 ft Cable, Black
	PRO1STL06W	1 Cellular, 6 ft Cable, White
2:1	PRO2ST2L01B	2 Cellular, 1 ft Cable, Black
	PRO2ST2L01W	2 Cellular, 1 ft Cable, White
	PRO2ST2L06W	2 Cellular, 6 ft Cable, Black
3:1	PRO3ST2LG01B	2 Cellular, GPS, 1 ft Cable, Black
	PRO3ST2LG01W	2 Cellular, GPS, 1 ft Cable, White
	PRO3ST2LG06W	2 Cellular, GPS, 6 ft Cable, White
	PRO3ST2LG15B	2 Cellular, GPS, 15 ft Cable, Black
4:1	PRO4ST2L2W01B	2 Cellular, 2 Wi-Fi, 1 ft Cable, Black
	PRO4ST2L2W01W	2 Cellular, 2 Wi-Fi, 1 ft Cable, White
	PRO4ST2L2W06B	2 Cellular, 2 Wi-Fi, 6 ft Cable, Black
	PRO4ST2L2W06W	2 Cellular, 2 Wi-Fi, 6 ft Cable, White
5:1	PRO5ST2L2WG01B	2 Cellular, 2 Wi-Fi, GPS, 1 ft Cable, Black
	PRO5ST2L2WG01W	2 Cellular, 2 Wi-Fi, GPS, 1 ft Cable, White
	PRO5ST2L2WG06B	2 Cellular, 2 Wi-Fi, GPS, 6 ft Cable, Black
	PRO5ST2L2WG06W	2 Cellular, 2 Wi-Fi, GPS, 6 ft Cable, White
	PRO5ST2L2WG15B	2 Cellular, 2 Wi-Fi, GPS, 15 ft Cable, Black
6:1	PRO6ST2L3WG01B	2 Cellular, 3 Wi-Fi, GPS, 1 ft Cable, Black
	PRO6ST2L3WG01W	2 Cellular, 3 Wi-Fi, GPS, 1 ft Cable, White
	PRO6ST2L3WG06B	2 Cellular, 3 Wi-Fi, GPS, 6 ft Cable, Black
	PRO6ST2L3WG06W	2 Cellular, 3 Wi-Fi, GPS, 6 ft Cable, White

parsec ANTENNAS

Hardware Accessories

Accessory	Part Number
Pole Mount Kit	PTA0637
Lightning Arrestor – SMA(F) to SMA(F)	PTA0476
Lightning Arrestor – N(F) to N(M)	PTA0736
SMA Wrench, Key Chain	PTA0194
Service: Cable Sleeving (Priced Per Ft)	Cable Sleeving

Parsec Antennas
972-804-4600
support@parsec-t.com

Last Revised: 8.30.23