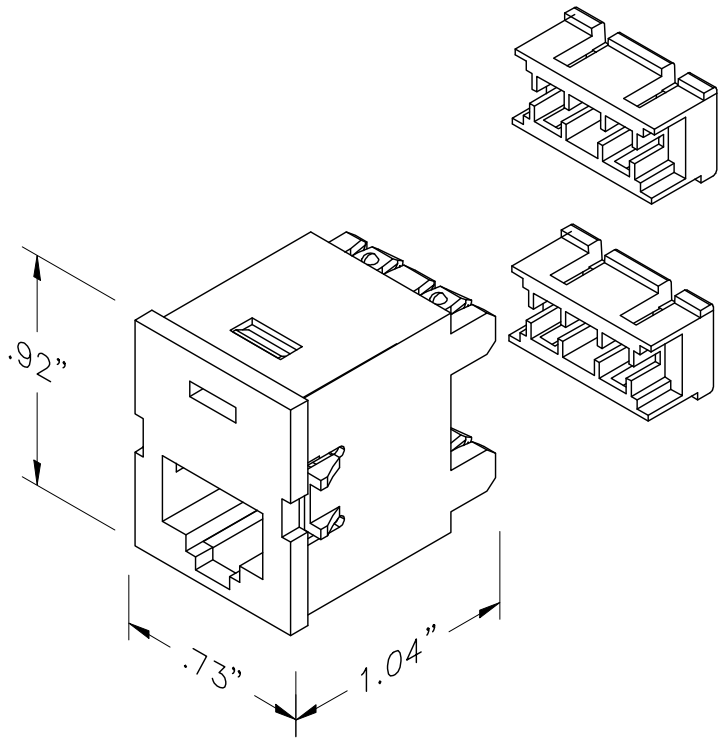

PART NO.	COLOR
63730003	FOG WHITE
63730003-00	BLACK
63730003-13	ELEC. IVORY
*63730003-22	RED
*63730003-24	YELLOW
63730003-25	GREEN
63730003-26	BLUE
63730003-27	VIOLET
63730003-78	WM DK GRAY
–	–
63730003-88	CLOUD WHITE
*63730003-99	WIRE MOLD IVORY

NOTE: IF * NEXT TO PART NUMBER, MINIMUM QUANTITIES REQUIRED.
CONTACT YOUR CUSTOMER SERVICE REPRESENTATIVE (CSR)

*** NOTICE ***
THIS DOCUMENT CONTAINS CONFIDENTIAL AND/OR PROPRIETARY INFORMATION INTENDED FOR USE ONLY BY THE INDIVIDUAL(S) SPECIFIED HEREIN AND ONLY FOR THE PURPOSE(S) PROVIDED. NEITHER THIS DOCUMENT, NOR ANY INFORMATION CONTAINED HEREIN, MAY BE COPIED, DISTRIBUTED, DISCLOSED TO ANY THIRD PARTY OR USED IN ANY MANNER OTHER THAN FOR WHICH IT HAS BEEN PROVIDED, WITHOUT THE PRIOR WRITTEN CONSENT OF ORTRONICS, INC.

ORTRONICS®
NEW LONDON, CT 06320
(860) 445-3800

DWN.BY: DBOGUE	DATE 12/19/97	
CHK.BY: C. COLLELO	08/16/05	
APP.BY: M. MARTICH	09/27/05	

TITLE: TRACJACK, 8P8C,110,T568A/B WIRING CAT 3

SIZE	CAD FILE	PART NUMBER	REV
A	63730003XXC	0R-63730003-XX	10

SCALE	REL DATE	SHEET
NONE	03/25/09	1 OF 1