DS-PR1-60

Security Radar

HIKVISION

ENGLISH

Diagram References

1 Indictaor

a. Power Supply Indicator
Solid Green: Detector Power on

b. Fault Alarm Indicator
Flashing Red: Fault Alarm Occurred, Solid Green: Alarm Restored

c. Zone Alarm Indicator
Solid Red: Zone Alarm Occurred, Solid Green: Alarm Restored

d. Formatting Indicator
Flashing Red: Formatting Successfully

2 Formatting

Loosen the screws on the rear cover to remove the cover. Hold the Reset button while powering the radar on until the red and green LED flashes.

3 Wiring

a. Alarm Output Wiring(Dry Contact Output)
a1: One Strong Current Output
a2: Three Weak Current Output
b. Alarm Input Wiring(Reserved)
c. Power Supply Wiring
d. Network Wiring (supports PoE)
e. Grounding

4 Installation

Before You Start:

- The recommended installation height is 2.5m.
- Make sure that the mounting surface is strong enough to withstand at least 50N, as well as four times the weight of the device and the bracket.

1 Ceiling Mounting

1. Attach the mounting bracket on the detector with four supplied screws.
2. Loosen the screws on both side of the bracket.
3. Adjust the angle of the detector.
4. Tighten the screws on the both side of the bracket to complete the installation.

2 Pole Mounting

1. Attach the mounting bracket on the detector with four supplied screws.
2. Loosen the screws on both side of the bracket.
3. Adjust the angle of the detector.
4. Tighten the screws on the both side of the bracket to complete the installation.

5 Test

Test the radar after installation to make sure it is properly mounted.
Power on the radar and make sure there is no large object in the monitoring area. Make the detector access into the internet.

1. Download and install the iVMS-4200 client.
2. Enter Control Panel-Modules Customization, select Radar, and click OK.
3. Enter Device Management page, select the detector in the Online Device List, click Edit Network Settings, change the port as 80, and click Add to Client. If the network of the radar is not the same as the PC's, click Add Device and enter the radar IP address in the popup window to add the radar.

Note: You should activate the device for the first usage. Select the device in the Online Device List, click Activate, create a password to activate the device.
Scan the QR code to get the security radar user manual.

4. In iVMS-4200 client software, enter Control Panel-Radar.
5. Upload Map: Select a map, enter the actual width(m) and height(m) of the map.
6. Select the radar detector on the left, click and drag the detector onto the map.
7. Move along the edge of the required monitoring filed. Make sure the target sign (red arrow) is moving withhin the radar area(gray sector) shown on the added map. If the target sign is not within the sector, you need to adjust the mounting position or angle of the radar.

6 Set Up

Scan the QR code to get the user manual.

Set up via 4200 Client

1 Add Zone for the Detector

1. In iVMS-4200 client software, enter Control Panel-Radar.
2. Click • • • - **Draw a Zone Manually**, draw a zone on the radar detection area, enter the zone name ,and select a zone type(warning zone, early warning zone, or disabled zone). You can also click • • • - **Draw a Zone Automatically**, and get a zone by walking on the real monitoring area.

2 Add a Speed Dome for a Zone

1. Enter **Remote Configuration-Smart Rule Settings-Camera Linkage Settings**.
2. Click **+** to add cameras to the radar. Select a speed dome in the Camera List, and select a radar zone (or whole field) in the Zone Linkage list.

3 Calibrate the Speed Dome

Set Initial Position
Set the initial position of the speed dome to ensure the tracking accuracy.

1. Select a reference object about 50m away from the speed dome, and select a point (on the reference object) whose altitude is the same as the speed dome's.
2. Enter the IP address of the speed dome in the web broswer to enter the web client. Adjust the PTZ in the live view page to make the point dislayed in the frame. Click 3D Zoom to middle the point in the frame.
3. Enter **Configuration-PTZ-Initial Position**, and click **Set** to set the initial position.

Calibrate the Speed Dome

1. On the Radar page, click • • • - to enter the Master-Slave Tracking Settings page .
2. Select the radar detector and a speed dome on the left. The realtime scene of the speed dome will be displayed.
3. Click and select a coordinate in the Calibration Position list on the right. Adjust the PTZ to make the target to the center of the liveview window alligning with sign +, and click **zoom+/-** to scale the target to a fit size. Click the coordinate again, the radar and PTZ coordinate of the target show in the list , and a target sign + shows on the radar detection area.
4. Adjust the PTZ of the speed dome, align the center sign + with the target in the scene,

Note: Set at least four equally distributed calibration positions if the speed dome is not installed together with the radar.

4 Enable Speed Dome Tracking

1. On the Master-Slave Tracking Settings page, Click **Tracking**.
2. Check **Enable Tracking**.

Set up via Web Client

Input the device IP address in the address bar of the web browser. Enter the user name and password to log into the web client. For detailed settings, refer to Security Control Panel User Manual.

Specification

Model	DS-PR1-60
Detection Range	60 m
Horizontal Angle	100°
Detection Area	About 3000 m^2
Max. Target Number	32
Velocity Range	-8.7 to 8.7 m/s
Range Measurement Accuracy	±0.75 m
Velocity Measurement Accuracy	±0.1 m/s
Angle Measurement Accuracy	±1°
Zone	8
Alarm Output	3-ch weak current output: 0.5 A/125 VAC,breakdown voltage: 1 KV 1-ch strong current output: 10 A/240 VAC,breakdown voltage: 2.5 KV

Netowrk Interface	1 RJ45 10M/100M self-adaptive, supports POE
Communication Protocol	Standard ISAPI protocol, NAL2300 protocol HTTP, DNS, NTP, TCP, UDP, DHCP, ARP, and SSH
Exception Detection	Cover and Wall tamper-proof, and blocking alarm
Power Interface	802.3at standard POE or 12 VDC The supplied power adapter is for 12 VDC power input.
Operation Temperature	−40 C° to 65 C°
Operation Humidity	10% to 90%
Dimension(W x H x D)	206×228×61 mm
IP Level	IP67
Weight	1.84 kg
Installation	Bracket installation, Installation Height:1.2 m to 4 m recommended height range: 2.5 m

Use only power supply listed below:
Manufacturer: Shenzhen HONOR Electronic Co., Ltd.
Model: ADS-26FSG-12 12024EPG

1

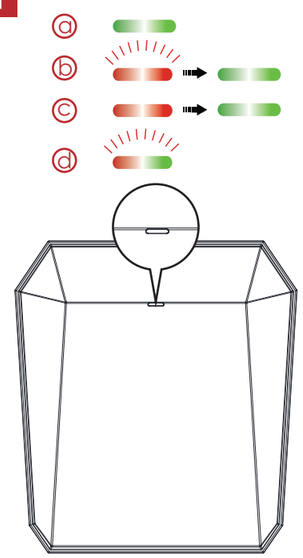

2

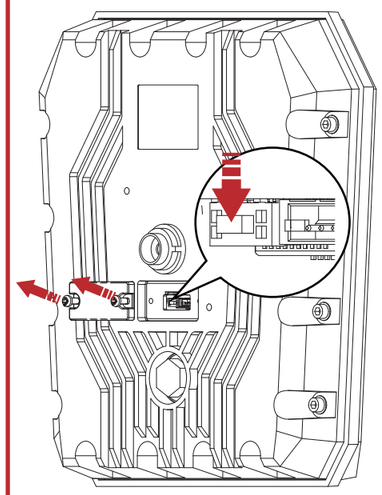

3

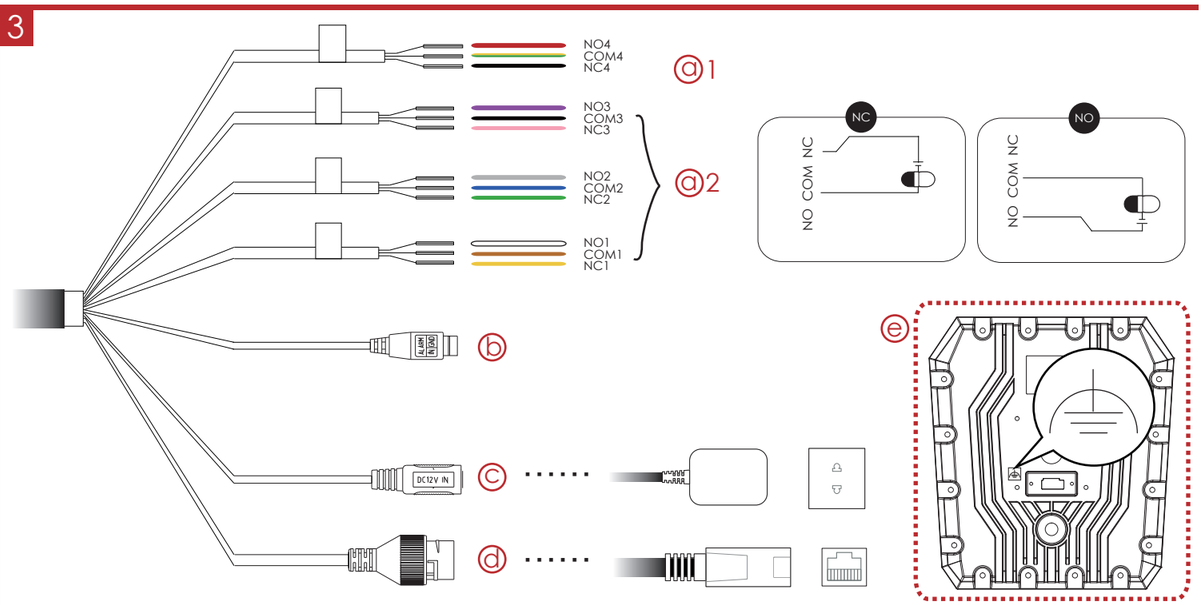

4

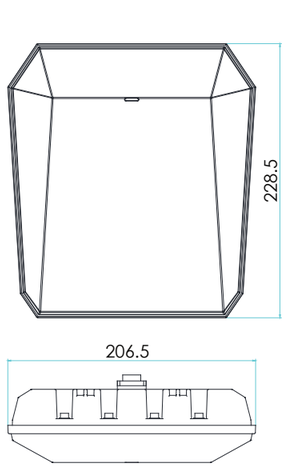

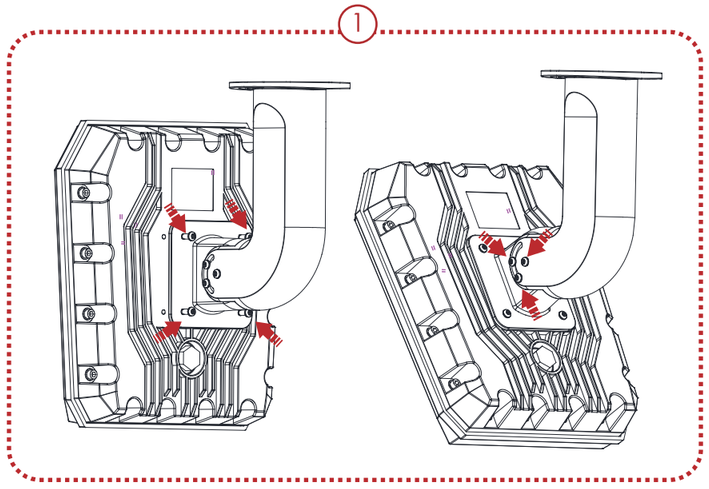

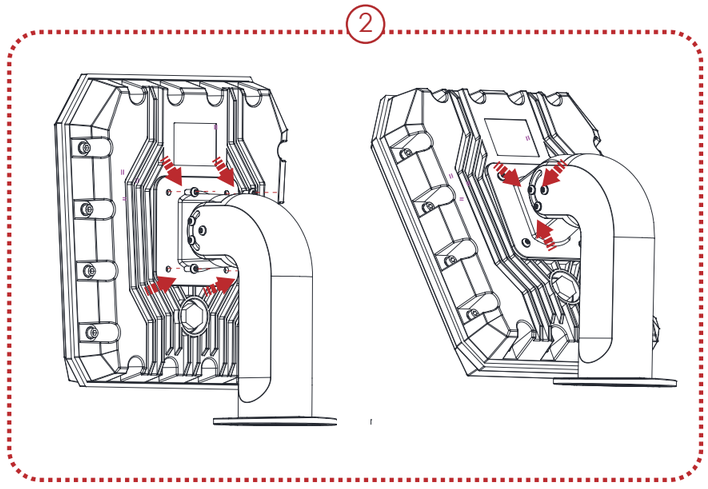

6

2

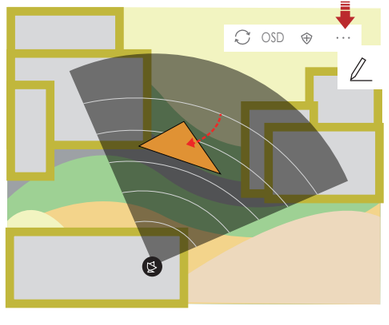

4

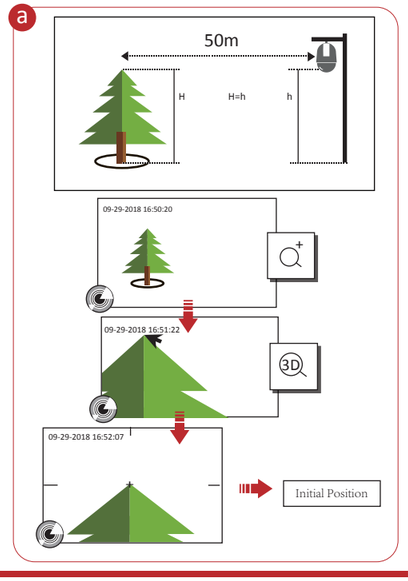

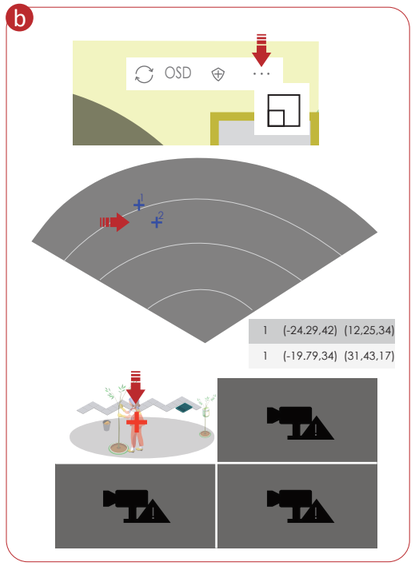

Product Information

COPYRIGHT ©2018 Hangzhou Hikvision Digital Technology Co., Ltd.
ALL RIGHTS RESERVED.
Any and all information, including, among others, wordings, pictures, graphs are the properties of Hangzhou Hikvision Digital Technology Co., Ltd. or its subsidiaries (hereinafter referred to be "Hikvision"). This user manual (hereinafter referred to be "the Manual") cannot be reproduced, changed, translated, or distributed, partially or wholly, by any means, without the prior written permission of Hikvision. Unless otherwise stipulated, Hikvision does not make any warranties, guarantees or representations, express or implied, regarding to the Manual.

About this Manual
This Manual is applicable to the Security Radar.
The Manual includes instructions for using and managing the product. Pictures, charts, images and all other information hereinafter are for description and explanation only. The information contained in the Manual is subject to change, without notice, due to firmware updates or other reasons. Please find the latest version in the company website (http://overseas.hikvision.com/en/).
Please use this user manual under the guidance of professionals.

HIKVISION Trademarks Acknowledgement and other Hikvision's trademarks and logos are the properties of Hikvision in various jurisdictions. Other trademarks and logos mentioned below are the properties of their respective owners.

This product and - if applicable - the supplied accessories too are marked with "CE" and comply therefore with the applicable harmonized European standards listed under the RE Directive 2014/53/EU, the EMC Directive 2014/30/EU, the LVD Directive 2014/35/EU, the RoHS Directive 2011/65/EU.

2006/66/EC (battery directive): This product contains a battery that cannot be disposed of as unsorted municipal waste in the European Union. See the product documentation for specific battery information. The battery is marked with this symbol, which may include lettering to indicate cadmium (Cd), lead (Pb), or mercury (Hg). For proper recycling, return the battery to your supplier or to a designated collection point. For more information see:www.recyclethis.info

2012/19/EU (WEEE directive): Products marked with this symbol cannot be disposed of as unsorted municipal waste in the European Union. For proper recycling, return this product to your local supplier upon the purchase of equivalent new equipment, or dispose of it at designated collection points. For more information see: www.recyclethis.info

This product operates in a European non-harmonised frequency band.

UD12261B