REVISIONS		
Rev	DESCRIPTION	DATE
A	INITIAL RELEASE	05/15/2017

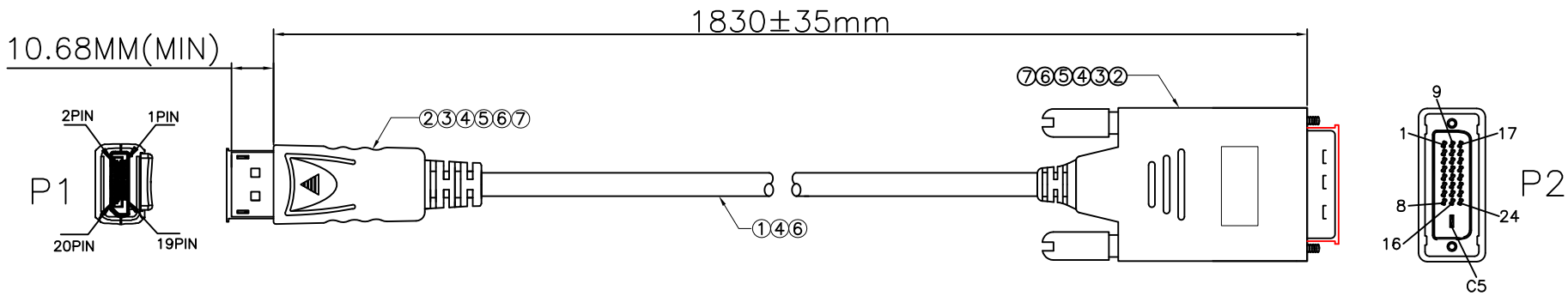

PIN Assignment

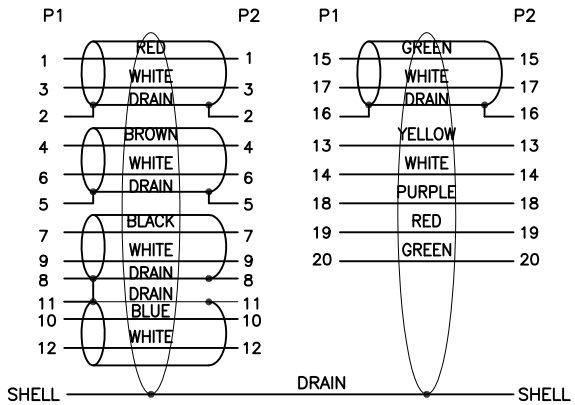

ELECTRICAL TEST :

1.100% OPEN & SHORT & MIS WIRE TEST
2.CONTACT RESISTANCE: 3 OHM(MAX)
3.INSULATION RESISTANCE:10M OHM(MIN)
4.HI-POT TEST:DC 300V/10ms
5.100% of image Test

PRODUCT SPECIFICATIONS :

1.Connector Type: DisplayPort MALE TO DVI MALE
2.Connector Plating and Material:
DisplayPort Port M White Insulation ,Gold Plated 3u Terminal ,Gold Plated Shell.
DVI M White Insulation ,Gold Plated Terminal ,Gold Plated Shell.
3.Color: Black connectors and Black ABS Shell
4.RoHS 2.0: Yes
5.Resolution Supported: 1080P 60Hz
6.Cable Specifications:
Display Port UL20276~(28AWG*1P+EAM)*5C+28AWG*4C+AEB 85%AL~OD:7.3MM~Black~Marking:DisplayPort cable E342987 AWM STYLE 20276 80C 30V VW-1
7.Active Adapter Supports TMDS

The information contained in this document is the sole property of Black Box Corporation of Pennsylvania. Any reproduction in part or whole without the written permission of Black Box Corp. is prohibited.

©Copyright 2012 Black Box Corporation of Pennsylvania d/b/a Black Box Network Services. All Rights Reserved.

UNLESS OTHERWISE SPECIFIED:
DIMENSIONS ARE IN INCHES
TOLERANCES:
FRACTIONAL ±
ANGULAR: MACH ± BEND ±
TWO PLACE DECIMAL ±
THREE PLACE DECIMAL ±
INTERPRET GEOMETRIC TOLERANCING PER:
MATERIAL CRS
FINISH POWDER COAT
DO NOT SCALE DRAWING

BLACK BOX®

	NAME	DATE
DRAWN	AX.Ding	05/15/2017
ENG APPR.		
CHECKED		
COMMENTS:		

TITLE: DisplayPort M TO DVI M CABLE L=6FT Black

SIZE B | DWG. NO. EVNDPDVI-0006-MM | REV A

SCALE: 1:1 | SHEET 1 OF 2