DO NOT SCALE
THIRD ANGLE PROJECTION

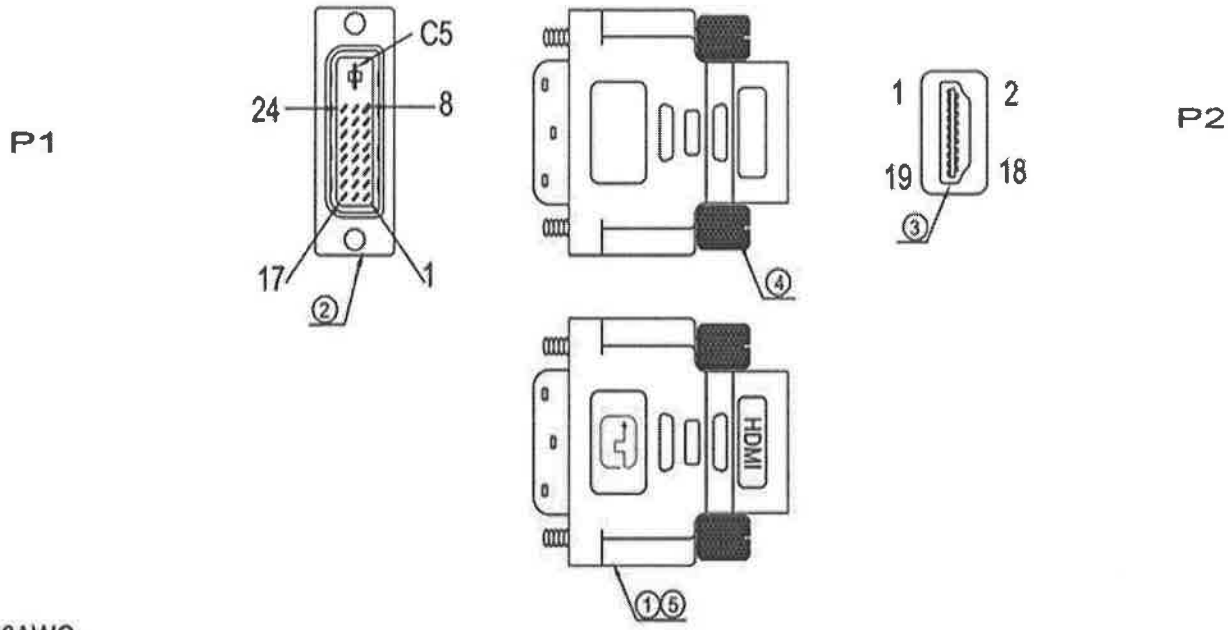

NOTE:

1.CABLE:UL1007 26AWG .
2.CONNECTORS:DVI(24+1) M INSULATION BLACK SHELL NICKEL PLATED.
3.CONNECTORS:HDMI 19PIN FEMALE A TYPE INSULATION BLACK SHELL NICKEL PLATED.
4.SCREW:#4-40 SCREW.
5.MOLD:45P PVC BLACK

HDMI19F	1	3	2	4	6	5	7	9	8	10	12	11	15	16	17	18	19	64
DVI24M	2	1	3	10	9	11	18	17	19	23	24	22	6	7	15	14	16	64

ELECTRICAL TEST:

1.OPEN/SHORT TEST:100% TEST.
2.INSULATION:5M

DESCRIPTION	DATE		TITLE	DRAWN	CHECKED	APPROVED	DATE
FA795-R2	7/2/2005	BLACK BOX NETWORK SERVICES 1000 PARK DRIVE LAWRENCE, PA 15055-1018	FA795-R2 Adapter DVI MALE TO HDMI FEMALE	FSR	EFW	GWS	7/2/2(
				DRAWING No. FA795-R2			