InRow® Direct-Expansion Air Conditioners

ACRD100, ACRD101

Installation Manual

990-3211F-001
Release Date: April/2023

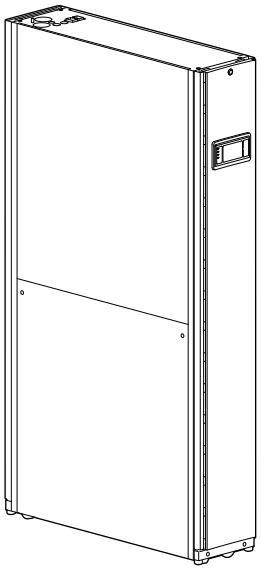

Legal Information

The Schneider Electric brand and any trademarks of Schneider Electric SE and its subsidiaries referred to in this guide are the property of Schneider Electric SE or its subsidiaries. All other brands may be trademarks of their respective owners.

This guide and its content are protected under applicable copyright laws and furnished for informational use only. No part of this guide may be reproduced or transmitted in any form or by any means (electronic, mechanical, photocopying, recording, or otherwise), for any purpose, without the prior written permission of Schneider Electric.

Schneider Electric does not grant any right or license for commercial use of the guide or its content, except for a non-exclusive and personal license to consult it on an "as is" basis. Schneider Electric products and equipment should be installed, operated, serviced, and maintained only by qualified personnel.

As standards, specifications, and designs change from time to time, information contained in this guide may be subject to change without notice.

To the extent permitted by applicable law, no responsibility or liability is assumed by Schneider Electric and its subsidiaries for any errors or omissions in the informational content of this material or consequences arising out of or resulting from the use of the information contained herein.

Table of Contents

Safety 5
- Important Safety Instructions — SAVE THESE INSTRUCTIONS 5
- Safety During Installation 6

General Information 8
- Document Overview 8
  - Save These Instructions 8
  - Manual Updates 8
  - Cross-Reference Symbol Used in This Manual 8
- Environmental Considerations 8
- Receiving and Inspecting the Equipment 10
  - Filing a Claim 10
- Storing the Cooling Unit Before Installation 10
- Moving the Equipment 11
- Unit Overview 11
  - Model Identification 11

Component Identification 12
- Install Kit 12
- External Components 13
- Internal Components—Front 14
- Internal Components—Rear 15
- Electrical Panel 16
- Top Piping and Power Access Locations 17
- Bottom Piping and Power Access Locations 18

Dimensions and Weights 19
- Service Access 19

Diagrams 20
- Refrigeration Piping Diagram 20

Installation 21
- Location and Power Considerations 21
  - Room Preparation 21
  - Incoming Power Supply Requirements 21
- Removing Doors and Panels 22
  - Door Removal 22
  - Side Panel Removal 23
- Stabilizing the Cooling Unit 24
  - Leveling 24
  - Bolt-Down Kit 25
  - Joining the Equipment to Enclosures 25
- Connections Overview 26
  - Power Connections 26
  - Piping Connections 26
- Mechanical Connections 27
  - Remove the Compressor Shipping Bracket 27
  - Refrigerant Piping 28
  - Condenser 29
  - Flooded Receiver 29
  - Condensate Pump 30

Electrical Connections 32
Control Connections 33
Communication Connections 35
Power Connections 40
Wiring Configurations 40
Top Routing 40
Bottom Routing 41
Flooded Receiver Heater 41
Charging the Refrigeration System 42
Adding a Holding Charge 42
Compressor Oil Charge 44
Adding Compressor Oil 44

Safety

Important Safety Instructions — SAVE THESE INSTRUCTIONS

Read these instructions carefully and look at the equipment to become familiar with it before trying to install, operate, service or maintain it. The following safety messages may appear throughout this manual or on the equipment to warn of potential hazards or to call attention to information that clarifies or simplifies a procedure.



The addition of this symbol to a “Danger” or “Warning” safety message indicates that an electrical hazard exists which will result in personal injury if the related instructions are not followed.



This is the safety alert symbol. It is used to alert the user to potential personal injury hazards. Obey all safety messages with this symbol to avoid possible injury or death.

⚠DANGER

DANGER indicates a hazardous situation which, if not avoided, **will result in** death or serious injury.

Failure to follow these instructions will result in death or serious injury.

⚠WARNING

WARNING indicates a hazardous situation which, if not avoided, **could result in** death or serious injury.

Failure to follow these instructions can result in death, serious injury, or equipment damage.

⚠CAUTION

CAUTION indicates a hazardous situation which, if not avoided, **could result in** minor or moderate injury.

Failure to follow these instructions can result in injury or equipment damage.

NOTICE

NOTICE is used to address practices not related to physical injury. The safety alert symbol shall not be used with this type of safety message.

Failure to follow these instructions can result in equipment damage.

Please Note

Electrical equipment should only be installed, operated, serviced, and maintained by qualified personnel. No responsibility is assumed by Schneider Electric for any consequences arising out of the use of this material.

A qualified person is one who has skills and knowledge related to the construction, installation, and operation of electrical equipment and has received safety training to recognize and avoid the hazards involved.

Always abide strictly by local laws and regulations in force in the place of installation.

Safety During Installation

⚠⚠DANGER

HAZARD OF ELECTRIC SHOCK, EXPLOSION, OR ARC FLASH

- Apply appropriate personal protective equipment (PPE) and follow safe electrical work practices.
- This equipment must be installed and serviced by qualified and trained personnel only.
- Turn off all power supplying this equipment before working on or inside the equipment.
- Replace all devices, doors, and covers before turning on power to this equipment.

Failure to follow these instructions will result in death or serious injury.

⚠WARNING

HAZARD TO EQUIPMENT OR PERSONNEL

This equipment is not to be operated or installed by persons with reduced physical, sensory, or mental capabilities, or persons lacking experience or knowledge. Children are not to operate or play on or around this equipment.

Failure to follow these instructions can result in death, serious injury, or equipment damage.

⚠WARNING

HAZARD OF EQUIPMENT FALLING OVER

- Use two or more persons at all times to move or turn this equipment.
- Always push, pull, or turn while facing the front and rear of this equipment. Never push, pull, or turn while facing the sides of this equipment.
- Slowly move this equipment across uneven surfaces or door thresholds.
- Lower leveling feet to floor when this equipment is at rest.
- Lower leveling feet and attach joining brackets to adjacent racks when this equipment is in final position.

Failure to follow these instructions can result in death, serious injury, or equipment damage.

⚠WARNING

HAZARD FROM MOVING PARTS

Keep hands, clothing, and jewelry away from moving parts. Check the equipment for foreign objects before closing the doors and starting the equipment.

Failure to follow these instructions can result in death, serious injury, or equipment damage.

⚠WARNING

HAZARD TO EQUIPMENT OR PERSONNEL

All work must be performed by Schneider Electric qualified and trained personnel.

Failure to follow these instructions can result in death, serious injury, or equipment damage.

General Information

Document Overview

Save These Instructions

This manual contains important instructions that must be followed during the installation and maintenance of this equipment.

Manual Updates

Schneider Electric™ policy is one of continuous technological innovation and the company reserves the right to amend any data herein without prior notice. The images shown in this manual are for descriptive purposes only.

NOTE: Unit images and component identification information are examples only.

For any updates to this manual, please contact Schneider Electric™ providing the related part number displayed on the manual back cover.

Cross-Reference Symbol Used in This Manual



See another section of this document or another document for more information on this subject.

Environmental Considerations

Wind

The equipment is not intended for installation in areas of high wind. Consult the sales representative for information on any applicable options for installation in areas of high wind.

Earthquakes

The equipment is not intended for installation in areas at risk of seismic activity. Consult the sales representative for information on any applicable options for installation in areas at risk of seismic activity.

ATEX

The equipment is not intended for use in potentially explosive atmospheres and does not comply with Directive 2014/34 / EU (ATEX).

Dust

The equipment is not intended for use in dusty environments and in environments with conductive dust.

Corrosion

The equipment is not intended for use in a potentially corrosive environment.

Receiving and Inspecting the Equipment

Uniflair Direct Expansion InRow air conditioner has been tested and inspected for quality assurance before shipment from Schneider Electric. Carefully inspect both the exterior and interior of the equipment immediately upon receipt to ensure that the equipment has not been damaged during transit.

Verify that all parts ordered were received as specified and that the equipment is the correct type, size, and voltage.

Filing a Claim

If damage is identified on receipt of the equipment, note the damage on the bill of lading and file a damage claim with the shipping company. Contact Schneider Electric Worldwide Customer Support at one of the numbers listed on the Web page on the back page of this manual for information on how to file a claim with the shipping company*. The shipping claim must be filed at the receiving end of the delivery and shall be sent no later than 30 days upon unit receipt.

NOTE: In case of shipping damage, do not operate the equipment. Keep all packaging for inspection by the shipping company and contact Schneider Electric.

*e.g. a freight forwarder or an insurance company, depending on shipment arrangement

Storing the Cooling Unit Before Installation

NOTICE
DAMAGE FROM EXPOSURE Leaving the equipment uncovered and exposed to possible damage from the environment will void the factory warranty. **Failure to follow these instructions can result in equipment damage.**

If the cooling unit will not be installed immediately, store it in a safe place, protected from the weather.

Moving the Equipment

⚠WARNING

HAZARD OF EQUIPMENT FALLING OVER

- Use two or more persons at all times to move or turn this equipment.
- Always push, pull, or turn while facing the front and rear of this equipment. Never push, pull, or turn while facing the sides of this equipment.
- Slowly move this equipment across uneven surfaces or door thresholds.
- Lower leveling feet to floor when this equipment is at rest.
- Lower leveling feet and attach joining brackets to adjacent racks when this equipment is in final position.

Failure to follow these instructions can result in death, serious injury, or equipment damage.

The recommended tools for moving equipment while it is still on the pallet include the following:

FORKLIFT



PALLET JACK



Unit Overview

Model Identification

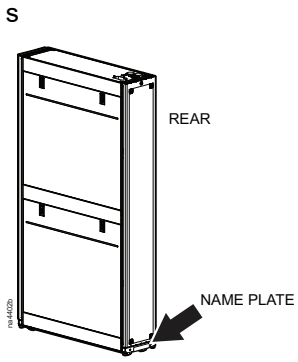

The model number can be found on the outside of the shipping crate and on the name plate located on the unit as shown. Use the table below to verify that the equipment is the right type and voltage.

Model	Range of Capacity	Heat Rejection	Voltage/Phase/ Frequency	Humidifier/Reheat	Air Pattern
ACRD100	Up to 10 kW	Air-cooled	208-240/1~/60 Hz	None	Back to front
ACRD101	Up to 10 kW	Air-cooled	220-240/1~/50 Hz	None	Back to front

Component Identification

Install Kit

NOTE: Do not discard the install kit.

The install kit contains items which may be necessary to complete the installation of your equipment. Some items are the literature, floor brackets, and hardware to facilitate joining the equipment to enclosures.

Item	Quantity
Cable assembly, thermistor/probe – 4 m (13 ft)	1
Netshelter® SX bolt-down kit	1
Teflon ring (for Rotolock)	4
Wire clip, thermistor probe	3
Resistor, 150 ohm, 1/4 watt	1
Screw, flat head Philips M5 x 12	4
Key	2
Nylon push mount, 1-1/4-in. diameter	8

External Components

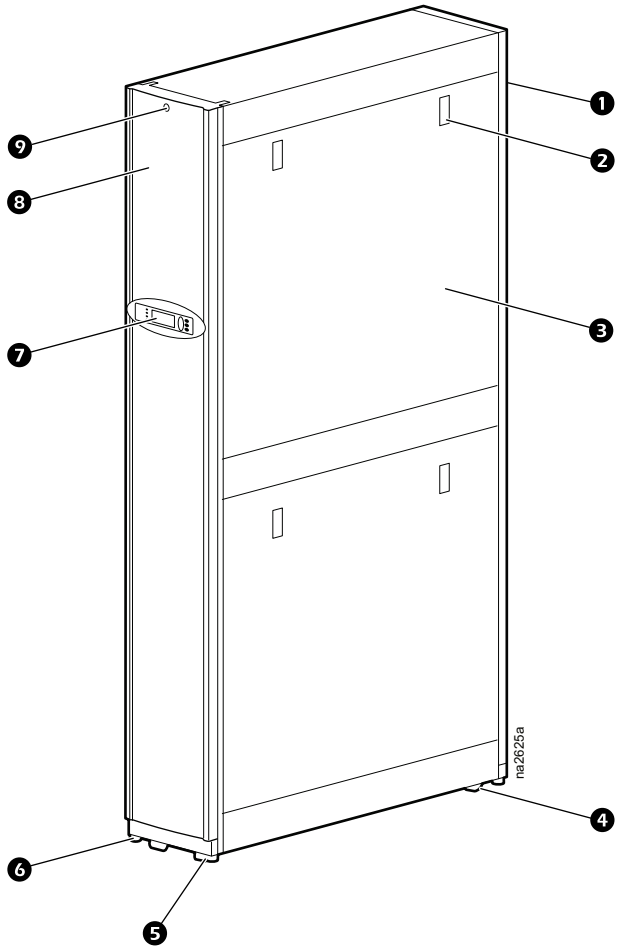

Item	Description
1	Removable rear door
2	Side panel latch
3	Removable side panel
4	Rear casters (non-swiveling)
5	Front casters (swiveling)
6	Adjustable leveling foot
7	Display interface
8	Removable front door
9	Door lock

Internal Components—Front

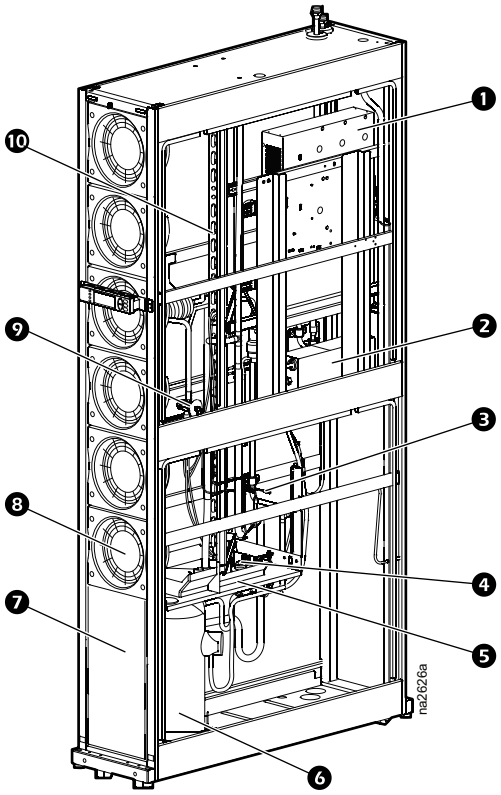

Item	Description
1	Electrical control box 1
2	Electrical control box 2
3	Temperature sensor (7 total)
4	Condensate pan floats (2)
5	Condensate pan
6	Compressor
7	Front air block panel
8	Evaporator fans (6)
9	Expansion valve
10	Evaporator coil

Internal Components—Rear

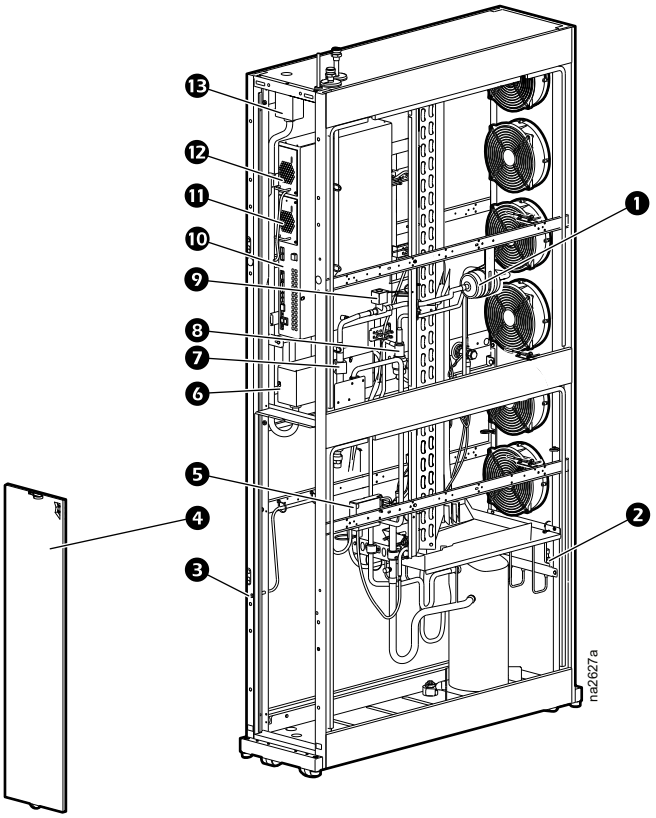

Item	Description
1	Filter drier
2	Pressure transducer (2) (located behind air block)
3	Filter differential pressure port
4	Air filter (2)
5	Condensate pump (2)
6	Electrical control box 2
7	Sight glass
8	Hot gas bypass valve
9	Liquid line shutoff solenoid
10	Electrical control box 1
11	Power supply unit #2
12	Power supply unit #1
13	Service junction box (top entry shown)

Electrical Panel

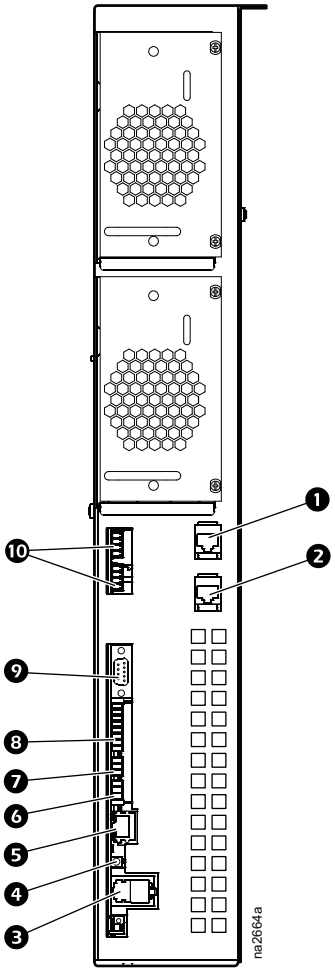

Item	Description
1	Leak detector port
2	Remote temperature sensor port
3	A-Link ports
4	Reset button
5	Network port
6	Building management system (BMS) RS-485 port
7	Control RS-485 port
8	Form C and shutdown input
9	RS-232 console port
10	Outdoor heat exchanger (OHE) ports (optional)

Top Piping and Power Access Locations

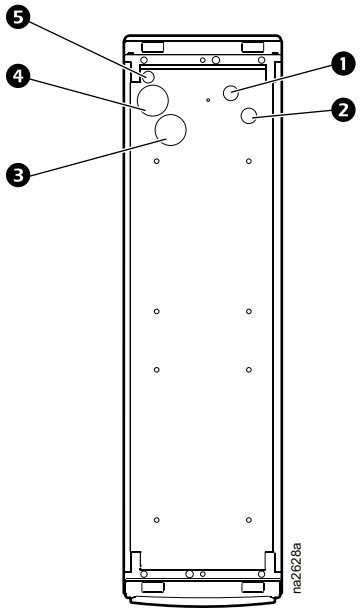

Item	Description
❶	Electrical input
❷	Low voltage wiring input
❸	Hot gas line
❹	Liquid line
❺	Condensate pump outlet

Bottom Piping and Power Access Locations

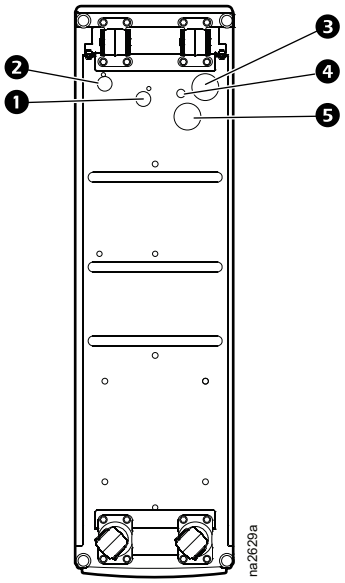

Item	Description
❶	Electrical input
❷	Low voltage wiring input
❸	Liquid line
❹	Condensate pump outlet
❺	Hot gas line

Dimensions and Weights

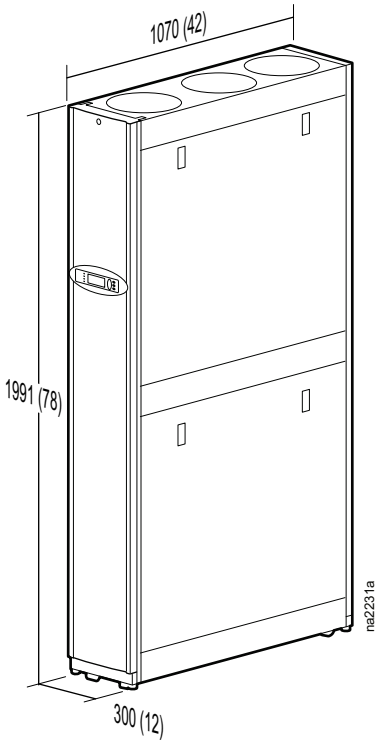

NOTE: Dimensions are shown in mm (in.).

Model	Packaged Weight – kg (lb)	Unpackaged Weight – kg (lb)
ACRD100, ACRD101	221.0 (488.0)	183.0 (404.0)

Service Access

A minimum 914 mm (36 in.) of clear floor space in front of and behind the equipment is recommended for service. All required periodic maintenance can be performed from the front or rear of the equipment.

Most of the cooling components in the equipment (e.g., dry filter, sight glass, solenoid, and expansion valves) must be soldered for repair or replacement. Do not service these components while the equipment is located inside the data center. Use the casters on the equipment to move it outside the data center for service. A minimum of 1200 mm (48 in.) of clear floor space in front of or behind the equipment is recommended to roll out the equipment.

NOTE: Check local and national codes and regulations for additional service access requirements.

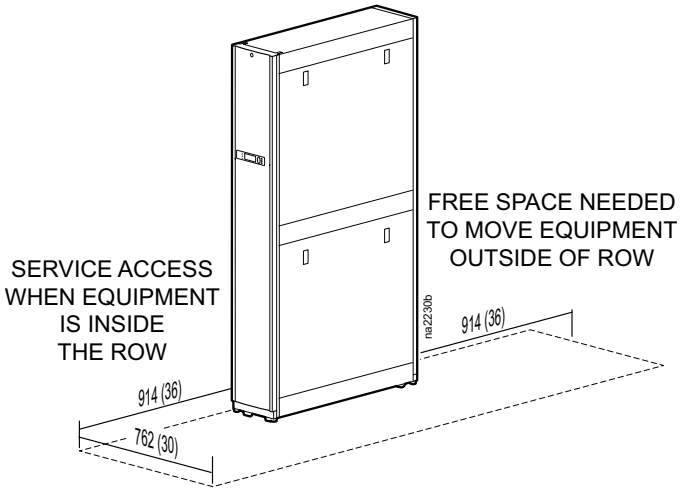

Dimensions are shown in mm (in.).

Diagrams

Refrigeration Piping Diagram

Do not install the air-cooled condenser below the InRow DX unit. The condenser must be positioned above or at the same level as the InRow DX unit to ensure proper function.

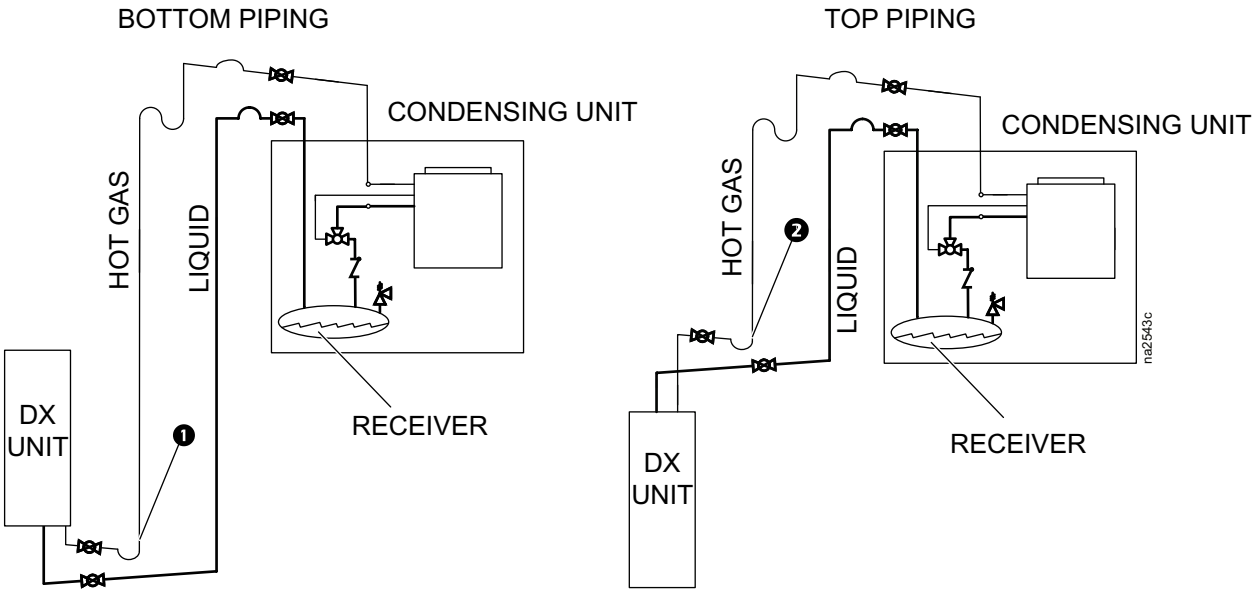

Item	Description
❶	Pitch in direction of refrigerant flow; 4 mm per m (1/2-in. per 10 ft)
❷	Reduction of piping diameter for vertical piping run (if necessary)
	Shut-off valve
	Head pressure control valve

Item	Description
	Check valve
	P-trap
	S-trap
	Inverted P-trap

NOTE: Route piping through the top or bottom of the InRow DX.

NOTE: All lines are Type L ACR copper tubing.

NOTE: Trap the vertical discharge line every 6 m (20 ft) to ensure proper oil return.

NOTE: Change the size of the pipe after the P-trap. See the piping diagram created for your site.

NOTE: The maximum piping run is 61 m (200 ft) equivalent length. Size the piping pursuant to accepted refrigeration practice.

Installation

Location and Power Considerations

Room Preparation

During the design of the data center, consider ease of entry for the equipment, floor loading factors, and accessibility to piping and wiring. In addition, the room temperature and humidity combination should conform to the environmental operating envelope as defined. The equipment distributes air in a back-to-front discharge pattern, removing hot air from a hot aisle and discharging cooled air into a cold aisle.

NOTE: The equipment is designed for free air discharge or for use with the Rack Air Containment System or Hot Aisle Containment System. The equipment is not intended to be connected to a duct system.

Seal the room with a vapor barrier to minimize moisture infiltration. Polyethylene film is recommended for ceiling and wall applications. Apply rubber- or plastic-based paints to concrete walls and floors.

Insulate the room to minimize the influence of exterior heat loads. Reduce fresh air to the minimum required by local and national codes and regulations. Fresh air imposes extreme load variation on the cooling equipment from summer to winter and causes increased system operating costs.

Incoming Power Supply Requirements

⚠⚠WARNING

ELECTRICAL HAZARD

- Electrical service must conform to local and national electrical codes and regulations.
- The equipment must be grounded.

Failure to follow these instructions can result in death, serious injury, or equipment damage.

See the name plate on the unit to determine the maximum possible current draw of the cooling unit. Provide either a single outlet circuit or a Power Distribution Unit (PDU) with sufficient capacity to handle all loads. Do not plug two Uniflair InRow cooling units into the same branch circuit or PDU.

Removing Doors and Panels

⚠WARNING

MOVING PARTS HAZARD

Do not remove rear panels if the equipment is operating.

Failure to follow these instructions can result in death, serious injury, or equipment damage.

NOTICE

EQUIPMENT DAMAGE

Do not lean the doors against a wall with the side panel latches facing the wall. This can deform the latches and prevent them from working properly.

Failure to follow these instructions can result in equipment damage.

Door Removal

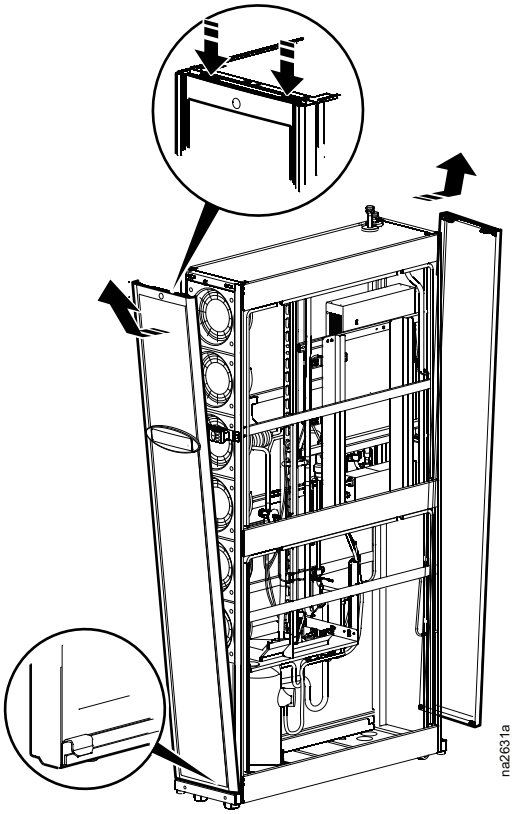

Side Panel Removal

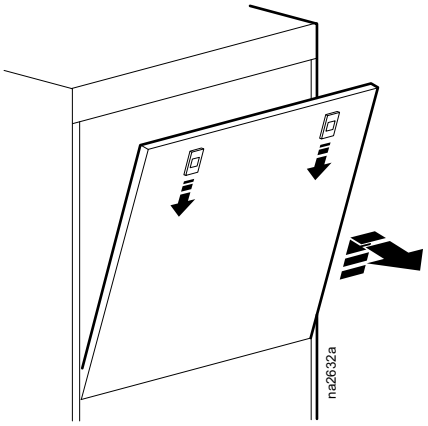

Stabilizing the Cooling Unit

⚠⚠DANGER

HAZARD OF ELECTRIC SHOCK, EXPLOSION, OR ARC FLASH

Turn off all power supplying this equipment before working on the equipment. All electrical work must be performed by qualified personnel. Apply Lockout/Tagout procedures. Do not wear jewelry when working with electrical equipment.

Failure to follow these instructions will result in death or serious injury.

⚠WARNING

HAZARD OF EQUIPMENT FALLING OVER

- Use two or more persons at all times to move or turn this equipment.
- Always push, pull, or turn while facing the front and rear of this equipment. Never push, pull, or turn while facing the sides of this equipment.
- Slowly move this equipment across uneven surfaces or door thresholds.
- Lower leveling feet to floor when this equipment is at rest.
- Lower leveling feet and attach joining brackets to adjacent racks when this equipment is in final position.

Failure to follow these instructions can result in death, serious injury, or equipment damage.

Leveling

NOTICE

WIRING HAZARD

After re-installing the front door, reconnect any wires previously disconnected.

Failure to follow these instructions can result in equipment damage.

The leveling feet provide a stable base if the floor is uneven but cannot compensate for a badly sloped surface.

Once the cooling unit is in its intended location, use a screwdriver to turn each leveling foot until it makes contact with the floor. Adjust each foot until the cooling unit is level and plumb. The casters and leveling feet can be removed to allow the cooling unit to rest directly on the floor.

NOTE: Front and rear panels will need to be removed to access the leveling screw.

NOTE: The image below is an example only. The unit in use may differ.

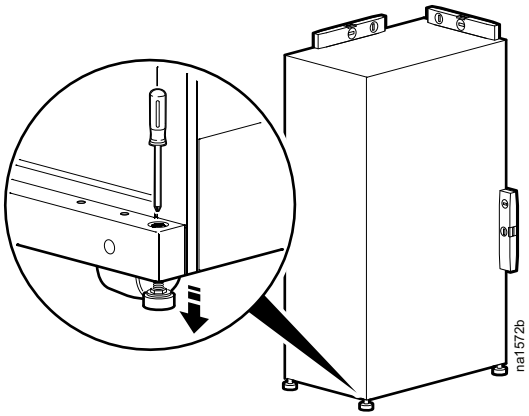

NOTE: Alternatively, use a 13-mm open-ended wrench to level the equipment without removing the doors.

Bolt-Down Kit

To prevent the cooling unit from moving (if it is not joined with an enclosure), use the included bolt-down kit (AR7701). Follow the installation instructions included with the kit.

Refer to the installation instruction included in the kit for more detailed information.

Joining the Equipment to Enclosures

Joining to NetShelter™ SX Enclosures

Joining brackets are installed on the unit, two in the front and two on the rear. Each bracket is designed to accommodate both 24-in. or 600-mm enclosure spacing.

NOTE: Image is an example only: the unit may differ.

1. Loosen the attachment screw.
2. Rotate the brackets 90°.
3. Install a provided Phillips M5 screw through the bracket and into the adjoining enclosure.
4. Retighten the attachment screw.

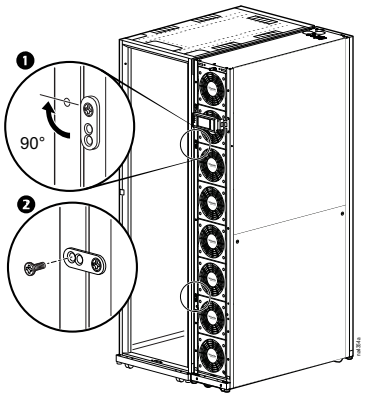

Connections Overview

⚠⚠WARNING

ELECTRICAL HAZARD

- Electrical service must conform to local and national electrical codes and regulations.
- The equipment must be grounded.

Failure to follow these instructions can result in death, serious injury, or equipment damage.

NOTE: FOR INSTALLATION IN CHINA ONLY - 电源外接导线长度不超过2m时其横截面积不得小于2.5mm2，超过2m按国家和地方规定加大导线规格，其规格应不轻于IEC227的53号线.

All connections to and from the equipment can be made through either the top or the bottom of the equipment. Once the corresponding connectors are sweat soldered or brazed into place, the equipment can be disconnected without soldering, welding, or gluing. See the following tables for information about the sizes and types of connectors.

Power Connections

Model	Voltage	Frequency – Hz	MCA	MOP	FLA	LRA
ACRD100	208-240	60	25	40	N/A	87.5
ACRD101	220-240	50	N/A	N/A	21	N/A

Data is based on maximum operating conditions.
Consult local and national codes for wire size, conduit requirements, and overload protection.
MCA: Minimum Circuit Ampacity
MOP: Maximum Overcurrent Protection
FLA: Full Load Amps
LRA: Locked Rotor Amps

Piping Connections

Connection	Type of Connection	Unit Connection
Refrigerant discharge	1-in. Rotalock*	1/2-in. OD
Refrigerant liquid	1-in. Rotalock*	1/2-in. OD
Condensate drain	—	3/16-in. ID 5/16-in. OD

*Use the provided Teflon® gasket to prevent leakage. Tighten the Rotalock™ nut to 75 Nm (55 lb-ft).

Mechanical Connections

⚠⚠DANGER

HAZARD OF ELECTRIC SHOCK, EXPLOSION, OR ARC FLASH

- Apply appropriate personal protective equipment (PPE) and follow safe electrical work practices.
- This equipment must be installed and serviced by qualified and trained personnel only.
- Turn off all power supplying this equipment before working on or inside the equipment.
- Replace all devices, doors, and covers before turning on power to this equipment.

Failure to follow these instructions will result in death or serious injury.

⚠WARNING

HAZARD OF EQUIPMENT FALLING OVER

- Use two or more persons at all times to move or turn this equipment.
- Always push, pull, or turn while facing the front and rear of this equipment. Never push, pull, or turn while facing the sides of this equipment.
- Slowly move this equipment across uneven surfaces or door thresholds.
- Lower leveling feet to floor when this equipment is at rest.
- Lower leveling feet and attach joining brackets to adjacent racks when this equipment is in final position.

Failure to follow these instructions can result in death, serious injury, or equipment damage.

Remove the Compressor Shipping Bracket

NOTICE

VOIDED WARRANTY

Failure to complete the following steps may result in equipment damage and will void your warranty.

Failure to follow these instructions can result in equipment damage.

The compressor is secured by a bracket to prevent damage during shipping. This bracket must be removed before you apply power to the equipment.

1. Remove two T30 TORX® screws from the bracket as shown. Save the screws for possible future use.
2. Remove the bracket and save for possible future use.

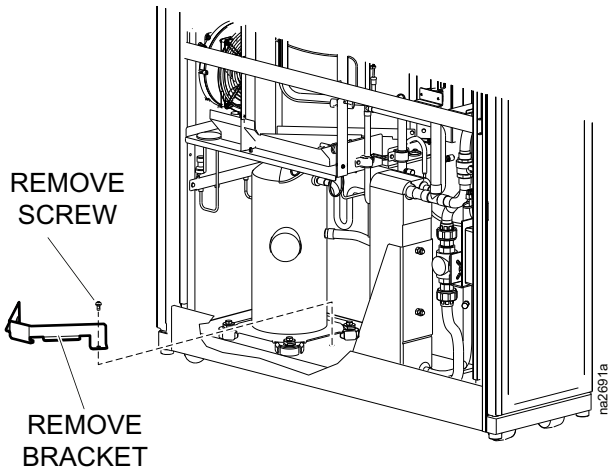

Refrigerant Piping

The equipment must be connected to a condenser—either a remote outdoor condenser or an indoor centrifugal condenser. Systems with remote outdoor or indoor centrifugal condensers will require discharge and liquid lines from the equipment to the condenser. Install all refrigerant lines in accordance with applicable industry guidelines as well as local and national codes and regulations.

See Recommended Line Sizes, page 29.

Calculate an equivalent length based on the actual linear length of the run, including valves and fittings.

NOTE: All fittings should be long-radius to minimize pressure drop.

Discharge lines are sized such that velocity in vertical lines is between 5 m/s (1000 ft/min) and 15 m/s (3000 ft/m). Limit the velocity in horizontal lines to 2.5 m/s (500 ft/min). The refrigerant velocity must be high enough to keep oil entrained in the flow. If it is too low, oil will not return to the compressor. If the refrigerant velocity is too high, both the noise level and pressure drop will increase. Pressure drops of up to 0.7 bar (10 psi) in discharge lines are acceptable.

NOTE: Fully loaded, the nominal cooling capacity of the equipment is 10 kW. At its lowest speed, the equipment cooling capacity is approximately 2 kW.

NOTE: Give consideration to the loaded and unloaded state of the compressor to ensure that the operational range stays within these limits.

NOTE: Change the size of the pipe before the P-trap.

See Refrigeration Piping Diagram, page 20.

Make all refrigerant lines as short and direct as possible. Horizontal discharge lines must a minimum downward pitch of 4 mm per m (1/2 in. per 10 ft) in the flow direction to aid in oil return. Install traps in the vertical discharge lines approximately every 6 m (20 ft) to ensure proper oil return. Traps are normally not necessary at the base of discharge lines; however, loop the line to the floor before running it vertically to prevent the drainage of oil back to the compressor during shutdown periods.

Isolate piping from structural surfaces using vibration clamps.

NOTE: Install all piping in accordance with applicable industry guidelines as well as local and national codes and regulations.

Be sure to use only clean, refrigerant-grade (ACR Type L) pipe and follow standard procedures for pipe size selection for air-cooled equipment. The maximum allowable equivalent length between the evaporator and condenser is 61 equivalent m (200 equivalent ft). Vertical runs (hot gas) require a trap every 6 m (20 ft) of rise.

NOTE: When brazing field-installed copper refrigeration lines, use a nitrogen purge to minimize contamination of the refrigeration system during the brazing process.

The air-cooled equipment has been dehydrated at the factory and is shipped with a holding charge of 207 kPa (30 psig) nitrogen. Test refrigerant connections for leaks before replacing the holding charge.

Connect both refrigerant lines to the equipment, using provided fittings.

See Install Kit, page 12.

ASHRAE Standards for Equivalent Piping Lengths of Fittings and Valves

Type of Fitting or Valve—Equivalent Length of Pipe in m (ft)					
ACR Pipe Size, OD	**Gate Valve**	**Standard Elbow 90°**	**Reduced Coupling**	**Side Outlet T**	**Angle Valve**
1/2 in.	0.18 (0.6)	0.43 (1.4)	0.43 (1.4)	0.82 (2.7)	1.83 (6.0)
5/8 in.	0.21 (0.7)	0.49 (1.6)	0.49 (1.6)	0.91 (3.0)	2.13 (7.0)

Recommended Line Sizes

Equivalent Length – m (ft)	Line Type	ACRD100, ACRD101 (OD)
15 (50)	Discharge line (horizontal)	5/8 in. ACR
	Discharge line (vertical)	1/2 in. ACR
	Liquid line	1/2 in. ACR
30 (100)	Discharge line (horizontal)	5/8 in. ACR
	Discharge line (vertical)	1/2 in. ACR
	Liquid line	1/2 in. ACR
46 (150)	Discharge line (horizontal)	5/8 in. ACR
	Discharge line (vertical)	1/2 in. ACR
	Liquid line	1/2 in. ACR

All refrigerant pipes must be straight ACR to have 565 psig or above MWP.
The Equivalent Length of 1/2 in. OD discharge line pipe should be kept to less than 18 m (60 ft).
The Total Equivalent Length of discharge line should be less than 46 m (150 ft) to prevent an excessive hot gas pressure drop which can increase the discharge pressure during hot summer days.
To have a Total Equivalent Length of 61 m (200 ft), the load must be reduced by 5%.

Condenser

Install and pipe the condenser in accordance with the provided instructions.

Flooded Receiver

Install the flooded receiver in accordance with the instructions included with the kit.

NOTE: Install a 3/8-in. service port on the liquid line outlet of the flooded receiver, approximately 152 mm (6 in.) downstream of the service port.

Condensate Pump

⚠CAUTION

CONDENSATE DAMAGE

- Do not exceed the lift or the run length of the drain system.
- To prevent equipment damage from condensate, do not leave the condensate drain line coiled inside the cooling unit. Route the condensate drain line out the top of the cooling unit before operation.

Failure to follow these instructions can result in injury or equipment damage.

NOTICE

WATER DAMAGE

Failure to properly route condensate drain line before operation could result in water damage.

Failure to follow these instructions can result in equipment damage.

NOTICE

COMPLIANCE REQUIREMENT

The installation must comply with local plumbing codes.

Failure to follow these instructions can result in equipment damage.

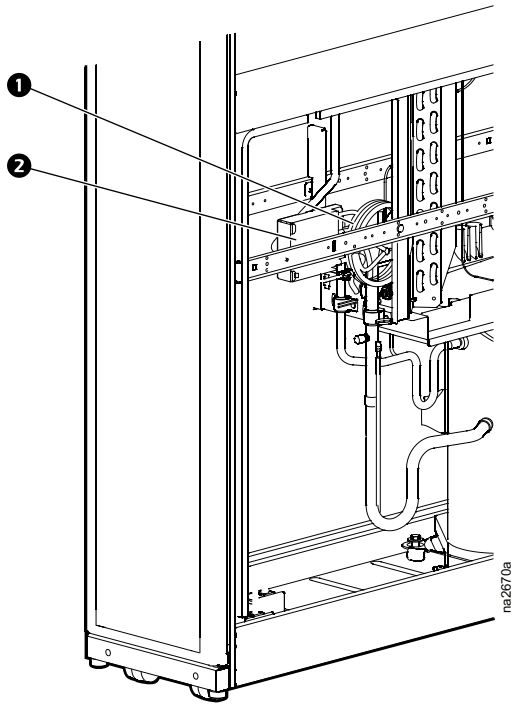

The condensate pumps ❷ are factory-wired and piped internally to the condensate pan. The pumps are capable of moving liquid a maximum of 15.2 m (50.0 ft), which may include a maximum lift of 4.9 m (16.0 ft) as measured from floor level. For example, if your lift is 3 m (10 ft), you only have 12.2 m (40.0 ft) of usable run remaining. The pumps also use on-board condensate high level float switches, which are wired into the alarm input for local and remote alarm capabilities.

Condensate Pump Drain Connection

Sufficient PVC drain line ❶ is supplied to route the drain to the outside of the equipment. Provide additional drain line at installation to allow routing to a remote drain.

Route the Condensate Pump Drain Line

Route the condensate drain line through the top or the bottom of the equipment to an appropriate drain.

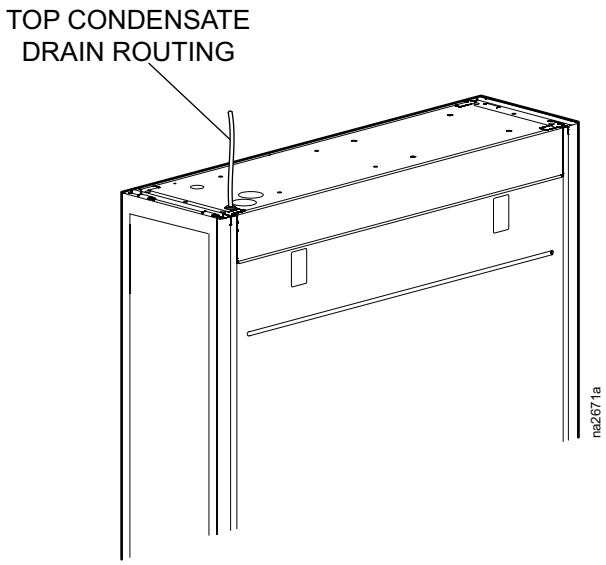

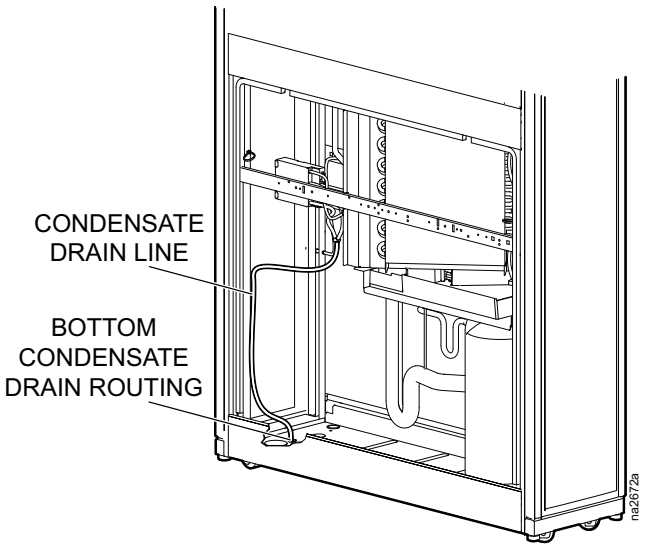

Electrical Connections

⚠⚠DANGER

HAZARD OF ELECTRIC SHOCK, EXPLOSION, OR ARC FLASH

- Apply appropriate personal protective equipment (PPE) and follow safe electrical work practices.
- This equipment must be installed and serviced by qualified and trained personnel only.
- Turn off all power supplying this equipment before working on or inside the equipment.
- Replace all devices, doors, and covers before turning on power to this equipment.

Failure to follow these instructions will result in death or serious injury.

⚠⚠DANGER

HAZARD OF ELECTRIC SHOCK, EXPLOSION, OR ARC FLASH

Potentially dangerous and lethal voltages exist within this unit. More than one disconnect switch may be required to energize or de-energize this equipment. Observe all cautions and warnings.

Failure to follow these instructions will result in death or serious injury.

⚠⚠WARNING

ELECTRICAL HAZARD

- Electrical service must conform to local and national electrical codes and regulations.
- The equipment must be grounded.

Failure to follow these instructions can result in death, serious injury, or equipment damage.

NOTE: FOR INSTALLATION IN CHINA ONLY - 至少需要一个不小于3mm触点开距的全极断开装置，以便对此设备进行通电和断电。

The following electrical connections are required in the field:

- Controls (customer interface connections, Network Management Card)
- Communication (A-Link, Building Management System)
- Power to the Uniflair Direct Expansion InRow Cooling unit (single-phase plus ground)
- Power to flooded receiver heater



See the electrical diagram (located on the electrical box) for all electrical connections.



See the equipment name plate for voltage and current requirements.

All low-voltage connections, including data and control connections, must be made with properly insulated wires. Low-voltage wiring must be insulated based on the wiring with which it is routed. The low-voltage connections must have 300-V minimum insulation.

NOTE: A power disconnect switch is required to isolate each unit for maintenance and servicing.

Control Connections

NOTE: Wire all low voltage input and output connections as Class 2 circuits.

Depending on the configuration, additional control connections may be required for the A-Link remote communications through Network Management Card support or traditional equipment-monitoring software.

Customer Interface Connections

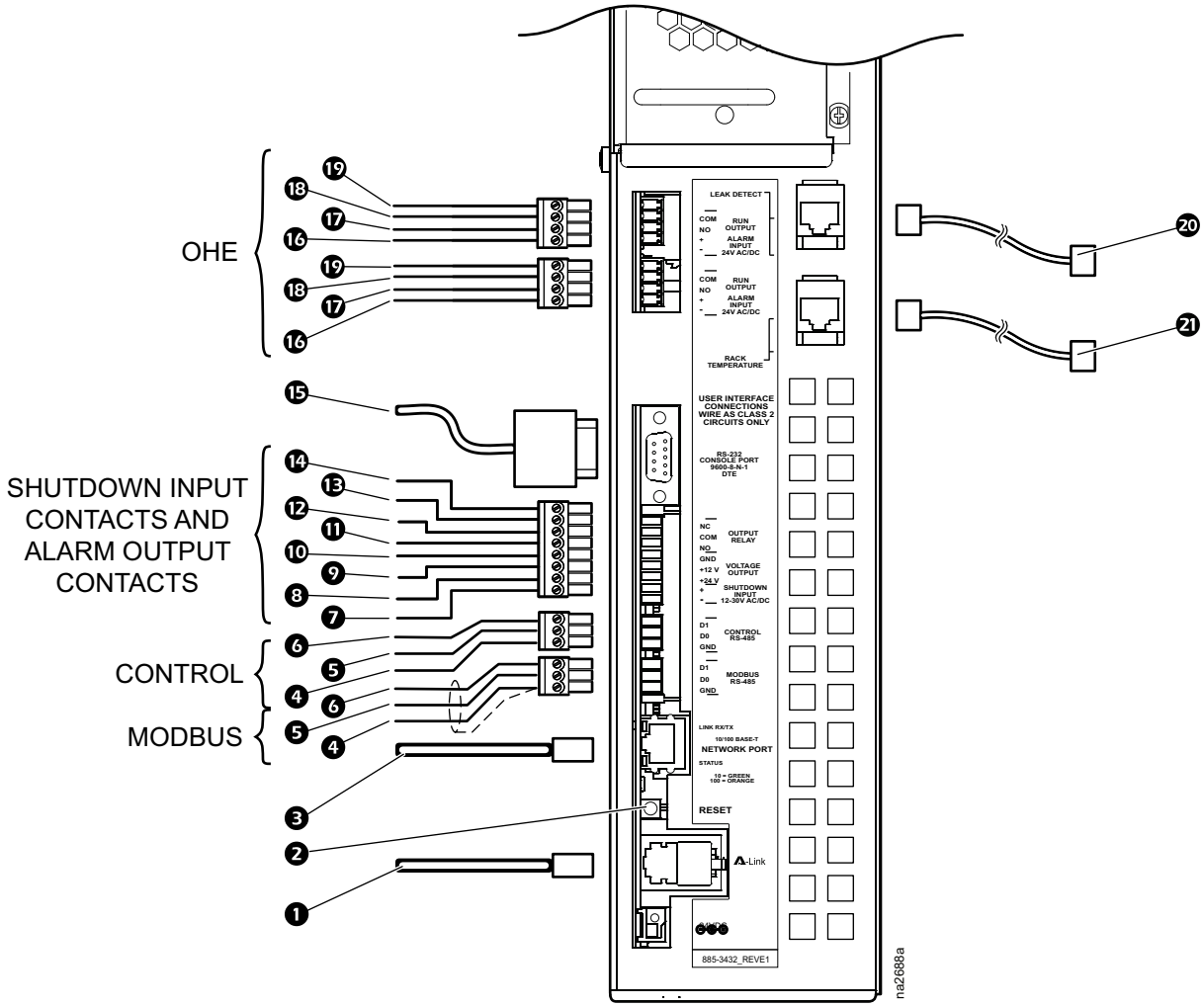

Item	Description	Item	Description
❶	A-Link ports: Pin 1 = High; pin 2 = Low; Pins 3,6 = Perf Power; Pins 4, 5 = Ground	⓬	NO (normally open contact)
❷	Reset button	⓭	COM (common contact)
❸	Network port	⓮	NC (normally closed contact)
❹	Shield/ground	⓯	RS-232 console port
❺	RTRX(+)	⓰	OHE (outdoor heat exchanger) alarm input - (not used)
❻	RTRX(-)	⓱	OHE alarm input + (not used)
❼	Shutdown –	⓲	OHE COM (optional*)
❽	Shutdown +	⓳	OHE NO port (optional*)
❾	24 VDC (bias)	⓴	Leak detector port (AP9325)
❿	12 VDC (bias)	㉑	Remote temperature sensor
⓫	Return (bias)		

*To avoid unnecessary condenser operation when the ambient temperature exceeds 43°C (110°F), connect these leads.

Form C Alarm Contacts and Shutdown Input

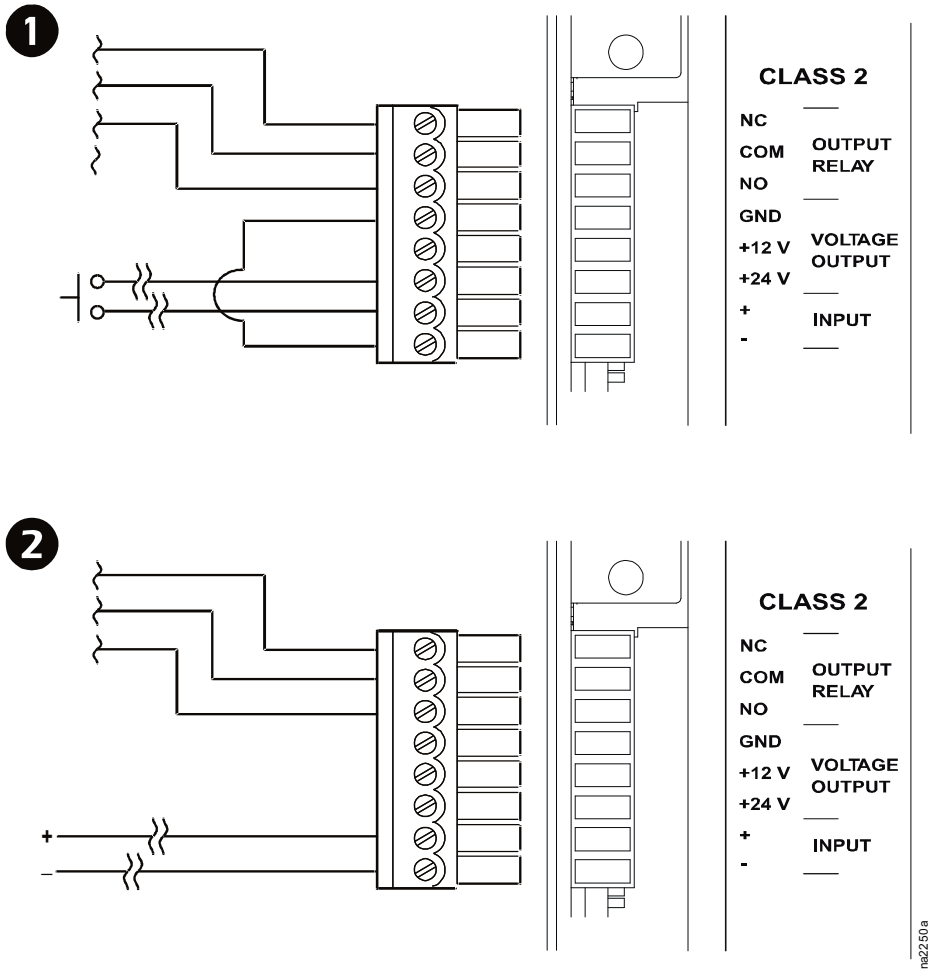

A relay internal to the user interface is controlled by a user-defined alarm (for example, malfunctioning fans). Before an alarm condition, the signal on the COM (common) terminal is routed to the NC (normally closed) terminal. When the alarm is activated, the relay is energized, causing the signal on the COM terminal to be routed to the NO (normally open) terminal. The NO and NC terminals could be connected to remote indicator lights, a warning buzzer, or another device to alert an operator to the presence of an alarm condition.

A remote disconnect switch can be connected to the shutdown inputs as shown.

NOTE: Either +12 VDC or +24 VDC can be used to power the remote disconnect.

Network Port

The network port allows communication from the cooling unit to the network.

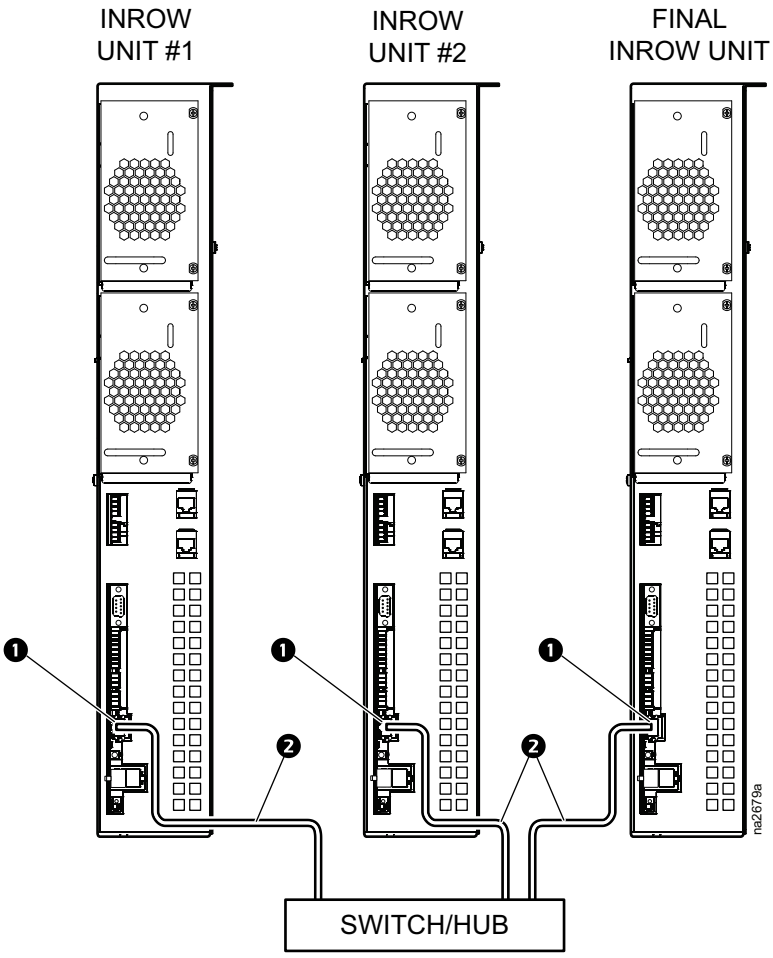

Item	Description
❶	Network port
❷	LAN cable (10/100 Base-T)

Communication Connections

A-Link Connections

The A-Link bus connection allows multiple InRow cooling units (up to twelve) to communicate with one another. Only one InRow cooling unit must be defined through the display interface; other InRow cooling units are numbered automatically.

To enable the InRow units to work as a group, link them using the supplied cables, or CAT-5 cables with RJ-45 connectors. A terminator (150 Ohm, 1/4 W) is installed in the A-Link port, and must remain inserted into the A-Link ports of the first and final InRow units only.

The maximum wire length for the entire group may not exceed 1000 m (3280 ft).

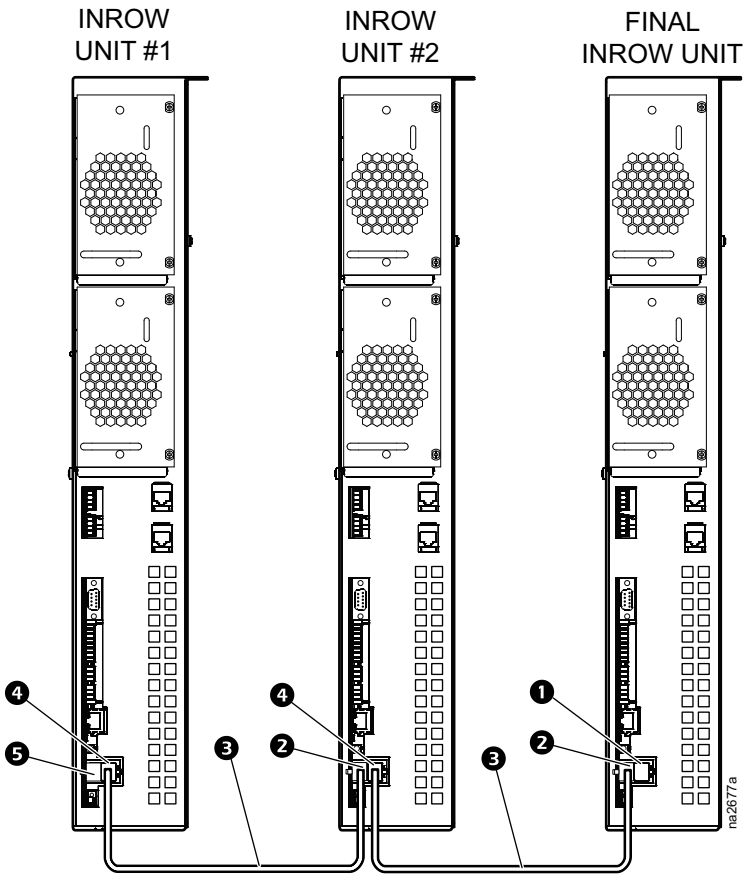

Item	Description
❶	A-Link out port (with provided RJ-45 terminator)
❷	A-Link in port
❸	A-Link cable (CAT-5 Ethernet cable)
❹	A-Link out port
❺	A-Link in port (with provided RJ-45 terminator)

Building Management System (BMS)

The Modbus interface allows each InRow cooling unit to communicate with the BMS. Use a three-wire cable to connect each cooling unit in turn. Wire a 150 Ohm, 1/4-W terminator resistor (included) into the MODBUS master and the final cooling unit between Modbus D0 and Modbus D1.

MODBUS master and the final cooling unit between Modbus D0 and Modbus D1. Each cooling unit has a three-wire Modbus terminal on the user interface. Use a connector with screw terminals to allow wiring to be attached.

See Customer Interface Connections, page 33.

For information on setup of Modbus parameters, see the *InRow DX Operation and Maintenance Manual*.

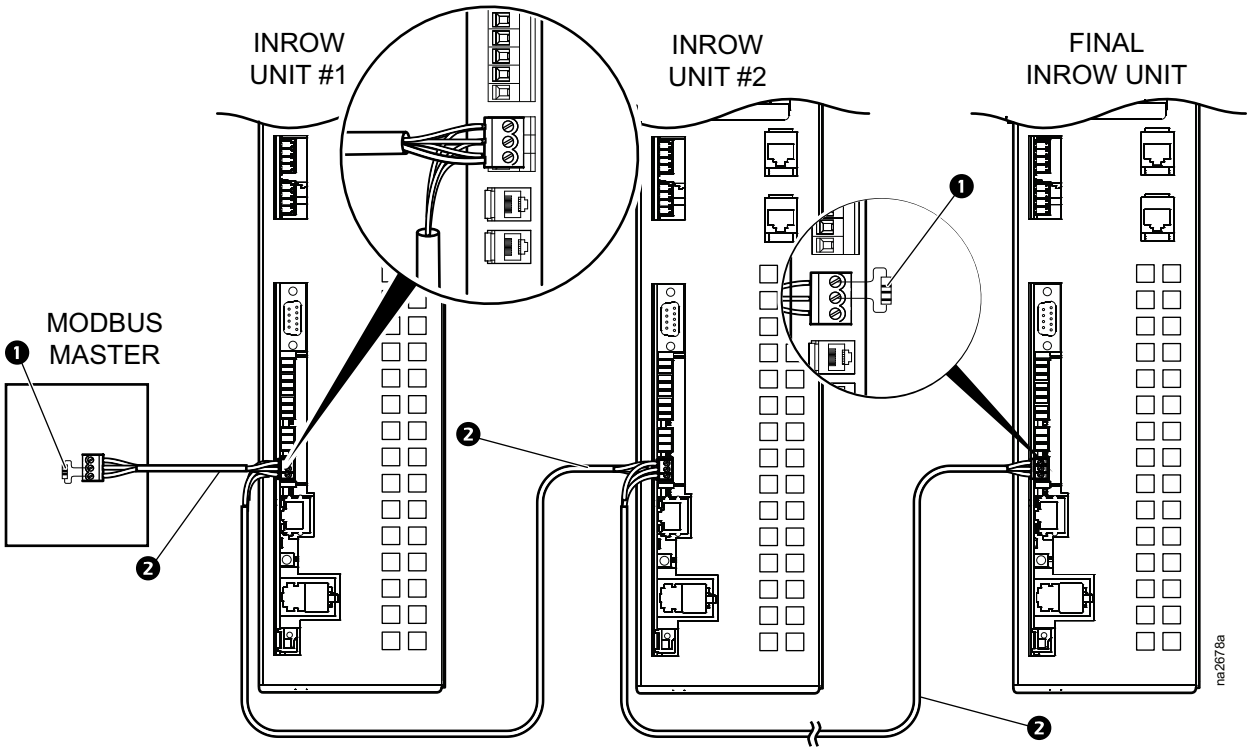

Item	Description
1	Termination resistor (provided)
2	Modbus cable (RS-485)

Leak Sensor—Optional

Install one leak sensor (AP9325). To extend the leak sensor length, add up to three additional leak sensors (AP9326).

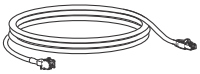

1. Connect the leak sensor to the equipment using the leak detector port as shown
2. Position the leak detector inside or outside the equipment.

   NOTE: Install leak sensors on a clean surface, and do not allow them to touch metal that is in an air stream.
3. Route the leak sensor to the outside through either the bottom plate or the door.
4. Secure the leak sensor wire to surfaces using cable ties and cable tie holders (provided with the leak detector).

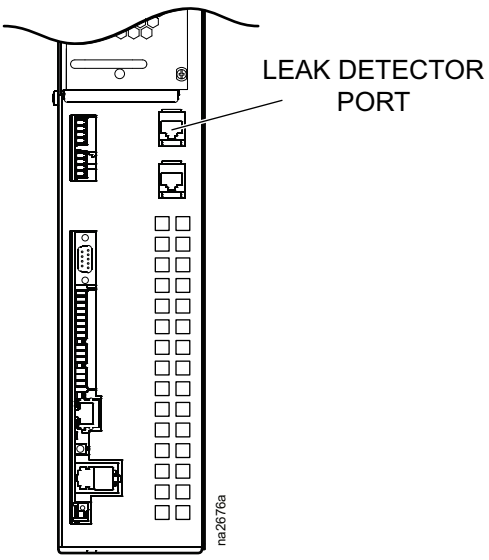

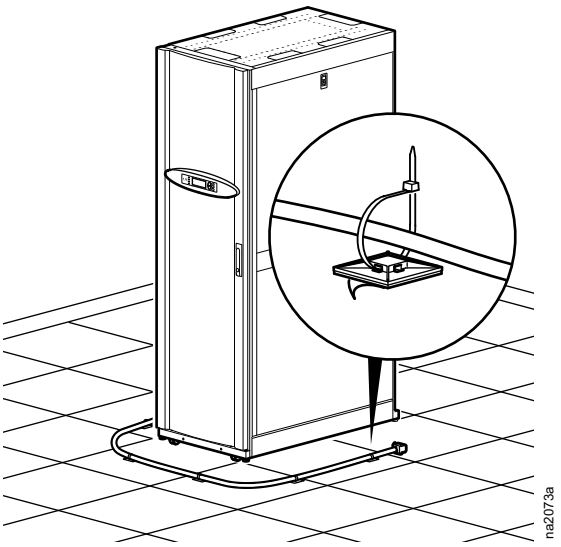

Rack Air Temperature Sensors

The rack air temperature sensors control unit airflow and ensure an adequate supply of cooling air to the server racks in the data center. The unit is supplied with one external rack air temperature sensor These sensors are attached on the unit front door.

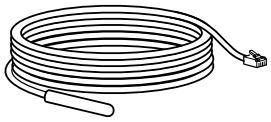

Installation

NOTE: Rack temperature sensor installation is not required if the equipment operates in Rack Air Containment System (RACS) or Hot Aisle Containment System (HACS) mode. The Uniflair InRow configuration requires temperature sensor installation.

1. Insert the rack temperature sensor connector in the temperature sensor port on the customer interface panel.
   a. For a top installation, push the rack temperature sensor through the wire channel located at the top of the unit in the left hand side above the electrical box.
   b. For a bottom installation, route the sensor through the wire clamps along the electrical panel and then push the sensor through the customer access inlet in the bottom of the unit.
2. Route the sensor through either the top or the bottom of the adjacent server rack.

3. Secure the temperature sensor cable to the front door of the adjacent server rack at multiple locations using the provided wire clips as shown.

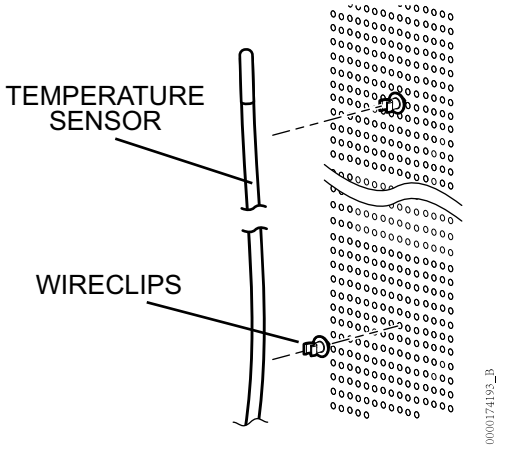

NOTE: Remote rack sensors must be installed for proper operation.

The sensors should be located on racks that are adjacent to the cooling unit. The optimum position of the rack temperature sensors will vary from installation to installation but should be located in close proximity to fan-cooled IT equipment to ensure accurate readings. Servers most likely to have insufficient or inadequately cooled cooling air due to the recirculation of hot air from the hot aisle include:

- Servers positioned at the top of a rack
- Servers positioned at any height in the last rack at an open end of a row
- Servers positioned behind flow-impairing obstacles such as building elements
- Servers positioned in a bank of high-density racks
- Servers positioned next to racks with Air Removal Units (ARU)
- Servers positioned very far from the equipment
- Servers positioned very close to the equipment

Power Connections

Wiring Configurations

⚠⚠DANGER

HAZARD OF ELECTRIC SHOCK, EXPLOSION, OR ARC FLASH

- Apply appropriate personal protective equipment (PPE) and follow safe electrical work practices.
- This equipment must be installed and serviced by qualified and trained personnel only.
- Turn off all power supplying this equipment before working on or inside the equipment.
- Replace all devices, doors, and covers before turning on power to this equipment.

Failure to follow these instructions will result in death or serious injury.

⚠⚠WARNING

ELECTRICAL HAZARD

- Electrical service must conform to local and national electrical codes and regulations.
- The equipment must be grounded.

Failure to follow these instructions can result in death, serious injury, or equipment damage.

⚠WARNING

HAZARD TO EQUIPMENT OR PERSONNEL

All work must be performed by Schneider Electric qualified and trained personnel.

Failure to follow these instructions can result in death, serious injury, or equipment damage.

NOTE: To ease installation and future removal of the equipment for repairs, use flexible conduit for the power wiring.

Top Routing

1. Remove the electrical junction box cover.
2. Route electrical cabling into the electrical junction box as shown.
3. Secure the incoming cable with a standard 20 mm (3/4-in) nominal conduit strain relief (not provided).
4. Connect the power wiring to the terminals as shown and torque the screws to the value shown on the label.
5. Reinstall the electrical junction box cover.

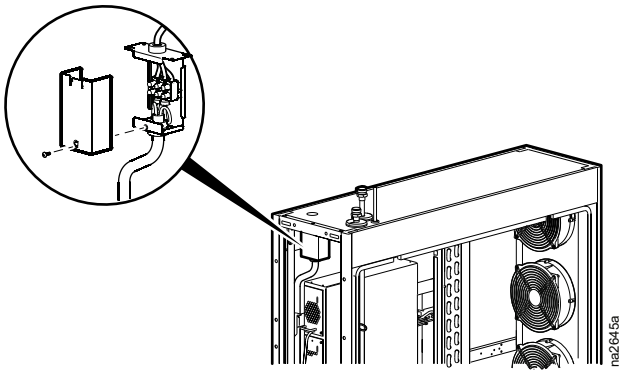

Bottom Routing

1. Carefully clip all the cable clamps that secure the electrical cable to the cabinet frame. Remove the cable clamps from the cabinet and discard.
2. Remove two screws securing the electrical junction box to the underside of the cabinet top.
3. Remove the plug from the cabinet floor and insert it in the cabinet top.
4. Turn the electrical junction box over and secure it to the bottom of the cabinet using the screws removed in step 1.

See Bottom Piping and Power Access Locations, page 18.

5. Secure the electrical cable to the cabinet frame using new cable clamps (supplied).
6. To connect electrical power, follow the steps for top routing.

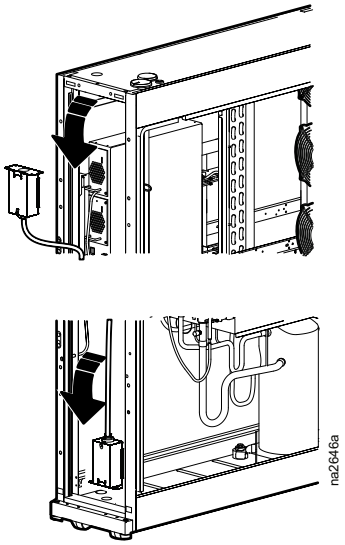

Flooded Receiver Heater

The flooded receiver is equipped with a heater to keep the refrigerant warm during extremely cold weather conditions. The heater requires 208–240/1~/60 Hz electrical service to be wired to the condenser electrical panel.

See submittal drawings for details.

NOTE: Observe all local and national electrical codes.

Charging the Refrigeration System

Adding a Holding Charge

NOTICE

REFRIGERANT SYSTEM DAMAGE

- Failure to charge with liquid refrigerant may damage the system.
- Charge the equipment with R410A refrigerant only. It is the responsibility of the installing contractor to provide sufficient refrigerant for a complete system charge during start-up.
- Install a ball valve before the micron gauge to prevent damage to the micron gauge during charging.

Failure to follow these instructions can result in equipment damage.

R410A is a mixed refrigerant. When charging this equipment with mixed refrigerant, only liquid refrigerant must be charged.

IMPORTANT: Make a note of the amount of R410A used in this pre-charge.

NOTE: It is recommended that the isolation valve assembly accessory (ACAC10022) be installed to facilitate moving the equipment after installation.

1. If installed, open the two shutoff valves above or below the equipment. Do not close the valves unless there is a need to remove the incoming piping.
2. Pressurize the system to 17.2 bar (250 psi) with nitrogen. Leave the system pressurized for 24 hours (recommended), and then check the gauges for a drop in pressure.
3. Use a deep vacuum pump and pull the first vacuum down to 750 microns. Wait for an hour (vacuum should not rise above 1500 microns) and then break the vacuum with nitrogen.
4. Pull a final vacuum down to 300 microns for a minimum of 2 hours.
5. Using the charging table, calculate the total charge needed, then charge to 80% of that total.

See Charging Table, page 43.

6. Record the amount of refrigerant used so the charge can be completed later.
7. Charge with liquid R410A until the system pressure equalizes with the refrigerant canister.
   a. Apply the charge into the liquid line service port inside the equipment.
   b. Purge the refrigerant hoses and manifold set.

Charging Table

Condenser Model	Selected Ambient Temperature	Condenser Summer Charge – kg (lb)	Condenser Flooded Charge for Different Minimum Outdoor Ambient Temperatures – kg (lb)				
			4°C (40°F)	–7°C (20°F)	–18°C (0°F)	–29°C (–20°F)	–40°C (–40°F)
ACCD75214	35°C (95°F)	2.2 (4.9)	5.5 (12.1)	5.6 (12.9)	6.0 (13.3)	6.2 (13.6)	6.3 (13.9)
ACCD5214	41°C (105°F)	2.2 (4.9)	5.5 (12.1)	5.6 (12.9)	6.0 (13.3)	6.2 (13.6)	6.3 (13.9)
ACCD75215	46°C (115°F)	3.9 (8.5)	9.6 (21.1)	10.2 (22.4)	10.5 (23.1)	10.7 (23.6)	10.9 (24.1)
ACCD75216	35°C (95°F)	1.4 (3.0)	3.1 (6.8)	3.3 (7.2)	3.4 (7.4)	3.4 (7.6)	3.5 (7.7)
ACCD75218 ACCD75220*	40°C (104°F)	1.4 (3.0)	3.1 (6.8)	3.3 (7.2)	3.4 (7.4)	3.4 (7.6)	3.5 (7.7)
ACCD75217 ACCD75219	46°C (115°F)	2.3 (5.0)	6.1 (13.5)	6.5 (14.4)	6.7 (14.8)	6.9 (15.2)	7.0 (15.5)

*ACCD75220 is CCC certified for use in China.

NOTE: ACCD75216, ACCD75217, and ACCD75218 are CMIM compliant.

Total Charge - RD Unit Charge + Condenser Summer Charge + Condenser Flooded Charge (for minimum possible ambient temperature) + Liquid R410A in liquid pipe
RD Unit Charge is 1.6 kg (3.5 lbs)
Density of liquid R410a at 105° F 260 psig is 61.0 lbm/ft^3
Cross-section area for 1/2 in. OD ACR pipe is 0.0010554 ft^2
R410A in 1/2 in. OD liquid line - Area x Length in ft x density - 0.0010554 (ft^2) x L (ft) x 61.0 (lbm/ft^3)
Liquid line charge for 1/2 inch OD ACR copper tube is 0.095 kg/m (0.0644 lb/ft)

Cross sectional area for 5/8 inch OD ACR pipe is 0.001619 ft^2
R410A in 5/8 OD liquid line - Area x Length in ft x density - 0.001619 (ft^2) x L (ft) x 61.0 (lbm/ft^3)
Liquid line charge for 5/8 inch OD ACR copper tube is 0.146 kg/m (0.099 lb/ft)
Example: Calculate total R410A charge for FCB5, 25 ft long 1/2 in. OD liquid piping and minimum outdoor design temperature is –6.7°C (20°F).
Total R410A charge = 3.5 + 4.9 + 13.6 + (25 (0.0644)) = 23.6 lb.

Compressor Oil Charge

Adding Compressor Oil

Depending upon piping run lengths, the system may require an additional charge of oil at start-up. The installing contractor shall provide adequate compressor (PVE).

Worldwide Customer Support

Customer support for this product is available at no charge in any of the following ways:

- Visit the Schneider Electric Web site to access documents in the Schneider Electric Knowledge Base and to submit customer support requests.
  - www.se.com (Corporate Headquarters)

    Connect to localized Schneider Electric websites for specific countries, each of which provides customer support information.
  - www.se.com/support/

    Get global support by searching the Schneider Electric Knowledge Base and using esupport.
- Contact the Schneider Electric Customer Support Center by telephone or e-mail.

  Go to **www.se.com > Support > Contact Support** to find contact information for country-specific centers.

For information on how to obtain local customer support, contact the representative or other distributors from whom you purchased your product.

Schneider Electric
35 rue Joseph Monier
92500 Rueil Malmaison
France

+ 33 (0) 1 41 29 70 00

www.schneider-electric.com

As standards, specifications, and design change from time to time, please ask for confirmation of the information given in this publication.

© 2013 – 2023 Schneider Electric. All rights reserved.

990-3211F-001