# *Volt DSC10*
# *USB-C 10 Port Desktop Charging Station*
## *with Dividers and 10 LED USB-C Charging Cables*

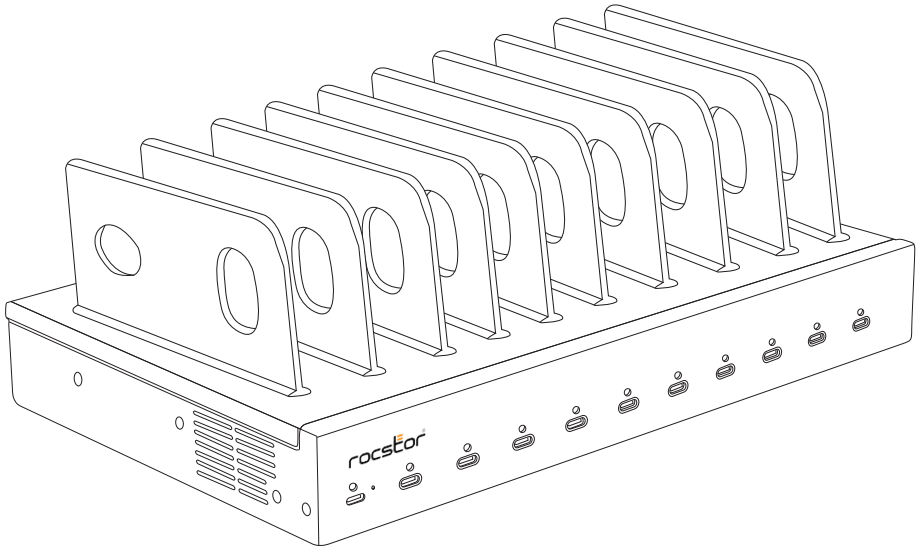


# User Manual
PN: VT0V003-01

© 2024, Rocstor, Inc; acknowledges the following trademarks for company names or products mentioned within the Rocstor site, portal pages and Articles/text/manuals: Rocstor, is registered trademarks of Rocstor, Inc. Apple, the Apple logo, iPhone, iPad, and Mac are trademarks of Apple Inc., registered in the U.S. and other countries. Windows and Microsoft are trademarks of Microsoft Corporation, registered in the U.S. and other countries. Surface is a trademark of Microsoft Corporation. Chromebook is a trademark of Google LLC.USB, USB Type-CTM and USB-CTM are trademarks of USB Implementers Forum.

# Product Features

- Charge and organize up to 10 USB-C devices simultaneously with 1000W total power output and up to 100W Power Delivery per port, ideal for laptops, tablets, smartphones, and other USB-C devices.
- Supports advanced charging protocols including PD 3.0, QC 5.0, PPS, FCP, AFC, QC 3.0, and Apple 2.4A for fast, intelligent, and optimized charging compatibility.
- Features smart charging notification LED lights that provide clear visual indication of charging and power status for each connected device.
- Includes 10 USB-C to USB-C 0.5m coiled cables with integrated LED indicators for convenient, organized charging and cable management.
- Integrated device dividers securely separate and organize connected devices while charging.
- Built with a rugged all-metal enclosure for superior durability, heat dissipation, and long-term reliability in demanding environments.
- Advanced protection safeguards against over-current, over-voltage, over-temperature, and short-circuit conditions to protect connected devices.
- Includes security mounting brackets for enhanced installation flexibility and theft deterrence in classrooms, offices, healthcare facilities, and shared workspaces.
- ETL Certified to meet recognized safety and performance standards.
- Compact desktop design measuring 13.39" x 8.27" x 1.81" (340 x 210 x 46 mm), making it ideal for desks, counters, carts, and charging stations.

# Power Specification

| | |
|---|---|
| **Input:** | AC 100-240V 12A 50/60Hz |
| **USB-C Output** | DC 5V3A/9V3A/12V3A/15V3A/25V5A (PD3.0/QC5) (Max) |
| **Total Power** | 1000W max |

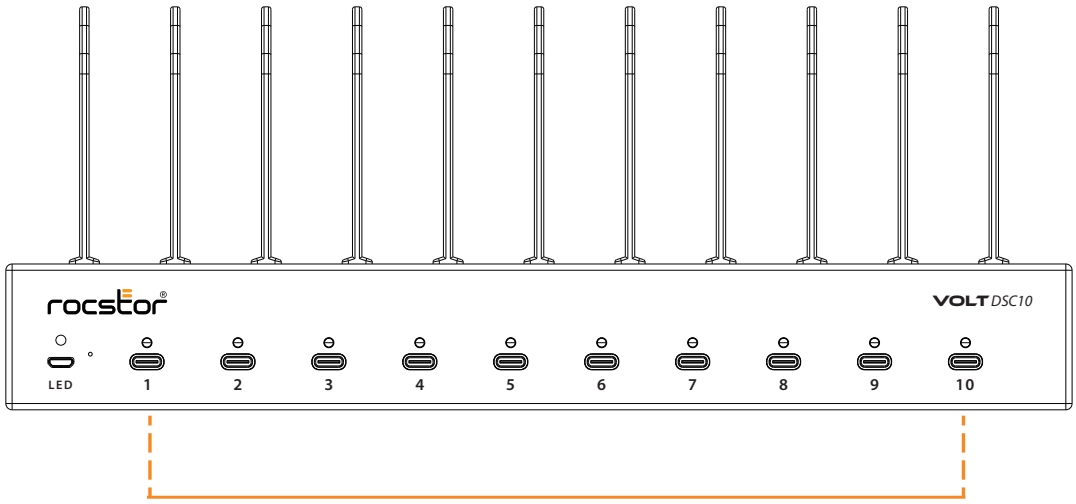


**Charging up to ten 100W devices**

# Product Diagram

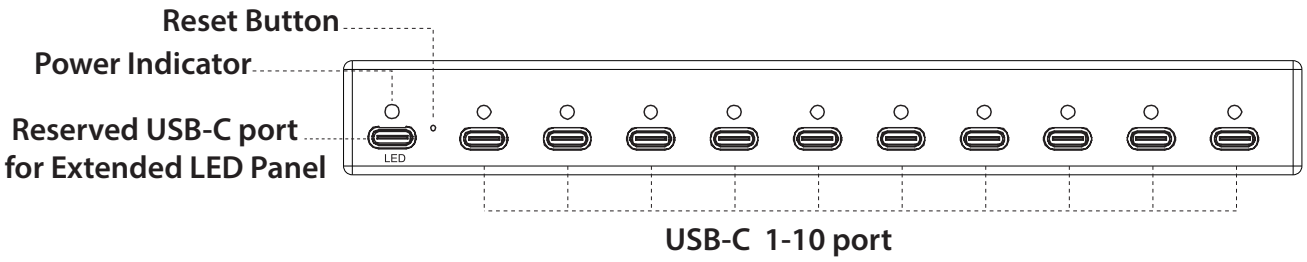


## Volt DSC10 Power Delivery Allocation Chart - 1000W Model

Port quantity is calculated from the 1000W total power budget and capped at the DSC10 maximum of 10 ports.

| Total Power / Output Power | 100W | 65W | 60W | 45W | 35W | 5W |
|---|---|---|---|---|---|---|
| 1000W | 10-Port | - | - | - | - | - |

## USB-C PD Output Profiles

| Voltage / Current | Max Power |
|---|---|
| 5V / 3A | 15W |
| 9V / 3A | 27W |
| 12V / 3A | 36W |
| 15V / 3A | 45W |
| 20V / 3.25A | 65W |
| 20V / 5A | 100W |

**Intelligent Charging:**
Each connected device negotiates its required USB-C PD profile. The allocation controller automatically distributes the available 1000W total system power across active ports to maximize charging efficiency for laptops, tablets, smartphones, Chromebooks, and other USB-C devices.

### External LED Charging Indicator

The Volt DSC10 is equipped with an External LED Charging Indicator that can be conveniently mounted on a wall or desktop surface for quick visual monitoring. This external indicator features 10 individual LED lights, each corresponding to one device bay, allowing users to instantly check the charging status of all connected devices at a glance. A green light indicates that the device has fully charged, while a red light signifies that charging is still in progress. The indicator connects easily to the first port (far left) of the DSC10, providing a simple and reliable way to monitor charging activity without opening the unit.

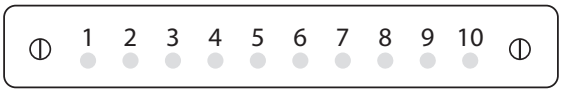

# Operation Instruction

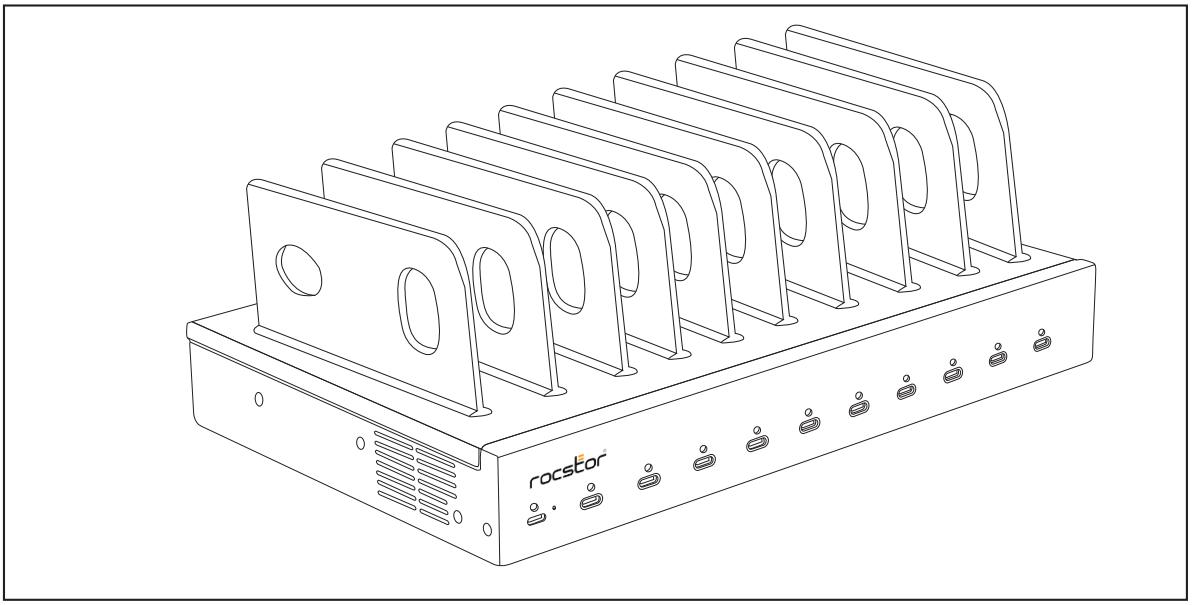


1. **Power Connection:** Simply insert the charger's power plug into an AC outlet, ensuring a secure connection between the plug and the outlet for reliable power flow.

2. **Device Connection:** Use a USB-C cable to connect your device to the charger's USB-C port. Ensure the cable is firmly attached to prevent any interruptions in the charging process.

3. **Initiating Charging:** Once your device is connected to the charger, charging will commence automatically. Keep an eye on the device's screen for the charging indicator, verifying the charging status.

4. **Charging Completion:** When your device reaches full charge, the charger will halt charging automatically. Now, safely disconnect your device from the charger, and it's ready for use.

# Unit Dimensions (mm-inches)

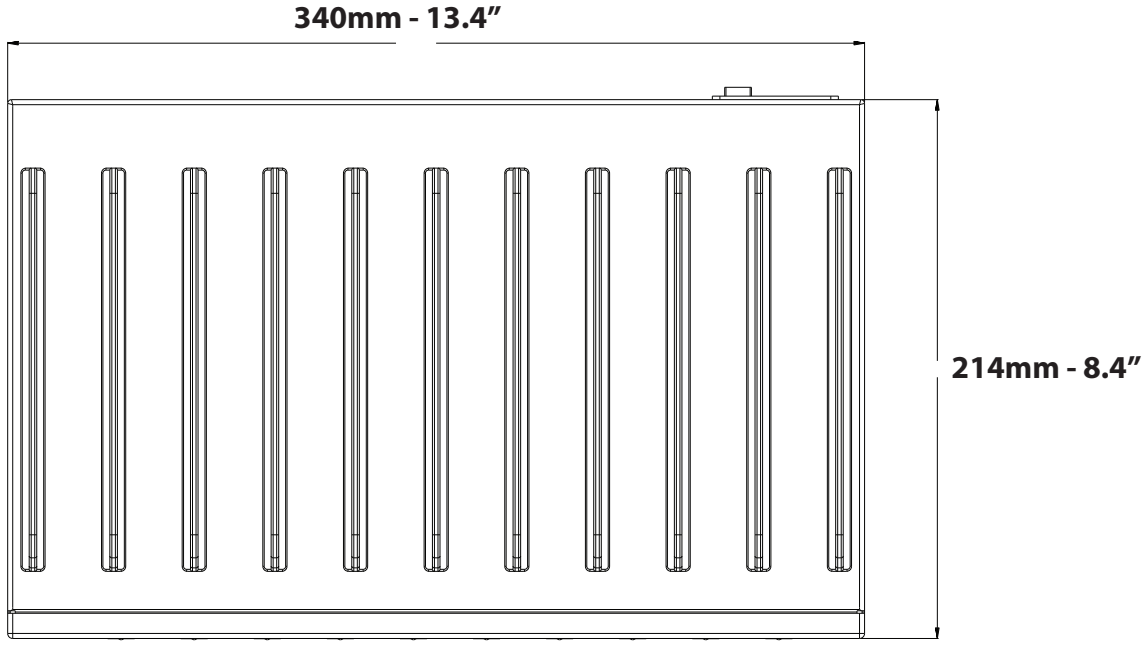


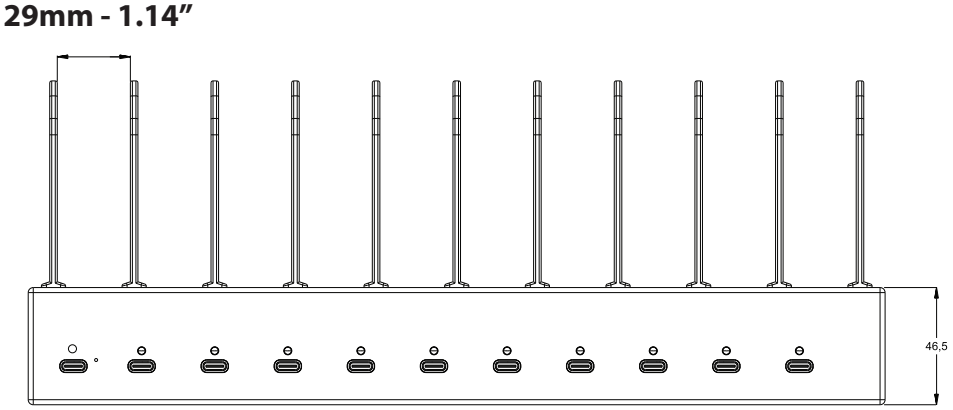


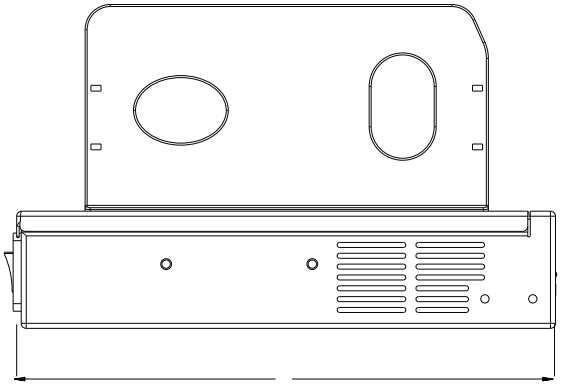

# Connecting Your 10-Port USB-C Charger to the App

## Remote Monitoring

To control and monitor the status of your charging devices, please follow the steps below to download & install the mobile app:

## 1- Download and Install

**Step 1:** Open the App Store on your device:
open the appropriate app store on your device. Apple users should access the Apple App Store, Android users should open the Google Play Store.

**Step 2:** Search for "**innovatecharger**"
In the search bar of the app store, type "innovatecharger" and press enter. The "innovatecharger App" should appear in the search results.

**Step 3:** Download and Install
Tap on the Innovatecharger App from the search results to view its details. Then, click Download or Install to begin the installation.

You can also download the APP by scanning the QR code below:

（for iOS）

（for Android）

## 2- Open the App

Upon launching the application for the first time, you will be prompted to either sign in with an existing account or create a new one. Please follow the on-screen instructions to complete the setup process.

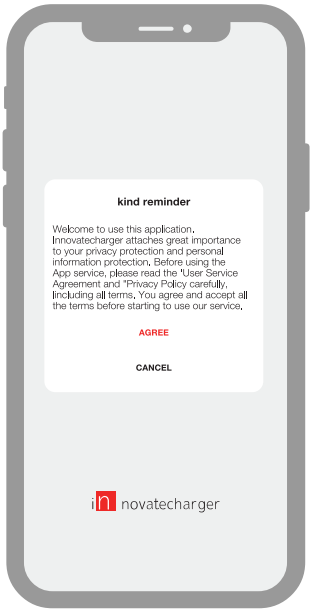


## 3- Sign In or Create an Account

Upon initial launch of the application, you may be prompted to either sign in with an existing account or create a new one. Please follow the on-screen instructions to complete this step.

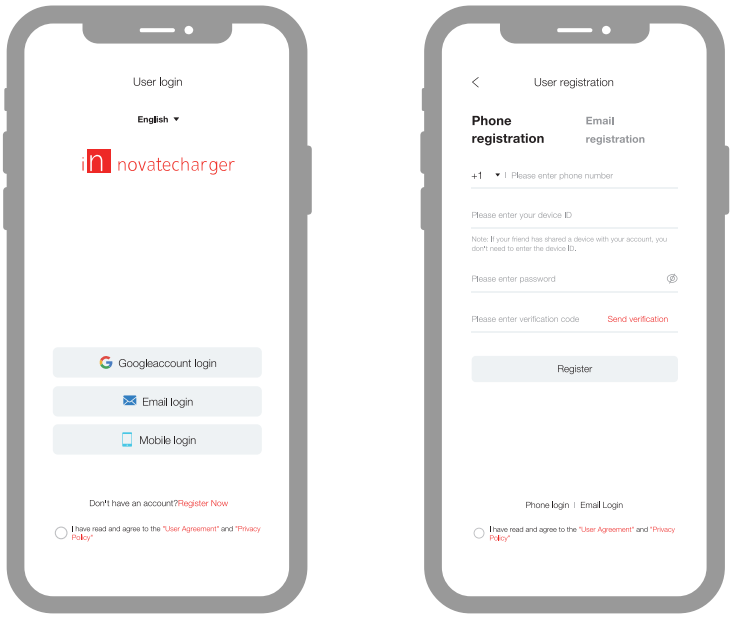

# Connecting Your 10-Port USB-C Charger to the App

To control and monitor the status of your charging devices, please follow the steps below to connect your charger to the mobile app:

**1- Reset the Device**
- Before initiating the binding process, press and hold the Reset button on your charger for 5 seconds.
- This step is required to enable pairing mode.

**Note:** You may need a small pin or pointed object to press the Reset button, as it may be recessed for safety. (Please refer to the unit diagram)

**2- Scan the QR Code**
- After resetting the device, use the mobile app to scan the QR code located on the charger or in the user guide.
- The app will begin the binding process automatically.

**3- Connect to LVS00001 Wi-Fi**
- During binding, the app will prompt you to select a Wi-Fi network.
- Choose the network named LVS00001 from the list and continue with the binding process.

**4- Enter Your Home or Office Wi-Fi Credentials**
- After selecting LVS00001, the app will return to the Wi-Fi settings screen.
- Manually enter the Wi-Fi name (SSID) and password of the network closest to your 16-port charger.

**Important:** The charger only supports 2.4GHz Wi-Fi networks. It is not compatible with 5GHz or dual-band-only networks.

Need Help? Refer to your Wi-Fi router's user manual to check if your network is broadcasting at 2.4GHz or to enable/switch to 2.4GHz mode if necessary.

**Note:** Ensure the Wi-Fi signal is strong where the charger is located.

**5- Complete the Binding**
- Wait for the app to finish the connection process.
- Once complete, the app will display a confirmation message indicating the binding was successful.

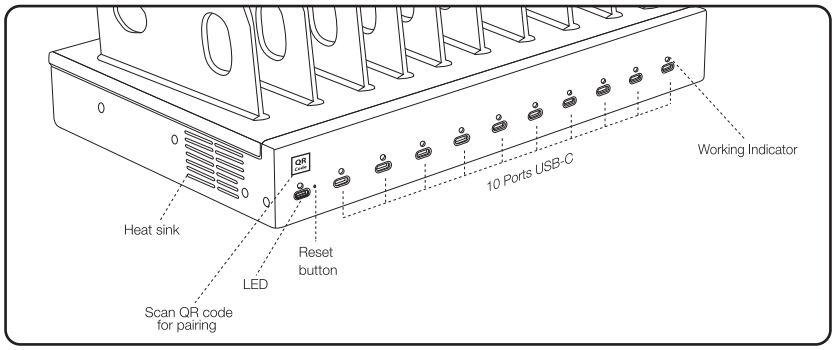

## Read All Instructions Prior to Using The Charging Cabinet

This product must only be used for its intended purpose in accordance with these operating instructions. Failure to observe the following notices could result in fire, injury, death by electric shock or equipment damage.

Always turn OFF the power to the product before unplugging or moving it.

Do not unplug by pulling on the cable.

Do not unplug the power cord from the outlet when your hands are wet.

Do not use cables that are damaged.

Do not place objects over the power cable.

Do not plug the cable into an extension cord.

Keep the door closed and locked when in use.

Keep the cabinet away from water.

Do not place the cart close to flammable liquids or gasses.

This product is designed to be used indoors only.

Adult operation and supervision is needed at all times.

Do not allow anyone to sit, stand or climb on the cabinet.

Do not place heavy objects on top of the cabinet.

Do not block the ventilation holes.

## ATTENTION :

Ce produit ne doit être utilisé que dans le but pour lequel il a été conçu conformément aux instructions de service.  instructions . Le non-respect des avis suivants peut entraîner un incendie, des blessures, la mort en  choc électrique ou dégâts matériels

- Mettez toujours les produits hors tension avant de brancher IN ou OUT.
- Ne débranchez pas le cordon d'alimentation de la prise lorsque vos mains sont humides.
- N'utilisez pas de câbles endommagés.
- Ne débranchez pas le câble dans une rallonge.
- Gardez la porte fermée et verrouillée lors de son utilisation.
- Ce produit est conçu pour être utilisé à l'intérieur uniquement.
- Ce produit n'est pas conçu pour être utilisé par un enfant ou un étudiant.
- Seul le fonctionnement et la supervision par un adulte doivent déplacer ce produit.
- Ne laissez personne poser, monter ou monter sur le produit.
- Déplacez le produit avec prudence.
- Gardez le produit à l'abri de l'eau.
- Maintenir les orifices de ventilation dégagés pour la circulation de l'air.
- N'utilisez pas le produit pour stocker des liquides ou des produits de nettoyage.
- Déconnectez le câble d'alimentation du mur avant de déplacer l'unité principale.
- Fixation du meuble par des supports au mur.



Class I Equipment. This equipment must be earthed. The power plug must be connected to a properly wired earth ground socket outlet. An improperly wired socket outlet could place hazardous voltages on accessible metal parts.



Equipement de classe I. Cet équipement doit être mis à la terre.La fiche d'alimentation doit être connectée à une prise de terre avec terre.Un socle de prise de courant incorrectement câblé peut créer des tensions dangereuses pour les pièces métalliques accessibles.

## LIMITED WARRANTY

This Limited Warranty is provided by Rocstor, Inc. (hereinafter: Rocstor) for all lines of products.

## General Terms

EXCEPT AS EXPRESSLY SET FORTH IN THIS LIMITED WARRANTY, ROCSTOR MAKES NO OTHER WARRANTIES OR CONDITIONS, EXPRESS OR IMPLIED, INCLUDING ANY IMPLIED WARRANTIES OF MERCHANTABILITY AND FITNESS FOR A PARCTICULAR PURPOSE. ROCSTOR EXPRESSLY DISCLAIMS ALL WARRANTIES AND CONDITIONS NOT STATED IN THIS LIMITED WARRANTY. ANY IMPLIED WARRANTIES THAT MAY BE IMPOSED BY LAW ARE LIMITED IN DURATION TO THE LIMITED WARRANTY PERIOD. SOME STATES OR COUNTRIES DO NOT ALLOW A LIMITATION ON HOW LONG AN IMPLIED WARRANTY LASTS OR THE EXCLUSION OR LIMITATION OF INCIDENTAL OR CONSEQUENTIAL DAMAGES FOR CONSUMER PRODUCTS. IN SUCH STATES OR COUNTRIES, SOME EXCLUSIONS OR LIMITA TIONS OF THIS LIMITED WARRANTY MAY NOT APPLY TO YOU.

This Limited Warranty applies to the Rocstor branded hardware products sold by or leased from Rocstor, Inc., its worldwide subsidiaries, affiliates, authorized resellers, or country distributors (collectively referred to in this Limited Warranty as "Rocstor") with this Limited Warranty. This Limited Warranty is applicable in all countries and may be enforced in any country where Rocstor or its authorized service providers offer warranty service subject to the terms and conditions set forth in this Limited Warranty. However, warranty service availability and response times may vary from country to country and may also be subject to registration requirements in the country of purchase.

Rocstor warrants that the Rocstor hardware product and all the internal components of the product that you have purchased or leased from Rocstor are free from defects in materials or workmanship under normal use during the Limited Warranty Period. The Limited Warranty Period starts on the date of purchase or lease from Rocstor. Your dated sales or delivery receipt, showing the date of purchase or lease of the product, is your proof of the purchase or lease date. You may be required to provide proof of purchase or lease as a condition of receiving warranty service. You are entitled to warranty service according to the terms and conditions of this document if a repair to your Rocstor branded hardware is required within the Limited Warranty Period. This Limited Warranty extends only to the original purchaser or lessee of this Rocstor branded product and is not transferable to anyone who obtains ownership of the Rocstor branded product from the original purchaser or lessee.

Rocstor products are manufactured using new materials or new and used materials equivalent to new in performance and reliability. Spare parts may be new or equivalent to new. Spare parts are warranted to be free from defects in material or workmanship for thirty (30) days or for the remainder of the Limited Warranty Period of the Rocstor hardware product in which they are installed, whichever is longer.

## Rocstor's Obligation under the Limited Warranty

During the Limited Warranty Period, Rocstor will repair or replace the defective component parts or the hardware product. All component parts or hardware products removed under this Limited Warranty become the property of Rocstor. The replacement part or product takes on either the Limited Warranty status of the removed part or product or the thirty (30) day limited warranty of the spare part. In the unlikely event that your Rocstor product has a recurring failure, Rocstor, at its discretion, may elect to provide you with a replacement unit of Rocstor's choosing that is at least equivalent to your Rocstor branded product in hardware performance. Rocstor reserves the right to elect, at its sole discretion, to give you a refund of your purchase price or lease payments (less interest) instead of a replacement. This is your exclusive remedy for defective products.

**The original Limited Warranty is not extended when the product, or a part of the product, is repaired or replaced during the Limited Warranty period. Rocstor shall not be responsible or liable for backing up any data that is on a drive being returned for service**

Rocstor does not warrant that the operation of this product will be uninterrupted or error-free. Rocstor is not responsible for damage that occurs as a result of your failure to follow the instructions that came with the Rocstor branded product.

This Limited Warranty does not apply to expendable parts. This Limited Warranty does not extend to any product from which the serial number has been removed or that has been damaged or rendered defective (a) as a result of accident, misuse, abuse, or other external causes; (b) by operation outside the usage parameters stated in the user documentation that shipped with the product and/or posted on the Rocstor website; (c) by the use of parts not manufactured or sold by Rocstor; (d) as a result of normal wear; or (e) by modification or service by anyone other than (i) Rocstor, (ii) a Rocstor authorized service provider, or (iii) your own installation of end-user replaceable Rocstor or Rocstor approved parts if available for your product in the servicing country.

These terms and conditions constitute the complete and exclusive limited warranty agreement between Rocstor and you regarding the Rocstor branded product you have purchased or leased. These terms and conditions supersede any prior agreements or representations including representations made in Rocstor sales literature or advice given to you by Rocstor or an agent or employee of Rocstor-that may have been made in connection with your purchase or lease of the Rocstor branded product. No change to the conditions of this Limited Warranty is valid unless it is made in writing and signed by an authorized representative of Rocstor.

## Buyer's Obligation under the Warranty

The person requesting coverage under this warranty shall prove that he or she is the original purchaser and declares that the product has not been sold, leased, bartered or otherwise changed possession.
The buyer must notify Rocstor and show proof of notification, through any reasonable means of communication. See full street address email address and toll free phone numbers below or updated contact information are available on Rocstor.com website. The notification shall identify any defect, malfunction, or nonconformity promptly upon discovery. Rocstor will acknowledge receipt of the communication and issue a Return Merchandise Authorization (RMA) code. The buyer is obligated to securely and safely package(s) the product, preferably in the original packing materials, WITH THE RMA number, and deliver it together with a copy of the original purchase receipt and a description of the problem to the Rocstor home office. Buyer is responsible for the product until it is received by Rocstor. It is recommended that the product be insured during transportation by the sender. You must prepay any shipping charges, taxes, or duties associated with transportation of the product. In addition, you are responsible for insuring any product shipped or returned for service. You assume risk of loss during shipping.

## Limitation of Damages (Liability)

IF YOUR ROCSTOR BRANDED HARDWARE PRODUCT FAILS TO WORK AS WARRANTED ABOVE, THE ORIGINAL PURCHASER'S SOLE AND EXCLUSIVE REMEDY SHALL BE REPAIR OR REPLACEMENT. ROCSTOR'S MAXIMUM LIABILITY UNDER THIS LIMITED WARRANTY IS EXPRESSLY LIMITED TO THE LESSER OF THE PRICE YOU HAVE PAID FOR THE PRODUCT OR THE COST OF REPAIR OR REPLACEMENT OF ANY ROCSTOR HARDWARE COMPONENTS THAT MALFUNCTION IN CONDITIONS OF NORMAL USE. ROCSTOR IS NOT LIABILE FOR ANY DAMAGE TO ANY OTHER PRODUCT CONNECTED TO A ROCSTOR PRODUCT.

## Limitation on Consequential Damages

ROCSTOR IS NOT LIABLE FOR ANY DAMAGES CAUSED BY THE PRODUCT OR THE FAILURE OF THE PRODUCT TO PERFORM, INCLUDING ANY LOST PROFITS OR SAVINGS OR SPECIAL, INCIDENTAL OR CONSEQUENTIAL DAMAGES. ROCSTOR IS NOT LIABLE FOR ANY CLAIM MADE BY A THIRD PARTY OR MADE BY YOU FOR A THIRD PARTY. THIS LIMITATION OF LIABILITY ALSO APPLIES WHETHER DAMAGES ARE SOUGHT OR A CLAIM IS MADE UNDER THIS LIMITED WARRANTY OR AS A TORT CLAIM (INCLUDING NEGLIGENCE AND STRICT PRODUCT LIABILITY), A CONTRACT CLAIM OR ANY OTHER CLAIM. THIS LIMITATION OF LIABILITY CANNOT BE WAIVED OR AMENDED BY ANY PERSON. THIS LIMITATION OF LIABILITY WILL BE EFFECTIVE EVEN IF YOU HAVE ADVISED ROCSTOR OR AN AUTHORIZED REPRESENTATIVE OF ROCSTOR OF THE POSSIBILITY OF ANY SUCH DAMAGES.
THIS LIMITED WARRANTY GIVES YOU SPECIFIC LEGAL RIGHTS. YOU MAY ALSO HAVE OTHER RIGHTS THAT MAY VARY FROM STATE TO STATE OR FROM COUNTRY TO COUNTRY. YOU ARE ADVISED TO CONSULT APPLICABLE STATE OR COUNTRY LAWS FOR A FULL DETERMINATION OF YOUR RIGHTS.

## Disclaimer

We accept no liability for any loss of data, damages and the inability of Rocstor products to work with any third party equipment. Nor can Rocstor accept any liability or responsibility for software or third party hardware products.

## Limited Warranty Period

The limited warranty period for the **Volt DSC10** is Two (2) Year Parts and Labor. This Limited Warranty extends only to the original purchaser or lessee of this Rocstor branded product and is not transferable to anyone who obtains ownership of the Rocstor branded product from the original purchaser or lessee

## Types of Limited Warranty Service

Your Rocstor Limited Warranty consists of repair or replacement of defective parts, including hard drives identified by Rocstor Support Organization as "pre-failure".

## Carry-in Limited Warranty Service Available Monday - Friday

Under the terms of carry-in service, you may be required to deliver your Rocstor product to the Rocstor Service Center or an authorized service location for warranty repair. You must prepay any shipping charges, taxes or duties associated with transportation of the product. In addition, you are responsible for insuring any product shipped or returned for service. You assume risk of loss during shipping.

**Technical Support / RMA**

Hours: 9:00 am - 5:00 pm PST
Mon - Fri (excluding holidays)

Tell: +1 (818) 727-7000 (Domestic and Internationals)
Fax: +1 (818) 875-0002
Email: support@Rocstor.com