RE8605AC
Essential Series



EDLA-certified with Enhanced Security

The RE8605AC seamlessly integrates Google services with BenQ's reliable hardware and software, now powered by Android 16 for enhanced performance and long-term compatibility. Easily access Google/Microsoft tools and education apps via the Google Play Store and ensure data protection using secure login options, access controls, regular system updates, and built-in Google Play Protect and Safe Browsing.

Advanced Management Solutions (DMS & AMS)

The RE8605AC series features BenQ's cloud-based DMS and AMS, providing centralised control of displays and user accounts from a single dashboard. DMS simplifies device setup with quick onboarding, remote configuration, app management, firmware updates, and task automation, while offering real-time analytics and energy usage insights. AMS ensures secure, personalised access with single sign-on and integration with cloud storage platforms such as Google Drive, OneDrive, and Nextcloud, keeping user data separate and allowing customised settings for a consistent user experience.

Comfortable Viewing with Eye Care Technologies

The RE8605AC interactive display features a bright 500-nit anti-glare 4K screen for clear visibility in any classroom. Its 84W audio system with integrated subwoofers and an 8-microphone array with echo cancellation supports clear communication for hybrid learning. The germ-resistant screen helps promote healthier classrooms, while NFC enables quick and secure access. Built-in eye care technologies, including low blue light and a flicker-free screen, reduce eye strain for comfortable extended use.

Panel	**Screen size**		86"
	Resolution		UHD 3840 × 2160
	Brightness		500 nits
	Typical contrast ratio		5500:1
	Dynamic contrast ratio		50,000:1
	Viewing angle (H/V)		178°/178°
	Response time		6.5 ms
	Backlight life		50,000 hrs
	Panel surface		AG, Haze 25%
	Operating hours		18 hours / 7 days
	Orientation		Landscape
System	**Memory | Storage**		8 GB I 128 GB
	OS		Android 16.0 (EDLA)
	GPU		Arm Mali-G52 MC3
	CPU		Octa-Core (A72 × 4 + A53 × 4)
	NPU		6 TOPS
Power	**Power supply**		AC 100-240 V, 50/60 Hz
	Power consumption	**Typical**	115.2 W
		Standby	<0.5 W
	AC power switch		No
	ENERGY STAR®		Yes
	Wake up		LAN / HDMI
Touch	**Technology**		Precision IR
	Number of touch points		up to 50
	Interface		USB Type-B × 2
Glass	**Thickness**		3.2 mm
	Hardness		9H tempered
	AG coating		Yes
ClassroomCare® Technology	**Eye care: flicker-free & low blue light**		Yes (TÜV-certified)
	Air quality sensors & air ioniser		No
	Germ-resistant screen		Yes (certified by TÜV, SIAA & SGS)
Environment	**Operating temperature**		0°C ~ 40°C
	Operating humidity		20% ~ 80% RH non-condensing
Connectivity	**Input**		HDMI 2.0 × 3, Mic (3.5mm) × 1
	Output		HDMI 2.0 × 1, SPDIF (Optical) × 1, Earphone × 1
	USB		Type-A × 4 (3.0 × 3 / 2.0 × 1), Type-B × 2 (2.0), Type-C × 1 (3.0, 5-in-1: data, video, audio, touch, PD 65 W)
	RS-232 (In)		× 1
	RJ45 (LAN)		× 1 (Android: up to 1000 Mbps / OPS: up to 100 Mbps)
	Wireless connectivity		Optional WD02AT (Wi-Fi 6, Bluetooth 5.2)
	OPS slot (for slot-in PC)		× 1
Built-in peripherals	**Speaker**		12 W × 2
	Subwoofer		30 W × 2
	Microphones		8-mic array w/ echo cancellation, up to 12 m pickup range
	Camera with cover	**Resolution**	50MP 4K
		FOV	D 115°, H 101°, V 84.7°
		AI features	AI auto framing, AI auto voice tracking
	NFC Sensor		Yes
Physical	**Dimensions (W × H × D)**		1960.2 × 1191.2 × 100.5 mm
	Weight (product | shipping)		56.5 kg | 65.5 kg
	Bezel width (T | B | L | R)		15.1 | 15.1 | 15.1 | 44.1 mm
	Wall mounting (VESA) (screw type/max length)		VESA 800 × 600 mm (4 × M8 × 25L), wall mount kit included
Accessories	**Remote control**		× 1
	Stylus		× 2 (PT06)
	Cables		HDMI (3 m) × 1 , USB-B for touch (3 m) × 1

→ Specifications subject to change without notice.

Because Earth Matters

ENERGY STAR®
The energy-efficient design of the RE6505AC displays meets ENERGY STAR® standards and can reduce power consumption by up to 70%.

Sustainable packaging
We've reduced our transport and logistics footprint by increasing the loading rate by 60%.

Remote energy control
Lower unnecessary power use with DMS by remotely powering displays on/off and setting schedules.

SOFTWARE

EZWrite 6
Save lessons in editable whiteboard files (IWB) with Cloud Whiteboarding. Google Classroom is integrated with EZWrite WEB.

InstaShare 2
Wireless screen sharing & casting from any device. Share several screens simultaneously, with different types of content.

X-Sign Broadcast
Announcement system with cross-campus communication. Send visual alerts, warnings, and videos to all or one specific device.

AMS
Account Management System to conveniently load and access your account and cloud storage from any BenQ display.

DMS
Device Management Solution centrally oversees all displays to get real-time status information, deploy OTA updates & more.

INPUT AND OUTPUT TERMINALS

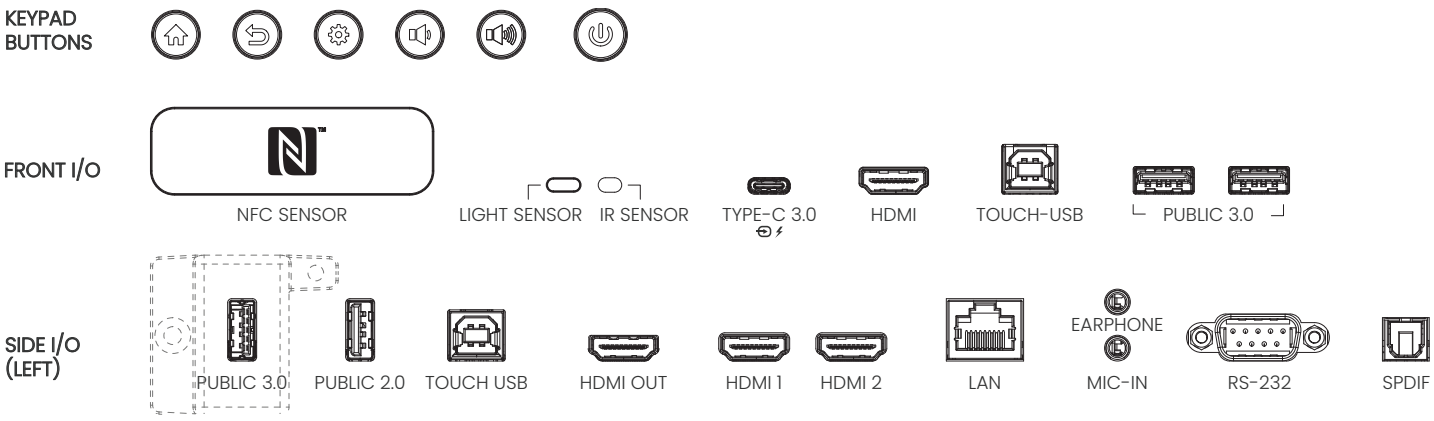

DIMENSIONS (MM)

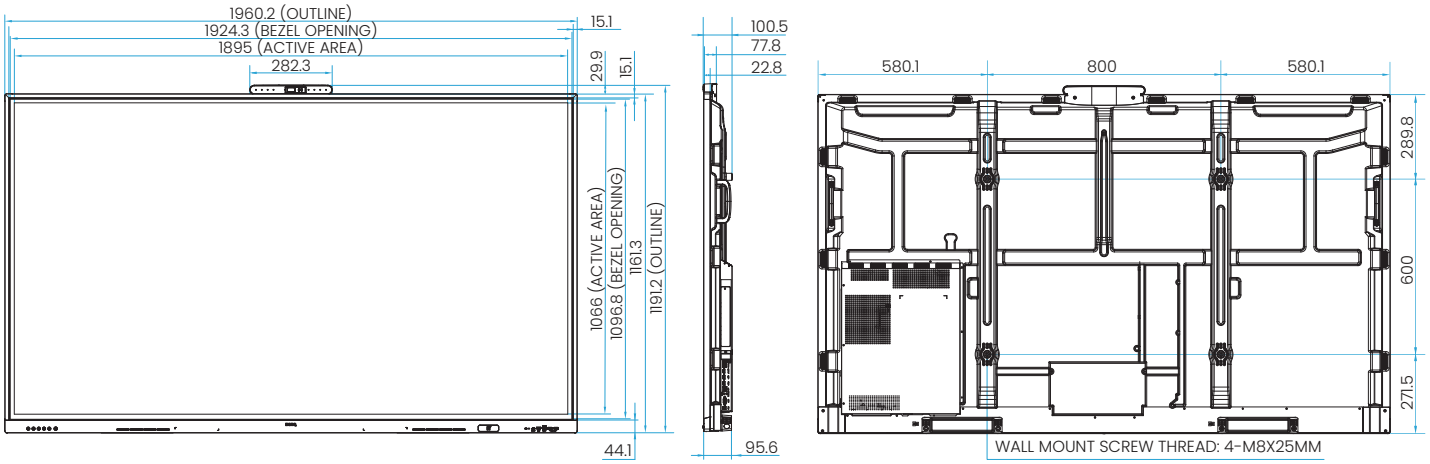

Warranty terms and conditions may change based on the country of purchase and local regulations.

www.benq.eu/en-eu/education.html

© 2026 BenQ Corp. Specifications may vary by region, please visit your local stores for details. Actual product's features and specifications are subject to change without notice. This material may include corporate names and trademarks of third parties which are the properties of the third parties respectively.

BenQ