E26873
First Edition / March 2026

IN SEARCH OF INCREDIBLE

Service Manual

ASUS

Table of contents

Table of contents 2
Important information 5

Chapter 1: Introduction

Disclaimer 7
Safety precautions 7
Repair and reuse information 8
Pre-repair checklist 9
Repair tools 10
Accessories 10
Diagnostic tools 10
Major components 11

Chapter 2: Service Procedures

Bottom cover 14
- Removal 15
- Installation 17

Battery 18
- Removal 19
- Installation 24

M.2 SSD module 29
- Removal 30
- Installation 32

WLAN module 34
Removal 35
Installation 36
RAM module 37
Removal 38
Installation 39
Fan module 41
Removal 42
Installation 44
Heat sink 47
Removal 48
Installation 49
I/O board 50
Removal 51
Installation 52
Speakers 53
Removal 54
Installation 55
Motherboard 56
Removal 57
Installation 60
Touchpad 63
Removal 64
Installation 67

Display panel module 70
Removal 71
Installation 76
Display bezel 81
Removal 82
Installation 84
Display panel 86
Removal 87
Installation 90
Camera module 94
Removal 95
Installation 97
Top cover 99
Removal 100
Installation 101
Keyboard module 102
Removal 103
Installation 104

Appendix

Wiring and connection diagrams 106

Important information

COPYRIGHT INFORMATION

No part of this manual, including the products and software described in it, may be reproduced, transmitted, transcribed, stored in a retrieval system, or translated into any language in any form or by any means, except documentation kept by the purchaser for backup purposes, without the express written permission of ASUSTeK COMPUTER INC. (“ASUS”).

ASUS provides this manual “as is” without warranty of any kind, either express or implied, including but not limited to the implied warranties or conditions of merchantability or fitness for a particular purpose. In no event shall ASUS, its directors, officers, employees or agents be liable for any indirect, special, incidental, or consequential damages (including damages for loss of profits, loss of business, loss of use or data, interruption of business and the like), even if ASUS has been advised of the possibility of such damages arising from any defect or error in this manual or product.

Products and corporate names appearing in this manual may or may not be registered trademarks or copyrights of their respective companies, and are used only for identification or explanation and to the owners’ benefit, without intent to infringe.

Specifications and information contained in this manual are furnished for informational use only, and are subject to change at any time without notice, and should not be construed as a commitment by ASUS. ASUS assumes no responsibility or liability for any errors or inaccuracies that may appear in this manual, including the products and software described in it.

Copyright © 2026 ASUSTeK COMPUTER INC. All Rights Reserved.

LIMITATION OF LIABILITY

Circumstances may arise where because of a default on ASUS’ part or other liability, you are entitled to recover damages from ASUS. In each such instance, regardless of the basis on which you are entitled to claim damages from ASUS, ASUS is liable for no more than damages for bodily injury (including death) and damage to real property and tangible personal property; or any other actual and direct damages resulted from omission or failure of performing legal duties under this Warranty Statement, up to the listed contract price of each product. ASUS will only be responsible for or indemnify you for loss, damages or claims based in contract, tort or infringement under this Warranty Statement. This limit also applies to ASUS’ suppliers and its reseller. It is the maximum for which ASUS, its suppliers, and your reseller are collectively responsible.

Under no circumstances is ASUS liable for any of the following: (1) third-party claims against you for damages; (2) loss of, or damage to, your records or data; or (3) special, incidental, or indirect damages or for any economic consequential damages (including lost profits or savings), even if ASUS, its suppliers or your reseller is informed of their possibility.

SERVICE AND SUPPORT

Visit our multi-language website at https://www.asus.com/support/.

Chapter 1: Introduction

Disclaimer

ASUS is not responsible for direct, indirect, intentional or unintentional damages resulting from improper installation and operation.

Safety precautions

- Before handling components, use a grounded wrist strap or touch a safely grounded object to avoid damaging them due to static electricity.
- Keep liquids or moisture away from your device to avoid short circuits.
- Remove rings, watches, and any other metal objects from your hands.
- Hold components by the edges to avoid touching the ICs.
- Properly install all components before connecting the AC power.
- Do not use power adapters or batteries from other devices to reduce the risk of injury to persons due to fire or explosion. Use only certified power adapters or batteries supplied by the manufacturer or authorized retailers.
- Detach all clips or flaps before removing cables to prevent damage.

- Disconnect cables, connectors, and power plugs by pulling the plug evenly to avoid damage.
- Use the correct screw models on your device to prevent damage.
- Confirm that the cable orientation is correct before connecting any cables.
- Fully remove all adhesive residue after removing and before installing any components.
- Photograph the appearance of cables, cable routing, connectors, and screws for later reference before proceeding with each step.

Repair and reuse information

This device meets environmental and safety standards and is designed for easy repair and reuse.

- The components in this device can be disassembled and reassembled using commonly available tools.
- The screws in this device are reusable. If screws are damaged or missing, contact an ASUS service center for assistance.

Pre-repair checklist

- Read the entire manual before starting any service procedures and follow all instructions.
- Back up the data on your device.
- Place your device on a clean and stable surface.
- Turn off your device.
- Disconnect all connected peripherals and cables.
- Disconnect all power cables and remove the battery pack (if applicable).

IMPORTANT!

- If you are uncertain about performing the described service procedures, stop and contact an authorized service center for assistance.
- Purchase replacement components from authorized retailers of this device to ensure maximum compatibility and reliability.

NOTE:

- The illustrations are for reference only.
- The service procedures described in this manual depend on the model configuration and may not reflect the entire servicing process. To service components that are not covered in this manual, please visit an authorized service center for further assistance.
- Keep all adhesive tape, insulating materials, screws, and other removable items in a safe place until the service procedure is completed, as they may be needed during installation.

Repair tools



Screwdriver



Plastic blade



Tweezers

Accessories



Power adapter

Diagnostic tools

Use ASUS System Diagnostics after completing any service procedures to ensure that all components are working properly.

For more information, visit www.asus.com/support/FAQ/1048490/.

Major components

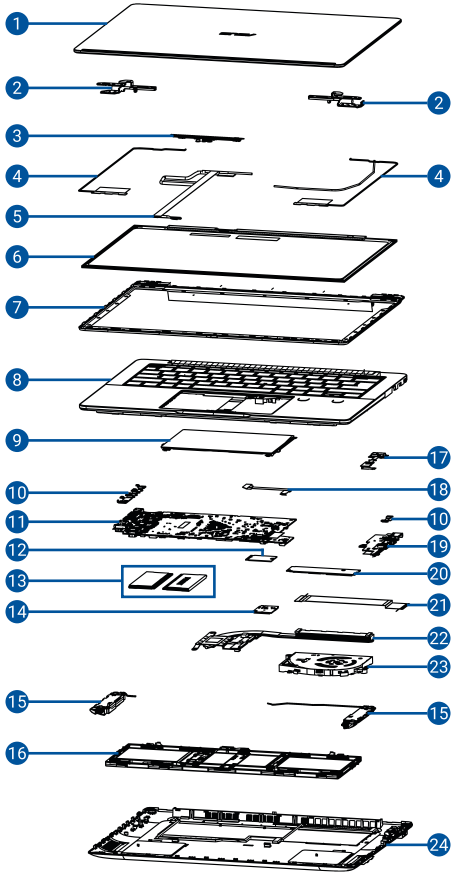

1. Top cover
2. Hinges
3. Camera module
4. WLAN antenna
5. eDP cable
6. Display panel
7. Display bezel
8. Keyboard module
9. Touchpad
10. I/O port bracket
11. Motherboard
12. M.2 2230 SSD module*
13. RAM module(s)
14. WLAN module
15. Speakers
16. Battery
17. Fingerprint sensor
18. Touchpad cable
19. I/O board
20. M.2 2280 SSD module
21. I/O board cable
22. Heat sink
23. Fan module
24. Bottom cover

** On selected models*

Chapter 2: Service Procedures

Bottom cover

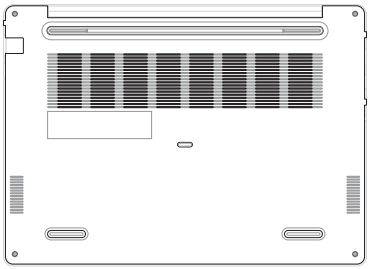

Before you begin

Read the **Safety Precautions** and complete the **Pre-repair Checklist**.

Screw list

- ⊕ M2.0 X 4.5L (4pcs)

Removal

1. Remove the screw(s) from the bottom cover.

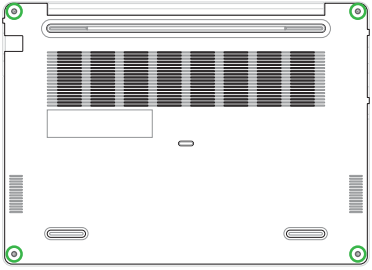

2. Use the plastic blade to pry open the indicated area of the bottom cover as shown in the illustration below.

IMPORTANT!

- Avoid sliding the plastic blade along the side of your device or air vents to prevent damage.
- System power will be cut off automatically upon removal of the bottom cover. To restore power, reattach the bottom cover securely and connect the AC power adapter to your Notebook PC after the servicing is complete.

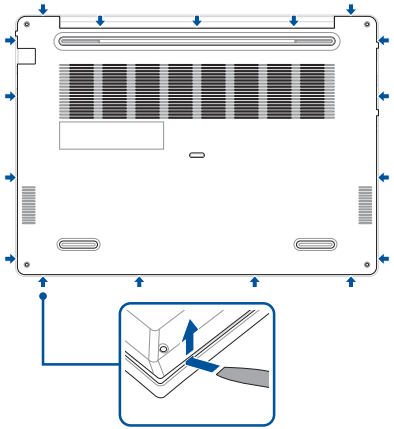

Installation

1. Install the bottom cover.
2. Gently press down on the bottom cover until it clicks into place.
3. Secure the bottom cover using the screw(s) you removed earlier.

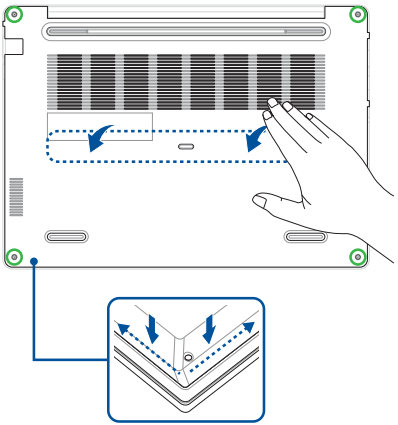

Battery

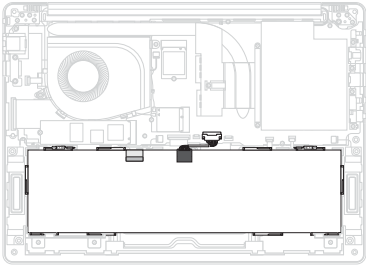

Before you begin

IMPORTANT! Serious risk of fire or explosion may occur if the battery is punctured. If you are uncertain about proceeding, stop and contact an authorized service center for assistance.

1. Read the **Safety Precautions** and **Pre-repair Checklist**.
2. Remove the bottom cover.

Removal

1. Disconnect the battery power cable.

IMPORTANT! Disconnect the battery power cable by lifting the side with the red wires first.

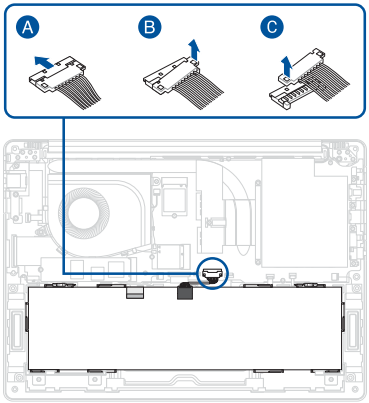

2. Push the latches into the unlocked position.

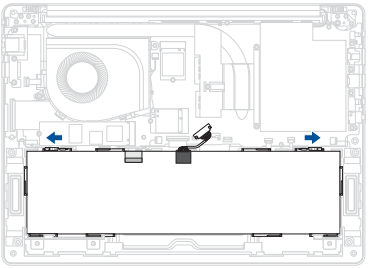

3. Remove the battery.

42Wh/50Wh battery

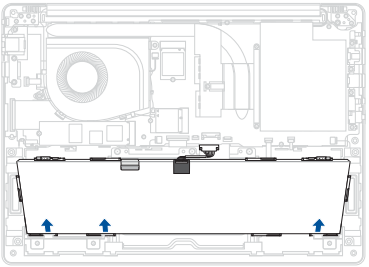

70Wh battery

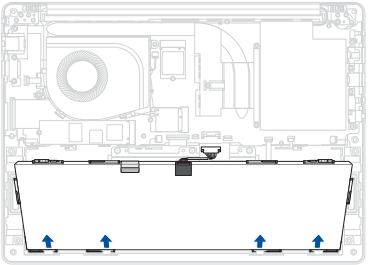

4. Remove the latches.

NOTE: The following steps are only required when you are replacing the existing component with a new one.

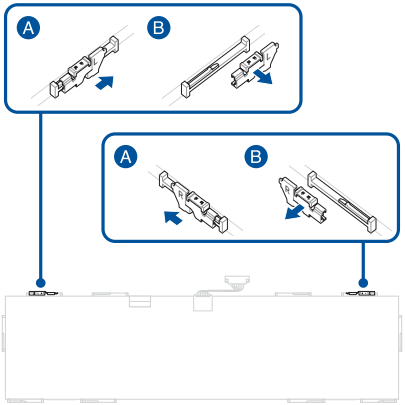

5. Remove the tape, then disconnect the cable.

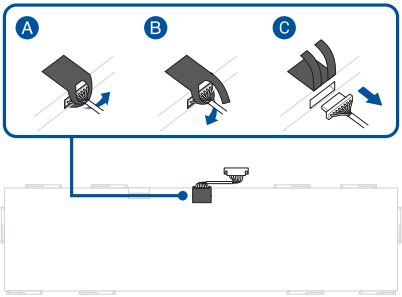

Installation

1. Reconnect the cable.

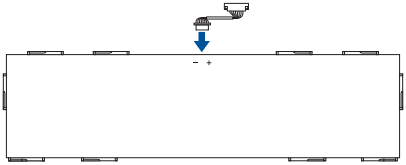

2. Attach the tape.

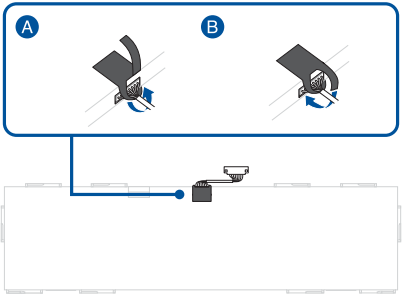

3. Attach the foam piece to the battery.

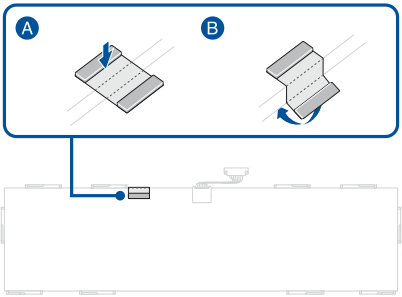

4. Install the latches.

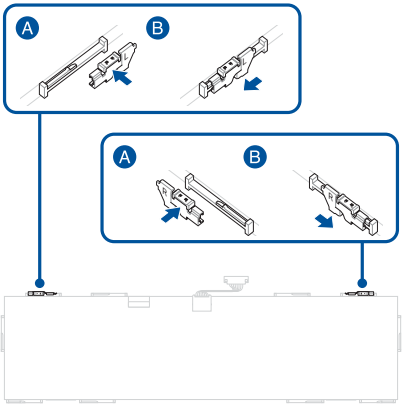

5. Install the battery.

42Wh/50Wh battery

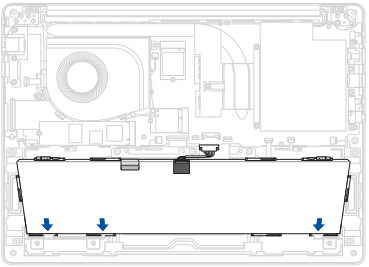

70Wh battery

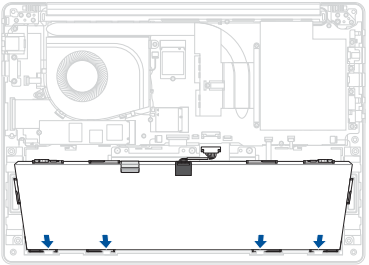

6. Push the latches into the locked position.

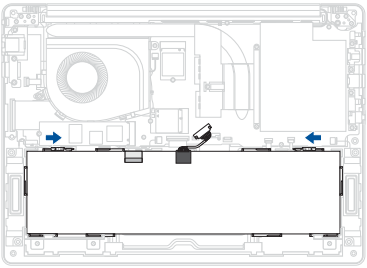

7. Reconnect the battery power cable.
8. Install the components you removed in the *Before you begin* section.

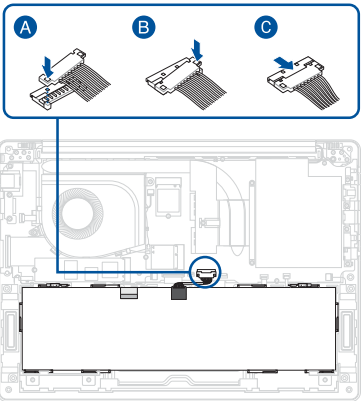

M.2 SSD module

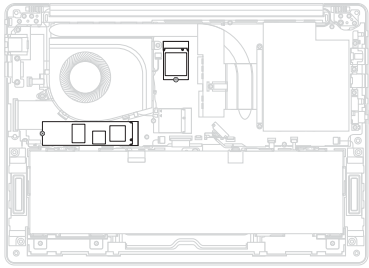

Before you begin

NOTE: The operating system must be installed on the primary M.2 SSD (SSD1/ Disk 0)

1. Read the **Safety Precautions** and **Pre-repair Checklist**.
2. Remove the bottom cover and disconnect the battery power cable.

Screw list

- ⊕ M2.0 X 2.5L (1-2pcs)

Removal

1. Remove the screw(s).
2. Remove the M.2 SSD module(s).

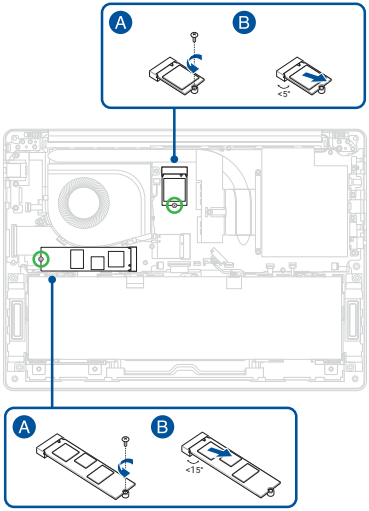

3. Remove the thermal pad from the motherboard.

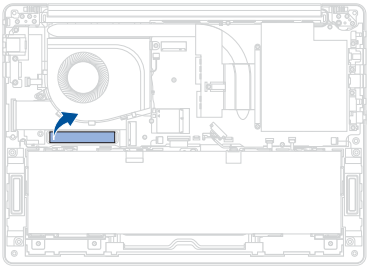

Installation

1. Attach the thermal pad to the motherboard.

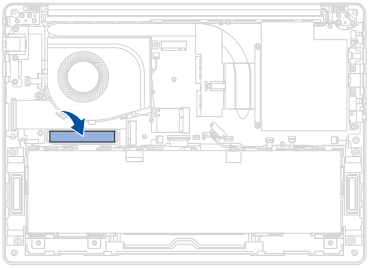

2. Install the M.2 SSD module(s), then secure the M.2 SSD module(s) using the screw(s) you removed earlier.
3. Install the components you removed in the *Before you begin* section.

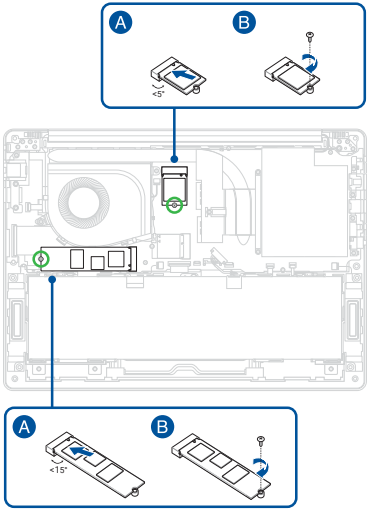

WLAN module

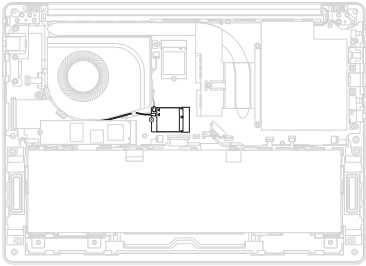

Before you begin

1. Read the **Safety Precautions** and **Pre-repair Checklist**.
2. Remove the bottom cover and disconnect the battery power cable.

Screw list

- ⊕ M2.0 X 2.5L (1pc)

Removal

1. Disconnect the cable(s).
2. Remove the screw.
3. Remove the WLAN module.

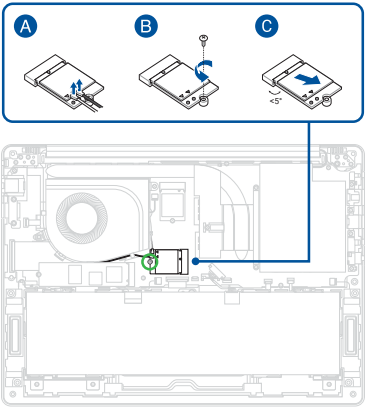

Installation

1. Install the WLAN module.
2. Secure the WLAN module using the screw you removed earlier.
3. Reconnect the cable(s).
4. Install the components you removed in the *Before you begin* section.

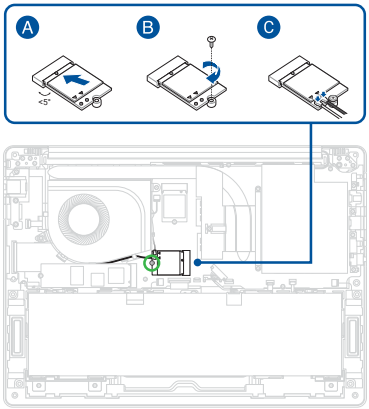

RAM module

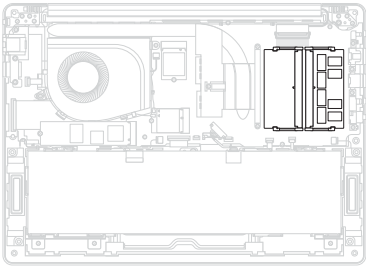

Before you begin

1. Read the **Safety Precautions** and **Pre-repair Checklist**.
2. Remove the bottom cover and disconnect the battery power cable.

Removal

1. Remove the absorber sheet.

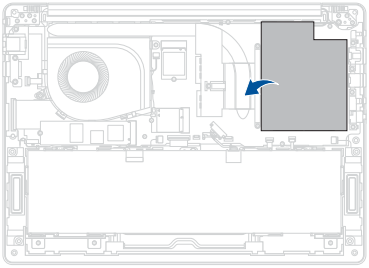

2. Push the clips outwards to remove the RAM module(s).

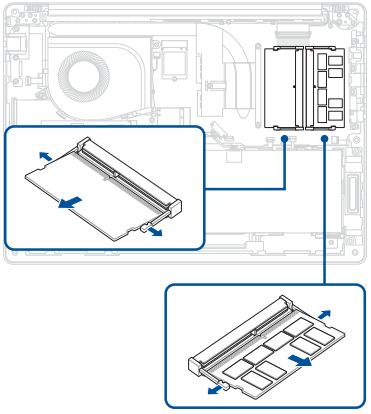

Installation

1. Align and insert the RAM module(s) into the RAM module slot(s).

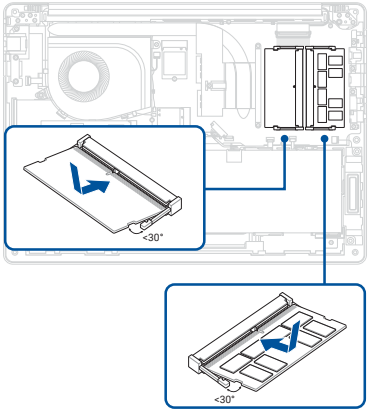

2. Attach the absorber sheet.
3. Install the components you removed in the *Before you begin* section.

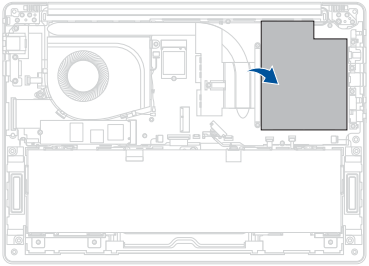

Fan module

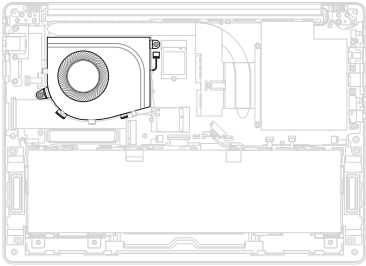

Before you begin

1. Read the **Safety Precautions** and **Pre-repair Checklist**.
2. Remove the bottom cover and disconnect the battery power cable.

Screw list

- ⊕ M2.0 X 4.5L (2pcs)

Removal

1. Disconnect the cable(s).
2. Remove the cable(s) from the cable guide(s).

14” model

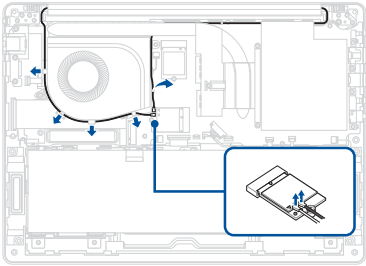

16” model

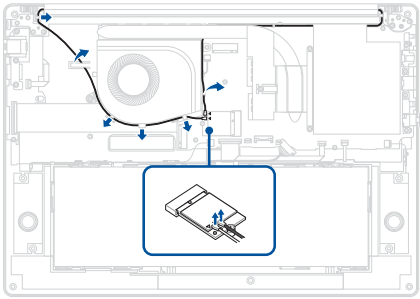

3. Remove the screw(s) and disconnect the cable, then remove the fan.

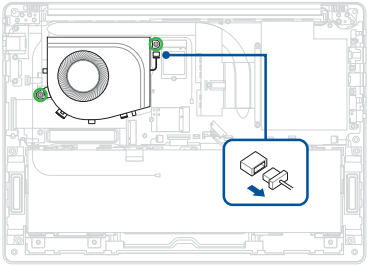

Installation

1. Install the fan, then reconnect the cable and secure the fan using the screw(s) you removed earlier.

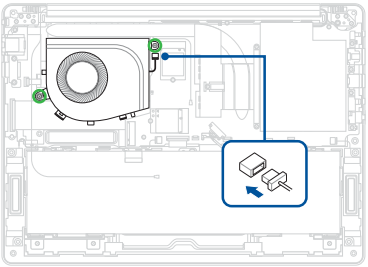

2. Route the cable(s) through the cable guide(s).

IMPORTANT! Damage may occur if cables are not properly routed through the cable guides. Confirm that all cables are routed through each of the indicated cable guides before proceeding.

3. Reconnect the cable(s).
4. Install the components you removed in the *Before you begin* section.

14” model

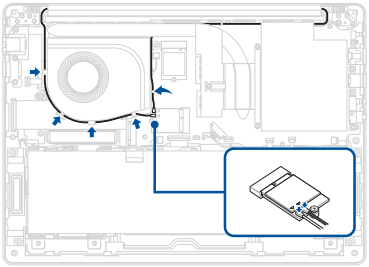

16” model

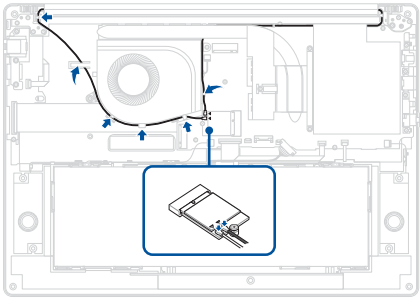

Heat sink

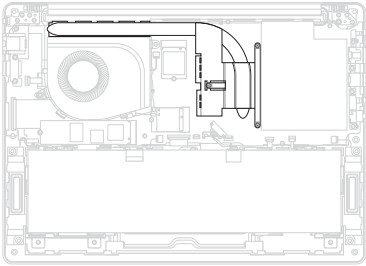

Before you begin

IMPORTANT! Thermal paste, thermal pads, liquid metal, or other thermal interface materials must be thoroughly removed and replaced if this component is removed. Ensure that replacement materials are available before proceeding, or contact an authorized service center for assistance.

1. Read the **Safety Precautions** and **Pre-repair Checklist**.
2. Remove the bottom cover and disconnect the battery power cable.

Screw list

- ⊕ M2.0 X 2.5L (3pcs)

Removal

Remove the screw(s) one by one in the sequence shown in the illustration below, then remove the heat sink.

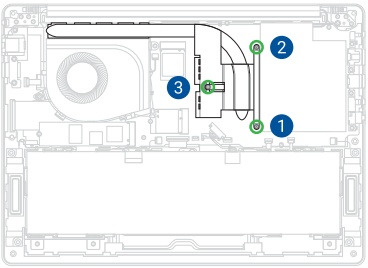

Installation

1. Install the heat sink, then secure the heat sink screw(s) one by one in the sequence shown in the illustration below.
2. Install the components you removed in the *Before you begin* section.

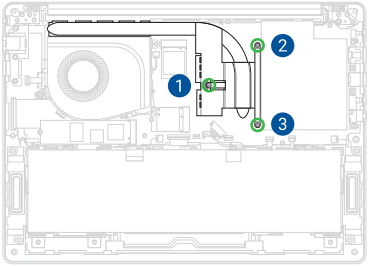

I/O board

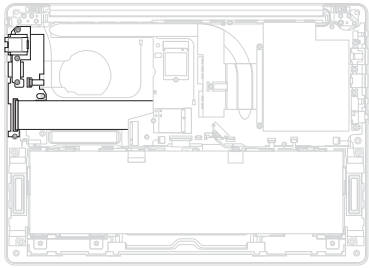

Before you begin

1. Read the **Safety Precautions** and **Pre-repair Checklist**.
2. Remove the bottom cover and disconnect the battery power cable.

Screw list

- ⊕ M2.0 X 4.5L (4pcs)

Removal

1. Disconnect the cable(s).

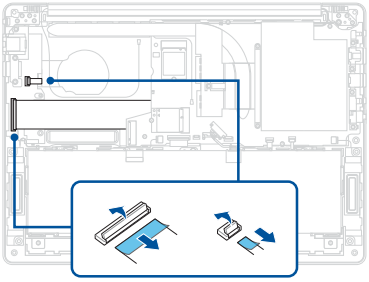

2. Remove the screw(s).
3. Remove the LAN port cover.
4. Remove the I/O board.

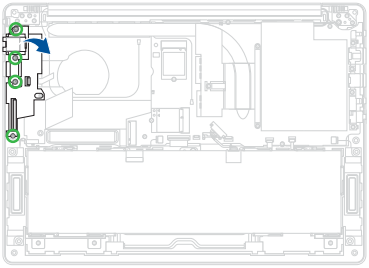

Installation

1. Install the I/O board.
2. Install the LAN port cover.
3. Secure the I/O board using the screw(s) you removed earlier.

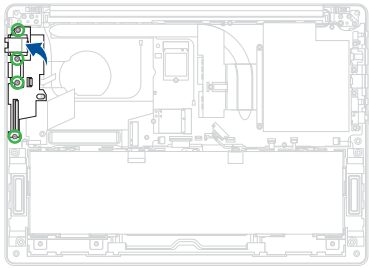

4. Reconnect the cable(s).
5. Install the components you removed in the *Before you begin* section.

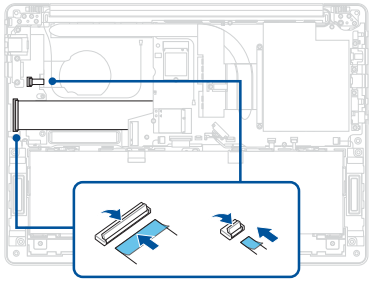

Speakers

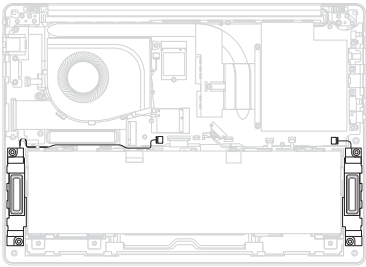

Before you begin

1. Read the **Safety Precautions** and **Pre-repair Checklist**.
2. Remove the bottom cover and disconnect the battery power cable.
3. Remove the following components:
    - Battery

Removal

1. Disconnect the cable(s).
2. Remove the cable(s) from the cable guide(s).
3. Remove the speakers.

14” model

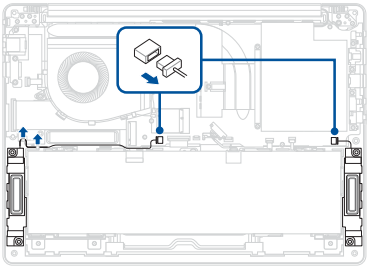

16” model

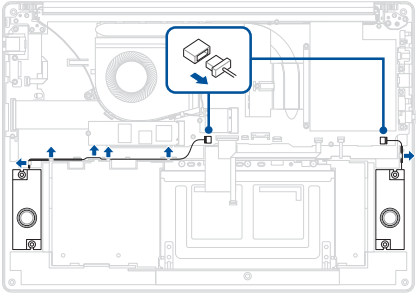

Installation

1. Install the speakers.
2. Reconnect the cable(s).
3. Route the cable through the cable guide(s).

IMPORTANT! Damage may occur if cables are not properly routed through the cable guides. Confirm that all cables are routed through each of the indicated cable guides before proceeding.

4. Install the components you removed in the *Before you begin* section.

14” model

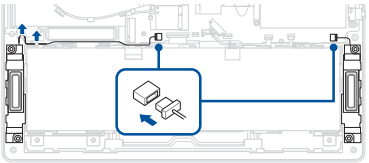

16” model

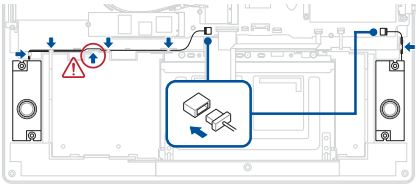

Motherboard

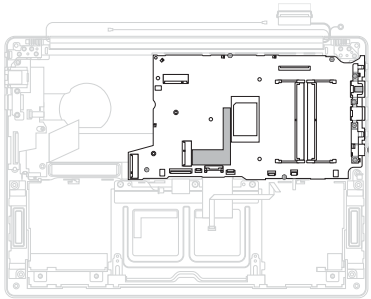

Before you begin

1. Read the **Safety Precautions** and **Pre-repair Checklist**.
2. Remove the bottom cover and disconnect the battery power cable.
3. Remove the following components:
   - Battery
   - M.2 SSD module
   - WLAN module
   - RAM module
   - Fan module
   - Heat sink

Screw list

- ⊕ M2.0 X 4.5L (5pcs)
- ⊕ M2.0 X 2.5L (4pcs)

Removal

1. Remove the screw.
2. Disconnect the cable.

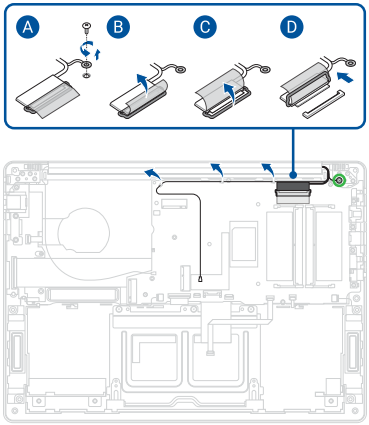

3. Disconnect the cable(s).

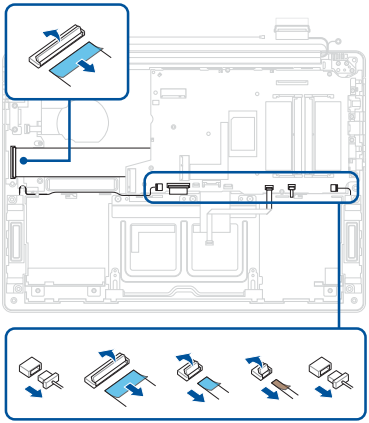

4. Remove the screw(s).
5. Remove the motherboard.

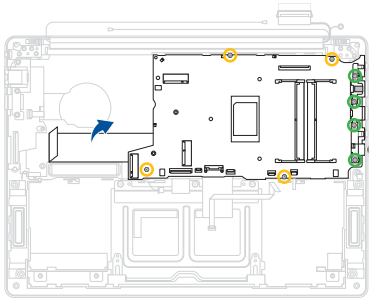

6. Remove the I/O port bracket.

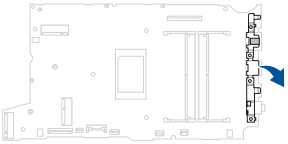

7. Disconnect the cable from the rear side of the motherboard.

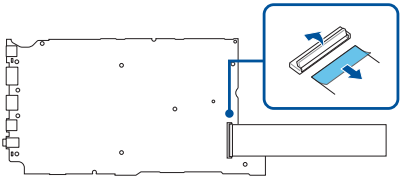

Installation

1. Reconnect the cable to the rear side of the motherboard.

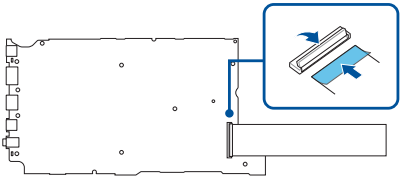

2. Install the I/O port bracket.

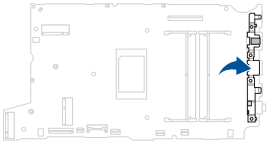

3. Install the motherboard, then secure the motherboard using the screw(s) you removed earlier.

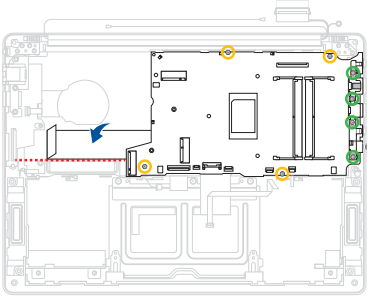

4. Reconnect the cable(s).

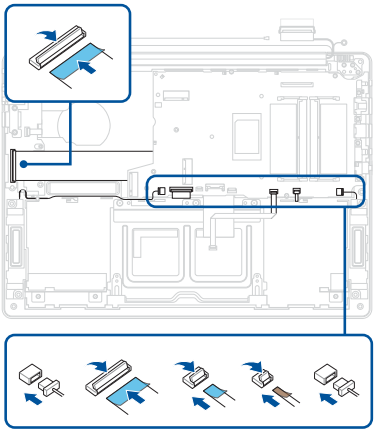

5. Route the cable through the cable guide(s).

IMPORTANT! Damage may occur if cables are not properly routed through the cable guides. Confirm that all cables are routed through each of the indicated cable guides before proceeding.

6. Reconnect the cable, then secure the cable using the screw you removed earlier.
7. Install the components you removed in the *Before you begin* section.

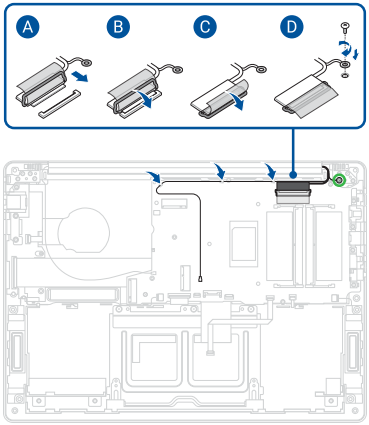

Touchpad

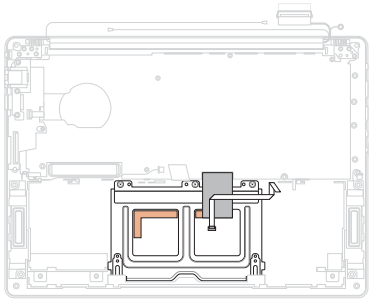

Before you begin

1. Read the **Safety Precautions** and **Pre-repair Checklist**.
2. Remove the bottom cover and disconnect the battery power cable.
3. Remove the following components:
   - Battery
   - M.2 SSD module
   - WLAN module
   - RAM module
   - Fan module
   - Heat sink
   - Motherboard

Screw list

- ⊕ M2.0 X 2.0L (3pcs)

Removal

1. Disconnect the cable.

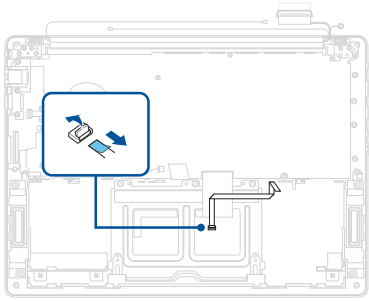

2. Remove the tape.
3. Remove the screw(s).
4. Remove the touchpad.

14” model

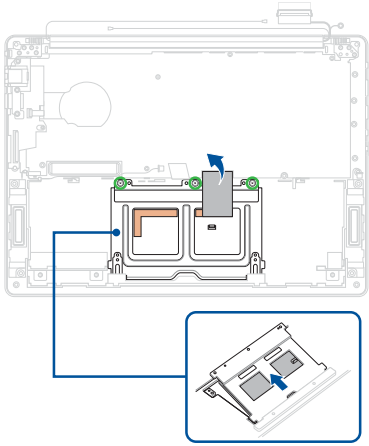

16” model

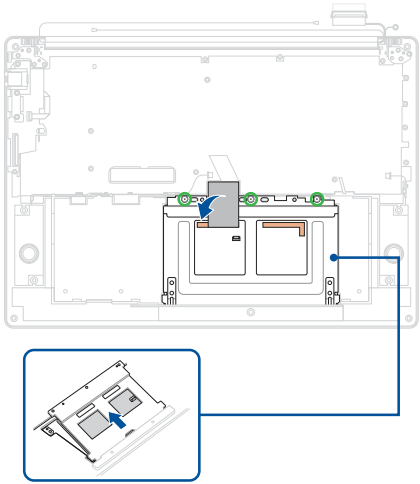

Installation

1. Install the touchpad, then secure the touchpad using the screw(s) you removed earlier.
2. Attach the tape.

14” model

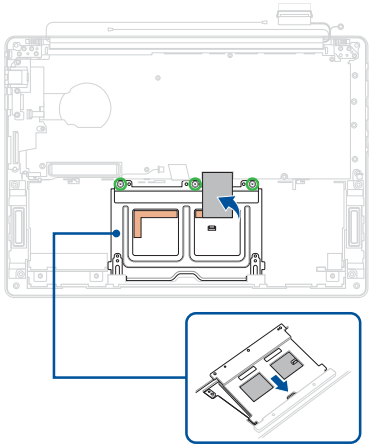

16” model

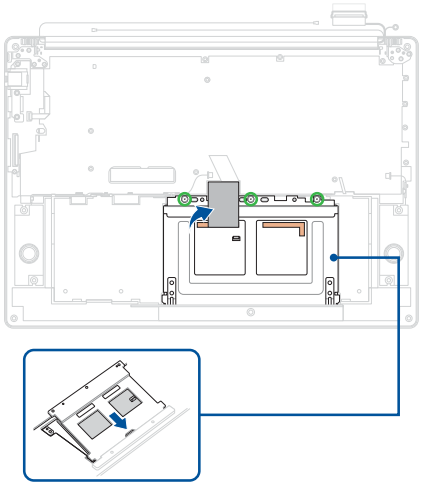

3. Reconnect the cable.
4. Install the components you removed in the *Before you begin* section.

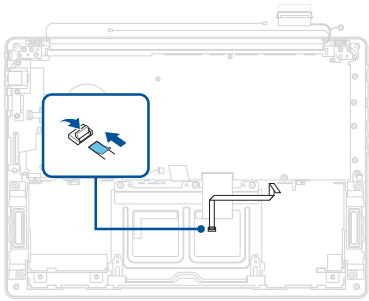

Display panel module

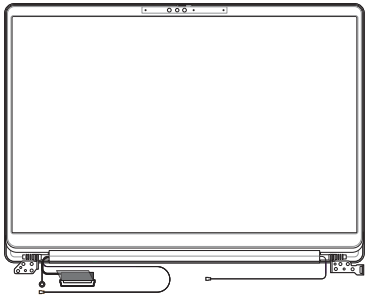

Before you begin

IMPORTANT! Do not bend the display panel in any way to avoid risk of display panel leakage.

1. Read the **Safety Precautions** and **Pre-repair Checklist**.
2. Remove the bottom cover and disconnect the battery power cable.
3. Remove the following components:
   - WLAN module

Screw list

- ⊕ M2.0 X 4.5L (8pcs)

Removal

1. Remove the absorber sheet.

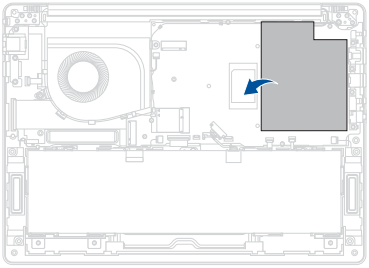

2. Remove the screw and disconnect the cable(s).

14” model

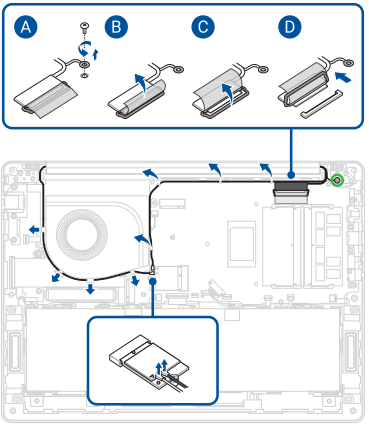

16” model

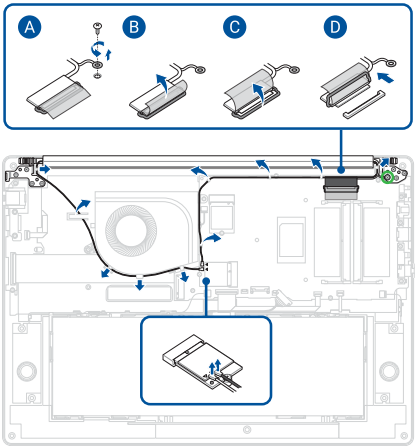

3. Place your device with the display panel hanging over the edge of the workspace as shown in the illustration below.

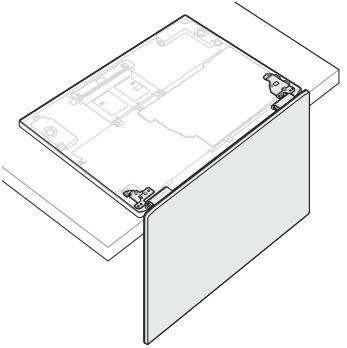

4. Remove the screw(s).

14” model

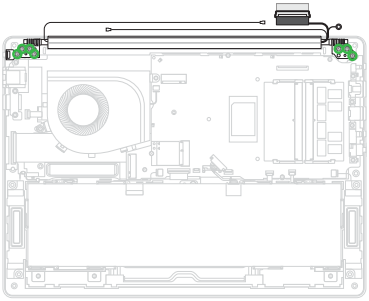

16” model

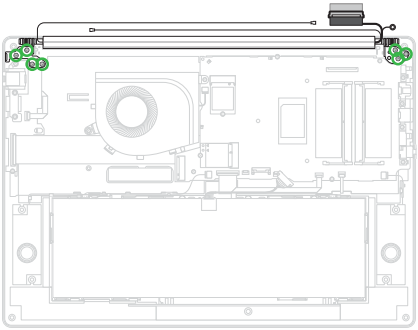

5. Remove the display panel module.

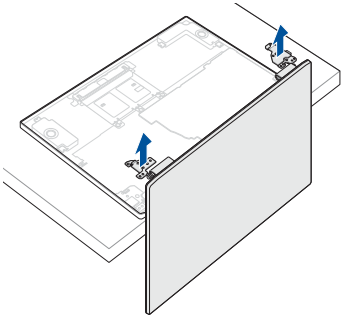

Installation

1. In the orientation shown, align and place the hinges of the display panel module on the screw holes.

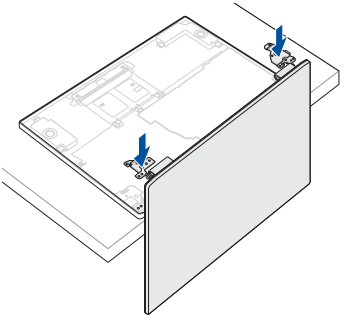

2. Secure the display panel module using the screw(s) you removed earlier.

14” model

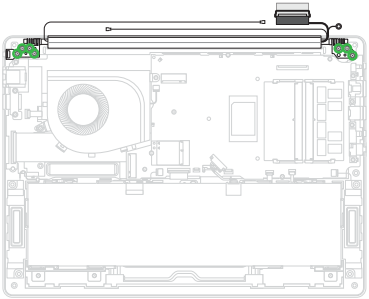

16” model

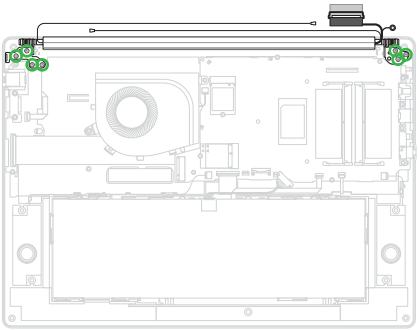

3. Route the cable through the cable guide(s).

IMPORTANT! Damage may occur if cables are not properly routed through the cable guides. Confirm that all cables are routed through each of the indicated cable guides before proceeding.

4. Reconnect the cable(s).
5. Secure the cable using the screw you removed earlier.

14” model

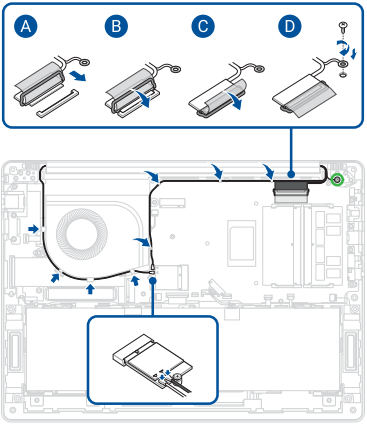

16” model

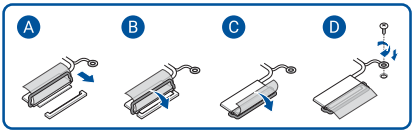

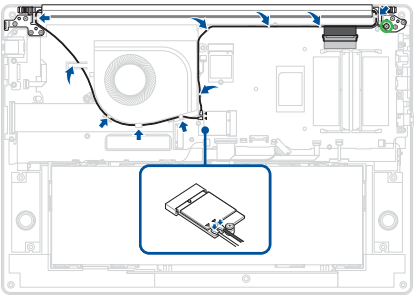

6. Attach the absorber sheet.
7. Install the components you removed in the *Before you begin* section.

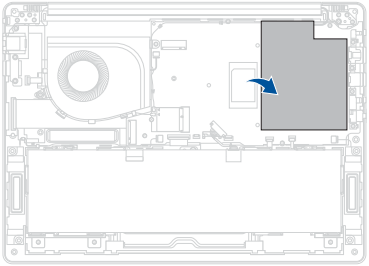

Display bezel



Before you begin

IMPORTANT! This component is fragile. Damage may occur if the service procedure is performed incorrectly. If you are uncertain about proceeding, stop and contact an authorized service center for assistance.

1. Read the **Safety Precautions** and **Pre-repair Checklist**.
2. Remove the bottom cover and disconnect the battery power cable.
3. Remove the following components:
   - Display panel module

Removal

1. Carefully pry the bezel loose, then remove the bezel.

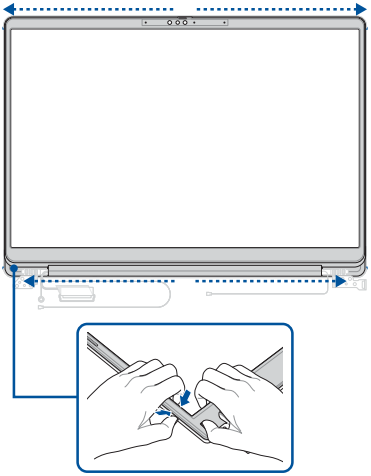

2. Remove the absorber sheet (on selected models).

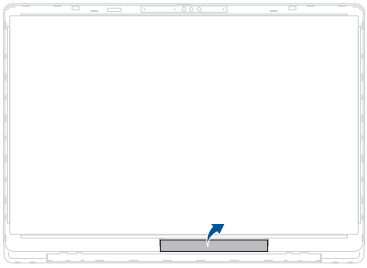

Installation

1. Attach the absorber sheet (on selected models).

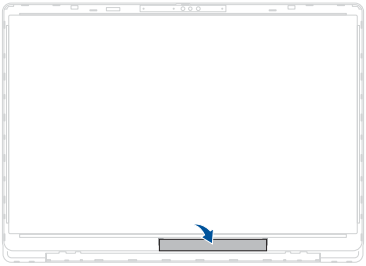

2. Remove the release liners from the tape on the bezel.

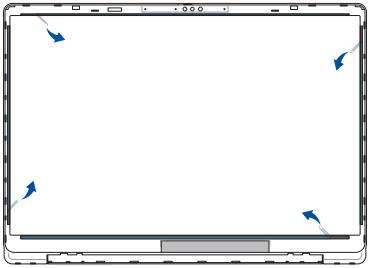

3. Align and install the bezel.
4. Install the components you removed in the *Before you begin* section.

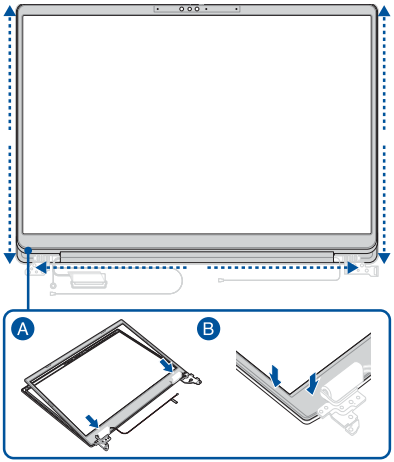

Display panel

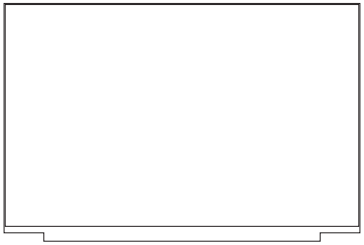

Before you begin

IMPORTANT! Do not bend the display panel in any way to avoid risk of display panel leakage.

1. Read the **Safety Precautions** and **Pre-repair Checklist**.
2. Remove the bottom cover and disconnect the battery power cable.
3. Remove the following components:
   - Display panel module
   - Display bezel

Removal

1. Locate the tip of the stretch release tape, then carefully pull out the stretch release tape as shown in the illustration below.

IMPORTANT! Maintain a flat angle and constant speed when pulling the stretch release tape. Excessive force may damage the stretch release tape and prevent removal of the display panel.

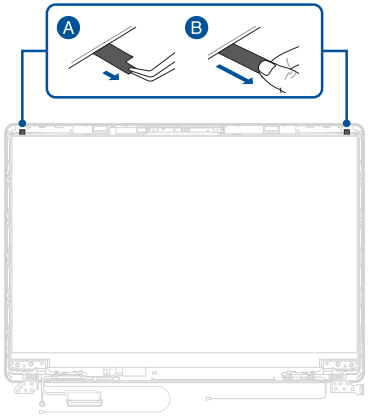

2. Remove the cable(s) from the cable guide(s).
3. Lift and flip the display panel over.

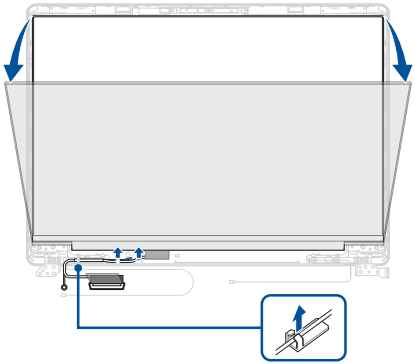

4. Disconnect the cable from the rear side of the display panel.

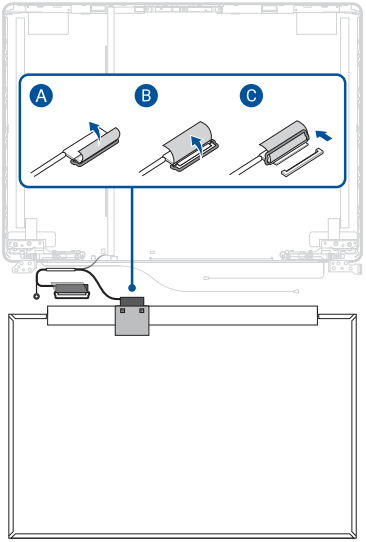

Installation

1. Remove the polymer film (on selected models).

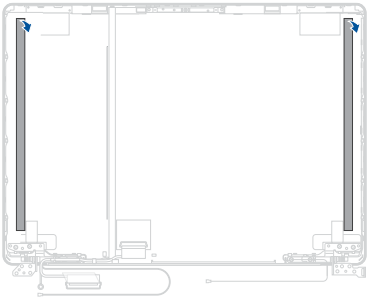

2. Remove the release liner(s) from the bottom side of the stretch release tape.
3. Align and attach the stretch release tape to the top cover.
4. Remove the release liner(s) from the top side of the stretch release tape.

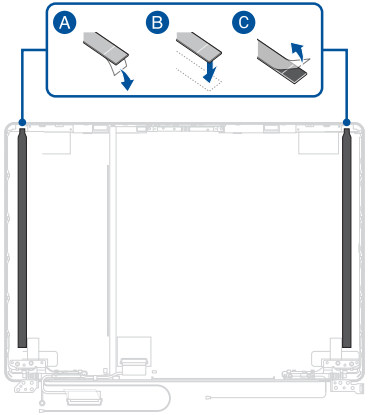

5. Reconnect the cable to the rear side of the display panel.

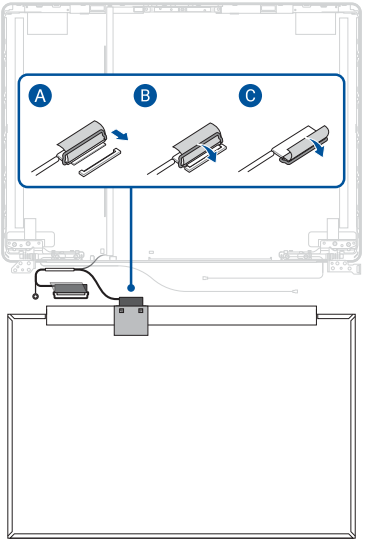

6. Flip the display panel over, then align the display panel with the chassis and gently press down on the display panel.
7. Route the cable through the cable guide(s).

IMPORTANT! Damage may occur if cables are not properly routed through the cable guides. Confirm that all cables are routed through each of the indicated cable guides before proceeding.

8. Install the components you removed in the *Before you begin* section.

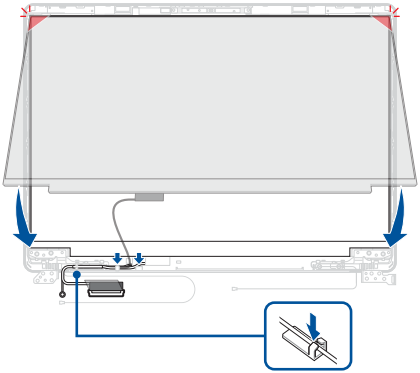

Camera module

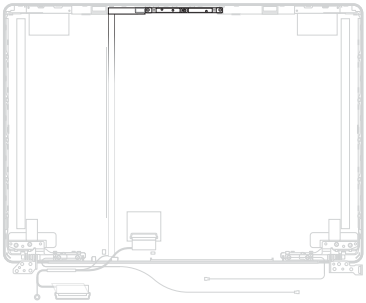

Before you begin

IMPORTANT! This component is fragile. Damage may occur if the service procedure is performed incorrectly. If you are uncertain about proceeding, stop and contact an authorized service center for assistance.

1. Read the **Safety Precautions** and **Pre-repair Checklist**.
2. Remove the bottom cover and disconnect the battery power cable.
3. Remove the following components:
   - Display panel module
   - Display bezel
   - Display panel

Removal

1. Disconnect the cable.
2. Carefully remove the camera module.
3. Remove the rubber caps from the camera module.

HD/FHD camera

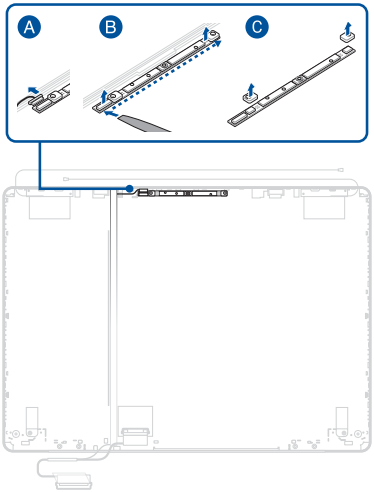

IR camera

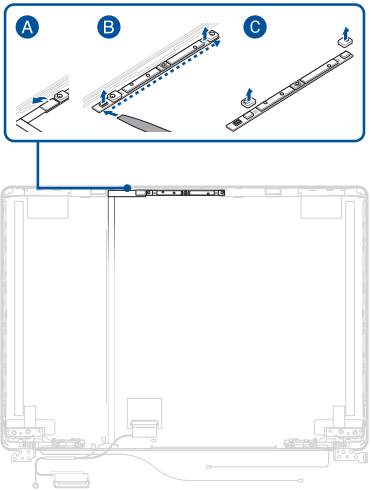

Installation

1. Attach the rubber caps to the camera module.
2. Install the camera module.
3. Reconnect the cable.
4. Install the components you removed in the *Before you begin* section.

HD/FHD camera

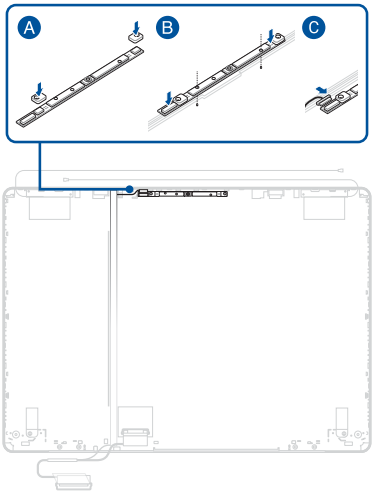

IR camera

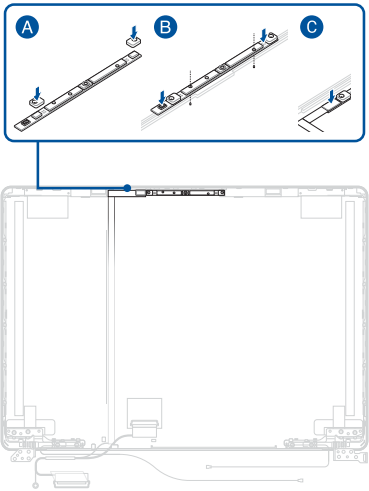

Top cover

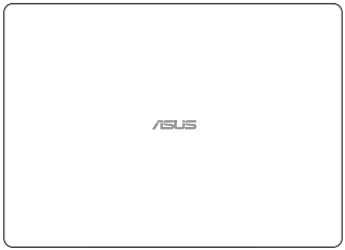

Before you begin

1. Read the **Safety Precautions** and **Pre-repair Checklist**.
2. Remove the bottom cover and disconnect the battery power cable.
3. Remove the following components:
   - Display panel module
   - Display bezel
   - Display panel
   - Camera module

Screw list

- ⊕ M2.0 X 5.5L (4pcs)
- ⊕ M2.5 X 3.0L (4pcs)

Removal

1. Remove the screw(s).
2. Remove the hinges.

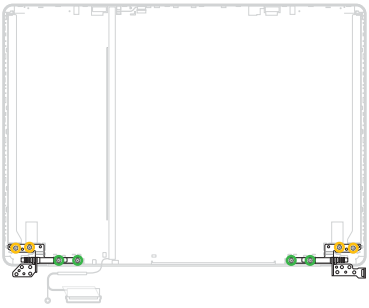

Installation

1. Install the hinges, then secure the hinges using the screw(s) you removed earlier.
2. Install the components you removed in the *Before you begin* section.

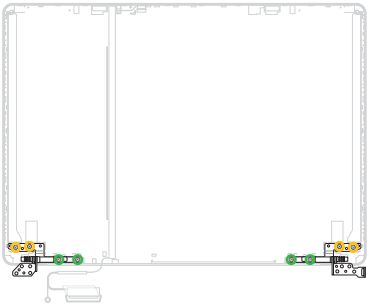

Keyboard module

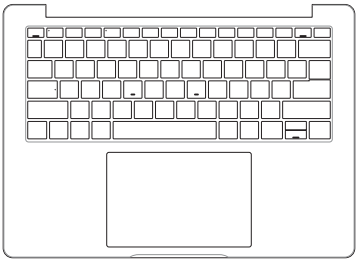

Before you begin

1. Read the **Safety Precautions** and **Pre-repair Checklist**.
2. Remove the bottom cover and disconnect the battery power cable.
3. Remove the following components:
   - Battery
   - M.2 SSD module
   - WLAN module
   - RAM module
   - Fan module
   - Heat sink
   - I/O board
   - Speakers
   - Motherboard
   - Touchpad
   - Display panel module

Removal

Disconnect the cable (on selected models).

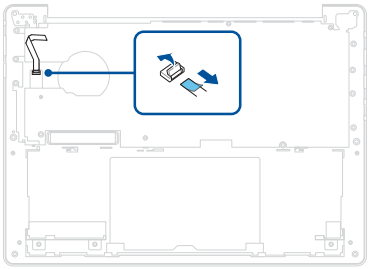

Installation

1. Reconnect the cable (on selected models).
2. Install the components you removed in the *Before you begin* section.

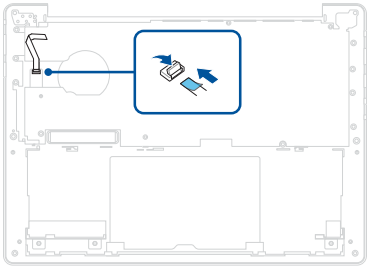

Appendix

Wiring and connection diagrams

Top view

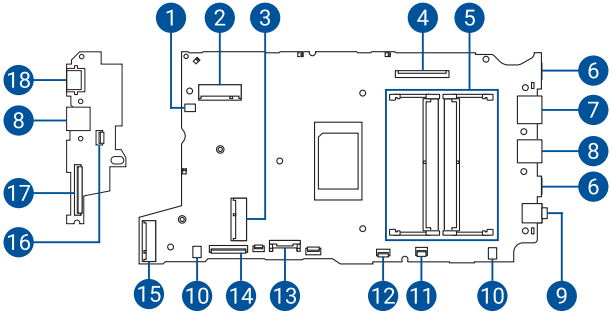

Bottom view

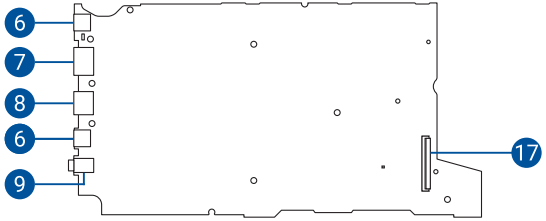

1. Fan connector
2. M.2 2230 SSD connector
3. WLAN module connector
4. eDP connector
5. RAM module slot
6. USB Type-C® connector
7. HDMI connector
8. USB Type-A connector
9. Audio connector
10. Speaker connector
11. Keyboard backlight connector
12. Touchpad connector
13. Battery connector
14. Keyboard connector
15. M.2 2280 SSD connector
16. Fingerprint sensor connector
17. I/O board connector
18. LAN connector