Easy start
with videos

LCD Monitor
Quick Start Guide

Stylish Monitor with Eye Care Technology | G Series

DN: GW2790P-EQ-V0

© 2026 BenQ Corporation. All rights reserved. Rights of modification reserved.

Package contents

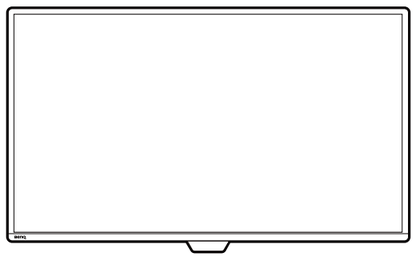

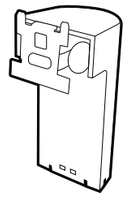

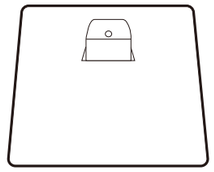



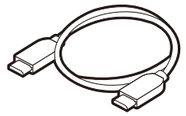

HDMI

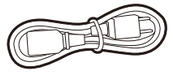

Power cord

*Package contents may vary by region.

P/N: 4J.XXXXX.XXX

Setup

1

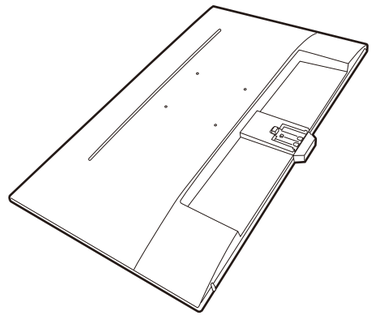

2

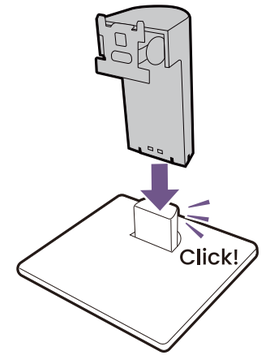

3

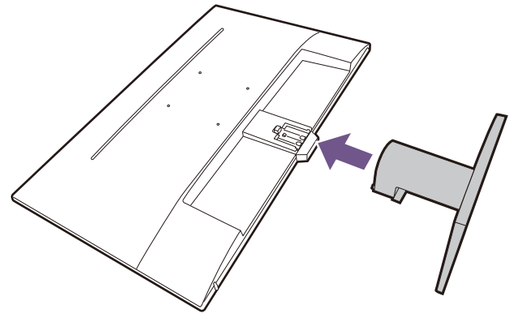

4

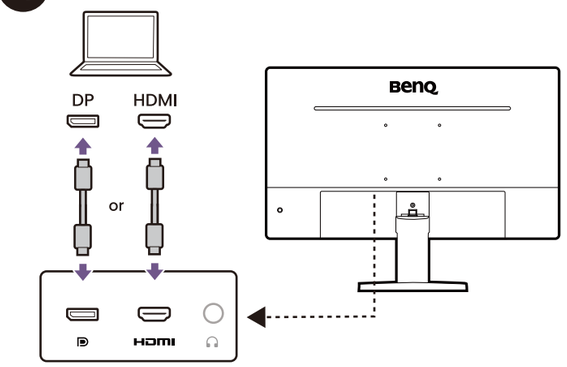

5

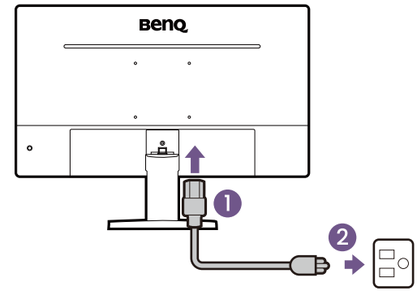

6

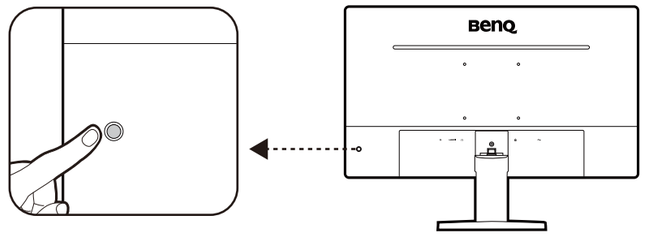

Installing Software

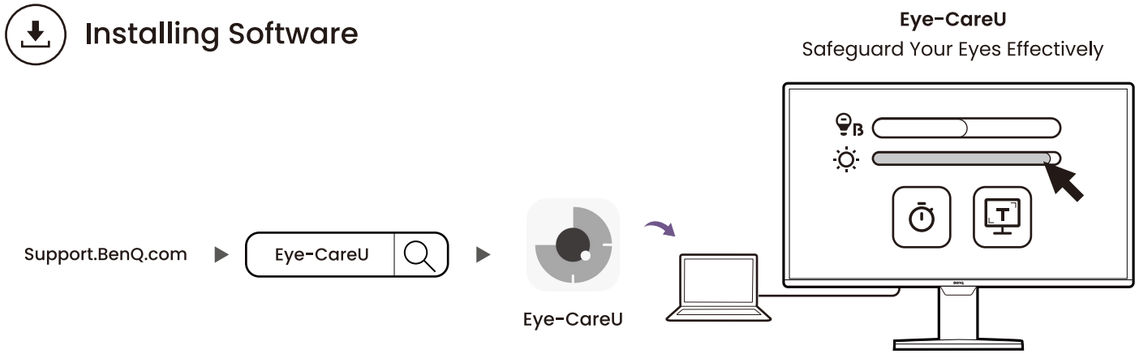

Angle adjustment

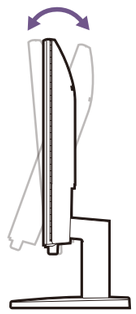



(For models with HDMI inputs)

The terms HDMI, HDMI High-Definition Multimedia Interface, HDMI Trade Dress and the HDMI Logos are trademarks or registered trademarks of HDMI Licensing Administrator, Inc.