QSFP112-400GB-AOC-1M-NV-AO

NVIDIA® Compatible TAA 400GBase-AOC QSFP112 to QSFP112 Active Optical Cable (850nm, MMF, 1m, CMIS 5.0)

Features:

- 4 Independent Parallel Optical Channels
- Hot-Pluggable
- Each Channel Data Rate Up to 53.12GBaud
- QSFP112 MSA Compliant
- CMIS 5.0 Compliant
- Up to 50m Link Over OM4 Multi-Mode
- Operating Temperature: 15 to 70 Celsius
- LSZH Jacket
- RoHS Compliant and Lead-Free



Applications:

- 400GBase Ethernet

Product Description

This is an NVIDIA® compatible 400GBase-AOC QSFP112 to QSFP112 active optical cable that operates over multi-mode fiber with a maximum reach of 1.0m (3.3ft). At a wavelength of 850nm, it has been programmed, uniquely serialized, and data-traffic and application tested to ensure it is 100% compliant and functional. This active optical cable is TAA (Trade Agreements Act) compliant, and is built to comply with MSA (Multi-Source Agreement) standards. We stand behind the quality of our products and proudly offer a limited lifetime warranty.

AddOn's transceivers are RoHS compliant and lead-free.

TAA refers to the Trade Agreements Act (19 U.S.C. & 2501-2581), which is intended to foster fair and open international trade. TAA requires that the U.S. Government may acquire only "U.S.-made or designated country end products."

TAA COMPLIANT

Absolute Maximum Ratings

Parameter	Symbol	Min.	Max.	Unit
Storage Ambient Temperature	Tstg	-40	+85	°C
Relative Humidity – Storage	RHs	0	85	%
Relative Humidity – Operating	RHo	0	85	%
Module Supply Voltage	Vcc	-0.5	3.6	V

Notes:

1. Exceeding the Absolute Maximum Ratings may cause irreversible damage to the device. The device is not intended to be operated under the condition of simultaneous Absolute Maximum Ratings, a condition which may cause irreversible damage to the device. RH is a non-condensing condition.

Recommended Operating Conditions

Parameter	Symbol	Min	Typ.	Max.	Unit
Case Operating Temperature	Tc	+15	+35	+70	°C
Module Supply Voltage	Vcc	3.14	3.3	3.46	V
Single Module Supply Current	I_{IN}		2350		mA
Signaling Speed Per Channel	S		53.12		GBaud

Cable Specifications

Parameter	Symbol
Minimum Bend Radius (mm)	30
Cable Diameter (mm)	3.0 ± 0.5

Electrical Characteristics

Parameter	Symbol	Min.	Typ.	Max.	Unit	Notes
Transmitter						
Tx_Data Differential Input Voltage	VIN	750			mV	
Tx_Data Differential Input Impedance	ZIN		100		Ω	
Receiver						
Rx_Data Differential Output Voltage	VOUT			845	mV	
Rx_Data Differential Output Impedance	ZOUT	90	100	110	Ω	
Link BER	BER			$24E^{-4}$		1

Notes:

1. Better than $2.4E^{-4}$ @53.12GBaud PRBS31Q.

Pin Descriptions

Pin	Symbol	Name/Description	Notes
1	GND	Module Ground.	
2	Tx2n	Transmitter Inverted Data Input.	
3	Tx2p	Transmitter Non-Inverted Data Input.	
4	GND	Module Ground.	
5	Tx4n	Transmitter Inverted Data Input.	
6	Tx4p	Transmitter Non-Inverted Data Input.	
7	GND	Module Ground.	
8	ModSelL	Module Select.	
9	ResetL	Module Reset.	
10	VccRx	+3.3V DC Receiver Power Supply.	
11	SCL	2-Wire Serial Clock.	
12	SDA	2-Wire Serial Data.	
13	GND	Module Ground.	
14	Rx3p	Receiver Non-Inverted Data Output.	
15	Rx3n	Receiver Inverted Data Output.	
16	GND	Module Ground.	
17	Rx1p	Receiver Non-Inverted Data Output.	
18	Rx1n	Receiver Inverted Data Output.	
19	GND	Module Ground.	
20	GND	Module Ground.	
21	Rx2n	Receiver Inverted Data Output.	
22	Rx2p	Receiver Non-Inverted Data Output.	
23	GND	Module Ground.	
24	Rx4n	Receiver Inverted Data Output.	
25	Rx4p	Receiver Non-Inverted Data Output.	
26	GND	Module Ground.	
27	ModPrsL	Module Present.	
28	IntL/RxLOS	Interrupt/Optional RxLOS.	
29	VccTx	+3.3V DC Transmitter Power Supply.	
30	Vcc1	+3.3V DC Power Supply.	
31	LPMode/TxDis	Low-Power Mode/Optional TxDisable.	
32	GND	Module Ground.	
33	Tx3p	Transmitter Non-Inverted Data Input.	
34	Tx3n	Transmitter Inverted Data Input.	
35	GND	Module Ground.	

36	Tx1p	Transmitter Non-Inverted Data Input.	
37	Tx1n	Transmitter Inverted Data Input.	
38	GND	Module Ground.	

Pin Assignments

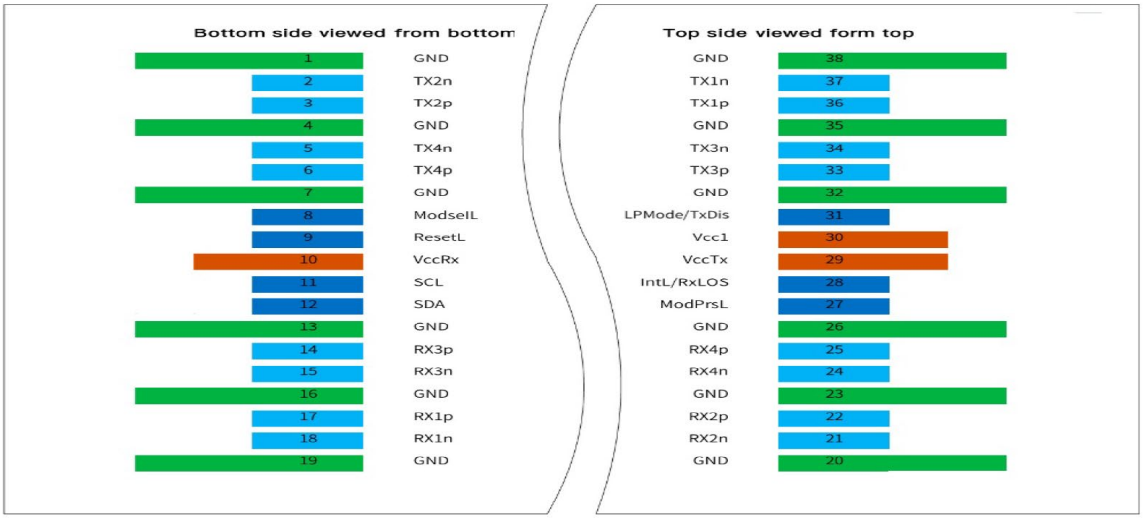

Block Diagram

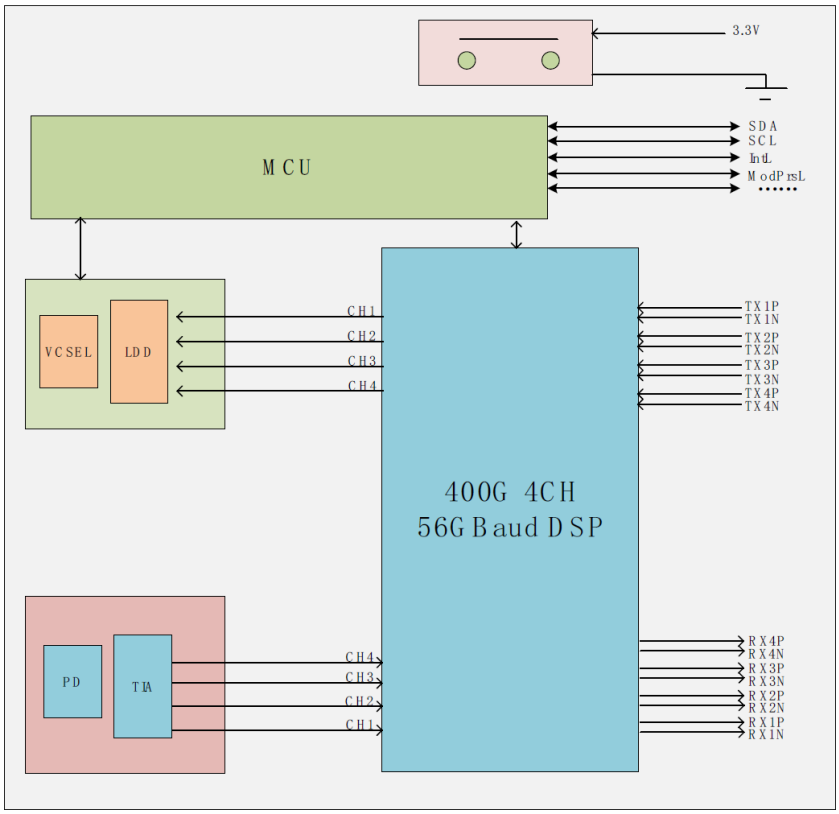

Electrical Interface

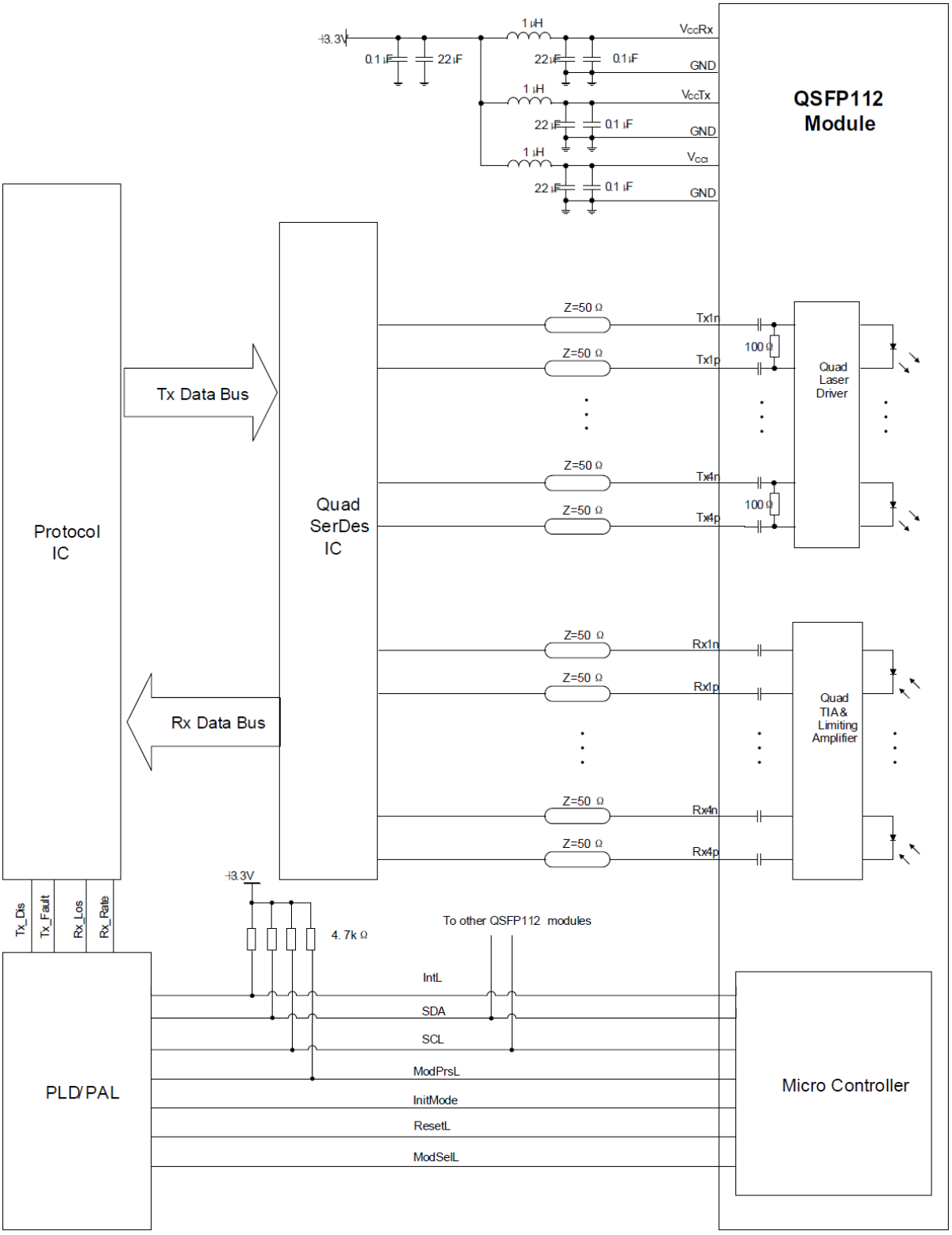

Mechanical Specifications

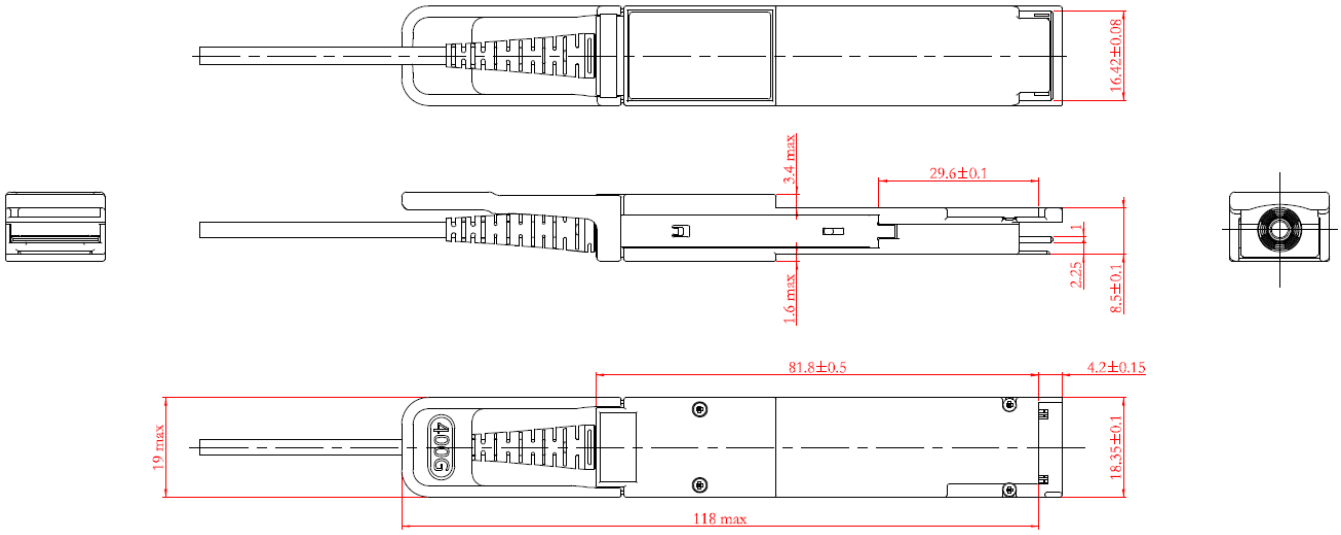

Notes:

1. Tolerance: ± 0.1mm.
2. Others according to QSFP112 MSA or customer specifications.
3. Light port according to fiber connector specifications.

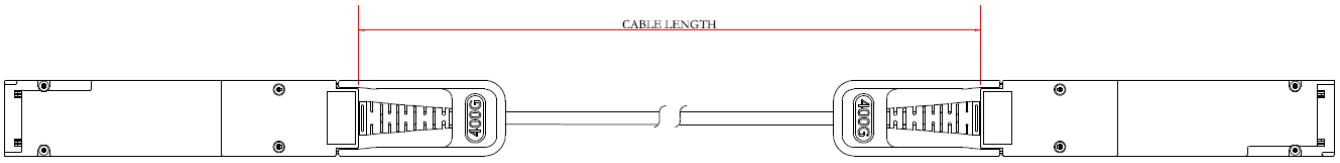

Notes:

1. Cable tolerance: +4%/-0%.

About AddOn Networks

In 1999, AddOn Networks entered the market with a single product. Our founders fulfilled a severe shortage for compatible, cost-effective optical transceivers that compete at the same performance levels as leading OEM manufacturers. Adhering to the idea of redefining service and product quality not previously had in the fiber optic networking industry, AddOn invested resources in solution design, production, fulfillment, and global support.

Combining one of the most extensive and stringent testing processes in the industry, an exceptional free tech support center, and a consistent roll-out of innovative technologies, AddOn has continually set industry standards of quality and reliability throughout its history.

Reliability is the cornerstone of any optical fiber network and is ingrained in AddOn's DNA. It has played a key role in nurturing the long-term relationships developed over the years with customers. AddOn remains committed to exceeding industry standards with certifications ranging from NEBS Level 3 to ISO 9001:2015 with every new development while maintaining the signature reliability of its products.



U.S. Headquarters

Email: sales@addonnetworks.com

Telephone: +1 877.292.1701

Fax: 949.266.9273

Europe Headquarters

Email: salesemea@addonnetworks.com

Telephone: +44 1285 842070