LG

MFL05849972601REV02

43NU70*
43NU71*
43NU80*
43NU83*
43NU85*
50NU80*





www.lg.com

PDF

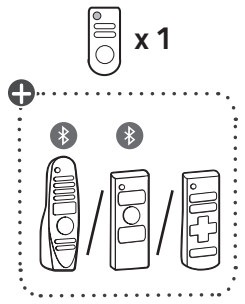



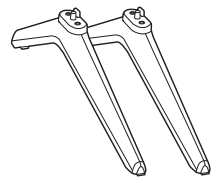



1

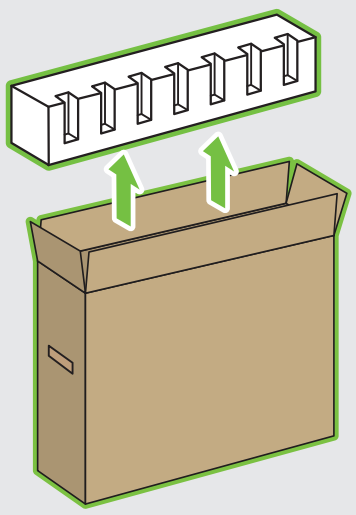

2

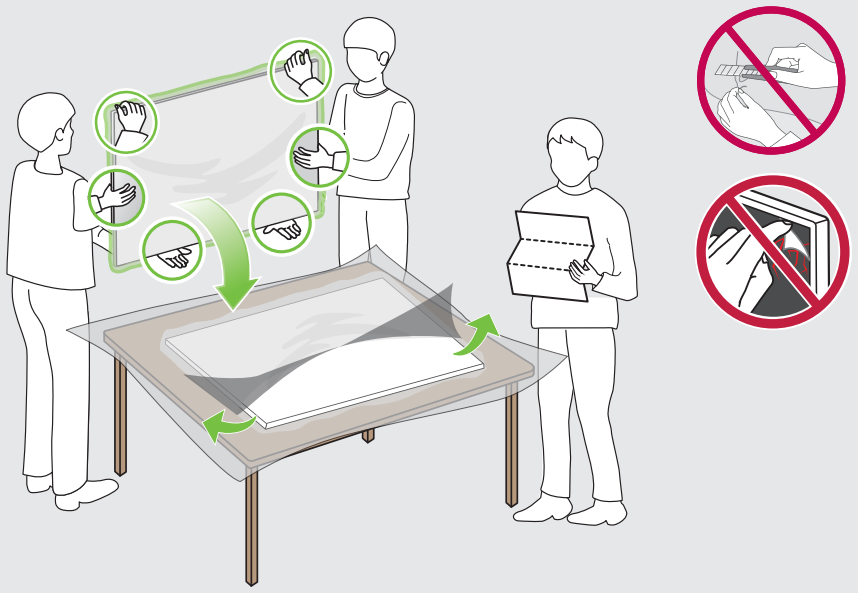

1

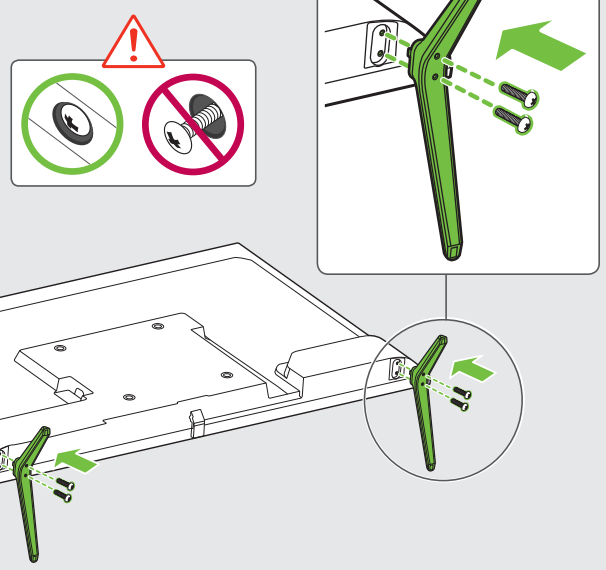

2

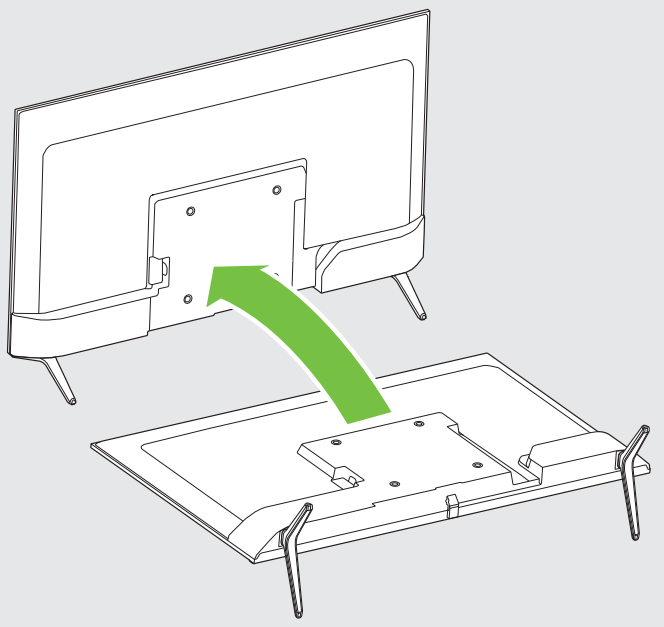

3

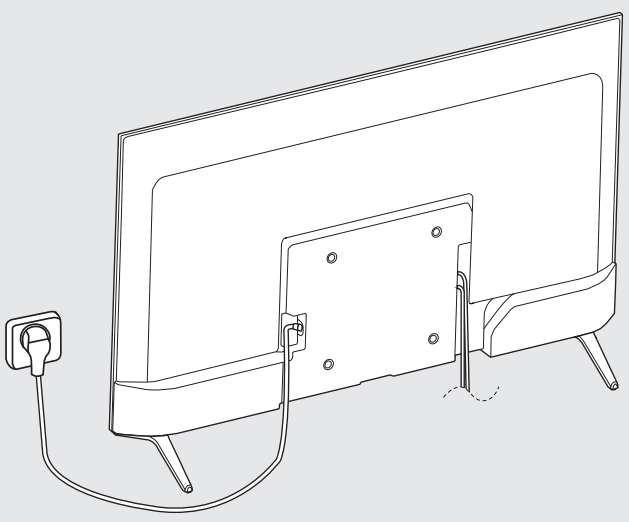

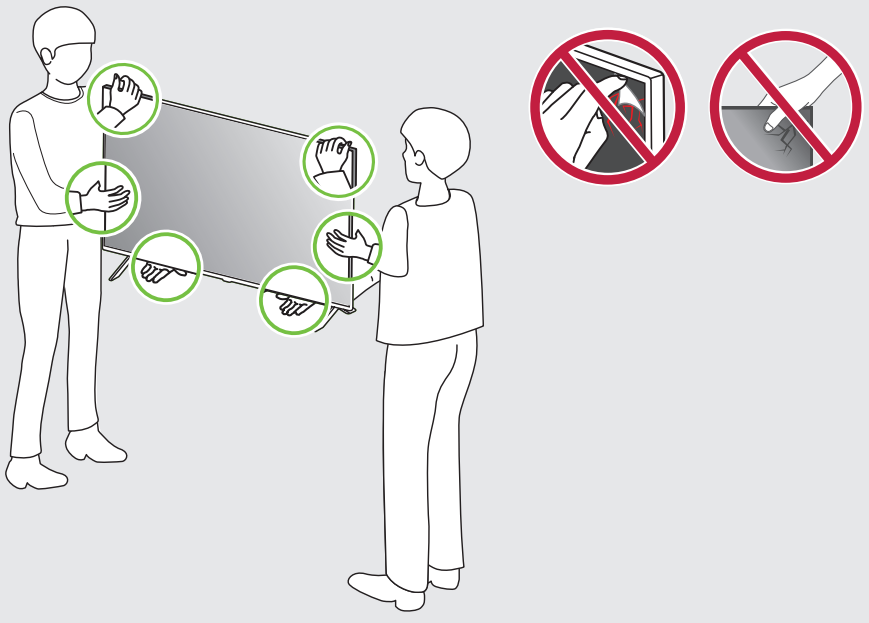

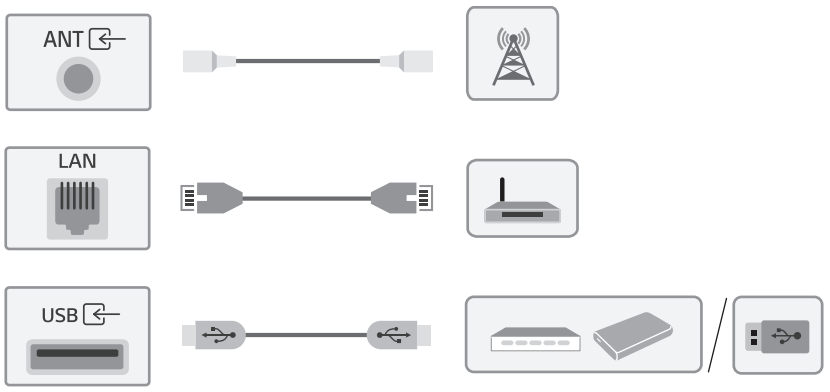

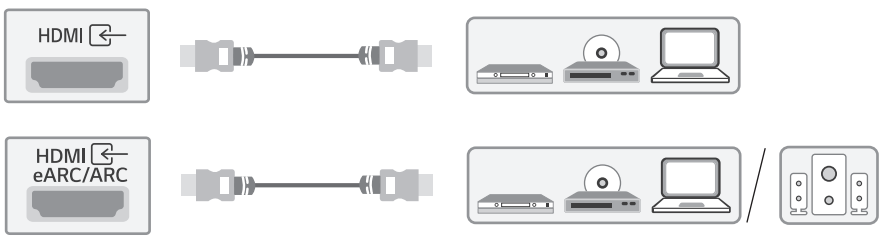

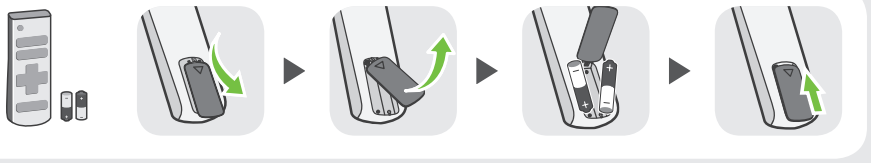

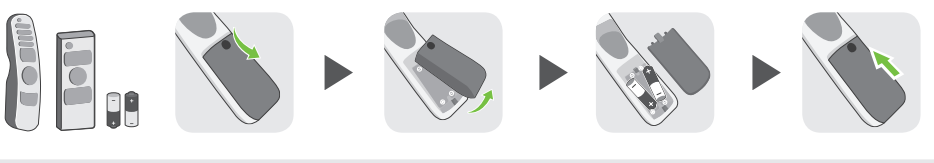

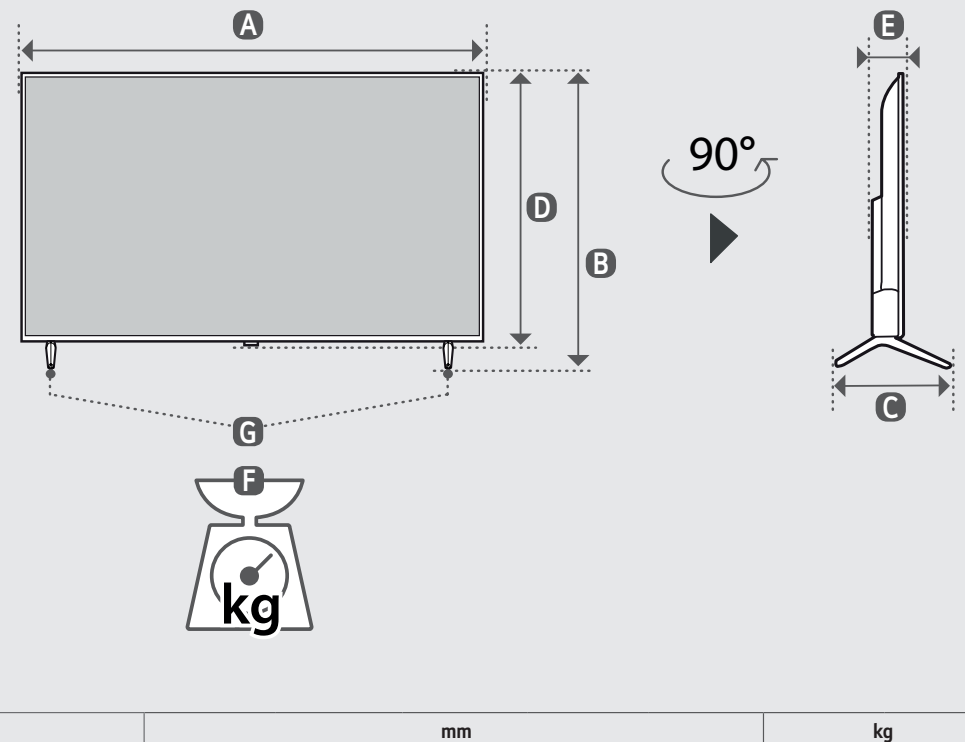

	mm (inches / pulgadas / po / pol.)					kg (lbs / libras / lb)	
	A	B	C	D	E	F	F - G
43NU70* 43NU71* 43NU80* 43NU83* 43NU85*	957 (37.6)	626 (24.6)	251 (9.8)	560 (22.0)	67.8 (2.6)	5.7 (12.5)	5.6 (12.3)
50NU80*	1 110 (43.7)	711 (27.9)	251 (9.8)	646 (25.4)	67.8 (2.6)	7.2 (15.8)	7.1 (15.6)

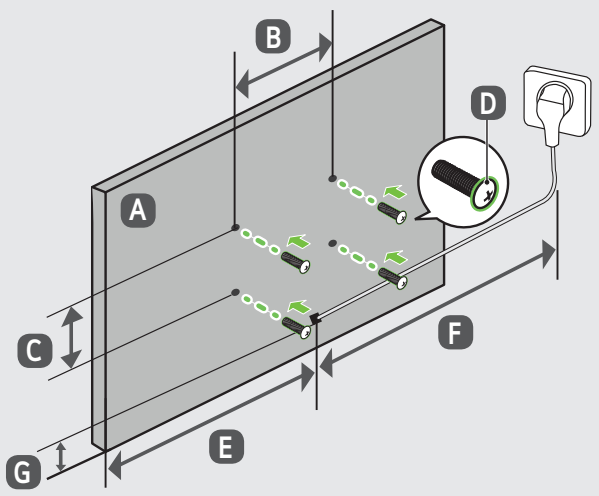

mm (inches / pulgadas / po / pol.)

A	B x C (mm)	D	E (mm)	F (m)	G (mm)
43NU70* 43NU71* 43NU80* 43NU83* 43NU85*	200 x 200 (7.8 x 7.8) inches	M6	329 (12.9) inches	≧1.5 (59.0) inches	137 (5.3) inches
50NU80*			407 (16.0) inches		

* : 0~9, A~Z

Printed in Korea
Imprimé en Corée