Juniper Networks | Engineering Simplicity

SSR1200 Appliance Hardware Guide

Published
2023-03-20

Juniper Networks, Inc.
1133 Innovation Way
Sunnyvale, California 94089
USA
408-745-2000
www.juniper.net

Juniper Networks, the Juniper Networks logo, Juniper, and Junos are registered trademarks of Juniper Networks, Inc. in the United States and other countries. All other trademarks, service marks, registered marks, or registered service marks are the property of their respective owners.

Juniper Networks assumes no responsibility for any inaccuracies in this document. Juniper Networks reserves the right to change, modify, transfer, or otherwise revise this publication without notice.

SSR1200 Appliance Hardware Guide
Copyright © 2023 Juniper Networks, Inc. All rights reserved.

The information in this document is current as of the date on the title page.

YEAR 2000 NOTICE

Juniper Networks hardware and software products are Year 2000 compliant. Junos OS has no known time-related limitations through the year 2038. However, the NTP application is known to have some difficulty in the year 2036.

END USER LICENSE AGREEMENT

The Juniper Networks product that is the subject of this technical documentation consists of (or is intended for use with) Juniper Networks software. Use of such software is subject to the terms and conditions of the End User License Agreement ("EULA") posted at https://support.juniper.net/support/eula/. By downloading, installing or using such software, you agree to the terms and conditions of that EULA.

Table of Contents

About This Guide | vi

1 Overview

SSR1200 Appliance Overview | 2

SSR1200 Chassis | 3

- Front Panel of an SSR1200 | 3
- Rear Panel of an SSR1200 | 4
- Chassis Physical Specifications for SSR1200 | 5
- Chassis Status LEDs | 5
- Network Port LEDs | 6
- Cooling System | 8
- Power System | 9

2 Site Planning, Preparation, and Specifications

Site Preparation Checklist for SSR1200 | 15

SSR1200 Site Guidelines and Requirements | 16

- General Site Installation Guidelines | 17
- Site Electrical Wiring Guidelines | 17
- Environmental Requirements and Specifications for SSR1200 | 19
- Clearance Requirements for Hardware Maintenance of SSR1200 | 19
- Rack Requirements for SSR1200 | 20

Cable Specifications and Pinouts for SSR1200 | 23

- Transceiver Support for SSR1200 | 23

3 Initial Installation and Configuration

Unpack and Mount an SSR1200 | 25

- Tools and Parts Required to Unpack the SSR1200 Appliance | 25

Unpack an SSR1200 | 25

Verify Parts Received with the SSR1200 | 26

Install the SSR1200 in a Rack | 27

Connect SSR1200 to Power | 30

Connect Earth Ground to SSR1200 | 30

Connect Power to SSR1200 | 32

Power Off the SSR1200 | 34

Connect SSR1200 to External Devices | 35

Connect SSR1200 to a Management Console | 35

Onboarding an SSR Conductor-Managed SSR1200 onto Mist Cloud | 36

4 **Maintaining Components**

Maintaining the SSR1200 Hardware Components | 46

SSR1200 Power Supply Maintenance | 46

Replacing an AC Power Supply on the SSR1200 | 46

Removing the AC Power Supply from an SSR1200 | 47

Installing the AC Power Supply in an SSR1200 | 47

Unmount the SSR1200 Chassis | 48

Remove the SSR1200 from a Rack | 48

5 **Contacting Customer Support and Returning the Chassis or Components**

Contacting Customer Support and Returning the Chassis or Components | 51

How to Return a Hardware Component to Juniper Networks, Inc. | 51

Locate the Chassis Serial Number ID Label | 52

Contact Customer Support to Obtain Return Material Authorization | 53

Guidelines for Packing and Shipping Hardware Components | 54

6 **Safety and Compliance Information**

Definitions of Safety Warning Levels | 56

General Safety Guidelines and Warnings | 57

Restricted Access Warning | 59

Qualified Personnel Warning | 60

Prevention of Electrostatic Discharge Damage | 61

Fire Safety Requirements | 62

Laser and LED Safety Guidelines and Warnings | 64

Chassis and Component Lifting Guidelines | 66

Radiation from Open Port Apertures Warning | 67

Maintenance and Operational Safety Guidelines and Warnings | 68

Action to Take After an Electrical Accident | 74

General Electrical Safety Guidelines and Warnings | 74

SSR1200 Agency Approvals | 76

FCC Declarations | 77

Lithium Battery Declaration | 78

About This Guide

Use this guide to install hardware and perform initial software configuration, routine maintenance, and troubleshooting for the SSR1200 appliance. After completing the installation and basic configuration procedures covered in this guide, refer to the Session Smart Router software documentation for information about further software configuration.

1
CHAPTER

Overview

SSR1200 Appliance Overview | 2

SSR1200 Chassis | 3

SSR1200 Appliance Overview

IN THIS SECTION

- Benefits of SSR1200 | 2
- Field-Replaceable Units in SSR1200 Appliances | 3

The Juniper Networks SSR1200 is a 1-U fixed-configuration appliance that is ideal for large branch and small data center or campus deployments. Powered by the Juniper Session Smart Router (SSR) software, the SSR1200 provides secure and resilient WAN connectivity.

NOTE: To use the SSR1200, you must purchase the SSR software subscription license that is sold separately. You can onboard and monitor the SSR1200 in a cloud network by using Juniper Mist™.

Benefits of SSR1200

- **Zero Trust Security (ZTS)**—The SSR1200 ensures ZTS by authenticating all routes and encrypting all session traffic. Applications, devices, or users cannot initiate any session that does not comply with the authentication policies and access rules. The SSR1200 supports Layer 2 through Layer 5 stateful firewall functions, including DoS/DDoS protection, NAT, encryption, VPN, and traffic filtering.
- **Adaptive encryption**—The SSR1200 automatically detects traffic encrypted using HTTPS or IPsec and does not re-encrypt such traffic. This capability results in improved performance and reduced overhead due to double encryption.
- **Simplified onboarding and monitoring with Juniper Mist WAN Assurance**—You can quickly onboard the SSR1200 to the Mist Cloud using the claim code or QR code. This helps in reducing the operational complexity and simplifying the deployment and configuration process.

  NOTE: Starting from SSR Release 6.0, you can manage the SSR1300 using Juniper Mist WAN Assurance.

Field-Replaceable Units in SSR1200 Appliances

Field-replaceable units (FRUs) are components that you can replace at your site. The following are the two types of SSR1200 FRUs:

- Hot-insertable and hot-removable—You can remove and replace these components without powering off the appliance or disrupting the appliance function.
- Hot-pluggable—You can remove and replace these components without powering off the appliance, but the appliance function is interrupted until you replace the component.

The FRUs in SSR1200 appliances are:

- Power supplies (hot-insertable and hot-removable)
- Transceivers (hot-pluggable)

SSR1200 Chassis

IN THIS SECTION

- Front Panel of an SSR1200 | 3
- Rear Panel of an SSR1200 | 4
- Chassis Physical Specifications for SSR1200 | 5
- Chassis Status LEDs | 5
- Network Port LEDs | 6
- Cooling System | 8
- Power System | 9

Front Panel of an SSR1200

Figure 1 on page 4 shows the front panel of an SSR1200. The SSR1200 comes with a claim code that you can use to onboard the SSR1200 to Juniper Mist.

Figure 1: Front Panel Components of SSR1200

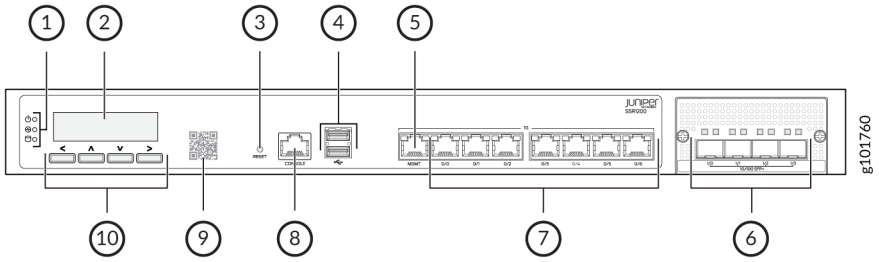

1– Chassis LEDs	6– 1/10 GbE SFP+ ports (1/0 through 1/3)
2– LCD screen	7– 1 GbE Ethernet ports (0/0 through 0/6)
3– RESET button	8– Console port
4– USB 3.0 ports	9– Claim code
5– 1 GbE management port (for Mist operations)	10– Navigation buttons for LCD screen (reserved for future use)

Rear Panel of an SSR1200

Figure 2 on page 4 shows the rear panel of an SSR1200.

Figure 2: Rear Panel Components of SSR1200

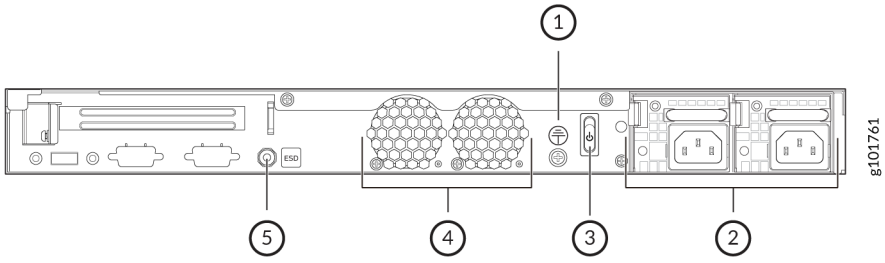

1– Earth grounding	4– Fans
2– AC power supply units	5– ESD point
3– Power switch	

Chassis Physical Specifications for SSR1200

Table 1 on page 5 summarizes the physical specifications of SSR1200.

Table 1: Physical Specifications of SSR1200

Model	Height	Width	Depth	Weight
SSR1200	44 mm	438 mm	431 mm	16.5 kg (36.38 lbs.)

Chassis Status LEDs

Figure 3 on page 5 shows the chassis status LEDs on the front panel, and Table 2 on page 5 describes the LEDs.

Figure 3: SSR1200 Chassis Status LEDs

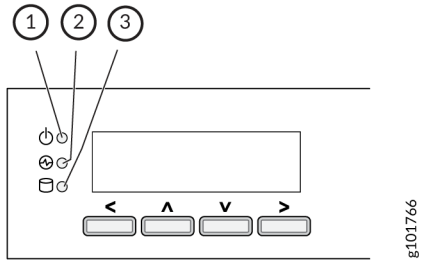

Table 2: SSR1200 Chassis Status LEDs

Callout	LED	Description
1	Power	• Solid green—The appliance is powered on. • Off—The appliance is powered off.

Table 2: SSR1200 Chassis Status LEDs *(Continued)*

Callout	LED	Description
2	Status	• Solid green—The appliance is operating normally. • Solid red—Indicates a major alarm, such as a hardware component failure. • Off—The appliance is not receiving power.
3	SSD	• Blinking amber—Indicates SSD activity. • Off—The SSD is not being accessed.

Network Port LEDs

Each network port uses two LEDs to indicate the link activity and speed. Figure 4 on page 6 shows the location of the LEDs on the SSR1200. Table 3 on page 7 describes the LEDs on the Ethernet ports and Table 4 on page 7 describes the LEDs on the SFP+ ports.

Figure 4: Network Port LEDs on an SSR1200

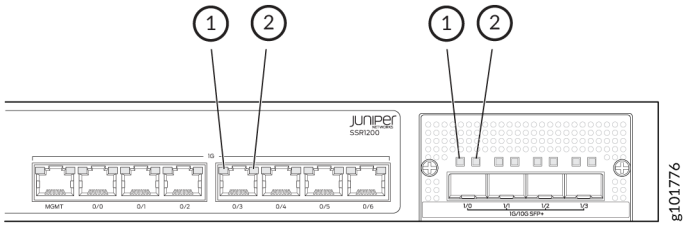

Table 3: Port LEDs on the Ethernet Ports

Callout	LED	Description
1	Link Activity (LED on the left)	• Blinking amber—Link is established and there is activity on the port. • Solid amber—Link is established but there is no activity on the port. • Off—There is no link established.
2	Speed (LED on the right)	• Solid amber—The link is operating at 1 Gbps speed. • Solid green—The link is operating at 100 Mbps speed. • Off—The link is operating at 10 Mbps speed.

Table 4: Port LEDs on the SFP+ Ports

Callout	LED	Description
1	Link Activity (LED on the left)	• Blinking green—Link is established and there is activity on the port. • Solid green—Link is established but there is no activity on the port. • Off—There is no link established.

Table 4: Port LEDs on the SFP+ Ports *(Continued)*

Callout	LED	Description
2	Speed (LED on the right)	• Solid green—The link is operating at 10 Gbps speed. • Off—The link is operating at 1 Gbps speed.

Cooling System

The cooling system of the SSR1200 consists of two fixed fans. The fan controller on the appliance monitors the temperature of the chassis and adjusts the fan speed according to the temperature. The SSR1200 appliances have front-to-back airflow. The air is pulled in through the front of the chassis toward the fan modules, from where it is exhausted out of the chassis. The fans are not field-replaceable.

Figure 5: Airflow Through the SSR1200 Chassis

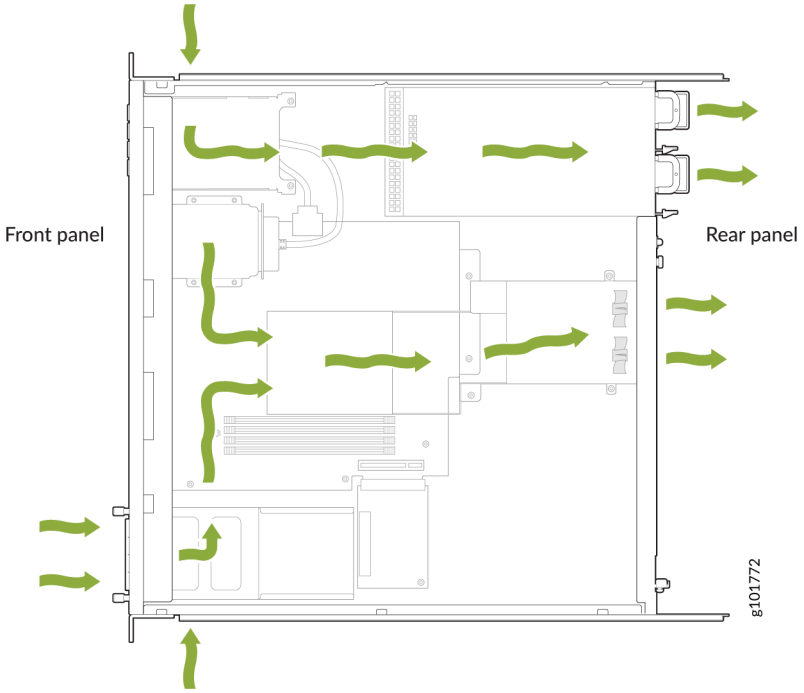

Power System

IN THIS SECTION

- AC Power Cord Specifications for SSR1200 | **10**

The SSR1200 appliance ships with two AC power supply units (1+1 redundancy) preinstalled. Each power supply unit is a hot-removable and hot-insertable field-replaceable unit (FRU) when the second power supply is installed and running. You can remove and replace either one of them without powering off the appliance or disrupting the appliance functions.

NOTE: If both power supply units are installed, and if only one power supply unit is connected to the power source, the appliance raises an alarm.

Each power supply has its own fan and is cooled by its own internal cooling system.

Table 5 on page 10 lists the power specifications for the SSR1200 appliance.

Table 5: Power Supply Specifications for SSR1200

Model	AC Input Voltage (Operating Range)	AC Input Line Frequency	AC Input Current Rating	Maximum Power Consumption	Power Supply Type
SSR1200	100–240 VAC	50–60 Hz	3–5 A	300 W	External, hot swappable

AC Power Cord Specifications for SSR1200

We ship detachable region-specific AC power cords with the chassis. The coupler is type C15 as described by International Electrotechnical Commission (IEC) standard 60320. The plug end of the power cord fits into the power source outlet that is standard for your geographical location.

Table 6 on page 10 lists the AC power cords specifications provided for the power supplies for each country or region.

Table 6: AC Power Cord Specifications for SSR1200

Country/ Region	Electrical Specifications	Plug Standards	Juniper Model Number	Graphic
Argentina	250 VAC, 10 A, 50 Hz	IRAM 2073 Type RA/3	CBL-EX-PWR-C13-AR	No graphic available
Australia	250 VAC, 10 A, 50 Hz	AS/NZS 3112 Type SAA/3	CBL-EX-PWR-C13-AU	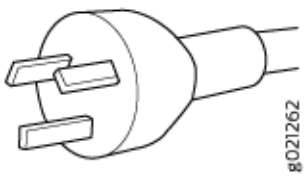

Table 6: AC Power Cord Specifications for SSR1200 *(Continued)*

Country/ Region	Electrical Specifications	Plug Standards	Juniper Model Number	Graphic
Brazil	250 VAC, 10 A, 50 Hz	NBR 14136 Type BR/3	CBL-EX-PWR-C13-BR	No graphic available
China	250 VAC, 10 A, 50 Hz	GB 1002-1996 Type PRC/3	CBL-EX-PWR-C13-CH	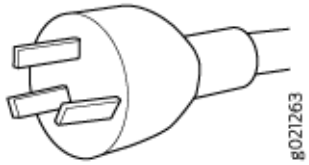
Europe (except Italy, Switzerland, and United Kingdom)	250 VAC, 10 A, 50 Hz	CEE (7) VII Type VIIG	CBL-EX-PWR-C13-EU	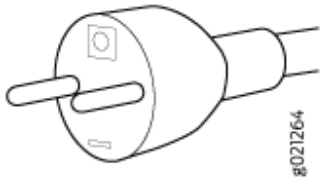
India	250 VAC, 10 A, 50 Hz	IS 1293 Type IND/3	CBL-EX-PWR-C13-IN	No graphic available
Israel	250 VAC, 10 A, 50 Hz	SI 32/1971 Type IL/3G	CBL-EX-PWR-C13-IL	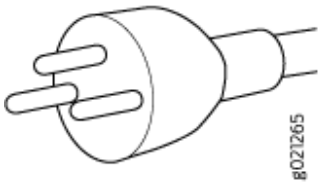
Italy	250 VAC, 10 A, 50 Hz	CEI 23-16 Type I/3G	CBL-EX-PWR-C13-IT	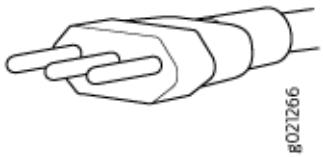

Table 6: AC Power Cord Specifications for SSR1200 *(Continued)*

Country/ Region	Electrical Specifications	Plug Standards	Juniper Model Number	Graphic
Japan	125 VAC, 12 A, 50 Hz or 60 Hz	SS-00259 Type VCTF	CBL-EX-PWR-C13-JP	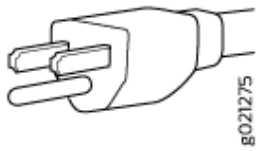 g021275
Korea	250 VAC, 10 A, 50 Hz or 60 Hz	CEE (7) VII Type VIIGK	CBL-EX-PWR-C13-KR	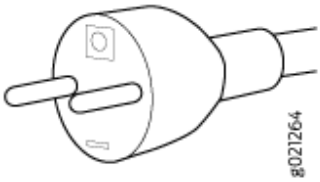 g021264
North America	125 VAC, 13 A, 60 Hz	NEMA 5-15 Type N5-15	CBL-EX-PWR-C13-US	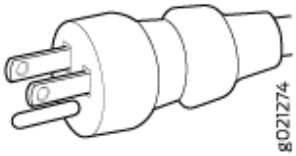 g021274
South Africa	250 VAC, 10 A, 50 Hz	SABS 164/1:1992 Type ZA/3	CBL-EX-PWR-C13-SA	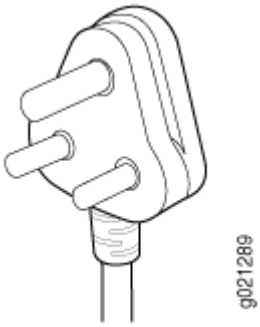 g021289
Switzerland	250 VAC, 10 A, 50 Hz	SEV 6534-2 Type 12G	CBL-EX-PWR-C13-SZ	No graphic available

Table 6: AC Power Cord Specifications for SSR1200 *(Continued)*

Country/ Region	Electrical Specifications	Plug Standards	Juniper Model Number	Graphic
United Kingdom	250 VAC, 10 A, 50 Hz	BS 1363/A Type BS89/13	CBL-EX-PWR-C13-UK	 g021271

CHAPTER 2

Site Planning, Preparation, and Specifications

Site Preparation Checklist for SSR1200 | 15

SSR1200 Site Guidelines and Requirements | 16

Cable Specifications and Pinouts for SSR1200 | 23

Site Preparation Checklist for SSR1200

The checklist in Table 7 on page 15 summarizes the tasks you need to perform when preparing a site for SSR1200 installation.

Table 7: Site Preparation Checklist for SSR1200 Installation

Item or Task	Additional Information
Environment	
Verify that environmental factors such as temperature and humidity do not exceed device tolerances.	"Environmental Requirements and Specifications for SSR1200" on page 19
Power	
Measure the distance between the external power sources and the device installation site.	
Locate sites for connection of system grounding.	
Calculate the power consumption and requirements.	
Rack Requirements	
Verify that your rack meets the minimum requirements.	"Rack Requirements for SSR1200" on page 20
Rack Installation	

Table 7: Site Preparation Checklist for SSR1200 Installation *(Continued)*

Item or Task	Additional Information
Plan the rack location, including required space clearances.	"Clearance Requirements for Hardware Maintenance of SSR1200" on page 19
Secure the rack to the floor and building structure.	
Cables	
• Acquire cables and connectors. • Review the maximum distance allowed for each cable. Choose the length of the cable based on the distance between the hardware components being connected. • Plan the cable routing and management.	

SSR1200 Site Guidelines and Requirements

IN THIS SECTION

- General Site Installation Guidelines | **17**
- Site Electrical Wiring Guidelines | **17**
- Environmental Requirements and Specifications for SSR1200 | **19**
- Clearance Requirements for Hardware Maintenance of SSR1200 | **19**

Rack Requirements for SSR1200 | 20

General Site Installation Guidelines

The following precautions help you plan an acceptable operating environment for your SSR1200 appliance and avoid environmentally caused equipment failures:

- Keep the area around the chassis free from dust.
- Follow prescribed airflow guidelines to ensure that the cooling system functions properly and that exhaust from other equipment does not blow into the intake vents of the appliance.
- Follow the ESD procedures to avoid damaging equipment. Static discharge can cause components to fail completely or intermittently over time.
- Install the appliance in a secure area, so that only authorized personnel can access the appliance.

Site Electrical Wiring Guidelines

Table 8 on page 18 describes the factors you must consider while planning the electrical wiring at your site.



WARNING: You must provide a properly grounded and shielded environment and use electrical surge-suppression devices.

Avertissement Vous devez établir un environnement protégé et convenablement mis à la terre et utiliser des dispositifs de parasurtension.

Table 8: Site Electrical Wiring Guidelines

Site Wiring Factor	Guidelines
Signaling limitations	If your site experiences any of the following problems, consult experts in electrical surge suppression and shielding: • Improperly installed wires cause radio frequency interference (RFI). • Damage from lightning strikes occurs when wires exceed recommended distances or pass between buildings. • Electromagnetic pulses (EMPs) caused by lightning damage unshielded conductors and electronic devices.
Radio frequency interference	To reduce or eliminate RFI from your site wiring, do the following: • Use a twisted-pair cable with a good distribution of grounding conductors. • If you must exceed the recommended distances, use a high-quality twisted-pair cable with one ground conductor for each data signal when applicable.
Electromagnetic compatibility	If your site is susceptible to problems with electromagnetic compatibility (EMC), particularly from lightning or radio transmitters, seek expert advice. Some of the problems caused by strong sources of electromagnetic interference (EMI) are: • Destruction of the signal drivers and receivers in the device • Electrical hazards as a result of power surges conducted over the lines into the equipment

Environmental Requirements and Specifications for SSR1200

The SSR1200 must be housed in dry, clean, well-ventilated, and temperature-controlled environment. Follow these environmental guidelines:

- The site must be dust-free because dust can clog air intake vent, reducing the efficiency of the cooling system.
- Maintain ambient airflow for normal operation. If the airflow is blocked or restricted, or if the intake air is too warm, the appliance might overheat.

The following table lists the environmental specifications for the SSR1200.

Table 9: Environmental Specifications for SSR1200

Description	Value
Operating temperature	0° C to 40° C (32° F to 104° F)
Storage temperature	-20° C to 70° C (-4° F to 158° F)

Clearance Requirements for Hardware Maintenance of SSR1200

When planning the site for installing an SSR1200, you must allow sufficient clearance around the installed chassis.

- For the operating temperature of the SSR1200 to be optimal, the airflow around the chassis must be unrestricted. See "Cooling System" on page 8 for more information about the airflow through the chassis.
- For service personnel to remove and install hardware components, and to accommodate the interface and power cable bend radius, there must be adequate space at the front and rear of the appliance. Allow at least 24 in. (61 cm) of space both at the front and the rear of the appliance.
- If you are mounting the appliance in a rack with other equipment, or if you are placing it on the desktop near other equipment, ensure that the exhaust from other equipment does not blow into the intake vents of the chassis.

Figure 6: Clearance Requirements for Hardware Maintenance of SSR1200

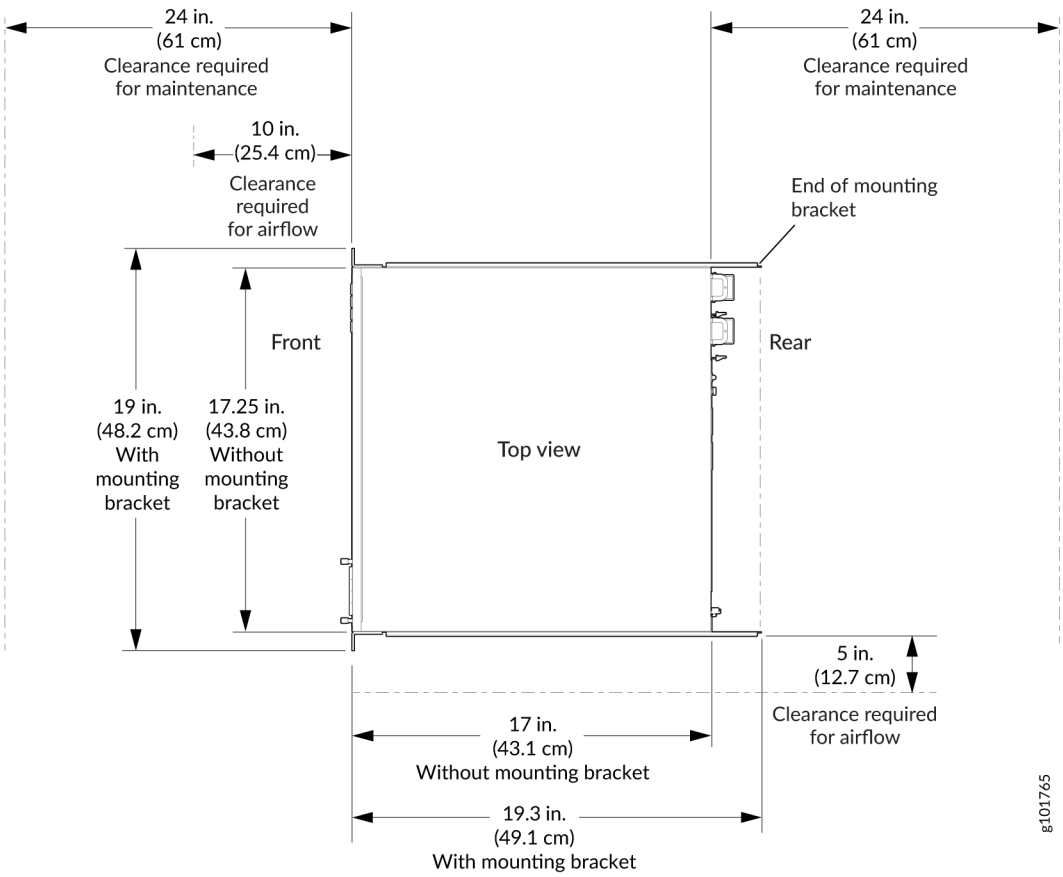

Rack Requirements for SSR1200

You can mount the SSR1200 on four-post racks. The rack mounting kit is shipped with the appliance. You can order a spare rack mounting kit (part number: SSR1200-RMK) separately if required. Table 10 on page 21 provides the rack requirements and specifications for SSR1200.

Table 10: Rack Requirements and Specifications

Rack Requirement	Guidelines
Rack type	Use a four-post rack with bracket holes or hole patterns that are spaced at 1-U increments (1.75 in. or 4.45 cm). Ensure that the rack meets the size and strength requirements to support the weight. A U is the standard rack unit defined in Cabinets, Racks, Panels, and Associated Equipment (document number EIA-310–D) published by the Electronics Industry Association.
Mounting bracket hole spacing	Ensure that the holes in the mounting brackets are spaced at 1 U (1.75 in. or 4.45 cm) so that the device can be mounted in any rack that provides holes that are spaced at that distance.

Table 10: Rack Requirements and Specifications *(Continued)*

Rack Requirement	Guidelines
Rack size and strength	• Ensure that the rack complies with the standards for a 19-in. rack as defined in Cabinets, Racks, Panels, and Associated Equipment (document number EIA-310–D) published by the Electronics Industry Association. • Use an 800-mm rack as defined in the four-part Equipment Engineering (EE) European telecommunications standard for equipment practice (document numbers ETS 300 119-1 through 119-4) published by the European Telecommunications Standards Institute (http://www.etsi.org). The horizontal spacing between the rails in a rack that complies with this standard is usually wider than the device's mounting brackets, which measure 19 in. (48.26 cm) from outer edge to outer edge. Use approved wing devices to narrow the opening between the rails as required. • Ensure that the rack rails are spaced widely enough to accommodate the external dimensions of the device chassis. The outer edges of the front-mounting brackets extend the width to 19 in. (48.26 cm). • Ensure that for four-post installations, the front and rear rack rails are spaced between 23.6 in. (60 cm) and 36 in. (91.4 cm) front-to-back. • Ensure that the rack is strong enough to support the weight of the device. The SSR1200 weighs about 36.38 lb (16.5 kg). • Ensure that the spacing of rails and adjacent racks allows for proper clearance around the device and rack.

Table 10: Rack Requirements and Specifications *(Continued)*

Rack Requirement	Guidelines
Rack connection to building structure	• Secure the rack to the building structure. • If earthquakes are a possibility in your geographical area, secure the rack to the floor. • Secure the rack to the ceiling brackets and to wall or floor brackets for maximum stability.

Cable Specifications and Pinouts for SSR1200

IN THIS SECTION

- Transceiver Support for SSR1200 | **23**

Transceiver Support for SSR1200

You can find information about the pluggable transceivers and connector types that are supported on your Juniper Networks device by using the Hardware Compatibility Tool. The tool also documents the optical and cable characteristics, where applicable, for each transceiver. You can search for transceivers by product—and the tool displays all the transceivers supported on that device—or by category, interface speed, or type. The list of supported transceivers for the SSR1200 is located at https://apps.juniper.net/hct/product/.



CAUTION: If you face a problem running a Juniper Networks device that uses a third-party optic or cable, the Juniper Networks Technical Assistance Center (JTAC) can help you diagnose the source of the problem. Your JTAC engineer might recommend that you check the third-party optic or cable and potentially replace it with an equivalent Juniper Networks optic or cable that is qualified for the device.

CHAPTER 3

Initial Installation and Configuration

Unpack and Mount an SSR1200 | 25

Connect SSR1200 to Power | 30

Connect SSR1200 to External Devices | 35

Onboarding an SSR Conductor-Managed SSR1200 onto Mist Cloud | 36

Unpack and Mount an SSR1200

SUMMARY

Unpack the appliance using the recommended tools and following the recommended procedure.

IN THIS SECTION

- Tools and Parts Required to Unpack the SSR1200 Appliance | **25**
- Unpack an SSR1200 | **25**
- Verify Parts Received with the SSR1200 | **26**
- Install the SSR1200 in a Rack | **27**

Tools and Parts Required to Unpack the SSR1200 Appliance

To unpack the appliance and prepare for installation, you need the following tools:

- Phillips (+) screwdriver, number 2
- A box cutter or packing knife to slice open the tape that seals the boxes

Unpack an SSR1200

The SSR1200 is shipped in a cardboard carton and secured with foam packing material.

NOTE: The SSR1200 is maximally protected inside the cardboard carton. Do not unpack it until you are ready to begin installation.

To unpack the SSR1200:

1. Move the cardboard carton to a staging area as close to the installation site as possible, where you have enough room to remove the components from the chassis.
2. Position the cardboard carton with the arrows pointing up.
3. Carefully open the top of the cardboard carton.
4. Remove the foam covering the top of the SSR1200.

5. Verify the parts received against the list in Table 11 on page 26.
6. Store the brackets and bolts inside the accessory box.
7. Save the shipping carton and packing materials in case you need to move or ship the appliance at a later time.

Verify Parts Received with the SSR1200

The shipment includes a packing list. Check the parts you receive in the shipping carton against the items on the packing list. The parts shipped depend on the configuration you order.

If any part on the packing list is missing, contact your customer service representative or contact Juniper customer care from within the U.S. or Canada by telephone at 1-888-314-5822. For international-dial or direct-dial options in countries without toll-free numbers, see https://www.juniper.net/support/requesting-support.html.

Table 11: Parts List for a Fully Configured SSR1200

Component	Quantity
SSR1200 Chassis Part number: SSR1200-CHAS	1
Power supply (preinstalled) Part number: SSR1200-AC-PS	2 AC
AC power cord appropriate for your geographical location	2
Fan	2

Table 11: Parts List for a Fully Configured SSR1200 *(Continued)*

Component	Quantity
Rack mount kit Part number: SSR1200-RMK	• 2 front mounting brackets • 2 side mounting rails • 2 rear mounting blades • 8 rack screws and cage nuts • 14 M4 flat-head screws
RJ-45 to USB A serial cable	1
Documentation Roadmap	1

Install the SSR1200 in a Rack

You can install an SSR1200 appliance into a four-post rack or a cabinet.

Complete these prerequisites before you install the appliance:

- Prepare the site for installation as described in "Site Preparation Checklist for SSR1200" on page 15.
- Be sure the site has adequate clearance for both airflow and hardware maintenance, as described in "SSR1200 Site Guidelines and Requirements" on page 16.
- Unpack the appliance as described in "Unpack an SSR1200" on page 25.

Ensure that you have Phillips (+) screwdriver, number 2.

NOTE: Installing the chassis in a rack requires two people: one person lifts the chassis while the other secures it to the rack.

NOTE: Ensure the rear of the chassis is supported throughout the process of mounting the appliance into the rack.

CAUTION: Before mounting the appliance on a rack or in a cabinet, have a qualified technician verify that the rack or cabinet is strong enough to support the appliance's weight. Have the technician verify also that the rack or cabinet is adequately supported at the installation site.

CAUTION: If you are installing more than one appliance on a rack or in a cabinet, install the first appliance at the bottom of the rack.

To mount the SSR1200 on a four-post rack:

1. Review the General Safety Guidelines and Warnings.
2. Wrap and fasten one end of the electrostatic discharge (ESD) cable grounding strap around your bare wrist, and connect the other end to a site ESD point.
3. Remove the SSR1200 from the shipping carton (see "Unpack an SSR1200" on page 25).
4. Attach the front mounting brackets to the front of the chassis, using the six flat-head screws provided. Then, attach the side mounting rails to the chassis, using the screws provided.

Figure 7: Install Front Mounting Brackets and Side Mounting Rails

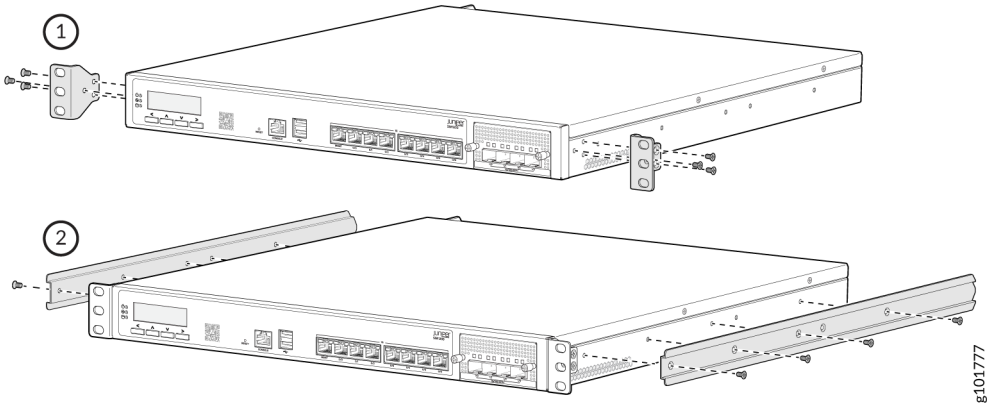

5. Have one person grasp both sides of the SSR1200 chassis, lift it, and position it in the rack so that the front mounting bracket holes align with the threaded holes in the rack rail.

NOTE: Ensure that the rear of the device is supported throughout the process of mounting the device into the rack.

6. While you're holding the SSR1200 in place, have a second person insert and tighten the rack mount screws to secure the front mounting brackets to the rack rails. Make sure to tighten the screws in the two bottom holes first and then tighten the screws in the two top holes next.

Figure 8: Install the SSR1200 Appliance in a Four-Post Rack

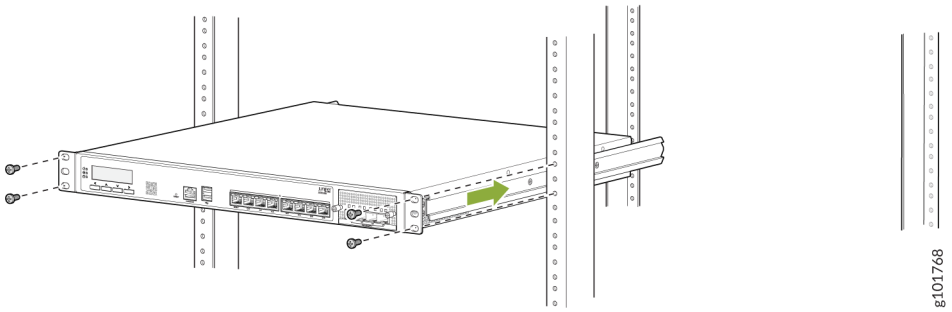

7. Continue to support the SSR1200 in place and have the second person slide the rear mounting blades into the channels of the side mounting rails.
8. Secure the rear mounting blades to the rack post, using rack mounting screws on each side.

Figure 9: Install the Rear Mounting Blades on an SSR1200 Appliance

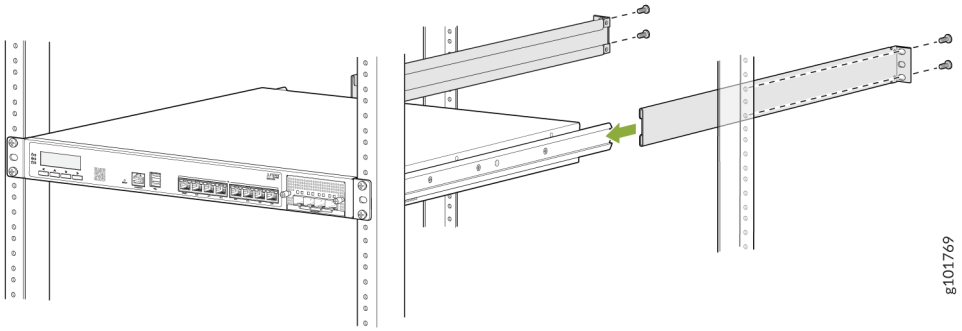

9. Check that the front mounting brackets on each side of the rack are lined up with each other.

Figure 10: SSR1200 Appliance Installed in a Four-Post Rack

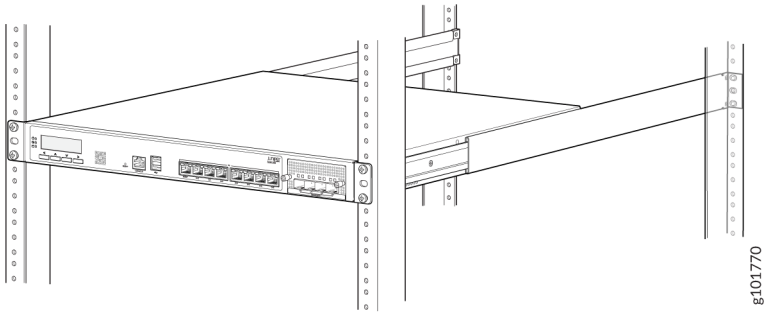

Connect SSR1200 to Power

SUMMARY

Connecting power to the SSR1200 appliance involves numerous steps and safety precautions to prevent equipment damage and personal injury.

IN THIS SECTION

- Connect Earth Ground to SSR1200 | **30**
- Connect Power to SSR1200 | **32**
- Power Off the SSR1200 | **34**

NOTE: To meet safety and electromagnetic interference (EMI) requirements and to ensure proper operation, you must connect the SSR1200 appliance to an earth ground before you connect it to power.

Connect Earth Ground to SSR1200

NOTE:

Before you connect an earth ground to the protective earthing terminal of an SSR1200 appliance, ensure that a licensed electrician has attached an appropriate grounding ring terminal

to the grounding cable you supply. Using a grounding cable with an incorrectly attached ring terminal can damage the appliance.

Before connecting the appliance to an earth ground, ensure that you have the following parts and tools available:

- An electrostatic discharge (ESD) grounding strap.
- Protective earthing ring terminal.
- Grounding cable for your appliance—The grounding cable must be 14 AWG (1.5 mm^2) stranded wire and should be rated 90 °C or per local electrical code.
- Grounding ring terminal for your grounding cable—This bracket attaches to the chassis grounding point located on the rear of the appliance.
- A Phillips screwdriver (not provided) to tighten the screw.

We recommend that you install heat-shrink tubing insulation around the crimped section of the earthing cable and ring terminal.

You ground the SSR1200 by connecting a grounding cable to earth ground and then attaching the grounding cable to the chassis grounding point located on the rear of the appliance. Under all circumstances, use this grounding connection to ground the chassis. For AC-powered systems, you must also use the grounding wire in the AC power cord along with the one-hole grounding ring terminal connection. This tested system meets or exceeds all applicable EMC regulatory requirements with the one-hole protective grounding ring terminal.

To ground the appliance:

1. Wrap and fasten one end of the ESD grounding strap around your wrist and connect the other end to a site ESD point.
2. Ensure that all grounding surfaces are clean and brought to a bright finish before grounding connections are made.
3. Connect the grounding cable to a proper earth ground, such as the rack in which the appliance is mounted.
4. Using a Phillips screwdriver, remove the M4 screw from the grounding point on the rear of the chassis.
5. Place the grounding cable ring terminal attached to the grounding cable over the grounding point.
6. Secure the grounding cable ring terminal to the grounding point with the M4 screw.

Figure 11: Connecting the Grounding Cable to the SSR1200

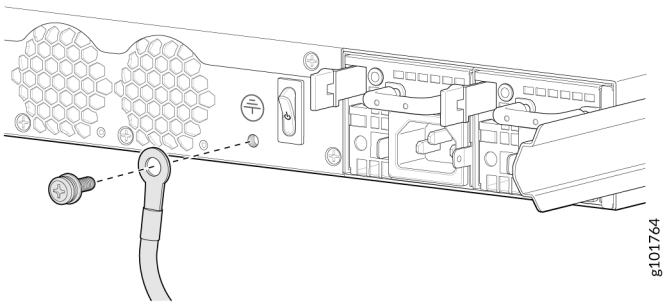

7. Dress the grounding cable and verify that it does not touch or block access to the appliance components and that it does not drape where people could trip on it.

> **NOTE**: The appliance should be permanently connected to ground during operation.

Connect Power to SSR1200

The AC power supply units (PSUs) in an SSR1200 are hot-removable and hot-insertable field-replaceable units (FRUs). You can remove and replace the PSUs without powering off the appliance or disrupting its functions.

Before you begin to connect AC power to the appliance:

- Ensure that you have connected the appliance chassis to an earth ground.

> ⚠ **CAUTION**: Before you connect power to the appliance, a licensed electrician must attach a cable ring terminal to the grounding and power cables that you supply. A cable with an incorrectly attached ring terminal can damage the appliance (for example, by causing a short circuit).
>
> To meet safety and electromagnetic interference (EMI) requirements and to ensure proper operation, you must connect the chassis to an earth ground before you connect it to power. For installations that require a separate grounding conductor to the chassis, use the protective earthing terminal on the appliance chassis to connect to the earth ground. The appliance gains additional grounding when you plug the PSU in the appliance to a grounded AC power outlet by using the AC power cord appropriate for your geographical location.

- Ensure that you have a power cord appropriate for your geographical location available to connect AC power to the appliance.
- Read "General Electrical Safety Guidelines and Warnings" on page 74 and "Action to Take After an Electrical Accident" on page 74.
- A power cord retainer strip (provided with the appliance)
- Ensure that you have taken the necessary precautions to prevent electrostatic discharge (ESD) damage.
- Ensure that you have an ESD grounding strap.
- If not already installed, install the power supplies in the appliance.

To connect AC power to an SSR1200:

1. Wrap and fasten one end of the ESD wrist strap around your bare wrist, and connect the other end of the strap to the ESD point on the device.
2. Ensure that the power supplies are fully inserted into the chassis.
3. Locate the AC power cords shipped with the SSR1200 appliance; the cords have plugs appropriate for your geographical location. See Table 6 on page 10.
4. Push the end of the power cord retainer strip into the hole adjacent to the input on the PSU until it snaps into place. Ensure that the loop in the retainer strip faces the input on the PSU (see Figure 12 on page 33).

Figure 12: Insert Power Cord Retainer Strip

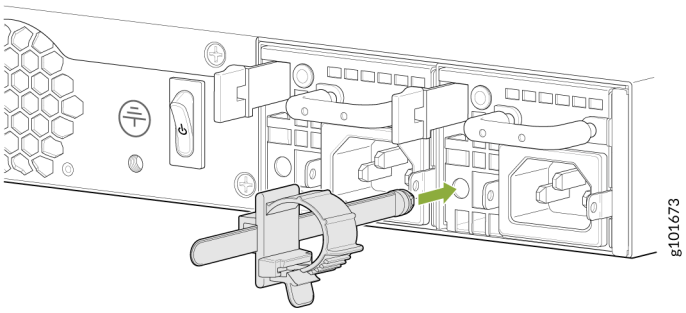

5. Press the small tab on the retainer strip to loosen the loop. Slide the loop until there is enough space to insert the power cord coupler through the loop into the input on the PSU.
6. Insert the power cord coupler firmly into the input on the power supply (see Figure 13 on page 34).
7. Slide the loop toward the PSU until it is snug against the base of the coupler.

Figure 13: Connect an AC Power Cord

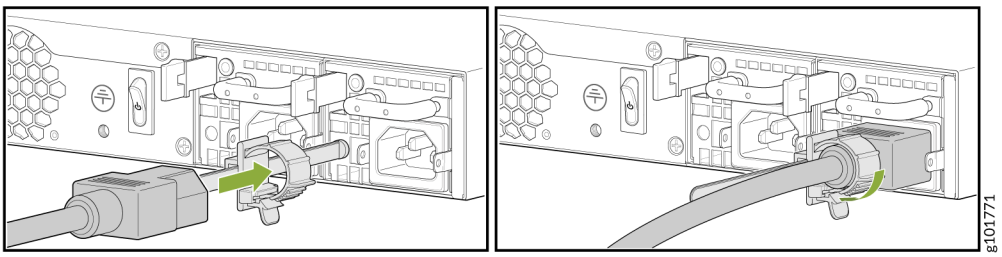

8. Press the tab on the loop and draw out the loop into a tight circle.
9. Repeat Step 4 and Step 8 to insert the second power cord.
10. If the AC power source outlet has a power switch, set it to the off (O) position.
11. Insert the power cord plug into an AC power source outlet.
12. If the AC power source outlet has a power switch, set it to the on (|) position.
13. Set the power switch on the appliance to the on (|) position.

Power Off the SSR1200

You can power off the SSR1200 in one of the following ways:

- Graceful shutdown—You can do a graceful shutdown in two ways:
  - Use the Linux `poweroff` command at the Console. The appliance begins gracefully shutting down the operating system and then powers itself off.
  - Press and hold the Power switch for less than 4 seconds. The appliance begins gracefully shutting down the operating system and then powers itself off.

  CAUTION: Use the graceful shutdown method to power off or reboot the appliance.

- Forced shutdown—Press and hold the Power switch for more than 4 seconds, then release. The appliance immediately powers itself off without shutting down the operating system.

  CAUTION: Forced shutdown can result in data loss and corruption of the file system. Use the forced shutdown method as a last resort to recover appliance if the appliance operating system is not responding to the graceful shutdown method.

WARNING: Do not press the Power switch while the appliance is shutting down.

To remove power completely from the appliance, unplug the power cord or switch off the power source.

After powering off a power supply, wait at least 10 seconds before turning it back on.

After powering on a power supply, wait at least 10 seconds before turning it off.

Connect SSR1200 to External Devices

IN THIS SECTION

- Connect SSR1200 to a Management Console | 35

SSR1200 has a console port and a management port. You can configure and manage the SSR1200 appliance using the console port.

Connect SSR1200 to a Management Console

SSR1200 has a console port with an RJ-45 connector. Use the console port to connect the appliance to a management console or to a console server.

A RJ-45 to USB A serial cable is provided with the appliance.

To connect the SSR1200 appliance to a management console:

1. Connect one end of the Ethernet cable to the console port.
2. Connect the other end of the Ethernet cable to the console server (see Figure 14 on page 36) or management console (see Figure 15 on page 36).

Figure 14: Connecting the SSR1200 to a Management Console Through a Console Server

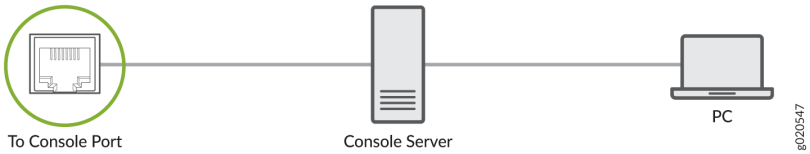

Figure 15: Connecting the SSR1200 Directly to a Management Console



Onboarding an SSR Conductor-Managed SSR1200 onto Mist Cloud

IN THIS SECTION

- Pre-Onboarding Verification | **37**
- Onboarding a Conductor-Managed SSR1200 Through the Mist Portal | **40**
- Assign SSR1200 to a Site | **42**

SSR1200 comes pre-installed with the Session Smart Router software version 5.4.4. The appliance includes a QR code that when scanned, automatically adopts your device into your Mist Organization. Scan the code using your Mist AI App or a QR Scanner and follow the on-screen instructions to adopt your device.

The Mist App can be downloaded from the following locations:

- For Apple Devices
- For Android Devices

Pre-Onboarding Verification

When onboarding a conductor-managed appliance, the process is simplified by ensuring that the IP address of the managing conductor is configured for the site that will adopt the appliance. This is typically done during Site Configuration.

To verify the conductor IP address has been assigned:

1. Select **Site Configuration** from the **Organization** menu.

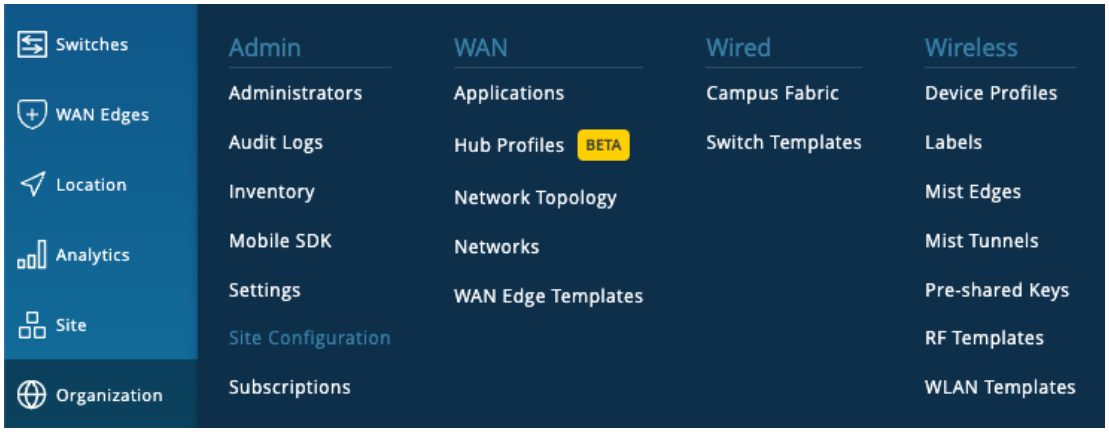

2. Select the Site the appliance will be adopted into from the list of Sites.
3. Scroll down to **Session Smart Conductor** and verify the IP address.

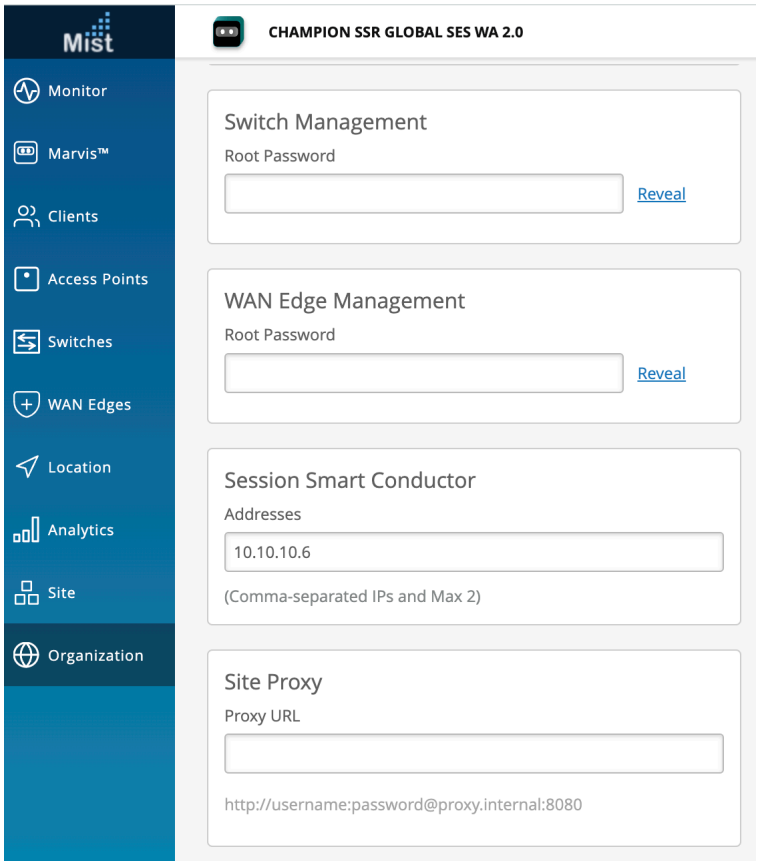

If no IP address is present, copy the IP address from the SSR GUI.

a. On the **Configuration Home** panel in the SSR GUI, click **Authority**.

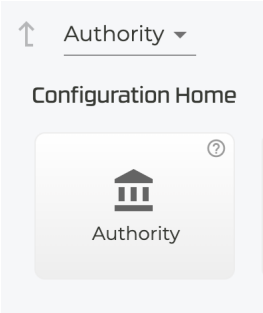

b. Under **Authority Settings**, scroll down to **Conductor Addresses** and copy the IP address of the conductor.

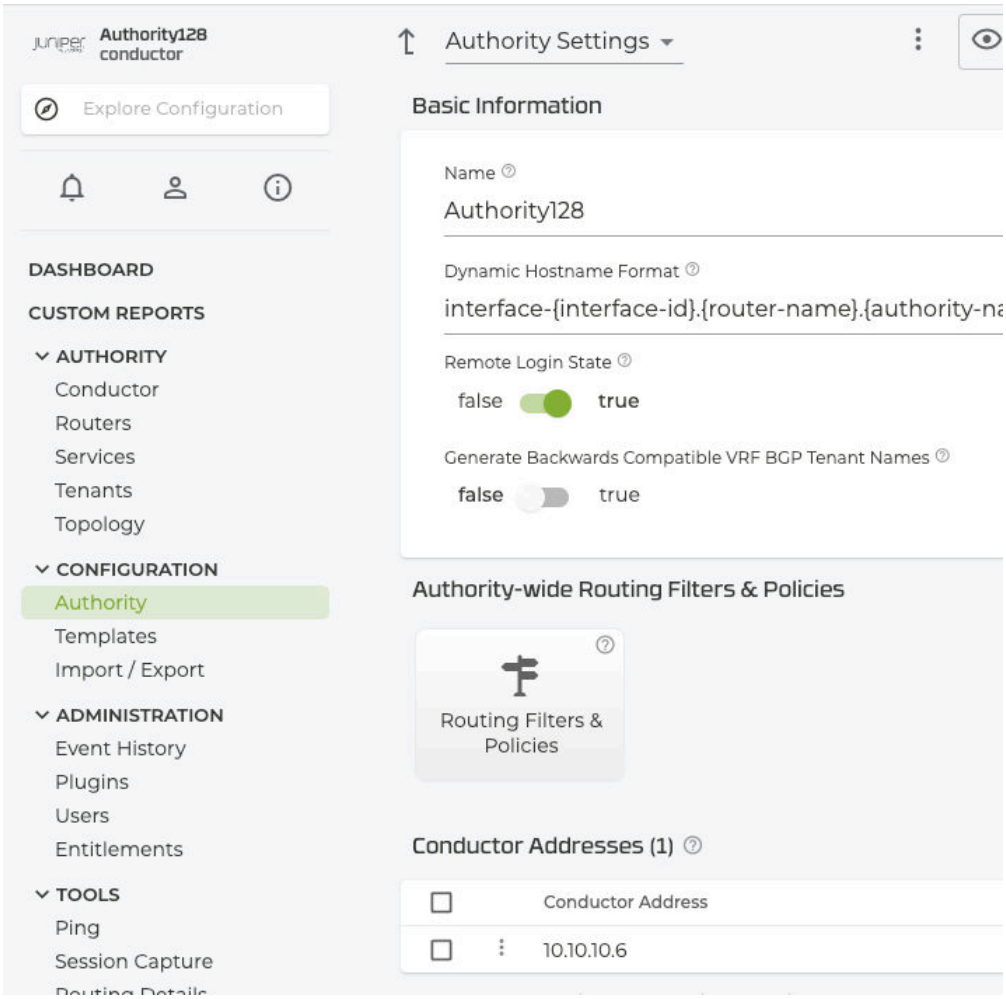

4. Return to the Mist Site Configuration, scroll down to the **Session Smart Conductor** and add the conductor IP address.

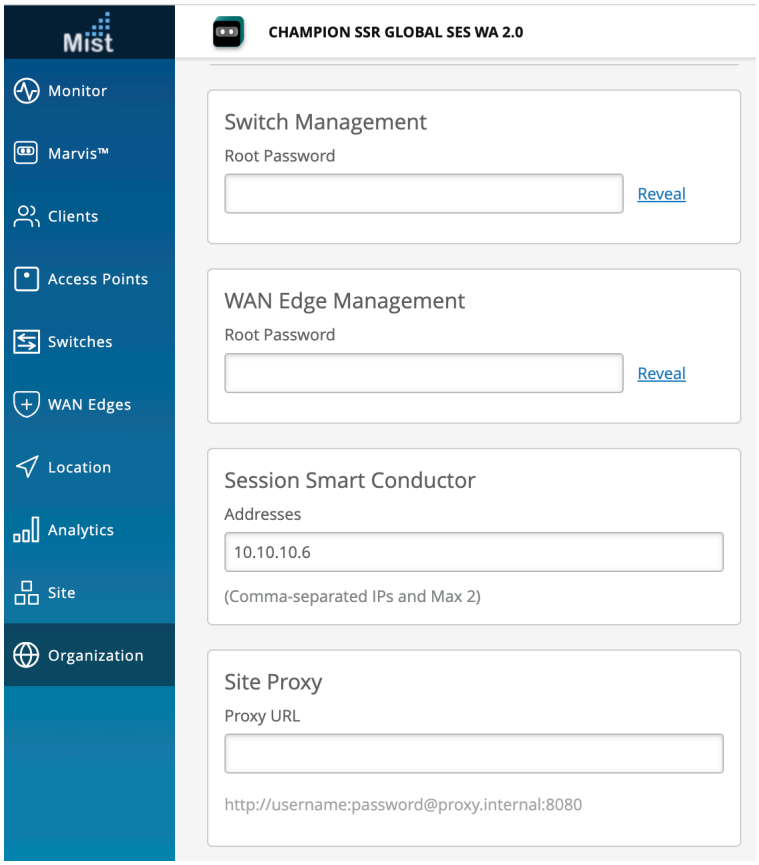

Onboarding a Conductor-Managed SSR1200 Through the Mist Portal

Use the following process to onboard a conductor-managed SSR appliance into the Mist cloud using the Mist UI and your claim code.

1. Unbox the SSR1200 appliance.
2. Connect to the WAN port. The port **0/0** on the front panel of the SSR1200 appliance is the WAN 1 network interface port.



3. Power up the SSR1200.
4. Copy the claim code from the QR sticker. The number listed on the top is the claim code. For example: In the following picture, the claim code is K6TAACRTCJWQ8GQ.



5. Login to the Mist UI on another device and navigate to your organization.
6. Go to the WAN Edges page and click **Claim WAN Edges**.

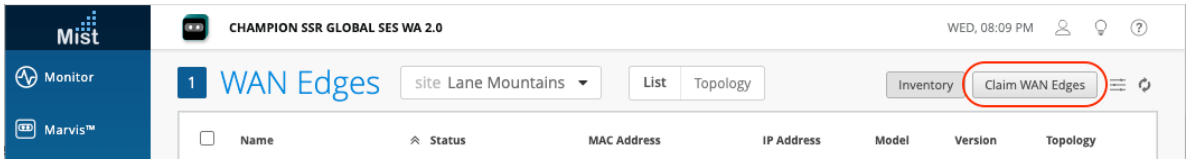

7. Enter the claim code.

> **NOTE**: Under **Manage Configuration**, do not check **Manage Configuration with Mist** if your SSR1200 is running the SSR software version 5.4.4.

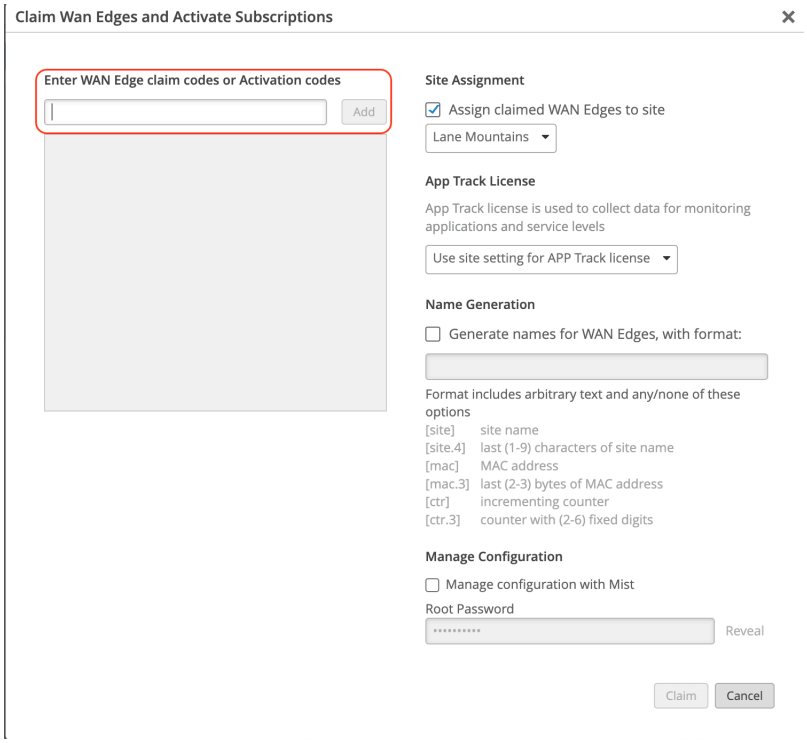

In the onboarding process, conductor-managed appliances reinitialize to use the factory-default configuration with the conductor IP address. During the initialization process, it reaches out to the conductor and pulls down the appropriate configuration.

After a few minutes, the SSR1200 appears in the Inventory with the status as **Unassigned**. Once it appears in the inventory, it must be assigned to a site. Assign the SSR1200 appliance to a site to complete the SSR onboarding. See "Assign SSR1200 to a Site" on page 42.

Assign SSR1200 to a Site

After the SSR has been onboarded to the Mist Cloud, assign it to a site to begin managing the appliance configuration and gathering data in Mist.

In the Mist Inventory page, the new appliance shows as **Unassigned**.

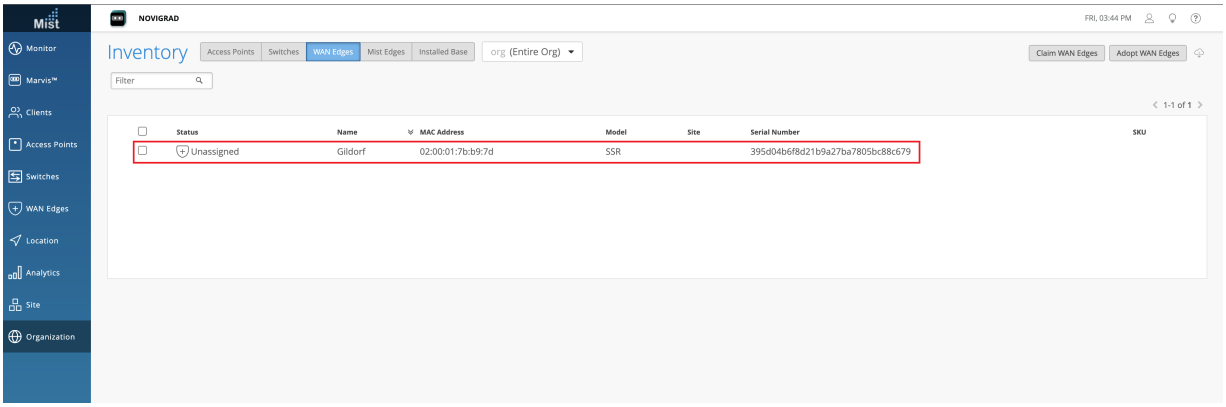

1. Select the new appliance. From the **More** drop-down list, select **Assign to Site**.

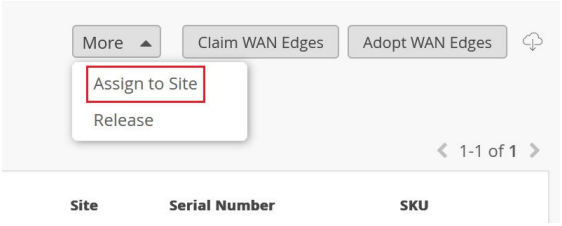

2. Select the site from the **Site** list.

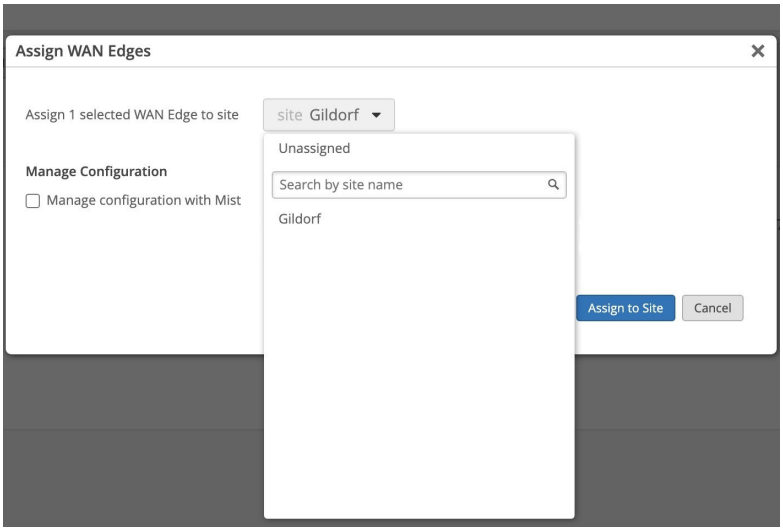

Under **Manage Configuration**, do not check **Manage Configuration with Mist** for the SSR Conductor managed appliance. This allows the device to reach out to the conductor IP address specified when the site was created to receive configuration information.

NOTE: If you are onboarding a Mist-managed appliance using Session Smart Router software version 6.0, select **Manage Configuration with Mist**. If **Manage Configuration with Mist** is not selected, the appliance will not be managed by Mist.

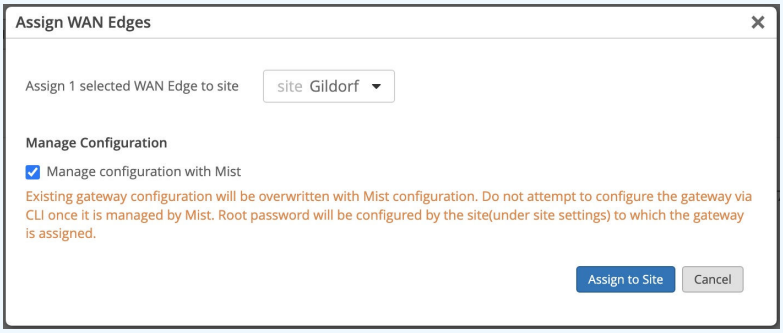

3. Click **Assign to Site**.

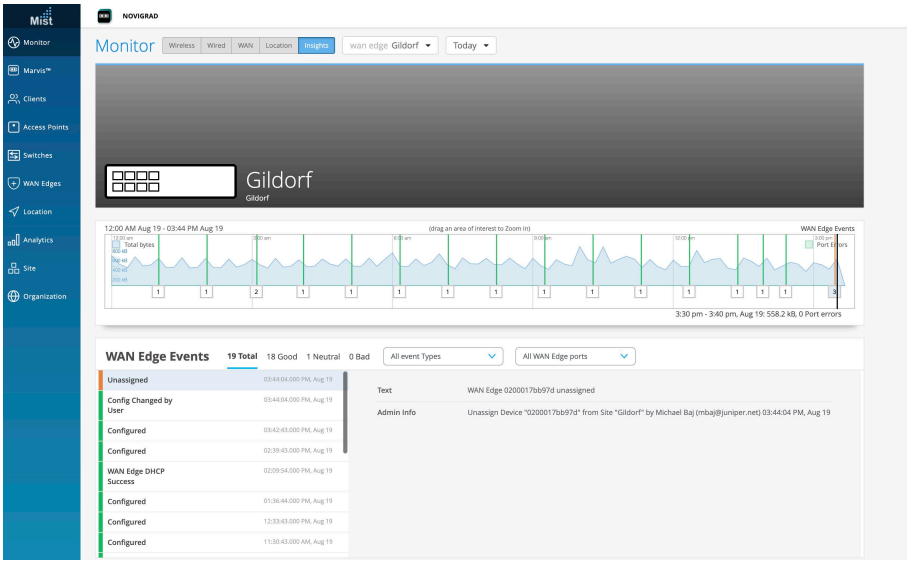

The site assignment will take a few minutes. After the site is fully onboarded, use the **Mist WAN Edge - Device View** to access the appliance, and the **Insights view** to view events and activity.

4

CHAPTER

Maintaining Components

Maintaining the SSR1200 Hardware Components | 46

SSR1200 Power Supply Maintenance | 46

Unmount the SSR1200 Chassis | 48

Maintaining the SSR1200 Hardware Components

To maintain optimum performance of the appliance, you must regularly perform the following preventive maintenance procedures:

- Inspect the installation site for moisture, loose wires or cables, and excessive dust.
- Ensure that airflow is unobstructed around the appliance and into the air intake vents.

The power supplies and transceivers are the only FRUs that can be replaced on the SSR1200. For any other issues, contact Juniper customer support. See "Contacting Customer Support and Returning the Chassis or Components" on page 51.

SSR1200 Power Supply Maintenance

SUMMARY

Maintaining an SSR1200 appliance includes replacing power supplies. Replacing includes removing a failed power supply and installing a functional power supply.

IN THIS SECTION

- Replacing an AC Power Supply on the SSR1200 | **46**

Replacing an AC Power Supply on the SSR1200

IN THIS SECTION

- Removing the AC Power Supply from an SSR1200 | **47**
- Installing the AC Power Supply in an SSR1200 | **47**

The two AC power supplies (part number: SSR1200-AC-PS) are hot-removable and hot-insertable field-replaceable units (FRUs) installed in the rear panel of the SSR1200 appliance. You can remove and replace them without powering off the SSR1200 or disrupting SSR1200 functions.

Ensure that you have the following parts and tools available:

- ESD grounding strap
- Antistatic bag or an antistatic mat
- Replacement AC power supply

Removing the AC Power Supply from an SSR1200

To remove a power supply from the appliance:

1. If the AC power source outlet has a power switch, set it to the off (0) position and pull out the power cord connected to the power source outlet.
2. Place the antistatic bag or the antistatic mat on a flat, stable surface.
3. Attach an electrostatic discharge (ESD) grounding strap to your bare wrist and connect the strap to the ESD point on the chassis.
4. Pull the power cord retainer up and remove the power cord from the power supply faceplate.
5. Slide the ejector lever towards the right (see Figure 16 on page 47) until the power supply is unseated.
6. Grasp the power supply handle and pull firmly to slide the power supply halfway out of the chassis.
7. Place one hand under the power supply to support it and slide it completely out of the chassis. Take care not to touch power supply components, pins, leads, or solder connections.

Figure 16: Removing an AC Power Supply

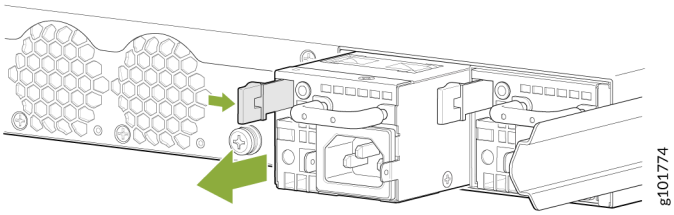

8. Place the power supply in the antistatic bag or on the antistatic mat placed on a flat, stable surface.

Installing the AC Power Supply in an SSR1200

To install an AC power supply:

1. Attach the ESD grounding strap to your bare wrist, and connect the strap to the ESD point on the chassis.

2. If the power supply slot has a cover panel on it, remove the cover panel. Save the cover panel for later use.
3. Taking care not to touch power supply pins, leads, or solder connections, remove the power supply from the bag.
4. Using both hands, place the power supply in the power supply slot on the rear panel of the SSR1200 and slide it in until it is fully seated and the ejector lever fits into place. You will hear a distinct click when the power supply is fully seated in the chassis.

Figure 17: Installing an AC Power Supply

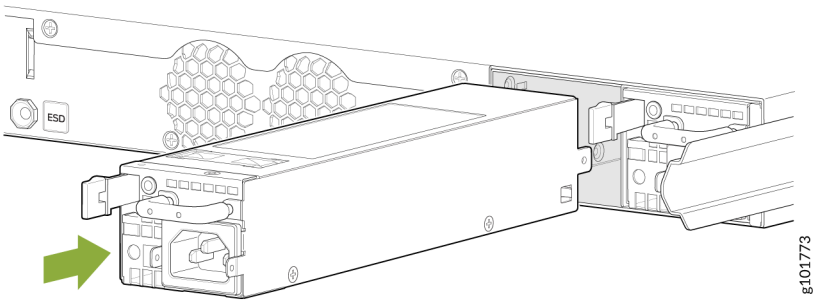

5. Connect the power cord (see "Connect SSR1200 to Power" on page 30).

Unmount the SSR1200 Chassis

IN THIS SECTION

- Remove the SSR1200 from a Rack | 48

Remove the SSR1200 from a Rack

Before removing an SSR1200 from a rack:

Here's what you'll need to remove the SSR1200 from a rack:

- Two people. One to hold the SSR1200 while the other one removes the screws.

- Screwdriver appropriate for your rack-mounting screws.

> **NOTE**: When you remove multiple devices from a rack, remove the device at the top of the rack first and proceed to remove the rest of the devices from top to bottom.

- Read "General Safety Guidelines and Warnings" on page 57.
- Power off the SSR1200 (see "Power Off the SSR1200" on page 34).
- Disconnect the power cords.
- Ensure that you have disconnected any cables or wires attached to the SSR1200.

To remove an SSR1200 from a rack:

1. Have one person support the weight of the appliance while another person uses the screwdriver to remove the screws that attach the front mounting brackets to the rack.
2. Remove the SSR1200 from the rack.
3. Use the screwdriver to remove the screws that attach the rear mounting blades attached to the rear of the rack.
4. Place the removed screws and rear mounting blades in a labeled bag. You will need them when you reinstall the chassis.

5
CHAPTER

Contacting Customer Support and Returning the Chassis or Components

Contacting Customer Support and Returning the Chassis or Components

SUMMARY

If you need to return a hardware component to Juniper Networks, you need a Return Material Authorization (RMA) number and the equipment serial number. The Juniper Networks Technical Assistance Center (JTAC) can generate an RMA number. You may also need to locate chassis or component details using the CLI or by referring to equipment labels. You then pack and ship the return.

IN THIS SECTION

- How to Return a Hardware Component to Juniper Networks, Inc. | **51**
- Locate the Chassis Serial Number ID Label | **52**
- Contact Customer Support to Obtain Return Material Authorization | **53**
- Guidelines for Packing and Shipping Hardware Components | **54**

How to Return a Hardware Component to Juniper Networks, Inc.

If a hardware component fails, please contact Juniper Networks, Inc. to obtain a Return Material Authorization (RMA) number. This number is used to track the returned material at the factory and to return repaired or new components to you, as needed.

NOTE: Do not return any component to Juniper Networks, Inc. unless you have first obtained an RMA number. Juniper Networks, Inc. reserves the right to refuse shipments that do not have an RMA number. Refused shipments are returned to you by collect freight.

For more information about return and repair policies, see the customer support webpage at https://support.juniper.net/support/.

For product problems or technical support issues, contact the Juniper Networks Technical Assistance Center (JTAC) in one of the following ways:

- On the Web, using the Service Request Manager link at:

  https://support.juniper.net/support/

- By telephone:

- From the U.S. and Canada: 1-888-314-JTAC (5822)
- From all other locations: 1-408-745-9500

> **NOTE**: If contacting JTAC by telephone, enter your 12-digit service request number followed by the pound (#) key if this is an existing case, or press the star (*) key to be routed to the next available support engineer to report a new incident.

To return a defective hardware component:

1. Determine the part number and serial number of the defective component.
2. Obtain an RMA number from the JTAC. You can send e-mail or contact JTAC by telephone, as described above.
3. Provide the following information in your e-mail message or during the telephone call:
   - Part number and serial number of component
   - Your name, organization name, telephone number, and fax number
   - Description of the failure
4. The support representative validates your request and issues an RMA number for return of the component.
5. Pack the component for shipment. See "Guidelines for Packing and Shipping Hardware Components" on page 54.

Locate the Chassis Serial Number ID Label

On the SSR1200 appliance, the chassis serial number ID label is located on the top left corner of the chassis, as shown in Figure 18 on page 53.

Figure 18: Location of the Serial Number Label

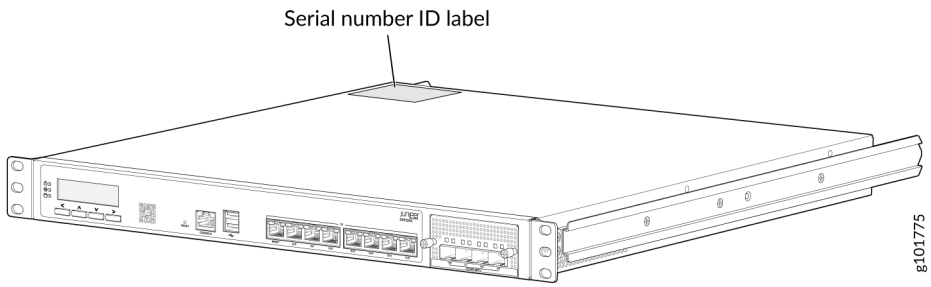

Contact Customer Support to Obtain Return Material Authorization

If you are returning a device or hardware component to Juniper Networks for repair or replacement, obtain a Return Material Authorization (RMA) number from the Juniper Networks Technical Assistance Center (JTAC).

After locating the serial number of the device or component you want to return, open a service request with JTAC on the Web or by telephone.

Before you request an RMA from JTAC, be prepared to provide the following information:

- Your existing service request number, if you have one
- Serial number of the component
- Your name, organization name, telephone number, fax number, and shipping address
- Details of the failure or problem
- Type of activity being performed on the device when the problem occurred
- Configuration data displayed by one or more `show` commands

You can contact JTAC 24 hours a day, seven days a week on the Web or by telephone:

- Service Request Manager: https://support.juniper.net/support/
- Telephone: +1-888-314-JTAC (+1-888-314-5822), toll-free in the USA, Canada, and Mexico

NOTE: For international or direct-dial options in countries without toll-free numbers, see https://support.juniper.net/support/.

If you are contacting JTAC by telephone, enter your 12-digit service request number followed by the pound (#) key for an existing case, or press the star (*) key to be routed to the next available support engineer for a new incident.

The support representative validates your request and issues an RMA number for return of the component.

Guidelines for Packing and Shipping Hardware Components

To pack and ship individual components:

1. When you return the chassis or components, make sure that they are adequately protected with packing materials and packed so that the pieces are prevented from moving around inside the carton.
2. Use the original shipping materials, if they are available.
3. Place individual components in antistatic bags.
4. Write the Return Materials Authorization (RMA) number on the exterior of the box to ensure proper tracking.
5. Ship the package.

NOTE: Remove the power supply units and the two mounting brackets before packing the appliance.

CAUTION: Do not stack any of the hardware components.

CHAPTER 6

Safety and Compliance Information

Definitions of Safety Warning Levels | 56

General Safety Guidelines and Warnings | 57

Restricted Access Warning | 59

Qualified Personnel Warning | 60

Prevention of Electrostatic Discharge Damage | 61

Fire Safety Requirements | 62

Laser and LED Safety Guidelines and Warnings | 64

Chassis and Component Lifting Guidelines | 66

Radiation from Open Port Apertures Warning | 67

Maintenance and Operational Safety Guidelines and Warnings | 68

Action to Take After an Electrical Accident | 74

General Electrical Safety Guidelines and Warnings | 74

SSR1200 Agency Approvals | 76

FCC Declarations | 77

Lithium Battery Declaration | 78

Definitions of Safety Warning Levels

The documentation uses the following levels of safety warnings (there are two *Warning* formats):

NOTE: You might find this information helpful in a particular situation, or you might overlook this important information if it was not highlighted in a Note.



CAUTION: You need to observe the specified guidelines to prevent minor injury or discomfort to you or severe damage to the device.

Attention Veillez à respecter les consignes indiquées pour éviter toute incommodité ou blessure légère, voire des dégâts graves pour l'appareil.



LASER WARNING: This symbol alerts you to the risk of personal injury from a laser.

Avertissement Ce symbole signale un risque de blessure provoquée par rayon laser.



WARNING: This symbol means danger. You are in a situation that could cause bodily injury. Before you work on any equipment, be aware of the hazards involved with electrical circuitry, and familiarize yourself with standard practices for preventing accidents.

Waarschuwing Dit waarschuwingssymbool betekent gevaar. U verkeert in een situatie die lichamelijk letsel kan veroorzaken. Voordat u aan enige apparatuur gaat werken, dient u zich bewust te zijn van de bij elektrische schakelingen betrokken risico's en dient u op de hoogte te zijn van standaard maatregelen om ongelukken te voorkomen.

Varoitus Tämä varoitusmerkki merkitsee vaaraa. Olet tilanteessa, joka voi johtaa ruumiinvammaan. Ennen kuin työskentelet minkään laitteiston parissa, ota selvää sähkökytkentöihin liittyvistä vaaroista ja tavanomaisista onnettomuuksien ehkäisykeinoista.

Avertissement Ce symbole d'avertissement indique un danger. Vous vous trouvez dans une situation pouvant causer des blessures ou des dommages corporels. Avant de travailler sur un équipement, soyez conscient des dangers posés par les circuits électriques et familiarisez-vous avec les procédures couramment utilisées pour éviter les accidents.

Warnung Dieses Warnsymbol bedeutet Gefahr. Sie befinden sich in einer Situation, die zu einer Körperverletzung führen könnte. Bevor Sie mit der Arbeit an irgendeinem Gerät beginnen, seien Sie sich der mit elektrischen Stromkreisen verbundenen Gefahren und der Standardpraktiken zur Vermeidung von Unfällen bewußt.

Avvertenza Questo simbolo di avvertenza indica un pericolo. La situazione potrebbe causare infortuni alle persone. Prima di lavorare su qualsiasi apparecchiatura, occorre conoscere i pericoli relativi ai circuiti elettrici ed essere al corrente delle pratiche standard per la prevenzione di incidenti.

Advarsel Dette varselsymbolet betyr fare. Du befinner deg i en situasjon som kan føre til personskade. Før du utfører arbeid på utstyr, må du vare oppmerksom på de faremomentene som elektriske kretser innebærer, samt gjøre deg kjent med vanlig praksis når det gjelder å unngå ulykker.

Aviso Este símbolo de aviso indica perigo. Encontra-se numa situação que lhe poderá causar danos físicos. Antes de começar a trabalhar com qualquer equipamento, familiarize-se com os perigos relacionados com circuitos eléctricos, e com quaisquer práticas comuns que possam prevenir possíveis acidentes.

¡Atención! Este símbolo de aviso significa peligro. Existe riesgo para su integridad física. Antes de manipular cualquier equipo, considerar los riesgos que entraña la corriente eléctrica y familiarizarse con los procedimientos estándar de prevención de accidentes.

Varning! Denna varningssymbol signalerar fara. Du befinner dig i en situation som kan leda till personskada. Innan du utför arbete på någon utrustning måste du vara medveten om farorna med elkretsar och känna till vanligt förfarande för att förebygga skador.

General Safety Guidelines and Warnings

The following guidelines help ensure your safety and protect the device from damage. The list of guidelines might not address all potentially hazardous situations in your working environment, so be alert and exercise good judgment at all times.

- Perform only the procedures explicitly described in the hardware documentation for this device. Make sure that only authorized service personnel perform other system services.
- Keep the area around the device clear and free from dust before, during, and after installation.
- Keep tools away from areas where people could trip over them while walking.

- Do not wear loose clothing or jewelry, such as rings, bracelets, or chains, which could become caught in the device.
- Wear safety glasses if you are working under any conditions that could be hazardous to your eyes.
- Do not perform any actions that create a potential hazard to people or make the equipment unsafe.
- Never attempt to lift an object that is too heavy for one person to handle.
- Never install or manipulate wiring during electrical storms.
- Never install electrical jacks in wet locations unless the jacks are specifically designed for wet environments.
- Operate the device only when it is properly grounded.
- Follow the instructions in this guide to properly ground the device to earth.
- Replace fuses only with fuses of the same type and rating.
- Do not open or remove chassis covers or sheet-metal parts unless instructions are provided in the hardware documentation for this device. Such an action could cause severe electrical shock.
- Do not push or force any objects through any opening in the chassis frame. Such an action could result in electrical shock or fire.
- Avoid spilling liquid onto the chassis or onto any device component. Such an action could cause electrical shock or damage the device.
- Avoid touching uninsulated electrical wires or terminals that have not been disconnected from their power source. Such an action could cause electrical shock.
- Some parts of the chassis, including AC and DC power supply surfaces, power supply unit handles, SFB card handles, and fan tray handles might become hot. The following label provides the warning for hot surfaces on the chassis:



- Always ensure that all modules, power supplies, and cover panels are fully inserted and that the installation screws are fully tightened.

Restricted Access Warning



WARNING: This unit is intended for installation in restricted access areas. A restricted access area is an area to which access can be gained only by service personnel through the use of a special tool, lock and key, or other means of security, and which is controlled by the authority responsible for the location.

Waarschuwing Dit toestel is bedoeld voor installatie op plaatsen met beperkte toegang. Een plaats met beperkte toegang is een plaats waar toegang slechts door servicepersoneel verkregen kan worden door middel van een speciaal instrument, een slot en sleutel, of een ander veiligheidsmiddel, en welke beheerd wordt door de overheidsinstantie die verantwoordelijk is voor de locatie.

Varoitus Tämä laite on tarkoitettu asennettavaksi paikkaan, johon pääsy on rajoitettua. Paikka, johon pääsy on rajoitettua, tarkoittaa paikkaa, johon vain huoltohenkilöstö pääsee jonkin erikoistyökalun, lukkoon sopivan avaimen tai jonkin muun turvalaitteen avulla ja joka on paikasta vastuussa olevien toimivaltaisten henkilöiden valvoma.

Avertissement Cet appareil est à installer dans des zones d'accès réservé. Ces dernières sont des zones auxquelles seul le personnel de service peut accéder en utilisant un outil spécial, un mécanisme de verrouillage et une clé, ou tout autre moyen de sécurité. L'accès aux zones de sécurité est sous le contrôle de l'autorité responsable de l'emplacement.

Warnung Diese Einheit ist zur Installation in Bereichen mit beschränktem Zutritt vorgesehen. Ein Bereich mit beschränktem Zutritt ist ein Bereich, zu dem nur Wartungspersonal mit einem Spezialwerkzeugs, Schloß und Schlüssel oder anderer Sicherheitsvorkehrungen Zugang hat, und der von dem für die Anlage zuständigen Gremium kontrolliert wird.

Avvertenza Questa unità deve essere installata in un'area ad accesso limitato. Un'area ad accesso limitato è un'area accessibile solo a personale di assistenza tramite un'attrezzo speciale, lucchetto, o altri dispositivi di sicurezza, ed è controllata dall'autorità responsabile della zona.

Advarsel Denne enheten er laget for installasjon i områder med begrenset adgang. Et område med begrenset adgang gir kun adgang til servicepersonale som bruker et spesielt verktøy, lås og nøkkel, eller en annen sikkerhetsanordning, og det kontrolleres av den autoriteten som er ansvarlig for området.

Aviso Esta unidade foi concebida para instalação em áreas de acesso restrito. Uma área de acesso restrito é uma área à qual apenas tem acesso o pessoal de serviço autorizado,

que possua uma ferramenta, chave e fechadura especial, ou qualquer outra forma de segurança. Esta área é controlada pela autoridade responsável pelo local.

¡Atención! Esta unidad ha sido diseñada para instalarse en áreas de acceso restringido. Área de acceso restringido significa un área a la que solamente tiene acceso el personal de servicio mediante la utilización de una herramienta especial, cerradura con llave, o algún otro medio de seguridad, y que está bajo el control de la autoridad responsable del local.

Varning! Denna enhet är avsedd för installation i områden med begränsat tillträde. Ett område med begränsat tillträde får endast tillträdas av servicepersonal med ett speciellt verktyg, lås och nyckel, eller annan säkerhetsanordning, och kontrolleras av den auktoritet som ansvarar för området.

Qualified Personnel Warning



WARNING: Only trained and qualified personnel should install or replace the device.
Waarschuwing Installatie en reparaties mogen uitsluitend door getraind en bevoegd personeel uitgevoerd worden.

Varoitus Ainoastaan koulutettu ja pätevä henkilökunta saa asentaa tai vaihtaa tämän laitteen.

Avertissement Tout installation ou remplacement de l'appareil doit être réalisé par du personnel qualifié et compétent.

Warnung Gerät nur von geschultem, qualifiziertem Personal installieren oder auswechseln lassen.

Avvertenza Solo personale addestrato e qualificato deve essere autorizzato ad installare o sostituire questo apparecchio.

Advarsel Kun kvalifisert personell med riktig opplæring bør montere eller bytte ut dette utstyret.

Aviso Este equipamento deverá ser instalado ou substituído apenas por pessoal devidamente treinado e qualificado.

¡Atención! Estos equipos deben ser instalados y reemplazados exclusivamente por personal técnico adecuadamente preparado y capacitado.

Varning! Denna utrustning ska endast installeras och bytas ut av utbildad och kvalificerad personal.

Prevention of Electrostatic Discharge Damage

Device components that are shipped in antistatic bags are sensitive to damage from static electricity. Some components can be impaired by voltages as low as 30 V. You can easily generate potentially damaging static voltages whenever you handle plastic or foam packing material or if you move components across plastic or carpets. Observe the following guidelines to minimize the potential for electrostatic discharge (ESD) damage, which can cause intermittent or complete component failures:

- Always use an ESD wrist strap when you are handling components that are subject to ESD damage, and make sure that it is in direct contact with your skin.

  If a grounding strap is not available, hold the component in its antistatic bag (see Figure 19 on page 62) in one hand and touch the exposed, bare metal of the device with the other hand immediately before inserting the component into the device.

  WARNING: For safety, periodically check the resistance value of the ESD grounding strap. The measurement must be in the range 1 through 10 Mohms.
  Avertissement Par mesure de sécurité, vérifiez régulièrement la résistance du bracelet antistatique. Cette valeur doit être comprise entre 1 et 10 mégohms (Mohms).

- When handling any component that is subject to ESD damage and that is removed from the device, make sure the equipment end of your ESD wrist strap is attached to the ESD point on the chassis.

  If no grounding strap is available, touch the exposed, bare metal of the device to ground yourself before handling the component.

- Avoid contact between the component that is subject to ESD damage and your clothing. ESD voltages emitted from clothing can damage components.

- When removing or installing a component that is subject to ESD damage, always place it component-side up on an antistatic surface, in an antistatic card rack, or in an antistatic bag (see Figure 19 on page 62). If you are returning a component, place it in an antistatic bag before packing it.

Figure 19: Placing a Component into an Antistatic Bag

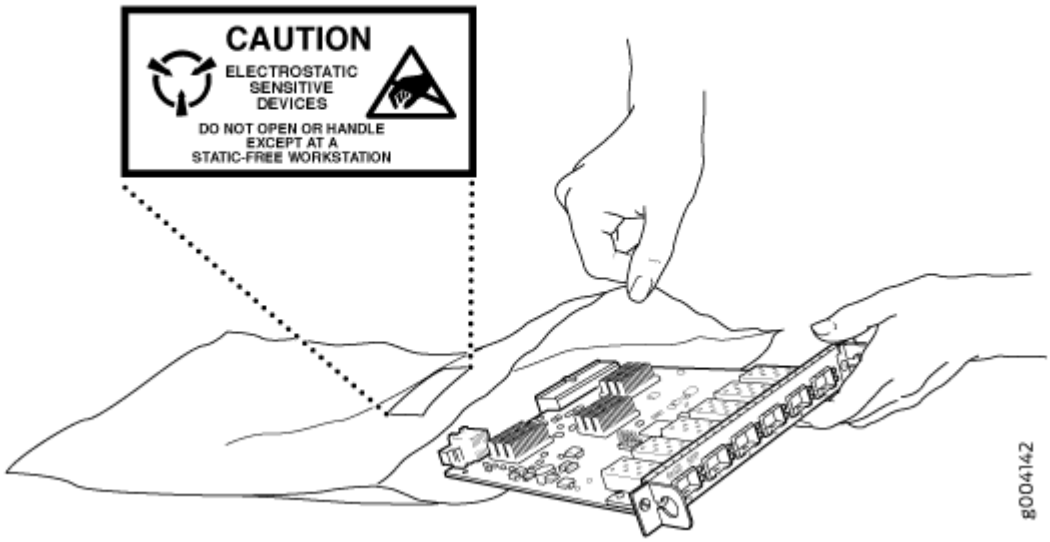

CAUTION: ANSI/TIA/EIA-568 cables such as Category 5e and Category 6 can get electrostatically charged. To dissipate this charge, always ground the cables to a suitable and safe earth ground before connecting them to the system.

Attention Les câbles ANSI/TIA/EIA-568, par exemple Cat 5e et Cat 6, peuvent emmagasiner des charges électrostatiques. Pour évacuer ces charges, reliez toujours les câbles à une prise de terre adaptée avant de les raccorder au système.

Fire Safety Requirements

IN THIS SECTION

- Fire Suppression | 63
- Fire Suppression Equipment | 63

In the event of a fire emergency, the safety of people is the primary concern. You should establish procedures for protecting people in the event of a fire emergency, provide safety training, and properly provision fire-control equipment and fire extinguishers.

In addition, you should establish procedures to protect your equipment in the event of a fire emergency. Juniper Networks products should be installed in an environment suitable for electronic equipment. We recommend that fire suppression equipment be available in the event of a fire in the vicinity of the equipment and that all local fire, safety, and electrical codes and ordinances be observed when you install and operate your equipment.

Fire Suppression

In the event of an electrical hazard or an electrical fire, you should first turn power off to the equipment at the source. Then use a Type C fire extinguisher, which uses noncorrosive fire retardants, to extinguish the fire.

Fire Suppression Equipment

Type C fire extinguishers, which use noncorrosive fire retardants such as carbon dioxide and Halotron™, are most effective for suppressing electrical fires. Type C fire extinguishers displace oxygen from the point of combustion to eliminate the fire. For extinguishing fire on or around equipment that draws air from the environment for cooling, you should use this type of inert oxygen displacement extinguisher instead of an extinguisher that leaves residues on equipment.

Do not use multipurpose Type ABC chemical fire extinguishers (dry chemical fire extinguishers). The primary ingredient in these fire extinguishers is monoammonium phosphate, which is very sticky and difficult to clean. In addition, in the presence of minute amounts of moisture, monoammonium phosphate can become highly corrosive and corrodes most metals.

Any equipment in a room in which a chemical fire extinguisher has been discharged is subject to premature failure and unreliable operation. The equipment is considered to be irreparably damaged.

NOTE: To keep warranties effective, do not use a dry chemical fire extinguisher to control a fire at or near a Juniper Networks device. If a dry chemical fire extinguisher is used, the unit is no longer eligible for coverage under a service agreement.

We recommend that you dispose of any irreparably damaged equipment in an environmentally responsible manner.

Laser and LED Safety Guidelines and Warnings

IN THIS SECTION

- General Laser Safety Guidelines | 64
- Class 1 Laser Product Warning | 65
- Class 1 LED Product Warning | 65
- Laser Beam Warning | 66

Juniper Networks devices are equipped with laser transmitters, which are considered a Class 1 Laser Product by the U.S. Food and Drug Administration and are evaluated as a Class 1 Laser Product per IEC/EN 60825-1 requirements.

Observe the following guidelines and warnings:

General Laser Safety Guidelines

When working around ports that support optical transceivers, observe the following safety guidelines to prevent eye injury:

- Do not look into unterminated ports or at fibers that connect to unknown sources.
- Do not examine unterminated optical ports with optical instruments.
- Avoid direct exposure to the beam.



LASER WARNING: Unterminated optical connectors can emit invisible laser radiation. The lens in the human eye focuses all the laser power on the retina, so focusing the eye directly on a laser source—even a low-power laser—could permanently damage the eye.

Avertissement Les connecteurs à fibre optique sans terminaison peuvent émettre un rayonnement laser invisible. Le cristallin de l'œil humain faisant converger toute la puissance du laser sur la rétine, toute focalisation directe de l'œil sur une source laser, —même de faible puissance—, peut entraîner des lésions oculaires irréversibles.

Class 1 Laser Product Warning



LASER WARNING: Class 1 laser product.
Waarschuwing Klasse-1 laser produkt.

Varoitus Luokan 1 lasertuote.

Avertissement Produit laser de classe I.

Warnung Laserprodukt der Klasse 1.

Avvertenza Prodotto laser di Classe 1.

Advarsel Laserprodukt av klasse 1.

Aviso Produto laser de classe 1.

¡Atención! Producto láser Clase I.

Varning! Laserprodukt av klass 1.

Class 1 LED Product Warning



LASER WARNING: Class 1 LED product.
Waarschuwing Klasse 1 LED-product.

Varoitus Luokan 1 valodiodituote.

Avertissement Alarme de produit LED Class I.

Warnung Class 1 LED-Produktwarnung.

Avvertenza Avvertenza prodotto LED di Classe 1.

Advarsel LED-produkt i klasse 1.

Aviso Produto de classe 1 com LED.

¡Atención! Aviso sobre producto LED de Clase 1.

Varning! Lysdiodprodukt av klass 1.

Laser Beam Warning



LASER WARNING: Do not stare into the laser beam or view it directly with optical instruments.
Waarschuwing Niet in de straal staren of hem rechtstreeks bekijken met optische instrumenten.

Varoitus Älä katso säteeseen äläkä tarkastele sitä suoraan optisen laitteen avulla.

Avertissement Ne pas fixer le faisceau des yeux, ni l'observer directement à l'aide d'instruments optiques.

Warnung Nicht direkt in den Strahl blicken und ihn nicht direkt mit optischen Geräten prüfen.

Avvertenza Non fissare il raggio con gli occhi né usare strumenti ottici per osservarlo direttamente.

Advarsel Stirr eller se ikke direkte p strlen med optiske instrumenter.

Aviso Não olhe fixamente para o raio, nem olhe para ele directamente com instrumentos ópticos.

¡Atención! No mirar fijamente el haz ni observarlo directamente con instrumentos ópticos.

Varning! Rikta inte blicken in mot strålen och titta inte direkt på den genom optiska instrument.

Chassis and Component Lifting Guidelines

- Before moving the device to a site, ensure that the site meets the power, environmental, and clearance requirements.
- Before lifting or moving the device, disconnect all external cables and wires.
- As when lifting any heavy object, ensure that your legs bear most of the weight rather than your back. Keep your knees bent and your back relatively straight. Do not twist your body as you lift. Balance the load evenly and be sure that your footing is firm.
- Use the following lifting guidelines to lift devices and components:

- Up to 39.7 lb (18 kg): One person.
- From 39.7 lb (18 kg) to 70.5 lb (32 kg): Two or more people.
- From 70.5 lb (32 kg) to 121.2 lb (55 kg): Three or more people.
- Above 121.2 lb (55 kg): Use material handling systems (such as levers, slings, lifts, and so on). When this is not practical, engage specially trained persons or systems (such as riggers or movers).

Radiation from Open Port Apertures Warning



LASER WARNING: Because invisible radiation might be emitted from the aperture of the port when no fiber cable is connected, avoid exposure to radiation and do not stare into open apertures.

Waarschuwing Aangezien onzichtbare straling vanuit de opening van de poort kan komen als er geen fiberkabel aangesloten is, dient blootstelling aan straling en het kijken in open openingen vermeden te worden.

Varoitus Koska portin aukosta voi emittoitua näkymätöntä säteilyä, kun kuitukaapelia ei ole kytkettynä, vältä säteilylle altistumista äläkä katso avoimiin aukkoihin.

Avertissement Des radiations invisibles à l'il nu pouvant traverser l'ouverture du port lorsqu'aucun câble en fibre optique n'y est connecté, il est recommandé de ne pas regarder fixement l'intérieur de ces ouvertures.

Warnung Aus der Port-Öffnung können unsichtbare Strahlen emittieren, wenn kein Glasfaserkabel angeschlossen ist. Vermeiden Sie es, sich den Strahlungen auszusetzen, und starren Sie nicht in die Öffnungen!

Avvertenza Quando i cavi in fibra non sono inseriti, radiazioni invisibili possono essere emesse attraverso l'apertura della porta. Evitate di esporvi alle radiazioni e non guardate direttamente nelle aperture.

Advarsel Unngå utsettelse for stråling, og stirr ikke inn i åpninger som er åpne, fordi usynlig stråling kan emiteres fra portens åpning når det ikke er tilkoblet en fiberkabel.

Aviso Dada a possibilidade de emissão de radiação invisível através do orifício da via de acesso, quando esta não tiver nenhum cabo de fibra conectado, deverá evitar an EXposição à radiação e não deverá olhar fixamente para orifícios que se encontrarem a descoberto.

¡Atención! Debido a que la apertura del puerto puede emitir radiación invisible cuando no existe un cable de fibra conectado, evite mirar directamente a las aperturas para no exponerse a la radiación.

Varning! Osynlig strålning kan avges från en portöppning utan ansluten fiberkabel och du bör därför undvika att bli utsatt för strålning genom att inte stirra in i oskyddade öppningar.

Maintenance and Operational Safety Guidelines and Warnings

IN THIS SECTION

- Battery Handling Warning | **68**
- Jewelry Removal Warning | **69**
- Lightning Activity Warning | **71**
- Operating Temperature Warning | **72**
- Product Disposal Warning | **73**

While performing the maintenance activities for devices, observe the following guidelines and warnings:

Battery Handling Warning



WARNING: Replacing a battery incorrectly might result in an explosion. Replace a battery only with the same or equivalent type recommended by the manufacturer. Dispose of used batteries according to the manufacturer's instructions.

Waarschuwing Er is ontploffingsgevaar als de batterij verkeerd vervangen wordt. Vervang de batterij slechts met hetzelfde of een equivalent type dat door de fabrikant

aanbevolen is. Gebruikte batterijen dienen overeenkomstig fabrieksvoorschriften weggeworpen te worden.

Varoitus Räjähdyksen vaara, jos akku on vaihdettu väärään akkuun. Käytä vaihtamiseen ainoastaan saman- tai vastaavantyyppistä akkua, joka on valmistajan suosittelema. Hävitä käytetyt akut valmistajan ohjeiden mukaan.

Avertissement Danger d'explosion si la pile n'est pas remplacée correctement. Ne la remplacer que par une pile de type semblable ou équivalent, recommandée par le fabricant. Jeter les piles usagées conformément aux instructions du fabricant.

Warnung Bei Einsetzen einer falschen Batterie besteht Explosionsgefahr. Ersetzen Sie die Batterie nur durch den gleichen oder vom Hersteller empfohlenen Batterietyp. Entsorgen Sie die benutzten Batterien nach den Anweisungen des Herstellers.

Advarsel Det kan være fare for eksplosjon hvis batteriet skiftes på feil måte. Skift kun med samme eller tilsvarende type som er anbefalt av produsenten. Kasser brukte batterier i henhold til produsentens instruksjoner.

Avvertenza Pericolo di esplosione se la batteria non è installata correttamente. Sostituire solo con una di tipo uguale o equivalente, consigliata dal produttore. Eliminare le batterie usate secondo le istruzioni del produttore.

Aviso Existe perigo de explosão se a bateria for substituída incorrectamente. Substitua a bateria por uma bateria igual ou de um tipo equivalente recomendado pelo fabricante. Destrua as baterias usadas conforme as instruções do fabricante.

¡Atención! Existe peligro de explosión si la batería se reemplaza de manera incorrecta. Reemplazar la baterían EXclusivamente con el mismo tipo o el equivalente recomendado por el fabricante. Desechar las baterías gastadas según las instrucciones del fabricante.

Varning! Explosionsfara vid felaktigt batteribyte. Ersätt endast batteriet med samma batterityp som rekommenderas av tillverkaren eller motsvarande. Följ tillverkarens anvisningar vid kassering av använda batterier.

Jewelry Removal Warning



WARNING: Before working on equipment that is connected to power lines, remove jewelry, including rings, necklaces, and watches. Metal objects heat up when connected to power and ground and can cause serious burns or can be welded to the terminals.

Waarschuwing Alvorens aan apparatuur te werken die met elektrische leidingen is verbonden, sieraden (inclusief ringen, kettingen en horloges) verwijderen. Metalen voorwerpen worden warm wanneer ze met stroom en aarde zijn verbonden, en kunnen ernstige brandwonden veroorzaken of het metalen voorwerp aan de aansluitklemmen lassen.

Varoitus Ennen kuin työskentelet voimavirtajohtoihin kytkettyjen laitteiden parissa, ota pois kaikki korut (sormukset, kaulakorut ja kellot mukaan lukien). Metalliesineet kuumenevat, kun ne ovat yhteydessä sähkövirran ja maan kanssa, ja ne voivat aiheuttaa vakavia palovammoja tai hitsata metalliesineet kiinni liitäntänapoihin.

Avertissement Avant d'accéder à cet équipement connecté aux lignes électriques, ôter tout bijou (anneaux, colliers et montres compris). Lorsqu'ils sont branchés à l'alimentation et reliés à la terre, les objets métalliques chauffent, ce qui peut provoquer des blessures graves ou souder l'objet métallique aux bornes.

Warnung Vor der Arbeit an Geräten, die an das Netz angeschlossen sind, jeglichen Schmuck (einschließlich Ringe, Ketten und Uhren) abnehmen. Metallgegenstände erhitzen sich, wenn sie an das Netz und die Erde angeschlossen werden, und können schwere Verbrennungen verursachen oder an die Anschlußklemmen angeschweißt werden.

Avvertenza Prima di intervenire su apparecchiature collegate alle linee di alimentazione, togliersi qualsiasi monile (inclusi anelli, collane, braccialetti ed orologi). Gli oggetti metallici si riscaldano quando sono collegati tra punti di alimentazione e massa: possono causare ustioni gravi oppure il metallo può saldarsi ai terminali.

Advarsel Fjern alle smykker (inkludert ringer, halskjeder og klokker) før du skal arbeide på utstyr som er koblet til kraftledninger. Metallgjenstander som er koblet til kraftledninger og jord blir svært varme og kan forårsake alvorlige brannskader eller smelte fast til polene.

Aviso Antes de trabalhar em equipamento que esteja ligado a linhas de corrente, retire todas as jóias que estiver a usar (incluindo anéis, fios e relógios). Os objectos metálicos aquecerão em contacto com a corrente e em contacto com a ligação à terra, podendo causar queimaduras graves ou ficarem soldados aos terminais.

¡Atención! Antes de operar sobre equipos conectados a líneas de alimentación, quitarse las joyas (incluidos anillos, collares y relojes). Los objetos de metal se calientan cuando se conectan a la alimentación y a tierra, lo que puede ocasionar quemaduras graves o que los objetos metálicos queden soldados a los bornes.

Varning! Tag av alla smycken (inklusive ringar, halsband och armbandsur) innan du arbetar på utrustning som är kopplad till kraftledningar. Metallobjekt hettas upp när de kopplas ihop med ström och jord och kan förorsaka allvarliga brännskador; metallobjekt kan också sammansvetsas med kontakterna.

Lightning Activity Warning



WARNING: Do not work on the system or connect or disconnect cables during periods of lightning activity.

Waarschuwing Tijdens onweer dat gepaard gaat met bliksem, dient u niet aan het systeem te werken of kabels aan te sluiten of te ontkoppelen.

Varoitus Älä työskentele järjestelmän parissa äläkä yhdistä tai irrota kaapeleita ukkosilmalla.

Avertissement Ne pas travailler sur le système ni brancher ou débrancher les câbles pendant un orage.

Warnung Arbeiten Sie nicht am System und schließen Sie keine Kabel an bzw. trennen Sie keine ab, wenn es gewittert.

Avvertenza Non lavorare sul sistema o collegare oppure scollegare i cavi durante un temporale con fulmini.

Advarsel Utfør aldri arbeid på systemet, eller koble kabler til eller fra systemet når det tordner eller lyner.

Aviso Não trabalhe no sistema ou ligue e desligue cabos durante períodos de mau tempo (trovoada).

¡Atención! No operar el sistema ni conectar o desconectar cables durante el transcurso de descargas eléctricas en la atmósfera.

Varning! Vid åska skall du aldrig utföra arbete på systemet eller ansluta eller koppla loss kablar.

Operating Temperature Warning



WARNING: To prevent the device from overheating, do not operate it in an area that exceeds the maximum recommended ambient temperature. To prevent airflow restriction, allow at least 6 in. (15.2 cm) of clearance around the ventilation openings.

Waarschuwing Om te voorkomen dat welke switch van de Juniper Networks router dan ook oververhit raakt, dient u deze niet te bedienen op een plaats waar de maximale aanbevolen omgevingstemperatuur van 40° C wordt overschreden. Om te voorkomen dat de luchtstroom wordt beperkt, dient er minstens 15,2 cm speling rond de ventilatie-openingen te zijn.

Varoitus Ettei Juniper Networks switch-sarjan reititin ylikuumentuisi, sitä ei saa käyttää tilassa, jonka lämpötila ylittää korkeimman suositellun ympäristölämpötilan 40° C. Ettei ilmanvaihto estyisi, tuuletusaukkojen ympärille on jätettävä ainakin 15,2 cm tilaa.

Avertissement Pour éviter toute surchauffe des routeurs de la gamme Juniper Networks switch, ne l'utilisez pas dans une zone où la température ambiante est supérieure à 40° C. Pour permettre un flot d'air constant, dégagez un espace d'au moins 15,2 cm autour des ouvertures de ventilations.

Warnung Um einen Router der switch vor Überhitzung zu schützen, darf dieser nicht in einer Gegend betrieben werden, in der die Umgebungstemperatur das empfohlene Maximum von 40° C überschreitet. Um Lüftungsverschluß zu verhindern, achten Sie darauf, daß mindestens 15,2 cm lichter Raum um die Lüftungsöffnungen herum frei bleibt.

Avvertenza Per evitare il surriscaldamento dei switch, non adoperateli in un locale che ecceda la temperatura ambientale massima di 40° C. Per evitare che la circolazione dell'aria sia impedita, lasciate uno spazio di almeno 15.2 cm di fronte alle aperture delle ventole.

Advarsel Unngå overoppheting av eventuelle rutere i Juniper Networks switch Disse skal ikke brukes på steder der den anbefalte maksimale omgivelsestemperaturen overstiger 40° C (104° F). Sørg for at klaringen rundt lufteåpningene er minst 15,2 cm (6 tommer) for å forhindre nedsatt luftsirkulasjon.

Aviso Para evitar o sobreaquecimento do encaminhador Juniper Networks switch, não utilize este equipamento numa área que exceda a temperatura máxima recomendada de 40° C. Para evitar a restrição à circulação de ar, deixe pelo menos um espaço de 15,2 cm à volta das aberturas de ventilação.

¡Atención! Para impedir que un encaminador de la serie Juniper Networks switch se recaliente, no lo haga funcionar en un área en la que se supere la temperatura ambiente máxima recomendada de 40° C. Para impedir la restricción de la entrada de aire, deje un espacio mínimo de 15,2 cm alrededor de las aperturas para ventilación.

Varning! Förhindra att en Juniper Networks switch överhettas genom att inte använda den i ett område där den maximalt rekommenderade omgivningstemperaturen på 40° C överskrids. Förhindra att luftcirkulationen inskränks genom att se till att det finns fritt utrymme på minst 15,2 cm omkring ventilationsöppningarna.

Product Disposal Warning



WARNING: Disposal of this device must be handled according to all national laws and regulations.

Waarschuwing Dit produkt dient volgens alle landelijke wetten en voorschriften te worden afgedankt.

Varoitus Tämän tuotteen lopullisesta hävittämisestä tulee huolehtia kaikkia valtakunnallisia lakeja ja säännöksiä noudattaen.

Avertissement La mise au rebut définitive de ce produit doit être effectuée conformément à toutes les lois et réglementations en vigueur.

Warnung Dieses Produkt muß den geltenden Gesetzen und Vorschriften entsprechend entsorgt werden.

Avvertenza L'eliminazione finale di questo prodotto deve essere eseguita osservando le normative italiane vigenti in materia

Advarsel Endelig disponering av dette produktet må skje i henhold til nasjonale lover og forskrifter.

Aviso A descartagem final deste produto deverá ser efectuada de acordo com os regulamentos e a legislação nacional.

¡Atención! El desecho final de este producto debe realizarse según todas las leyes y regulaciones nacionales

Varning! Slutlig kassering av denna produkt bör skötas i enlighet med landets alla lagar och föreskrifter.

Action to Take After an Electrical Accident

If an electrical accident results in an injury, take the following actions in this order:

1. Use caution. Be aware of potentially hazardous conditions that could cause further injury.
2. Disconnect power from the device.
3. If possible, send another person to get medical aid. Otherwise, assess the condition of the victim, and then call for help.

General Electrical Safety Guidelines and Warnings



WARNING: Certain ports on the device are designed for use as intrabuilding (within-the-building) interfaces only (Type 2 or Type 4 ports as described in *GR-1089-CORE*) and require isolation from the exposed outside plant (OSP) cabling. To comply with NEBS (Network Equipment-Building System) requirements and protect against lightning surges and commercial power disturbances, the intrabuilding ports *must not* be metallically connected to interfaces that connect to the OSP or its wiring. The intrabuilding ports on the device are suitable for connection to intrabuilding or unexposed wiring or cabling only. The addition of primary protectors is not sufficient protection for connecting these interfaces metallically to OSP wiring.

Avertissement Certains ports de l'appareil sont destinés à un usage en intérieur uniquement (ports Type 2 ou Type 4 tels que décrits dans le document *GR-1089-CORE*) et doivent être isolés du câblage de l'installation extérieure exposée. Pour respecter les exigences NEBS et assurer une protection contre la foudre et les perturbations de tension secteur, les ports pour intérieur *ne doivent pas* être raccordés physiquement aux interfaces prévues pour la connexion à l'installation extérieure ou à son câblage. Les ports pour intérieur de l'appareil sont réservés au raccordement de câbles pour intérieur ou non exposés uniquement. L'ajout de protections ne constitue pas une précaution suffisante pour raccorder physiquement ces interfaces au câblage de l'installation extérieure.



CAUTION: Before removing or installing components of a device, connect an electrostatic discharge (ESD) grounding strap to an ESD point and wrap and fasten the

other end of the strap around your bare wrist. Failure to use an ESD grounding strap could result in damage to the device.

Attention Avant de retirer ou d'installer des composants d'un appareil, raccordez un bracelet antistatique à un point de décharge électrostatique et fixez le bracelet à votre poignet nu. L'absence de port d'un bracelet antistatique pourrait provoquer des dégâts sur l'appareil.

- Install the device in compliance with the following local, national, and international electrical codes:
  - United States—National Fire Protection Association (NFPA 70), United States National Electrical Code.
  - Other countries—International Electromechanical Commission (IEC) 60364, Part 1 through Part 7.
  - Evaluated to the TN power system.
  - Canada—Canadian Electrical Code, Part 1, CSA C22.1.
  - Suitable for installation in Information Technology Rooms in accordance with Article 645 of the National Electrical Code and NFPA 75.

    Peut être installé dans des salles de matériel de traitement de l'information conformément à l'article 645 du National Electrical Code et à la NFPA 75.
- Locate the emergency power-off switch for the room in which you are working so that if an electrical accident occurs, you can quickly turn off the power.
- Make sure that you clean grounding surface and give them a bright finish before making grounding connections.
- Do not work alone if potentially hazardous conditions exist anywhere in your workspace.
- Never assume that power is disconnected from a circuit. Always check the circuit before starting to work.
- Carefully look for possible hazards in your work area, such as moist floors, ungrounded power extension cords, and missing safety grounds.
- Operate the device within marked electrical ratings and product usage instructions.
- To ensure that the device and peripheral equipment function safely and correctly, use the cables and connectors specified for the attached peripheral equipment, and make certain they are in good condition.

You can remove and replace many device components without powering off or disconnecting power to the device, as detailed elsewhere in the hardware documentation for this device. Never install equipment that appears to be damaged.

SSR1200 Agency Approvals

The SSR1200 appliance complies with the following standards:

- Safety
  - NRTL-UL60950-1 (Second Edition)
  - C-UL to CAN/CSA 22.2 No.60950-1 (Second Edition)
  - CB-IEC60950-1 (Second Edition with all country deviations)
  - EN 60825-1 (Second Edition)
  - IEC 62368-1 2nd Edition
- EMC
  - FCC 47 CFR Part 15
  - ICES-003 / ICES-GEN
  - CISPR 32/EN 55032
  - CISPR 24/EN 55024
  - CISPR 35/EN 55035
  - AS/NZS CISPR 32
  - VCCI-CISPR 32
  - EN/IEC 61000 Series
  - KN 32 and KN 35
  - KN 61000 Series
  - BSMI CNS 13438
  - TEC/SD/DD/EMC-221/05/OCT-16
- Environmental
  - Reduction of hazardous Substances (ROHS) 6of6 with no exemptions
  - 7a exemption for power supply components acceptable
- Homologation

  - Argentina - EQUIPO DE USO IDÓNEO
- ETSI
- CLEI
- TNC IF-PEP
- TAA SKUs
- WEEE
- REACH

FCC Declarations

This equipment has been tested and found to comply with the limits for a Class A digital device, pursuant to Part 15 of FCC Rules. These limits are designed to provide reasonable protection against harmful interference in a residential installation. This equipment generates, uses and can radiate radio frequency energy and, if not installed and used in accordance with the instructions, may cause harmful interference to radio communications. However, there is no guarantee that interference will not occur in a particular installation. If this equipment does cause harmful interference to radio or television reception, which can be determined by turning the equipment off and on, the user is encouraged to try to correct the interference by one or more of the following measures:

- Reorient or relocate the receiving antenna
- Increase the separation between the equipment and receiver
- Connect the equipment into an outlet on a circuit different from that to which the receiver is connected.
- Consult the dealer or an experienced radio/TV technician for help.



CAUTION: Any changes or modifications not expressly approved by the party responsible for compliance could void the user's authority to operate this equipment. This transmitter must not be co-located or operating in conjunction with any other antenna or transmitter.

NOTE: An unshielded-type power cord is required in order to meet FCC emission limits and also to prevent interference to the nearby radio and television reception. It is essential that only the supplied power cord be used.
Use only shielded cables to connect I/O devices to this appliance.

Changes or modifications not expressly approved by the party responsible for compliance could void the user's authority to operate the appliance.

NOTE: Operations in the 5.15-5.25GHz band are restricted to indoor usage only.

Lithium Battery Declaration

The appliance has a CR2032 lithium battery. Follow the guidelines while replacing the battery:

- There is a risk of explosion if the battery is replaced by an incorrect type.
- Replace the battery only with the same or equivalent type.
- Dispose used batteries according to the local laws and regulations regarding safe disposal of lithium batteries.
- Disposal of a battery into a fire or by crushing or puncturing it can result in an explosion.
- Leaving a battery in an extremely high temperature environment can result in an explosion or the leakage of flammable liquid or gas.
- A battery subjected to extremely low air pressure may result in an explosion or the leakage of flammable liquid or gas.
- Installation should be done only by a trained electrician who knows all installation procedures and device specifications.
- Do not ingest battery. Chemical burn hazard. This product contains a coin/ button cell battery. If the coin/button cell battery is swallowed, it can cause severe internal burns in just 2 hours and can lead to death. Keep new and used batteries away from children. If the battery compartment does not close securely, stop using the product and keep it away from children. If you think batteries could have been swallowed or placed inside any part of the body, seek immediate medical attention.