BENQ EX271QZ
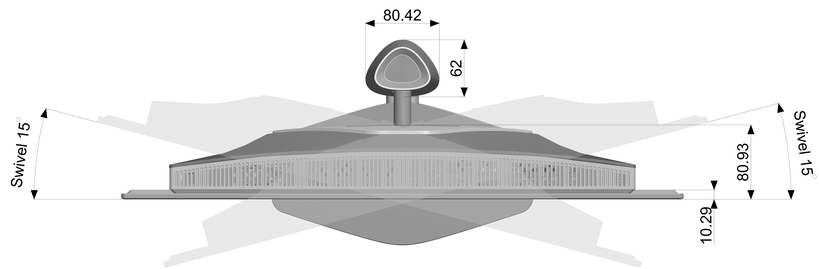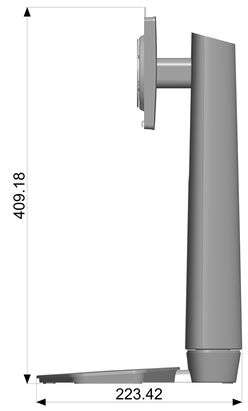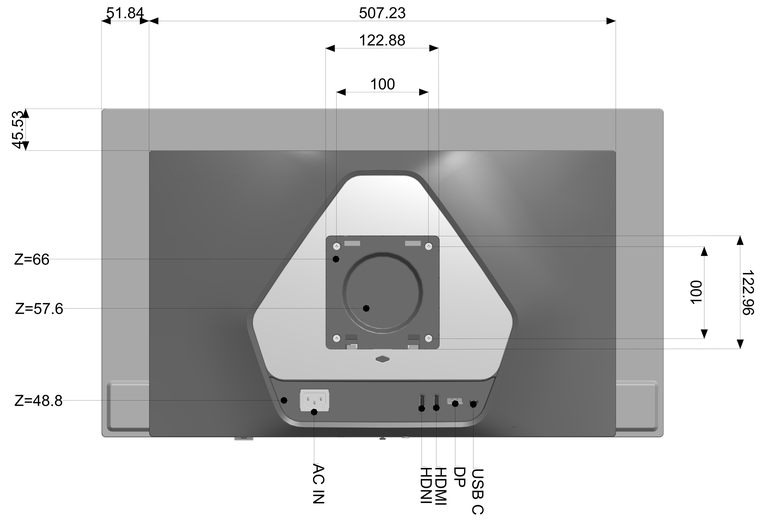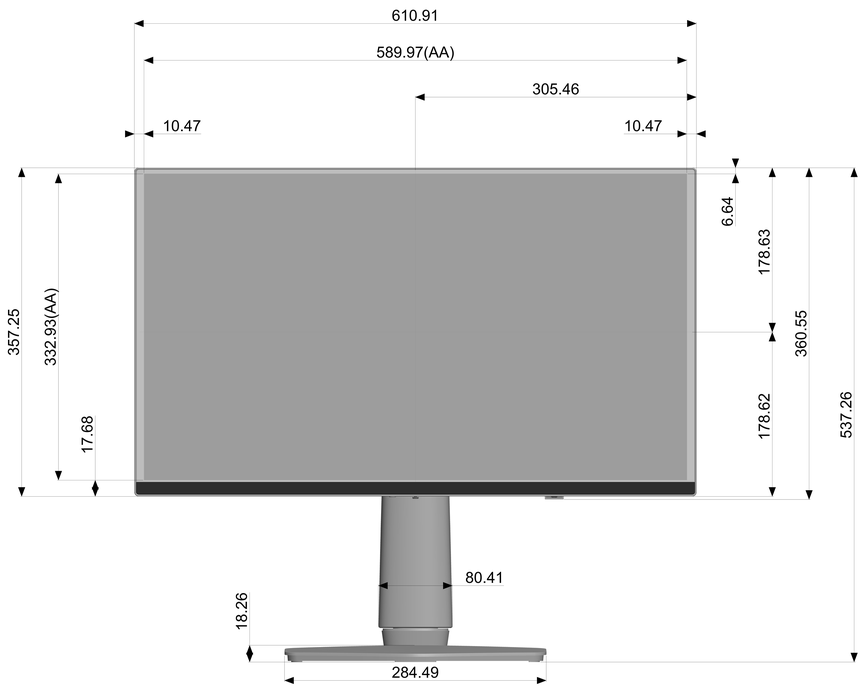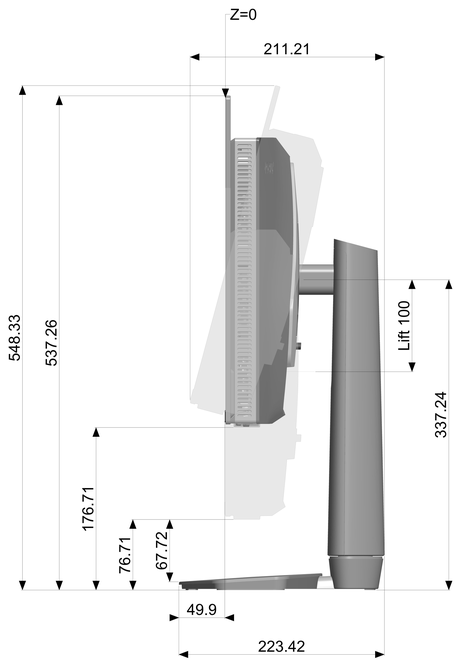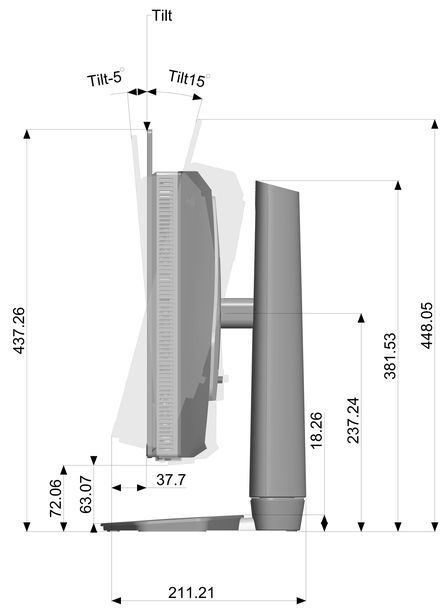
Unit:mm
Dimension:Normal
Drawing:Not to scalae