Lenovo

ThinkSystem ST45 V3
Hardware Maintenance Guide



Machine Types: 7DH4, 7DH5

Note

Before using this information and the product it supports, be sure to read and understand the safety information and the safety instructions, which are available at:
https://pubs.lenovo.com/safety_documentation/

In addition, be sure that you are familiar with the terms and conditions of the Lenovo warranty for your server, which can be found at:
http://datacentersupport.lenovo.com/warrantylookup

Sixth Edition (November 2025)

© Copyright Lenovo 2024, 2025.

LIMITED AND RESTRICTED RIGHTS NOTICE: If data or software is delivered pursuant to a General Services Administration (GSA) contract, use, reproduction, or disclosure is subject to restrictions set forth in Contract No. GS-35F-05925.

Contents

Contents i

Safety iii

Safety inspection checklist iv

Chapter 1. Hardware replacement procedures 1

Installation Guidelines 1
- Safety inspection checklist. 2
- System reliability guidelines 3
- Handling static-sensitive devices 3

Memory module installation rules and order 5

Power on and power off the server 6
- Power on the server 6
- Power off the server 6

Server replacement 6
- Remove the server from rack 6
- Install the server to rack 8

CMOS battery (CR2032) replacement 12
- Remove the CMOS battery (CR2032) 12
- Install the CMOS battery (CR2032) 14

Drive and drive cage replacement 16
- Simple-swap drive and drive cage replacement (bay 0-1) 16
- Simple-swap drive and drive cage replacement (bay 2) 30
- Simple-swap drive and drive cage replacement (bay 3) 40
- Optical drive and drive cage replacement . . . 51

Fan replacement 62
- Remove the fan (front and rear) 62
- Install the fan (front and rear) 65

Front bezel replacement 67
- Remove the front bezel 67
- Install the front bezel 68

Heat sink and fan module replacement (trained technician only) 69
- Remove the heat sink and fan module (trained technician only) 69
- Install the heat sink and fan module (trained technician only) 71

M.2 drive replacement 73
- Remove an M.2 drive 73
- Install an M.2 drive 75
- Remove the M.2 drive retainer 77
- Install the M.2 drive retainer 79

Memory module replacement 80
- Remove a memory module 80
- Install a memory module 83

Mono amplifier (speaker) replacement 86
- Remove the mono amplifier (speaker) 86
- Install the mono amplifier (speaker) 87

PCIe adapter replacement. 88
- Remove a PCIe adapter 88
- Install a PCIe adapter 91

Power button with LED replacement. 93
- Remove the power button with LED 93
- Install the power button with LED 97

Power supply unit replacement 99
- Remove the power supply unit 99
- Install the power supply unit 102

Processor replacement (trained technician only) 105
- Remove the processor (trained technician only) 105
- Install the processor (trained technician only) 107

System board replacement (trained technician only) 109
- Remove the system board 110
- Install the system board 114

Server cover replacement 118
- Remove the server cover 118
- Install the server cover 120

Thermal sensor replacement. 123
- Remove the thermal sensor 123
- Install the thermal sensor 125

Complete the parts replacement 126

Chapter 2. Internal cable routing . . . 129

Cable routing for bay 0 drive 130

Cable routing for bay 1 drive 131

Cable routing for bay 2 drive 133

Cable routing for bay 3 drive 135

Cable routing for optical disk drive 136

Cable routing for the RAID adapter and drives . . . 138

Cable routing for the power supply unit 141

Cable routing for the front fan and rear fan 142

Cable routing for the heat sink and fan module. . . 143

Cable routing for the thermal sensor 144

Cable routing for the mono amplifier 145

Cable routing for the power button with LED . . . 146

Chapter 3. Problem determination 147

© Copyright Lenovo 2024, 2025

Event logs 147
Troubleshooting by LEDs 147
System-board LED 147
Ethernet port (10/100/1000 Mbps RJ-45) LEDs 148
General problem determination procedures 149
Resolving suspected power problems 149
Resolving suspected Ethernet controller problems 150
Troubleshooting by symptom 150
Audio problems 151
Intermittent problems 151
Keyboard, mouse, KVM switch or USB-device problems 151
Memory problems 152
Microsoft Server 2022 activation problem . . . 153
Microsoft Server 2025 activation problem . . . 154
Monitor and video problems 156
Network problems 158
Observable problems 158
Optional-device problems 159
Performance problems 161
Power on and power off problems 161
Software problems 162
Storage drive problems 162
UEFI upgrade problem 163

Appendix A. Getting help and technical assistance 165
Before you call 165
Contacting Support 166

Appendix B. Documents and supports 167
Documents download 167
Support websites 167

Appendix C. Notices 169
Trademarks 170
Important notes 170
Electronic emission notices 170
Taiwan Region BSMI RoHS declaration 171
Taiwan Region import and export contact information 171
China Energy Label (CEL) 171

Safety

Before installing this product, read the Safety Information.

قبل تركيب هذا المنتج، يجب قراءة الملاحظات الآمنية

Antes de instalar este produto, leia as Informações de Segurança.

在安装本产品之前，请仔细阅读 Safety Information （安全信息）。

安裝本產品之前，請先閱讀「安全資訊」。

Prije instalacije ovog produkta obavezno pročitajte Sigurnosne Upute.

Před instalací tohoto produktu si přečtěte příručku bezpečnostních instrukcí.

Læs sikkerhedsforskrifterne, før du installerer dette produkt.

Lees voordat u dit product installeert eerst de veiligheidsvoorschriften.

Ennen kuin asennat tämän tuotteen, lue turvaohjeet kohdasta Safety Information.

Avant d'installer ce produit, lisez les consignes de sécurité.

Vor der Installation dieses Produkts die Sicherheitshinweise lesen.

Πριν εγκαταστήσετε το προϊόν αυτό, διαβάστε τις πληροφορίες ασφάλειας (safety information).

לפני שתתקינו מוצר זה, קראו את הוראות הבטיחות.

A termék telepítése előtt olvassa el a Biztonsági előírásokat!

Prima di installare questo prodotto, leggere le Informazioni sulla Sicurezza.

製品の設置の前に、安全情報をお読みください。

본 제품을 설치하기 전에 안전 정보를 읽으십시오.

Пред да се инсталира овој продукт, прочитајте информацијата за безбедност.

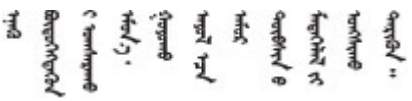

Les sikkerhetsinformasjonen (Safety Information) før du installerer dette produktet.

Przed zainstalowaniem tego produktu, należy zapoznać się z książką "Informacje dotyczące bezpieczeństwa" (Safety Information).

Antes de instalar este produto, leia as Informações sobre Segurança.

© Copyright Lenovo 2024, 2025

Перед установкой продукта прочтите инструкции по технике безопасности.

Pred inštaláciou tohto zariadenia si pečítaje Bezpečnostné predpisy.

Pred namestitvijo tega proizvoda preberite Varnostne informacije.

Antes de instalar este producto, lea la información de seguridad.

Läs säkerhetsinformationen innan du installerar den här produkten.

ཐོན་རྫས་འདི་བདེ་སྤྱོད་མ་བྱས་གོང་། ་སྐོར་གྱི་ཡིད་གཟབ་བྱ་འདྲ་མིན་ཡོད་པའི་འོད་སྡེར་བལྟ་དགོས།

Bu ürünü kurmadan önce güvenlik bilgilerini okuyun.

مەزكۇر مەھسۇلاتنى ئورنىتىشتىن بۇرۇن بىخەتەرلىك ئۇچۇرلىرىنى ئوقۇپ چىقىڭ.

Youq mwngz yungh canjbinj neix gaxgonq, itdingh aeu doeg aen canjbinj soengq cungj vahgangj ancien siusik.

Safety inspection checklist

Use the information in this section to identify potentially unsafe conditions with your server. As each machine was designed and built, required safety items were installed to protect users and service technicians from injury.

Note: The product is not suitable for use at visual display workplaces according to §2 of the Workplace Regulations.

Attention: This is a Class A product. In a domestic environment, this product may cause radio interference in which case the user may be required to take adequate measures.

CAUTION:
This equipment must be installed or serviced by trained personnel, as defined by the IEC 62368-1, the standard for Safety of Electronic Equipment within the Field of Audio/Video, Information Technology and Communication Technology. Lenovo assumes you are qualified in the servicing of equipment and trained in recognizing hazards energy levels in products. Access to the equipment is by the use of a tool, lock and key, or other means of security, and is controlled by the authority responsible for the location.

Important: Electrical grounding of the server is required for operator safety and correct system function. Proper grounding of the electrical outlet can be verified by a certified electrician.

Use the following checklist to verify that there are no potentially unsafe conditions:

1. Make sure that the power is off and the power cord is disconnected.
2. Check the power cord.
   - Make sure that the third-wire ground connector is in good condition. Use a meter to measure third-wire ground continuity for 0.1 ohm or less between the external ground pin and the frame ground.
   - Make sure that the power cord is the correct type.

     To view the power cords that are available for the server:

     a. Go to:

http://dcsc.lenovo.com/#/

b. Click **Preconfigured Model** or **Configure to order**.

c. Enter the machine type and model for your server to display the configurator page.

d. Click **Power → Power Cables** to see all line cords.

- Make sure that the insulation is not frayed or worn.

3. Check for any obvious non-Lenovo alterations. Use good judgment as to the safety of any non-Lenovo alterations.
4. Check inside the server for any obvious unsafe conditions, such as metal filings, contamination, water or other liquid, or signs of fire or smoke damage.
5. Check for worn, frayed, or pinched cables.
6. Make sure that the power-supply cover fasteners (screws or rivets) have not been removed or tampered with.

© Copyright Lenovo 2024, 2025

Chapter 1. Hardware replacement procedures

This chapter provides installation and removal procedures for all serviceable system components. Each component replacement procedure references any tasks that need to be performed to gain access to the component being replaced.

Installation Guidelines

Before installing components in your server, read the installation guidelines.

Before installing optional devices, read the following notices carefully:

Attention: Prevent exposure to static electricity, which might lead to system halt and loss of data, by keeping static-sensitive components in their static-protective packages until installation, and handling these devices with an electrostatic-discharge wrist strap or other grounding system.

- Read the safety information and guidelines to ensure your safety at work:
  - A complete list of safety information for all products is available at:

    https://pubs.lenovo.com/safety_documentation/
  - “Handling static-sensitive devices” on page 3.
- Make sure the components you are installing are supported by the server.
  - For a list of supported optional components for the server, see https://serverproven.lenovo.com.
  - For the option package contents, see https://serveroption.lenovo.com/.
- For more information about ordering parts:
  1. Go to **http://datacentersupport.lenovo.com** and navigate to the support page for your server.
  2. Click **Parts**.
  3. Enter the serial number to view a listing of parts for your server.
- When you install a new server, download and apply the latest firmware. This will help ensure that any known issues are addressed, and that your server is ready to work with optimal performance. Go to https://datacentersupport.lenovo.com/products/servers/thinksystem/st45v3/downloads/driver-list/ to download firmware updates for your server.

  Important: Some cluster solutions require specific code levels or coordinated code updates. If the component is part of a cluster solution, verify the latest Best Recipe code level menu for cluster supported firmware and driver before you update the code.
- If you replace a part, such as an adapter, that contains firmware, you might also need to update the firmware for that part. For more information about updating firmware, see “Update the firmware” in *User Guide* or *System Configuration Guide*.
- It is good practice to make sure that the server is working correctly before you install an optional component.
- Keep the working area clean, and place removed components on a flat and smooth surface that does not shake or tilt.
- Do not attempt to lift an object that might be too heavy for you. If you have to lift a heavy object, read the following precautions carefully:
  - Make sure that you can stand steadily without slipping.
  - Distribute the weight of the object equally between your feet.

© Copyright Lenovo 2024, 2025

  - Use a slow lifting force. Never move suddenly or twist when you lift a heavy object.
  - To avoid straining the muscles in your back, lift by standing or by pushing up with your leg muscles.
- Back up all important data before you make changes related to the disk drives.
- Have a small flat-blade screwdriver and a small Phillips screwdriver available.
- You do not have to turn off the server to remove or install hot-plug USB devices. However, you must turn off the server before you perform any steps that involve removing or installing adapter cables, and you must disconnect the power source from the server before you perform any steps that involve removing or installing a processor, DIMM, HDD, M.2, ODD, or fan.
- Blue on a component indicates touch points, where you can grip to remove a component from or install it in the server, open or close a latch, and so on.
- Orange on a component or an orange label on or near a component indicates that the component can be hot-swapped if the server and operating system support hot-swap capability, which means that you can remove or install the component while the server is still running. (Orange can also indicate touch points on hot-swap components.) See the instructions for removing or installing a specific hot-swap component for any additional procedures that you might have to perform before you remove or install the component.
- The red strip on the drives, adjacent to the release latch, indicates that the drive can be hot-swapped if the server and operating system support hot-swap capability. This means that you can remove or install the drive while the server is still running.

  Note: See the system specific instructions for removing or installing a hot-swap drive for any additional procedures that you might need to perform before you remove or install the drive.
- After finishing working on the server, make sure you reinstall all safety shields, guards, labels, and ground wires.

Safety inspection checklist

Use the information in this section to identify potentially unsafe conditions with your server. As each machine was designed and built, required safety items were installed to protect users and service technicians from injury.

Note: The product is not suitable for use at visual display workplaces according to §2 of the Workplace Regulations.

Attention: This is a Class A product. In a domestic environment, this product may cause radio interference in which case the user may be required to take adequate measures.

CAUTION:
This equipment must be installed or serviced by trained personnel, as defined by the IEC 62368-1, the standard for Safety of Electronic Equipment within the Field of Audio/Video, Information Technology and Communication Technology. Lenovo assumes you are qualified in the servicing of equipment and trained in recognizing hazards energy levels in products. Access to the equipment is by the use of a tool, lock and key, or other means of security, and is controlled by the authority responsible for the location.

Important: Electrical grounding of the server is required for operator safety and correct system function. Proper grounding of the electrical outlet can be verified by a certified electrician.

Use the following checklist to verify that there are no potentially unsafe conditions:

1. Make sure that the power is off and the power cord is disconnected.
2. Check the power cord.
   - Make sure that the third-wire ground connector is in good condition. Use a meter to measure third-wire ground continuity for 0.1 ohm or less between the external ground pin and the frame ground.

- Make sure that the power cord is the correct type.

  To view the power cords that are available for the server:

  a. Go to:

     http://dcsc.lenovo.com/#/

  b. Click **Preconfigured Model** or **Configure to order**.

  c. Enter the machine type and model for your server to display the configurator page.

  d. Click **Power → Power Cables** to see all line cords.
- Make sure that the insulation is not frayed or worn.

3. Check for any obvious non-Lenovo alterations. Use good judgment as to the safety of any non-Lenovo alterations.
4. Check inside the server for any obvious unsafe conditions, such as metal filings, contamination, water or other liquid, or signs of fire or smoke damage.
5. Check for worn, frayed, or pinched cables.
6. Make sure that the power-supply cover fasteners (screws or rivets) have not been removed or tampered with.

System reliability guidelines

Review the system reliability guidelines to ensure proper system cooling and reliability.

Make sure the following requirements are met:

- Adequate space around the server must be spared to allow server cooling system to work properly. Leave approximately 50 mm (2.0 in.) of open space around the front and rear of the server. Do not place any object in front of the fans.
- For proper cooling and airflow, refit the server cover before you turn the power on. Do not operate the server for more than 30 minutes with the server cover removed, for it might damage server components.
- Cabling instructions that come with optional components must be followed.
- A failed fan must be replaced within 48 hours after malfunction.
- The processor socket must contain either a socket cover or a processor with heat sink.

Handling static-sensitive devices

Review these guidelines before you handle static-sensitive devices to reduce the possibility of damage from electrostatic discharge.

Attention: Prevent exposure to static electricity, which might lead to system halt and loss of data, by keeping static-sensitive components in their static-protective packages until installation, and handling these devices with an electrostatic-discharge wrist strap or other grounding system.

- Limit your movement to prevent building up static electricity around you.
- Take additional care when handling devices during cold weather, for heating would reduce indoor humidity and increase static electricity.
- Always use an electrostatic-discharge wrist strap or other grounding system, particularly when working inside the server with the power on.
- While the device is still in its static-protective package, touch it to an unpainted metal surface on the outside of the server for at least two seconds. This drains static electricity from the package and from your body.

- Remove the device from the package and install it directly into the server without putting it down. If it is necessary to put the device down, put it back into the static-protective package. Never place the device on the server or on any metal surface.
- When handling a device, carefully hold it by the edges or the frame.
- Do not touch solder joints, pins, or exposed circuitry.
- Keep the device from others' reach to prevent possible damages.

Memory module installation rules and order

Memory modules must be installed in a specific order based on the memory configuration that you implement and the number of processors and memory modules installed in the server.

Supported memory types

For information on the types of memory module supported by this server, see “Technical Specifications” in *User Guide* or *System Configuration Guide*.

Information about optimizing memory performance and configuring memory is available at the Lenovo Press website:

https://lenovopress.lenovo.com/servers/options/memory

In addition, you can take advantage of a memory configurator, which is available at the following site:

https://dcsc.lenovo.com/#/memory_configuration

Memory modules and processors layout

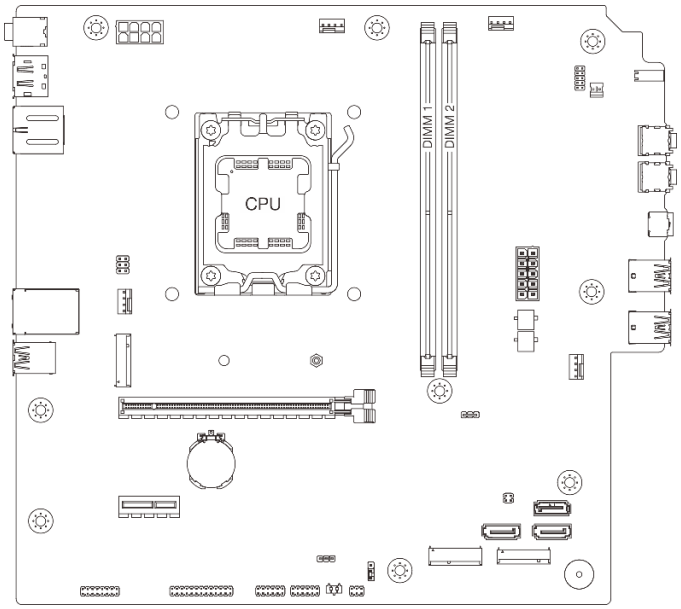

Figure 1. Memory modules and processor layout

Table 1. Memory slot and channel identification

Channel	Channel A	Channel B
Slot number	DIMM 1	DIMM 2

Memory mode and installation order

This server supports independent mode only.

Independent mode provides high performance memory capability. You can populate all channels with no matching requirements. Individual channels can run at different memory module timings, but all channels must run at the same interface frequency.

Note: Memory modules of different capacity cannot be mixed on the same server.

The following table shows the memory module installation order:

Table 2. Memory module installation order

Total memory module installed	Memory module slot number		Memory speed
	1	2	
One	√		• 5200 MHz for 4004 series processors • 5600 MHz for 4005 series processors
One		√	
Two	√	√	

Power on and power off the server

Follow the instructions in this section to power on and power off the server.

Power on the server

Power button location and power LED locations are specified in “Front view” in *User Guide* or *System Configuration Guide*.

The server can be turned on (power LED on) in any of the following ways:

- Press the power button.
- The server can restart automatically after a power interruption.

Power off the server

The server remains in a standby state when it is connected to a power source. To remove all power from the server (power LED off), you must disconnect all power cables.

Power button location and power LED locations are specified in “Front view” in *User Guide* or *System Configuration Guide*.

To place the server in a standby state:

- Start an orderly shutdown using the operating system (if supported by your operating system).
- Press the power button to start an orderly shutdown (if supported by your operating system).
- Press and hold the power button for more than 4 seconds to force a shutdown.

Server replacement

Follow instructions in this section to remove and install the server.

Remove the server from rack

Follow instructions in this section to remove the server from the rack.

S002

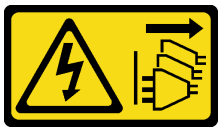

CAUTION:
The power-control button on the device and the power switch on the power supply do not turn off the electrical current supplied to the device. The device also might have more than one power cord. To remove all electrical current from the device, ensure that all power cords are disconnected from the power source.

S014



CAUTION:
Hazardous voltage, current, and energy levels might be present. Only a qualified service technician is authorized to remove the covers where the label is attached.

S033



CAUTION:
Hazardous energy present. Voltages with hazardous energy might cause heating when shorted with metal, which might result in spattered metal, burns, or both.

About this task

Attention:

- Read “Installation Guidelines” on page 1 and “Safety inspection checklist” on page 2 to ensure that you work safely.
- Power off the server and peripheral devices and disconnect the power cords and all external cables. See “Power off the server” on page 6.

Procedure

Note: Your system might look slightly different from the illustration below.

Step 1. Remove the two M6 x 16 screws on the front of the rack cabinet.

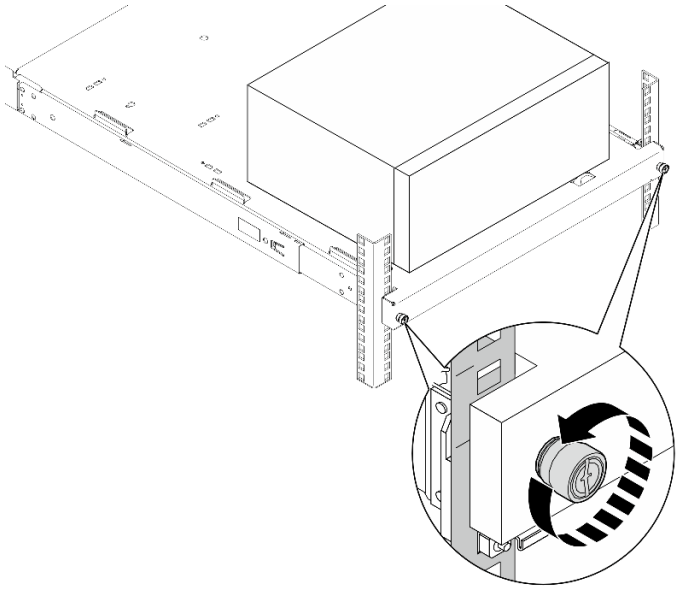

Figure 2. Removing the screws on the front of the rack cabinet

Step 2. Remove the server from the rails.

a. ❶ Slide and pull the rack server tray out of the rack cabinet.

b. ❷ Lift the server out of the tray.

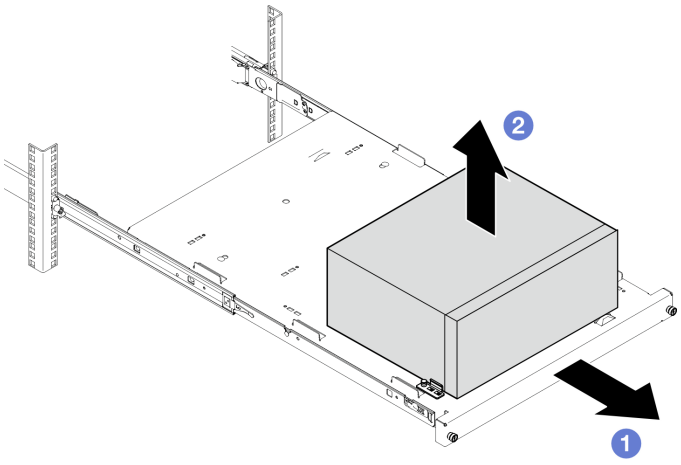

Figure 3. Removing the server from the rails

After you finish

1. Place the server on its side with the cover up.
2. To install the server to the rails, see "Install the server to rack" on page 8.

Install the server to rack

Follow instructions in this section to install the server to the rack.

S002

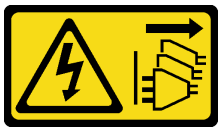

CAUTION:
The power-control button on the device and the power switch on the power supply do not turn off the electrical current supplied to the device. The device also might have more than one power cord. To remove all electrical current from the device, ensure that all power cords are disconnected from the power source.

S014



CAUTION:
Hazardous voltage, current, and energy levels might be present. Only a qualified service technician is authorized to remove the covers where the label is attached.

S033



CAUTION:
Hazardous energy present. Voltages with hazardous energy might cause heating when shorted with metal, which might result in spattered metal, burns, or both.

About this task

Attention:

- Read “Installation Guidelines” on page 1 and “Safety inspection checklist” on page 2 to ensure that you work safely.
- Power off the server and peripheral devices and disconnect the power cords and all external cables. See “Power off the server” on page 6.

Note: To install rails to rack, see the *Rail Installation Guide* at https://serveroption.lenovo.com/rail_options/rail_options_tower_servers.

Firmware and driver download: You might need to update the firmware or driver after replacing a component.

- Go to https://datacentersupport.lenovo.com/products/servers/thinksystem/st45v3/downloads/driver-list/ to see the latest firmware and driver updates for your server.
- Go to “Update the firmware” in *User Guide* or *System Configuration Guide* for more information on firmware updating tools.

Procedure

Step 1. Install the four brackets to the tray as illustrated.

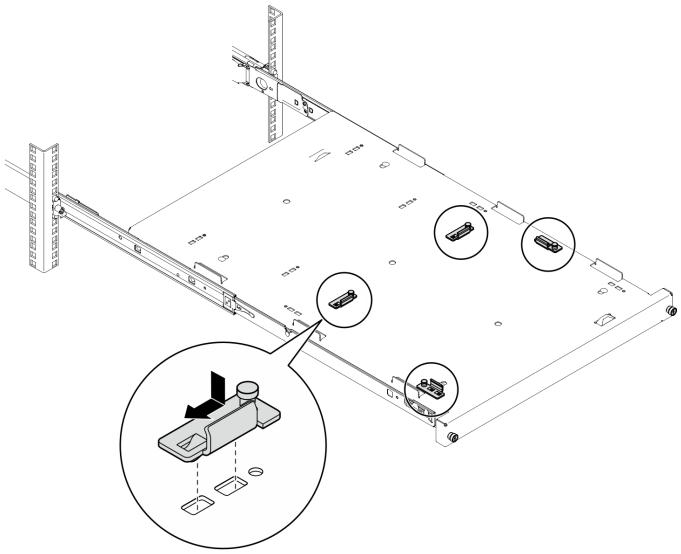

Figure 4. Installing the brackets to the tray

Step 2. Install the four rubber safety pads to the tray as illustrated.

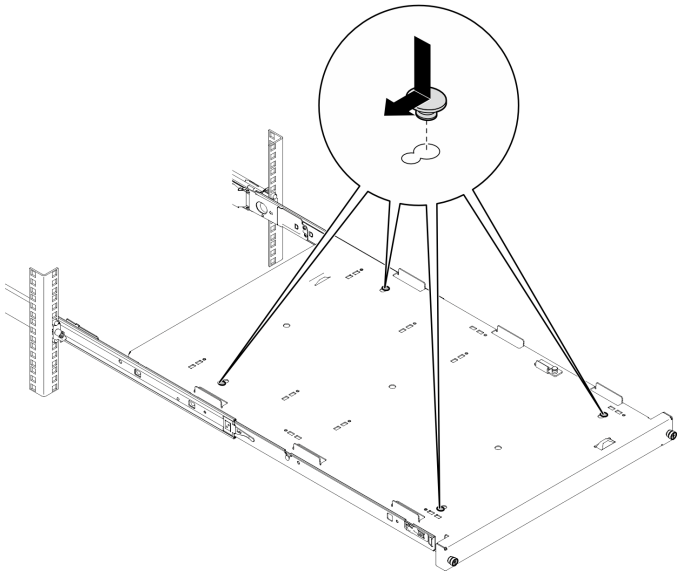

Figure 5. Installing the rubber safety pads to the tray

Step 3. Orient the server to have the server cover facing up and the front bezel facing the front of the rails; then, align the server with the brackets and the tab on the front of the tray, and gently place the server on the tray.

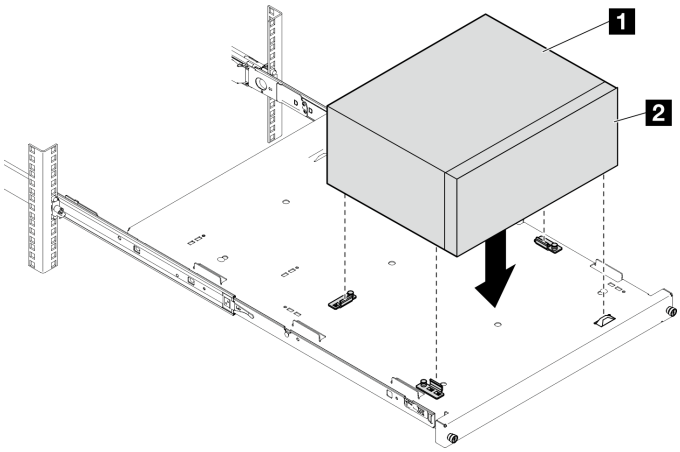

Figure 6. Installing the server to the tray

1	Server cover
2	Server front bezel

Step 4. Install the server into the rack cabinet.

a. 1 Lift the rail latches on both sides.

b. 2 Gently slide and push the tray into the rack cabinet.

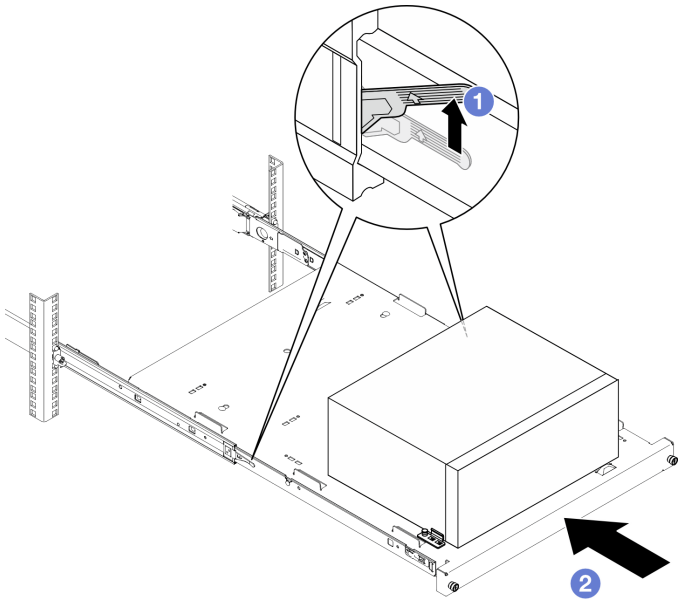

Figure 7. Installing the server into the rack cabinet

Step 5. Secure the tray with two M6 x 16 screws to the front of the rack cabinet.

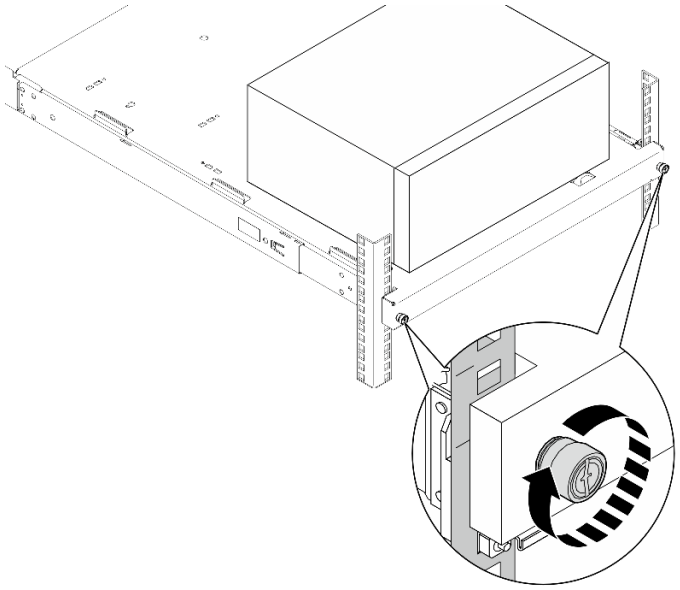

Figure 8. Securing the tray with screws

After you finish

Complete the parts replacement. See “Complete the parts replacement” on page 126.

CMOS battery (CR2032) replacement

Follow instructions in this section to remove and install the CMOS battery (CR2032).

Remove the CMOS battery (CR2032)

Follow instructions in this section to remove the CMOS battery (CR2032).

About this task

S002

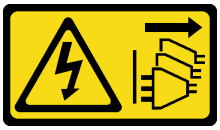

CAUTION:
The power-control button on the device and the power switch on the power supply do not turn off the electrical current supplied to the device. The device also might have more than one power cord. To remove all electrical current from the device, ensure that all power cords are disconnected from the power source.

S004



CAUTION:
When replacing the lithium battery, use only Lenovo specified part number or an equivalent type of battery recommended by the manufacturer. If your system has a module containing a lithium battery, replace it only with the same module type made by the same manufacturer. The battery contains lithium and can explode if not properly used, handled, or disposed of.

Do not:

- **Throw or immerse into water**
- **Heat to more than 100°C (212°F)**
- **Repair or disassemble**

Dispose of the battery as required by local ordinances or regulations.

S005



CAUTION:
The battery is a lithium ion battery. To avoid possible explosion, do not burn the battery. Exchange it only with the approved part. Recycle or discard the battery as instructed by local regulations.

Attention:

- Read "Installation Guidelines" on page 1 and "Safety inspection checklist" on page 2 to ensure that you work safely.
- Power off the server and peripheral devices and disconnect the power cords and all external cables. See "Power off the server" on page 6.
- If the server is in a rack, remove it from the rack. See "Remove the server from rack" on page 6.
- Remove any locking device that secures the server, such as a Kensington lock or a padlock.
- Place the server on its side with the cover up.

Procedure

Step 1. Make preparation for this task.

a. Remove the server cover. See "Remove the server cover" on page 118.

Attention: The heat sink and processor could be very hot. To avoid burning yourself, wait for a few minutes after turning off the server before you remove the server cover.

Step 2. Locate the CMOS battery on the system board. See "System-board connectors" in *User Guide* or *System Configuration Guide*.

Step 3. Remove the CMOS battery.

a. ❶ Press the battery clip in the direction as shown.

b. ❷ Carefully tilt and lift the CMOS battery out of the socket.

Note: Do not lift the battery with excessive force, as it may cause damages to the socket on the system board. Any damage to the socket may require replacing the system board.

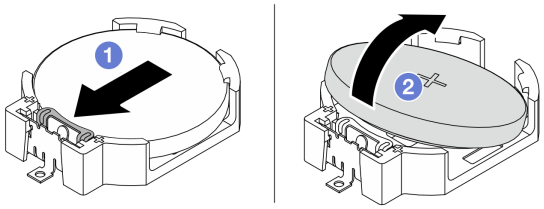

Figure 9. CMOS battery removal

After you finish

1. Install a replacement unit. See “Install the CMOS battery (CR2032)” on page 14.

   Note: Make sure to install the CMOS battery before powering on the server. Otherwise, it might cause system abnormality.
2. Dispose the component with compliance to local regulations.

Demo video

https://www.youtube.com/watch?v=neJ1StAcu08

Install the CMOS battery (CR2032)

Follow instructions in this section to install the CMOS battery (CR2032).

About this task

S002

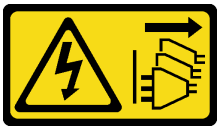

CAUTION:
The power-control button on the device and the power switch on the power supply do not turn off the electrical current supplied to the device. The device also might have more than one power cord. To remove all electrical current from the device, ensure that all power cords are disconnected from the power source.

S004



CAUTION:
When replacing the lithium battery, use only Lenovo specified part number or an equivalent type of battery recommended by the manufacturer. If your system has a module containing a lithium battery, replace it only with the same module type made by the same manufacturer. The battery contains lithium and can explode if not properly used, handled, or disposed of.

Do not:

- **Throw or immerse into water**
- **Heat to more than 100°C (212°F)**
- **Repair or disassemble**

Dispose of the battery as required by local ordinances or regulations.

S005



CAUTION:
The battery is a lithium ion battery. To avoid possible explosion, do not burn the battery. Exchange it only with the approved part. Recycle or discard the battery as instructed by local regulations.

Attention:

- Read “Installation Guidelines” on page 1 and “Safety inspection checklist” on page 2 to ensure that you work safely.
- Touch the static-protective package that contains the component to any unpainted metal surface on the server; then, remove it from the package and place it on a static-protective surface.

The following notes describe information that you must consider when replacing the battery.

- When replacing the CMOS battery, you must replace it with another CMOS battery of the same type from the same manufacturer.
- After replacing the CMOS battery, make sure to reconfigure the server and reset system date and time.
- To avoid possible danger, make sure to read and follow the safety statements.
- Lenovo has designed this product with your safety in mind. The CMOS battery must be handled correctly to avoid possible danger. If you install the CMOS battery, do adhere to the following instructions.

  Note: In the U. S., call 1-800-IBM-4333 for information about battery disposal.
- If you replace the original CMOS battery with a heavy-metal battery or a battery with heavy-metal components, be aware of the following environmental consideration. Batteries and accumulators that contain heavy metals must not be disposed of along with normal domestic waste. They should be taken back free of charge by for recycle or proper disposal by the manufacturer, distributor, or representatives.

Procedure

Step 1. Follow any special handling and installation instructions that come with the CMOS battery.

Step 2. Locate the CMOS battery socket on the system board. See “System-board connectors” in *User Guide* or *System Configuration Guide*.

Step 3. Locate the CMOS battery on the system board. See “System-board connectors” in *User Guide* or *System Configuration Guide*.

Step 4. Install the CMOS battery.

a. ❶ Insert the CMOS battery into the socket, with positive (+) side facing up.

b. ❷ Press the battery straight down until it clicks in place.

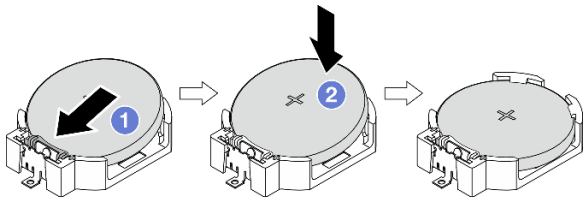

Figure 10. CMOS battery installation

After you finish

1. Complete the parts replacement. See “Complete the parts replacement” on page 126.
2. Reconfigure the server and reset the system date and time.

Demo video

https://www.youtube.com/watch?v=xx7kzwokN6o

Drive and drive cage replacement

Follow instructions in this section to remove and install a drive or a drive cage.

Note: For drive bay locations, see “Side view” in *User Guide* or *System Configuration Guide*.

Simple-swap drive and drive cage replacement (bay 0-1)

Follow instructions in this section to remove and install a simple-swap drive and drive cage from and into bay 0 or bay 1.

Remove a simple-swap drive (bay 0-1)

Follow instructions in this section to remove a simple-swap drive from bay 0 or bay 1.

S002

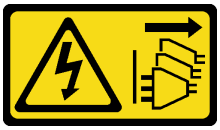

CAUTION:
The power-control button on the device and the power switch on the power supply do not turn off the electrical current supplied to the device. The device also might have more than one power cord. To remove all electrical current from the device, ensure that all power cords are disconnected from the power source.

About this task

Attention:

- Read “Installation Guidelines” on page 1 and “Safety inspection checklist” on page 2 to ensure that you work safely.
- Power off the server and peripheral devices and disconnect the power cords and all external cables. See “Power off the server” on page 6.

- If the server is in a rack, remove it from the rack. See “Remove the server from rack” on page 6.
- Remove any locking device that secures the server, such as a Kensington lock or a padlock.
- Place the server on its side with the cover up.

Procedure

Step 1. Make preparation for this task.

a. Remove the server cover. See “Remove the server cover” on page 118.

Attention: The heat sink and processor could be very hot. To avoid burning yourself, wait for a few minutes after turning off the server before you remove the server cover.

b. Disconnect the cables from the drive assembly.

Step 2. Remove the drive assembly.

Remove the 3.5-inch drive assembly from drive bay 0

Hold the retainer handle, and lift the drive assembly out of the drive bay.

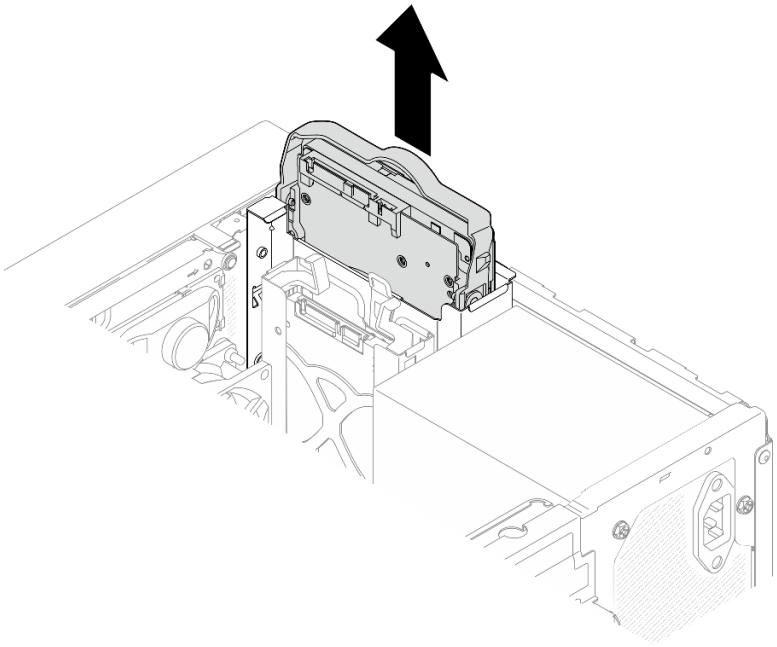

Figure 11. Removing drive assembly from drive bay 0

Remove the 2.5-inch drive assembly from drive bay 1

a. ❶ Pinch the retainer handles.

b. ❷ Lift the drive assembly out from the drive bay.

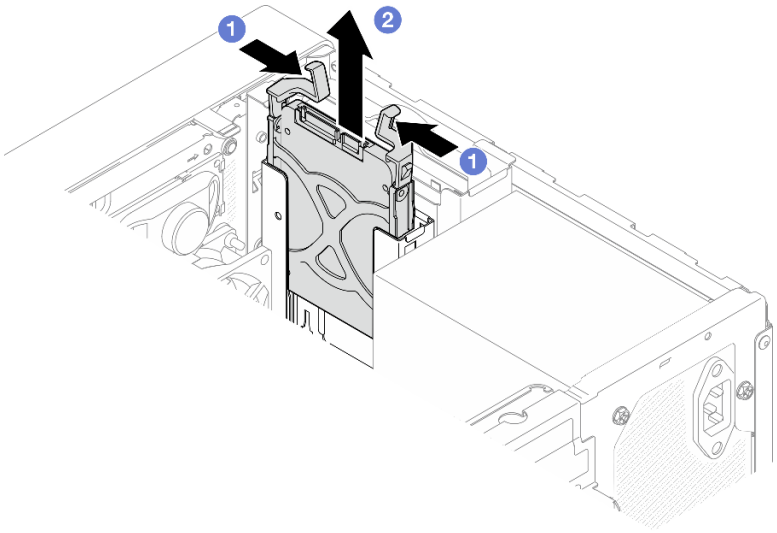

Figure 12. Removing drive assembly from drive bay 1

Step 3. If necessary, remove the drive from the retainer. Tear both sides of the retainer apart, and remove the drive.

Remove a 3.5-inch drive from the retainer

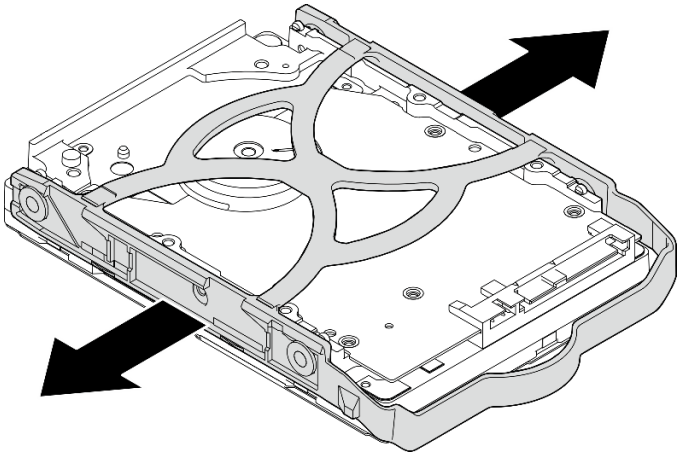

Figure 13. Removing a 3.5-inch drive from the retainer

Note: Depending on the configuration, the 3.5-inch drive may be the model in the illustration below.

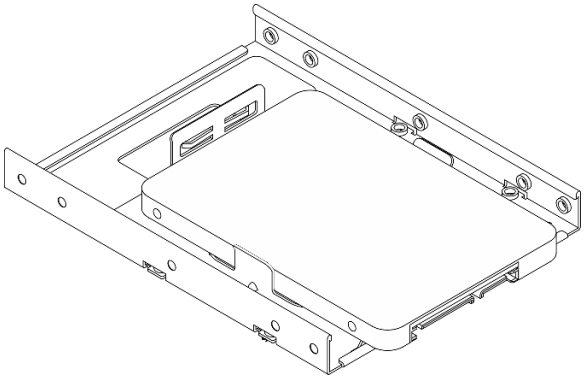

Remove a 2.5-inch drive from the retainer

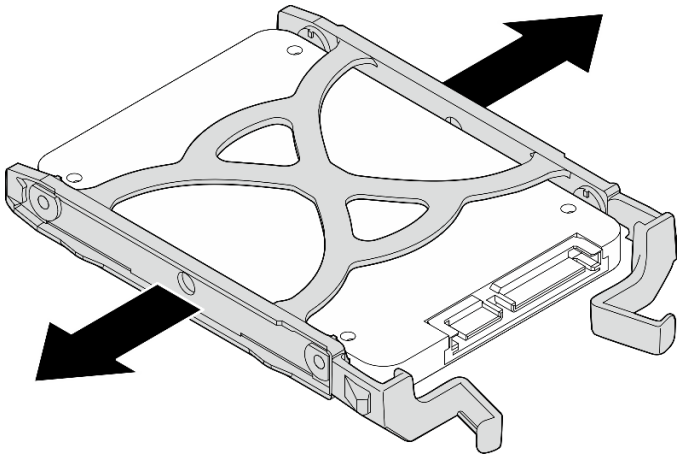

Figure 14. Removing a 2.5-inch drive from the retainer

After you finish

1. Install a replacement unit. See “Install a simple-swap drive (bay 0-1)” on page 20.
2. If you are instructed to return the component or optional device, follow all packaging instructions, and use any packaging materials for shipping that are supplied to you.

Demo video

https://www.youtube.com/watch?v=cjdW8yncXu8

Install a simple-swap drive (bay 0-1)

Follow instructions in this section to install a simple-swap drive to bay 0 or bay 1.

S002

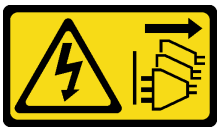

CAUTION:
The power-control button on the device and the power switch on the power supply do not turn off the electrical current supplied to the device. The device also might have more than one power cord. To remove all electrical current from the device, ensure that all power cords are disconnected from the power source.

About this task

Attention:

- Read “Installation Guidelines” on page 1 and “Safety inspection checklist” on page 2 to ensure that you work safely.
- Touch the static-protective package that contains the component to any unpainted metal surface on the server; then, remove it from the package and place it on a static-protective surface.
- Make sure the type of drives to be installed is supported. Following are the types supported:
  - 3.5-inch simple-swap hard-disk drive or solid-state drive in drive bay 0, drive bay 2 and drive bay 3.
  - 2.5-inch simple-swap solid-state drive in drive bay 1.

For a complete list of supported optional devices for the server, see https://serverproven.lenovo.com.

- If there are more than one drives to be installed, determine installation order based on the following rules:
  - Start with solid-state drives, and proceed with hard-disk drives.
  - When installing one 3.5-inch solid-state drive and one 3.5-inch hard-disk drive, install the solid-state drive in bay 0 and the hard-disk drive in bay 2.
  - Start with the drive with the lowest capacity.
  - Start with bay 0, proceed to bay 1, and bay 2, and then bay 3.

Note: Drives of different types and different capacities are allowed to be installed in one server, but not in the same RAID array. The drives in a single RAID array must be the same type and the same capacity.

Procedure

Step 1. Install a 3.5-inch or 2.5-inch drive to the retainer.

Note: To prevent from damaging the drive with static discharge, do not touch the circuit board on the bottom of the drive.

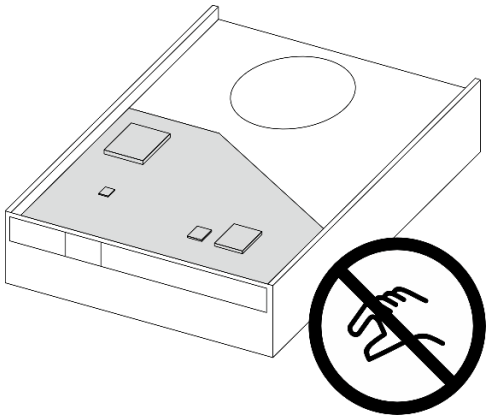

Figure 15. Circuit board on the drive

a. ❶ Slightly tear both sides of the retainer apart.

b. ❷ Align the four holes on the drive with the corresponding pins on the retainer; then, fit the drive into the retainer.

Note: The drive connectors should face the retainer handles.

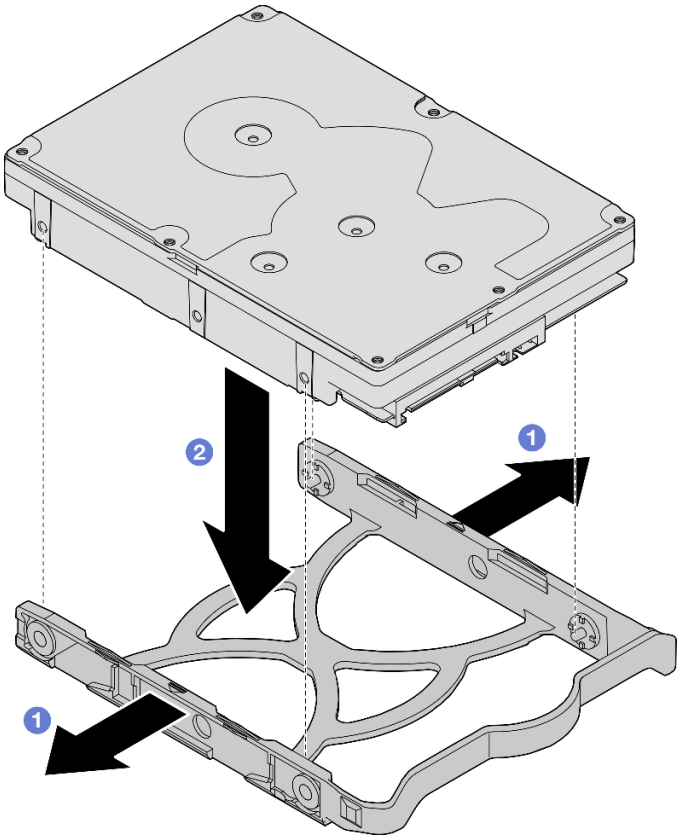

Figure 16. Installing a 3.5-inch drive into the retainer

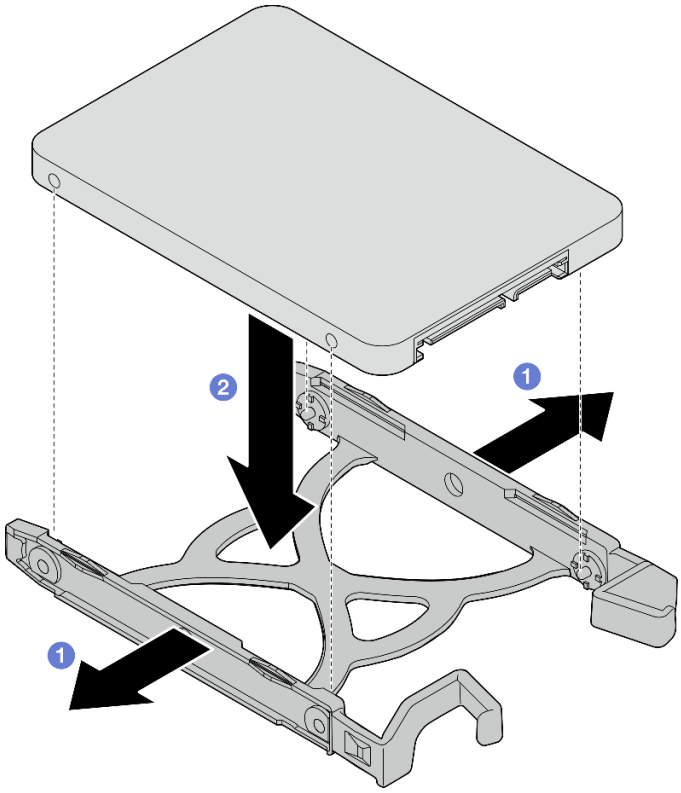

Figure 17. Installing a 2.5-inch drive into the retainer

Step 2. Face the retainer handles upward and push the drive assembly into the drive bay. Press the drive assembly firmly to ensure it is seated correctly.

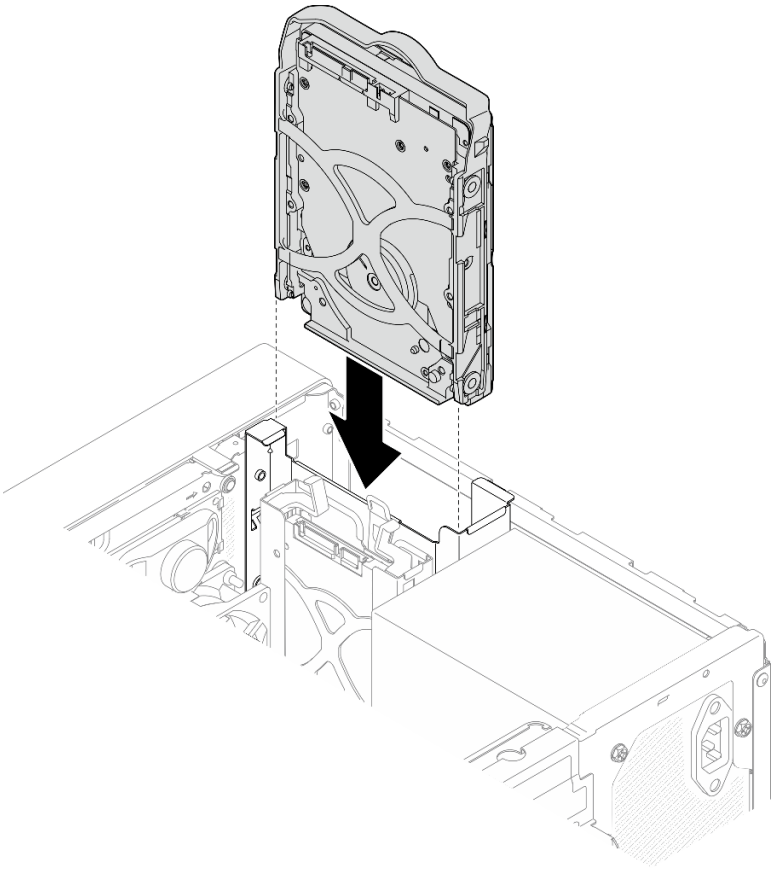

Figure 18. Installing the 3.5-inch drive assembly into drive bay 0

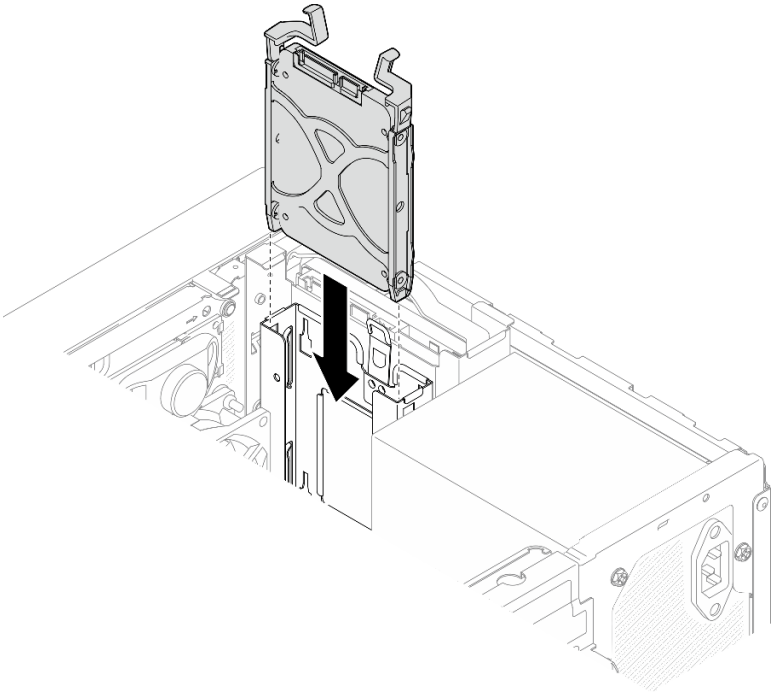

Figure 19. Installing the 2.5-inch drive assembly into drive bay 1

Step 3. Connect the signal and power cables to the drive assembly. See Chapter 2 “Internal cable routing” on page 129.

After you finish

1. Complete the parts replacement. See “Complete the parts replacement” on page 126.
2. Check the drive activity LED on the front of the server to verify if the drives are operating correctly. See “Front view” in *User Guide* or *System Configuration Guide*.
3. Use the Lenovo XClarity Provisioning Manager Lite to configure the RAID if necessary. For more information, see https://pubs.lenovo.com/lxpm-lite/RAID_setup.

Demo video

https://www.youtube.com/watch?v=kjNsDKpZd6g

Remove the drive cage (bay 0-1)

Follow instructions in this section to remove the bay 0 drive cage or bay 1 drive cage.

S002



CAUTION:
The power-control button on the device and the power switch on the power supply do not turn off the electrical current supplied to the device. The device also might have more than one power cord. To remove all electrical current from the device, ensure that all power cords are disconnected from the power source.

About this task

Attention:

- Read “Installation Guidelines” on page 1 and “Safety inspection checklist” on page 2 to ensure that you work safely.
- Power off the server and peripheral devices and disconnect the power cords and all external cables. See “Power off the server” on page 6.
- If the server is in a rack, remove it from the rack. See “Remove the server from rack” on page 6.
- Remove any locking device that secures the server, such as a Kensington lock or a padlock.
- Place the server on its side with the cover up.

Procedure

Step 1. Make preparation for this task.

a. Remove the server cover. See “Remove the server cover” on page 118.

Attention: The heat sink and processor could be very hot. To avoid burning yourself, wait for a few minutes after turning off the server before you remove the server cover.

b. Remove the simple-swap drive from drive bay 0 or drive bay 1. See “Remove a simple-swap drive (bay 0-1)” on page 16.

Step 2. Remove the bay 1 drive cage.

Note: Remove the bay 1 drive cage first; then, proceed to remove the bay 0 drive cage.

a. 1 Slightly pull out the latch on the bay 1 drive cage to release it from the bay 0 drive cage.

b. 2 Pull the bay 1 drive cage out from the chassis.

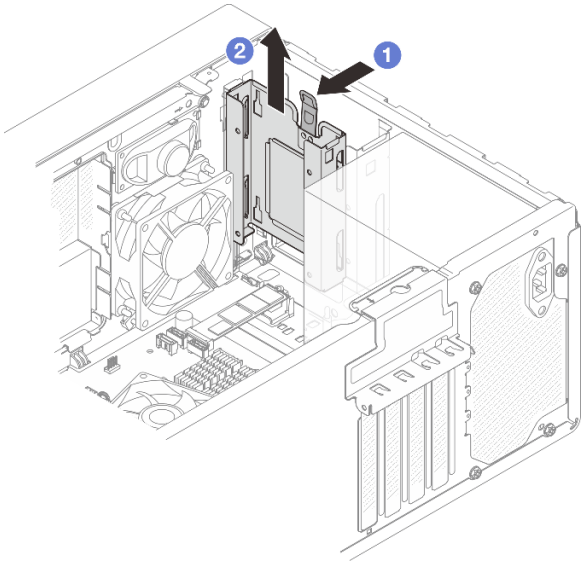

Figure 20. Removing the bay 1 drive cage

Step 3. Remove the front bezel.

a. 1 Release the three plastic tabs on the front bezel.

b. 2 Rotate the front bezel to remove it from the chassis.

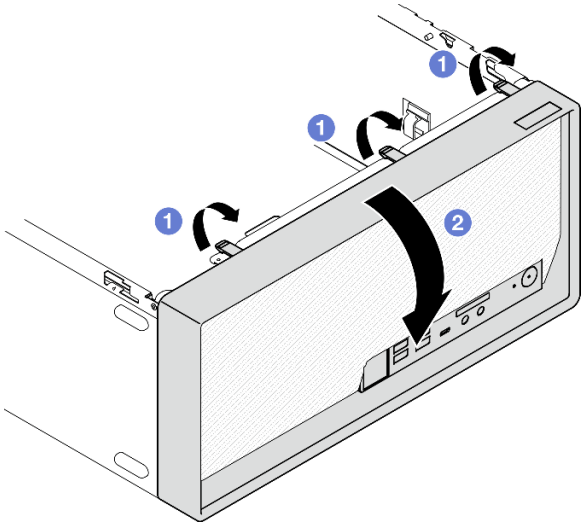

Figure 21. Removing the front bezel

Step 4. Remove the bay 0 drive cage.

a. 1 From the outside of the chassis, remove the screw that secures the bay 0 drive cage to the chassis.

b. 2 From the inside of the chassis, remove the screw that secures the bay 0 drive cage to the chassis.

c. 3 Pull the bay 0 drive cage out from the chassis.

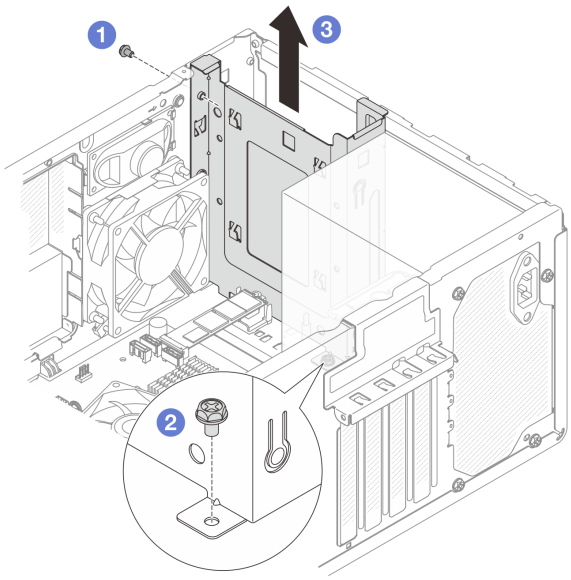

Figure 22. Removing the bay 0 drive cage

After you finish

1. Install a replacement unit. See "Install the drive cage (bay 0-1)" on page 27.
2. If you are instructed to return the component or optional device, follow all packaging instructions, and use any packaging materials for shipping that are supplied to you.

Demo video

https://www.youtube.com/watch?v=cjdW8yncXu8

Install the drive cage (bay 0-1)

Follow instructions in this section to install the bay 0 drive cage or bay 1 drive cage.

About this task

S002



CAUTION:
The power-control button on the device and the power switch on the power supply do not turn off the electrical current supplied to the device. The device also might have more than one power cord. To remove all electrical current from the device, ensure that all power cords are disconnected from the power source.

Attention:

- Read "Installation Guidelines" on page 1 and "Safety inspection checklist" on page 2 to ensure that you work safely.

- Touch the static-protective package that contains the component to any unpainted metal surface on the server; then, remove it from the package and place it on a static-protective surface.

Procedure

Note: Install the bay 0 drive cage first; then, proceed to install the bay 1 drive cage.

Step 1. Install the bay 0 drive cage.

a. 1 Align the bay 0 drive cage to the slots on chassis; then, install it into the chassis. Make sure the drive cage is seated correctly in the chassis.

b. 2 From the inside of the chassis, fasten the screw that secures the bay 0 drive cage to the chassis.

c. 3 From the outside of the chassis, fasten the screw that secures the bay 0 drive cage to the chassis.

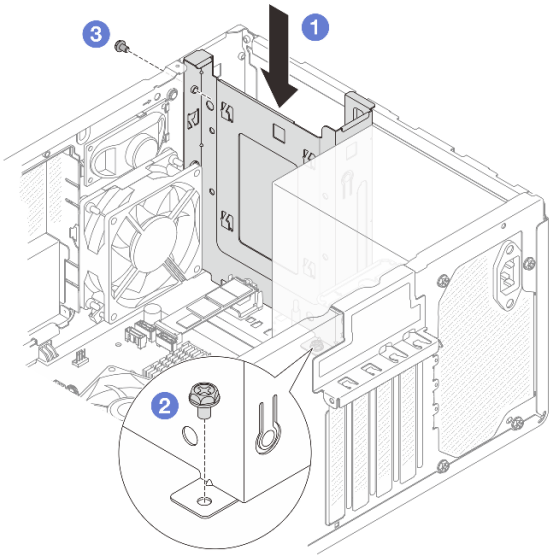

Figure 23. Installing the bay 0 drive cage

Step 2. Install the front bezel.

a. 1 Insert the three plastic tabs on the bottom of the front bezel with the corresponding slots on the front of the chassis.

b. 2 Pivot the front bezel towards the chassis until it snaps into place.

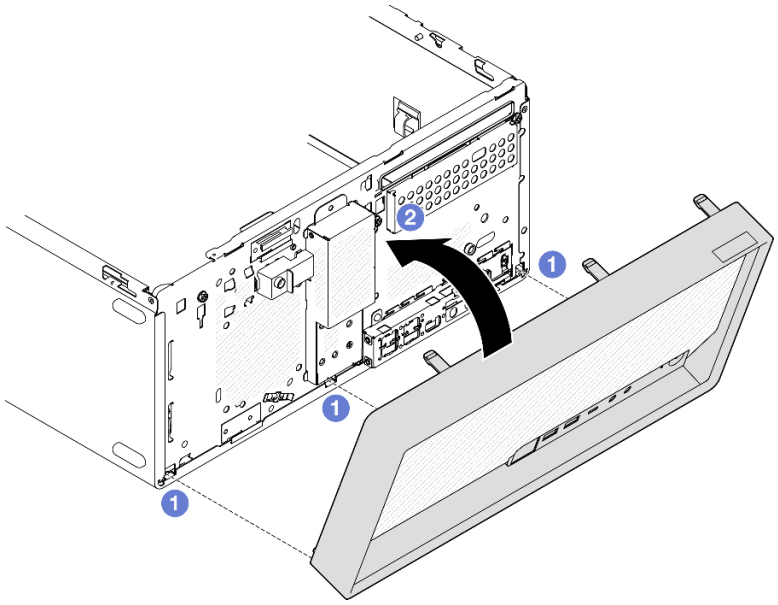

Figure 24. Installing the front bezel

Step 3. Install the bay 1 drive cage.

Align the four hooks on both drive cages, and attach bay 1 drive cage to bay 0 drive cage; then, slide the bay 1 drive cage downward until the four hooks on both drive cages are fully engaged. Make sure the latch on the bay 1 drive cage is also engaged with the hook on the bay 0 drive cage.

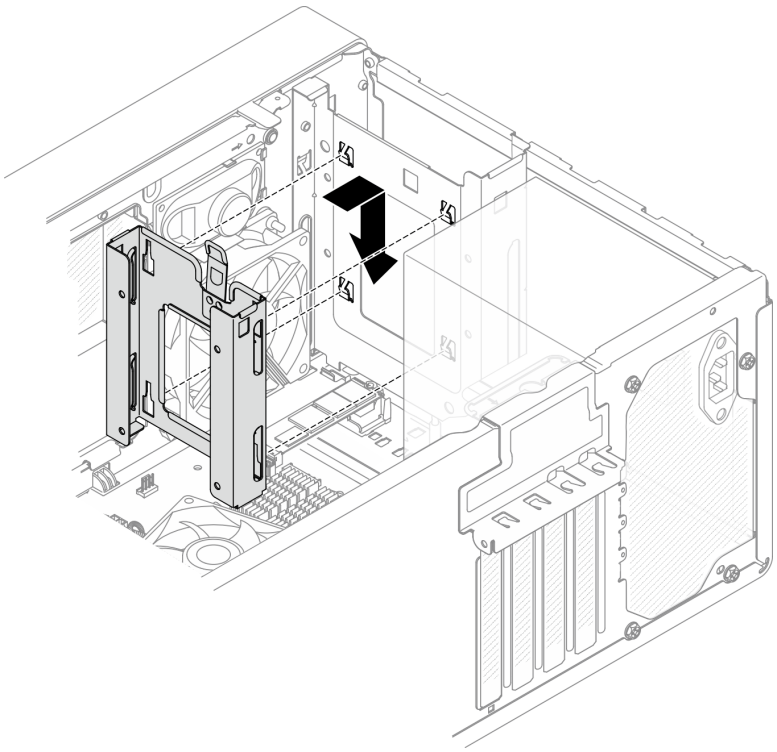

Figure 25. Installing the bay 1 drive cage

After you finish

1. Install simple-swap drives if necessary. See “Install a simple-swap drive (bay 0-1)” on page 20.
2. Complete the parts replacement. See “Complete the parts replacement” on page 126.

Demo video

https://www.youtube.com/watch?v=kjNsDKpZd6g

Simple-swap drive and drive cage replacement (bay 2)

Follow instructions in this section to remove and install a simple-swap drive or drive cage from and into bay 2.

Note: This topic uses the ODD+bay 2 drive cage assembly as an example for illustration. The procedure for bay 2+bay 3 drive cage assembly is similar. For details, see “Simple-swap drive and drive cage replacement (bay 3)” on page 40.

Remove a simple-swap drive (bay 2)

Follow instructions in this section to remove a simple-swap drive from bay 2.

S002

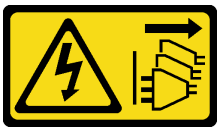

CAUTION:
The power-control button on the device and the power switch on the power supply do not turn off the electrical current supplied to the device. The device also might have more than one power cord. To remove all electrical current from the device, ensure that all power cords are disconnected from the power source.

About this task

Attention:

- Read “Installation Guidelines” on page 1 and “Safety inspection checklist” on page 2 to ensure that you work safely.
- Power off the server and peripheral devices and disconnect the power cords and all external cables. See “Power off the server” on page 6.
- If the server is in a rack, remove it from the rack. See “Remove the server from rack” on page 6.
- Remove any locking device that secures the server, such as a Kensington lock or a padlock.
- Place the server on its side with the cover up.

Procedure

Step 1. Make preparation for this task.

a. Remove the server cover. See “Remove the server cover” on page 118.

Attention: The heat sink and processor could be very hot. To avoid burning yourself, wait for a few minutes after turning off the server before you remove the server cover.

b. If applicable, remove the optical drive. See “Remove an optical drive” on page 51.

c. If applicable, disconnect all the cables from the 3.5-inch drive assembly.

Step 2. Remove the ODD+bay 2 drive cage assembly from the chassis.

a. ❶ Rotate the handle on the optical drive cage.

b. ❷ Lift the drive cage assembly out from the chassis.

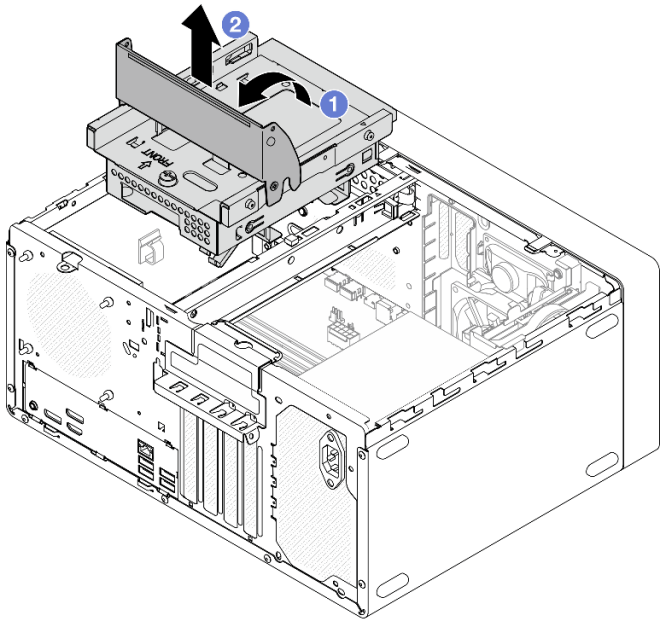

Figure 26. Removing the ODD+bay 2 drive cage assembly

Step 3. Remove the 3.5-inch drive.

a. ❶ Slide the drive retainer out from the drive cage.

b. ❷ Tear both sides of the retainer apart and remove the drive from the retainer.

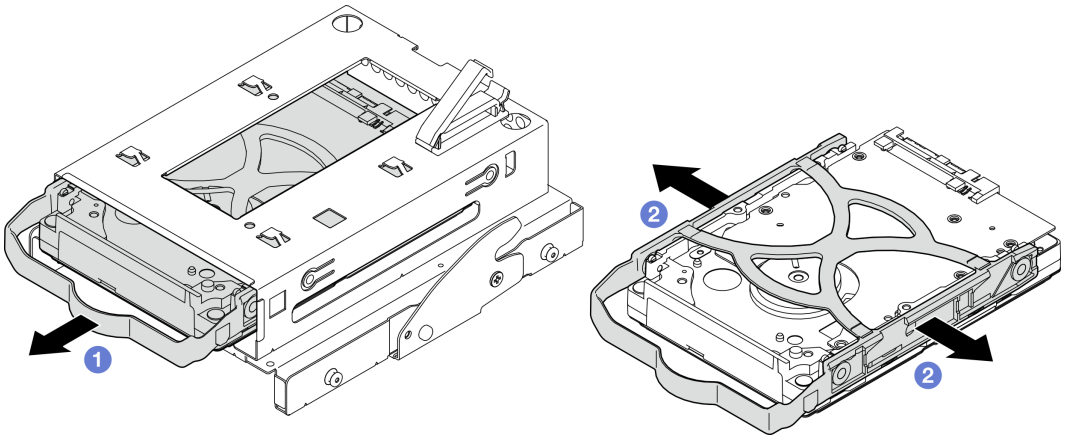

Figure 27. Removing the 3.5-inch drive

Note: Depending on the configuration, the 3.5-inch drive may be the model in the illustration below.

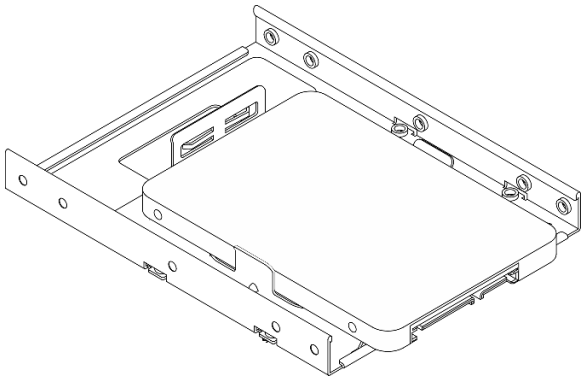

After you finish

1. Install a replacement unit. See “Install a simple-swap drive (bay 2)” on page 32.
2. If you are instructed to return the component or optional device, follow all packaging instructions, and use any packaging materials for shipping that are supplied to you.

Demo video

https://www.youtube.com/watch?v=EACGnzkNwh8

Install a simple-swap drive (bay 2)

Follow instructions in this section to install a simple-swap drive to bay 2.

S002

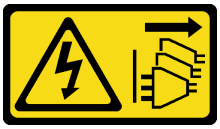

CAUTION:
The power-control button on the device and the power switch on the power supply do not turn off the electrical current supplied to the device. The device also might have more than one power cord. To remove all electrical current from the device, ensure that all power cords are disconnected from the power source.

About this task

Attention:

- Read “Installation Guidelines” on page 1 and “Safety inspection checklist” on page 2 to ensure that you work safely.
- Touch the static-protective package that contains the component to any unpainted metal surface on the server; then, remove it from the package and place it on a static-protective surface.
- Make sure the type of drives to be installed is supported. Following are the types supported:
  - 3.5-inch simple-swap hard-disk drive or solid-state drive in drive bay 0, drive bay 2 and drive bay 3.
  - 2.5-inch simple-swap solid-state drive in drive bay 1.

  For a complete list of supported optional devices for the server, see https://serverproven.lenovo.com.
- If there are more than one drives to be installed, determine installation order based on the following rules:
  - Start with solid-state drives, and proceed with hard-disk drives.

– When installing one 3.5-inch solid-state drive and one 3.5-inch hard-disk drive, install the solid-state drive in bay 0 and the hard-disk drive in bay 2.
– Start with the drive with the lowest capacity.
– Start with bay 0, proceed to bay 1, and bay 2, and then bay 3.

Note: Drives of different types and different capacities are allowed to be installed in one server, but not in the same RAID array. The drives in a single RAID array must be the same type and the same capacity.

Procedure

Step 1. Install a 3.5-inch drive to the drive cage.

Note: To prevent from damaging the drive with static discharge, do not touch the circuit board on the bottom of the drive.

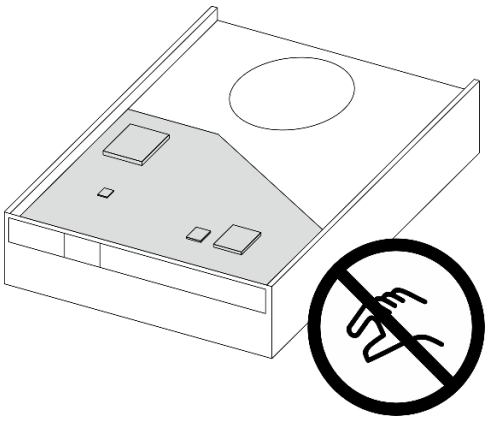

Figure 28. Circuit board on the drive

a. ❶ Slightly tear both sides of the retainer apart.

Attention: Position the drive connectors on the opposite side of the retainer handles.

b. ❷ Align the four holes on the drive with the corresponding pins on the retainer; then, fit the drive into the retainer.

c. ❸ Slide the drive into the drive cage.

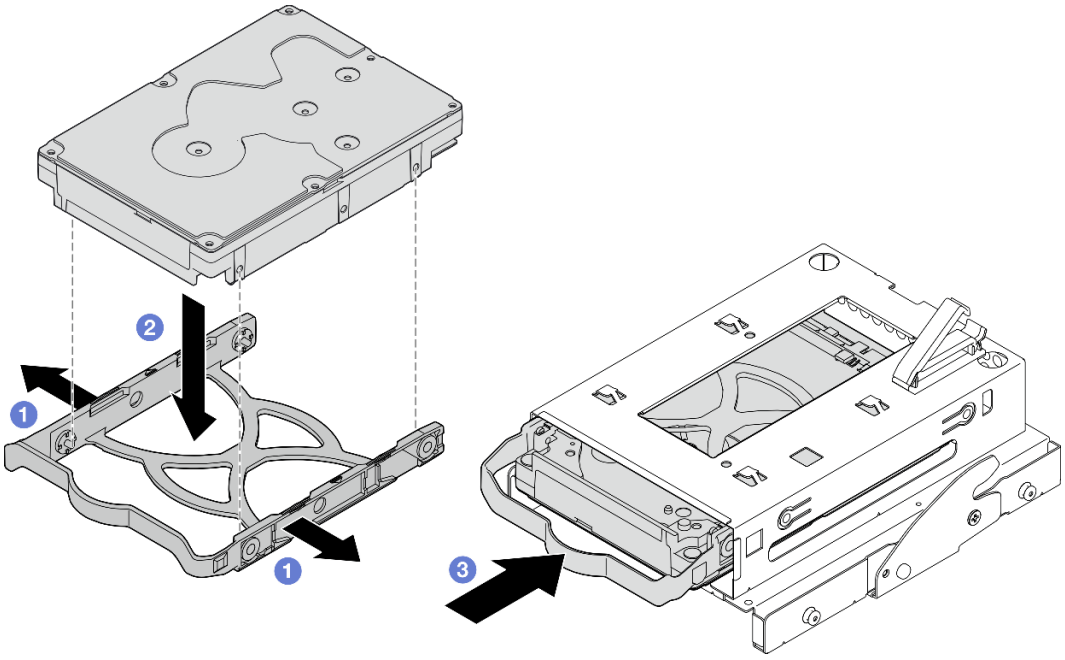

Figure 29. Installing a 3.5-inch drive to the drive cage

Attention: If you are installing a 3.5-inch drive as the model in the illustration below:

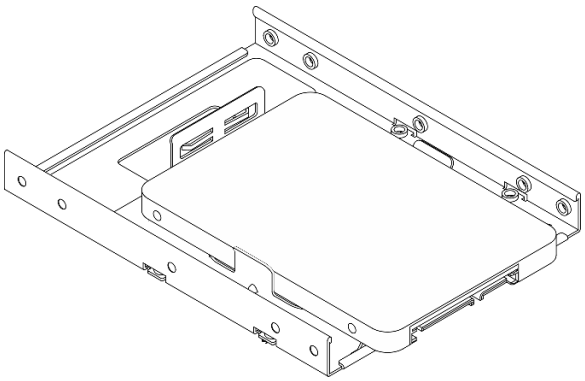

Make sure the screw holes that are nearest to the drive connector are **outside** of the drive retainer.

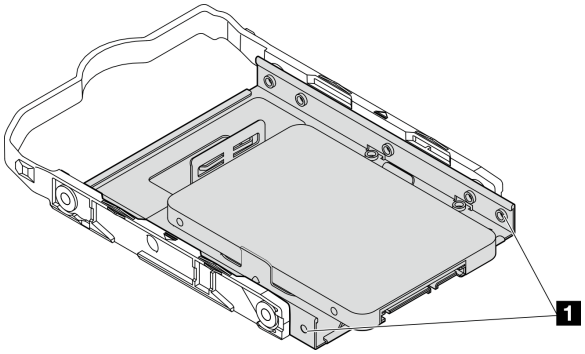

Figure 30. Drive screw hole placement on retainer

1 Screw holes nearest to the drive connector

Step 2. Install the ODD+bay 2 drive cage assembly.

a. 1 Align the four pins on the sides of the optical drive cage with the four slots on the chassis and cage bar; then, lower the drive cage assembly into the chassis.

b. 2 Ensure that the drive cage assembly is seated correctly; then, rotate the handle on the optical drive cage toward the front of the chassis to secure the drive cage assembly into place.

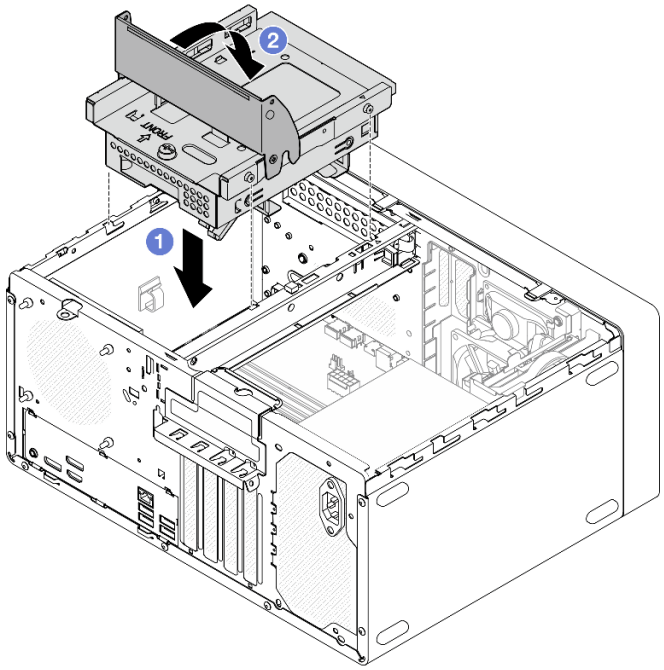

Figure 31. Installing the ODD+bay 2 drive cage assembly

After you finish

1. If applicable, install the optical drive. See “Install an optical drive” on page 54.
2. Connect the signal and power cables to the drive assembly. See Chapter 2 “Internal cable routing” on page 129.
3. Complete the parts replacement. See “Complete the parts replacement” on page 126.
4. Check the drive activity LED on the front of the server to verify if the drives are operating correctly. See “Front view” in *User Guide* or *System Configuration Guide*.
5. Use the Lenovo XClarity Provisioning Manager Lite to configure the RAID if necessary. For more information, see https://pubs.lenovo.com/lxpm-lite/RAID_setup.

Demo video

https://www.youtube.com/watch?v=lEUcD2qyAgo

Remove the drive cage (bay 2)

Follow instructions in this section to remove the bay 2 drive cage.

About this task

S002

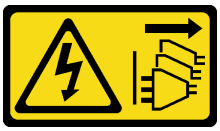

CAUTION:
The power-control button on the device and the power switch on the power supply do not turn off the electrical current supplied to the device. The device also might have more than one power cord. To remove all electrical current from the device, ensure that all power cords are disconnected from the power source.

Attention:

- Read "Installation Guidelines" on page 1 and "Safety inspection checklist" on page 2 to ensure that you work safely.
- Power off the server and peripheral devices and disconnect the power cords and all external cables. See "Power off the server" on page 6.
- If the server is in a rack, remove it from the rack. See "Remove the server from rack" on page 6.
- Remove any locking device that secures the server, such as a Kensington lock or a padlock.
- Place the server on its side with the cover up.

Procedure

Step 1. Make preparation for this task.

a. Remove the server cover. See "Remove the server cover" on page 118.

Attention: The heat sink and processor could be very hot. To avoid burning yourself, wait for a few minutes after turning off the server before you remove the server cover.

b. If applicable, remove the optical drive. See "Remove an optical drive" on page 51.

c. If applicable, disconnect all the cables from the 3.5-inch drive assembly.

Step 2. Remove the ODD+bay 2 drive cage assembly from the chassis.

a. ❶ Rotate the handle on the optical drive cage.

b. ❷ Lift the drive cage assembly out from the chassis.

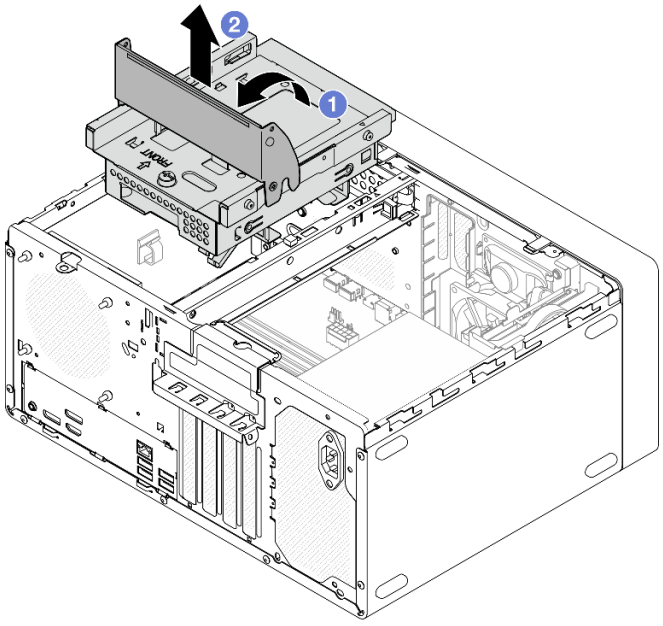

Figure 32. Removing the ODD+bay 2 drive cage assembly

Step 3. If applicable, remove the 3.5-inch drive from the bay 2 drive cage. See “Remove a simple-swap drive (bay 2)” on page 30.

Step 4. Remove the optical drive cage from the bay 2 drive cage.

a. ❶ Remove the screw that secures the optical drive cage to the bay 2 drive cage. Reserve the screw to be used for reinstalling the optical drive cage.

b. ❷ Slide the optical drive cage to separate it from the bay 2 drive cage.

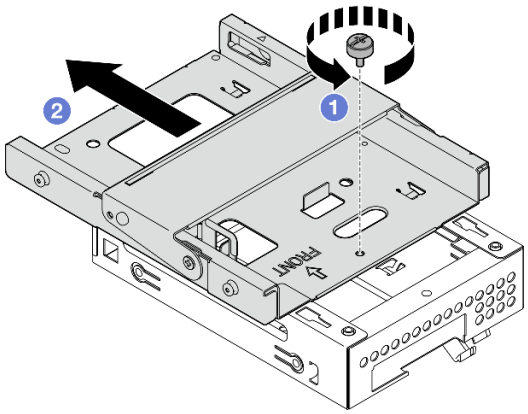

Figure 33. Removing the optical drive cage from the bay 2 drive cage

After you finish

1. Install a replacement unit. See “Install the drive cage (bay 2)” on page 38.
2. If you are instructed to return the component or optional device, follow all packaging instructions, and use any packaging materials for shipping that are supplied to you.

Demo video

https://www.youtube.com/watch?v=EACGnzkNwh8

Install the drive cage (bay 2)

Follow instructions in this section to install the bay 2 drive cage.

About this task

S002

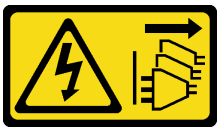

CAUTION:
The power-control button on the device and the power switch on the power supply do not turn off the electrical current supplied to the device. The device also might have more than one power cord. To remove all electrical current from the device, ensure that all power cords are disconnected from the power source.

Attention:

- Read “Installation Guidelines” on page 1 and “Safety inspection checklist” on page 2 to ensure that you work safely.
- Touch the static-protective package that contains the component to any unpainted metal surface on the server; then, remove it from the package and place it on a static-protective surface.

Procedure

Step 1. Make sure the cage bar is installed in the chassis. To install the cage bar, see “Install the server cover” on page 120.

Step 2. **(Optional)** Install the EMI shield included in the component packaging to the chassis.

Note: Installing the EMI shield is required when the original shield slot on the chassis is vacant.

a. (1) Insert the tabs on the left end of the EMI shield into the shield slot on the chassis.

b. (2) Push the EMI shield into the chassis until it snaps into place.

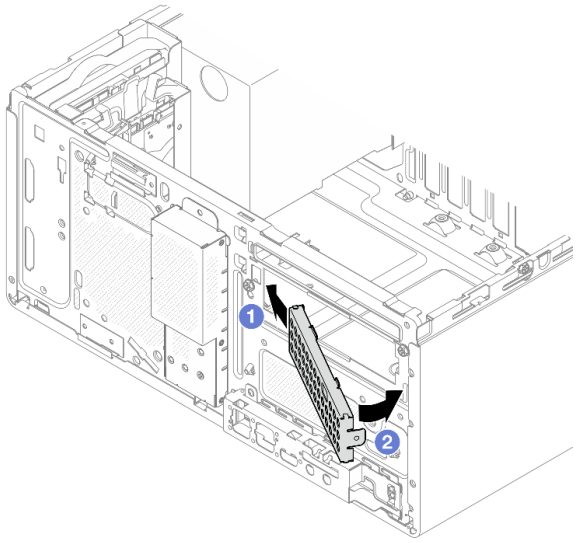

Figure 34. Installing the EMI shield

Step 3. Make sure there is no optical drive installed on the optical drive cage. Then, Install the optical drive cage to the bay 2 drive cage.

a. ❶ Align the four hooks on the optical drive cage with the corresponding hooks on the bay 2 drive cage; then, lower the optical drive cage onto the bay 2 drive cage, and slide the optical drive cage forward until it secures into place.

Note: Make sure the four hooks on both drive cages are fully engaged.

b. ❷ Fasten the screw to secure the two drive cages together.

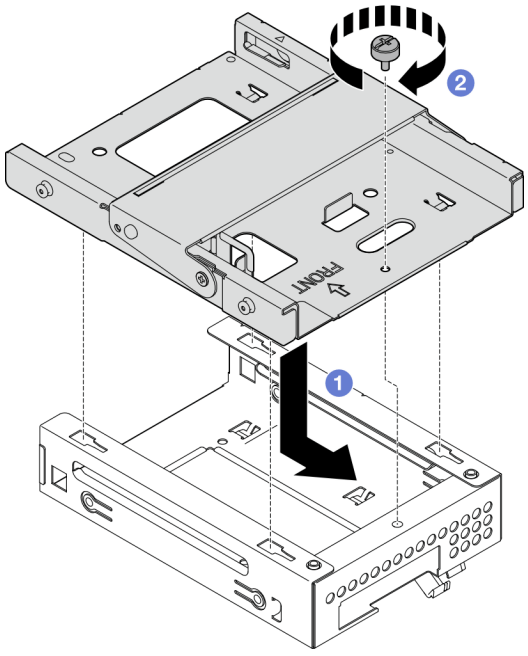

Figure 35. Installing the optical drive cage to the bay 2 drive cage

Step 4. If applicable, install the 3.5-inch drive to the bay 2 drive cage. See “Install a simple-swap drive (bay 2)” on page 32.

Step 5. Install the ODD+bay 2 drive cage assembly.

a. 1 Align the four pins on the sides of the optical drive cage with the four slots on the chassis and cage bar; then, lower the drive cage assembly into the chassis.

b. 2 Ensure that the drive cage assembly is seated correctly; then, rotate the handle on the optical drive cage toward the front of the chassis to secure the drive cage assembly into place.

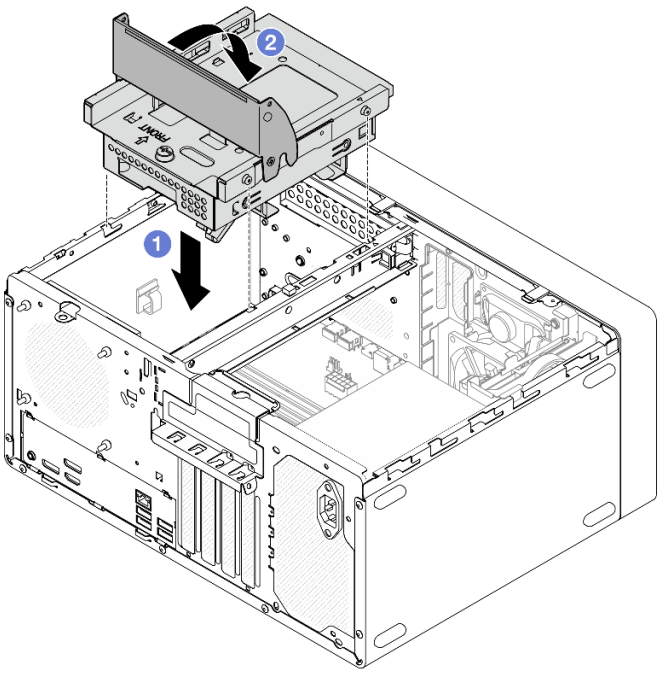

Figure 36. Installing the ODD+bay 2 drive cage assembly

After you finish

1. If applicable, install the optical drive. See "Install an optical drive" on page 54.
2. Connect the signal and power cables to the drive assembly. See Chapter 2 "Internal cable routing" on page 129.
3. Complete the parts replacement. See "Complete the parts replacement" on page 126.

Demo video

https://www.youtube.com/watch?v=lEUcD2qyAgo

Simple-swap drive and drive cage replacement (bay 3)

Follow instructions in this section to remove and install a simple-swap drive or drive cage from and into bay 3.

Remove a simple-swap drive (bay 3)

Follow instructions in this section to remove a simple-swap drive from bay 3.

S002



CAUTION:
The power-control button on the device and the power switch on the power supply do not turn off the electrical current supplied to the device. The device also might have more than one power cord. To remove all electrical current from the device, ensure that all power cords are disconnected from the power source.

About this task

Attention:

- Read “Installation Guidelines” on page 1 and “Safety inspection checklist” on page 2 to ensure that you work safely.
- Power off the server and peripheral devices and disconnect the power cords and all external cables. See “Power off the server” on page 6.
- If the server is in a rack, remove it from the rack. See “Remove the server from rack” on page 6.
- Remove any locking device that secures the server, such as a Kensington lock or a padlock.
- Place the server on its side with the cover up.

Procedure

Step 1. Make preparation for this task.

a. Remove the server cover. See “Remove the server cover” on page 118.

Attention: The heat sink and processor could be very hot. To avoid burning yourself, wait for a few minutes after turning off the server before you remove the server cover.

b. Disconnect the cables from the drive assembly.

Step 2. Remove the bay 2+bay 3 drive cage assembly from the chassis.

a. ❶ Rotate the handle on the bay 3 drive cage.

b. ❷ Lift the bay 2+bay 3 drive cage assembly out from the chassis.

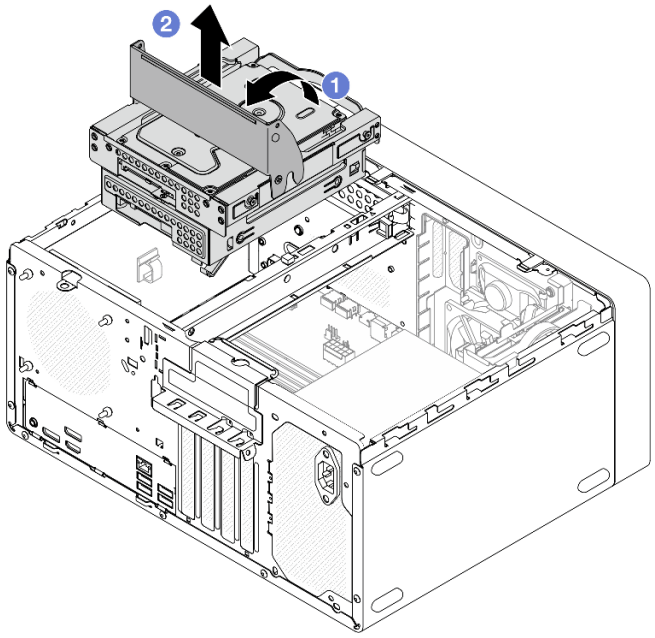

Figure 37. Removing the bay 2+bay 3 drive cage assembly

Step 3. Remove the 3.5-inch drive.

a. ❶ Slide the drive retainer out from the drive cage.

b. ❷ Tear both sides of the retainer apart and remove the drive from the retainer.

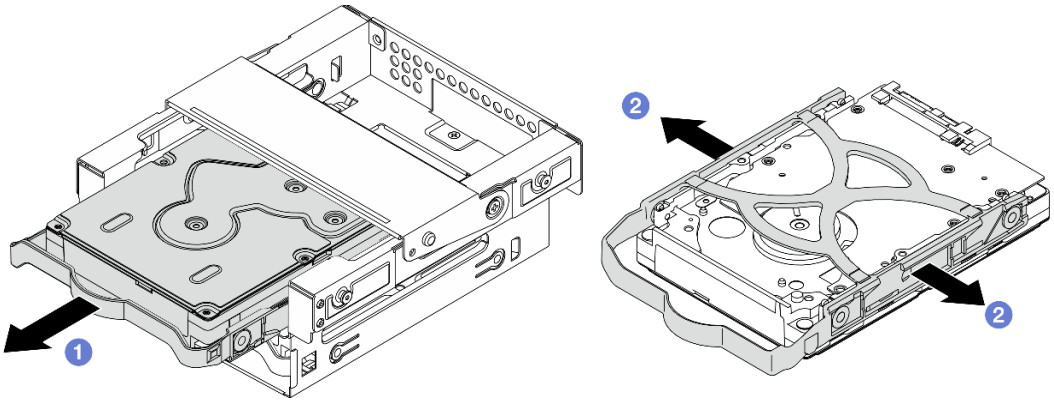

Figure 38. Removing the 3.5-inch drive

Note: Depending on the configuration, the 3.5-inch drive may be the model in the illustration below.

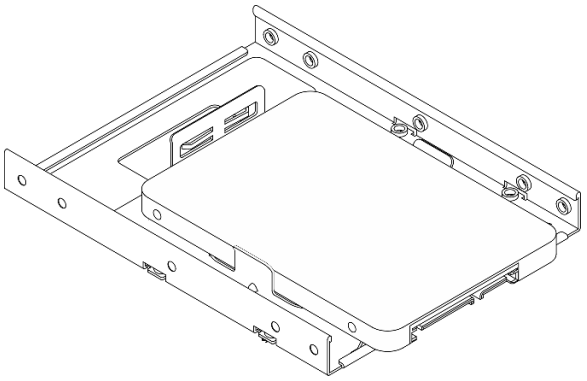

After you finish

1. Install a replacement unit. See “Install a simple-swap drive (bay 3)” on page 43.
2. If you are instructed to return the component or optional device, follow all packaging instructions, and use any packaging materials for shipping that are supplied to you.

Demo video

https://www.youtube.com/watch?v=EACGnzkNwh8

Install a simple-swap drive (bay 3)

Follow instructions in this section to install a simple-swap drive to bay 3.

S002



CAUTION:
The power-control button on the device and the power switch on the power supply do not turn off the electrical current supplied to the device. The device also might have more than one power cord. To remove all electrical current from the device, ensure that all power cords are disconnected from the power source.

About this task

Attention:

- Read “Installation Guidelines” on page 1 and “Safety inspection checklist” on page 2 to ensure that you work safely.
- Touch the static-protective package that contains the component to any unpainted metal surface on the server; then, remove it from the package and place it on a static-protective surface.
- Make sure the type of drives to be installed is supported. Following are the types supported:
  - 3.5-inch simple-swap hard-disk drive or solid-state drive in drive bay 0, drive bay 2 and drive bay 3.
  - 2.5-inch simple-swap solid-state drive in drive bay 1.

  For a complete list of supported optional devices for the server, see https://serverproven.lenovo.com.
- If there are more than one drives to be installed, determine installation order based on the following rules:
  - Start with solid-state drives, and proceed with hard-disk drives.

- When installing one 3.5-inch solid-state drive and one 3.5-inch hard-disk drive, install the solid-state drive in bay 0 and the hard-disk drive in bay 2.
- Start with the drive with the lowest capacity.
- Start with bay 0, proceed to bay 1, and bay 2, and then bay 3.

Note: Drives of different types and different capacities are allowed to be installed in one server, but not in the same RAID array. The drives in a single RAID array must be the same type and the same capacity.

Step 1. Install a 3.5-inch drive to the bay 3 drive cage.

Note: To prevent from damaging the drive with static discharge, do not touch the circuit board on the bottom of the drive.

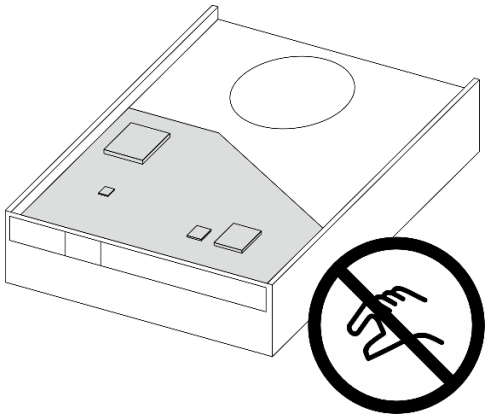

Figure 39. Circuit board on the drive

a. ❶ Slightly tear both sides of the retainer apart.

Attention: Position the drive connectors on the opposite side of the retainer handles.

b. ❷ Align the four holes on the drive with the corresponding pins on the retainer; then, fit the drive into the retainer.

c. ❸ Slide the drive into the drive cage.

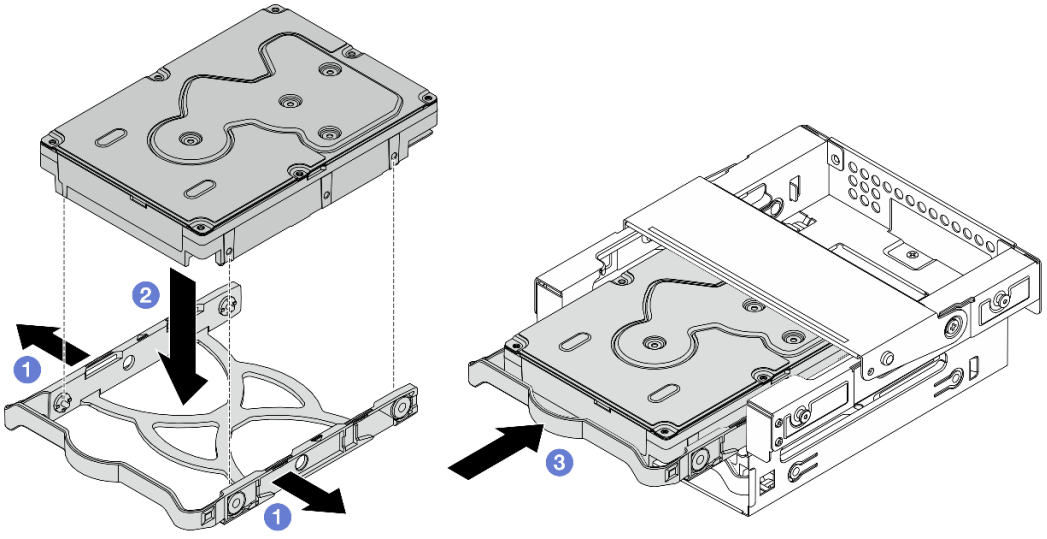

Figure 40. Installing a 3.5-inch drive to the bay 3 drive cage

Attention: If you are installing a 3.5-inch drive as the model in the illustration below:

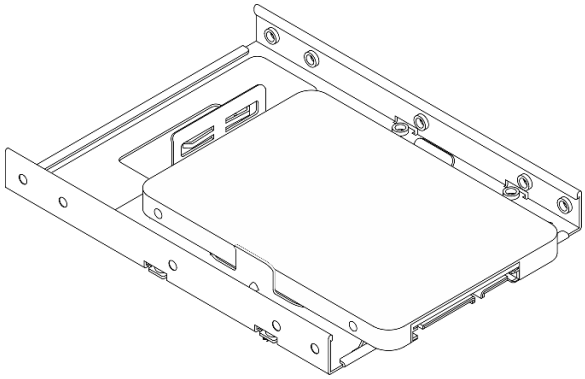

Make sure the screw holes that are nearest to the drive connector are **outside** of the drive retainer.

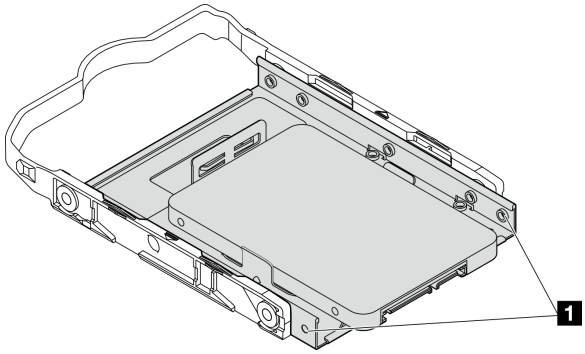

Figure 41. Drive screw hole placement on retainer

1 Screw holes nearest to the drive connector

Step 2. Install the bay 2+bay 3 drive cage assembly into the chassis.

a. 1 Align the four pins on the sides of the bay 3 drive cage with the four slots on the chassis and cage bar; then, lower the drive cage assembly into the chassis.

b. 2 Ensure that the drive cage assembly is seated correctly; then, rotate the handle on the bay 3 drive cage toward the front of the chassis to secure the drive cage assembly into place.

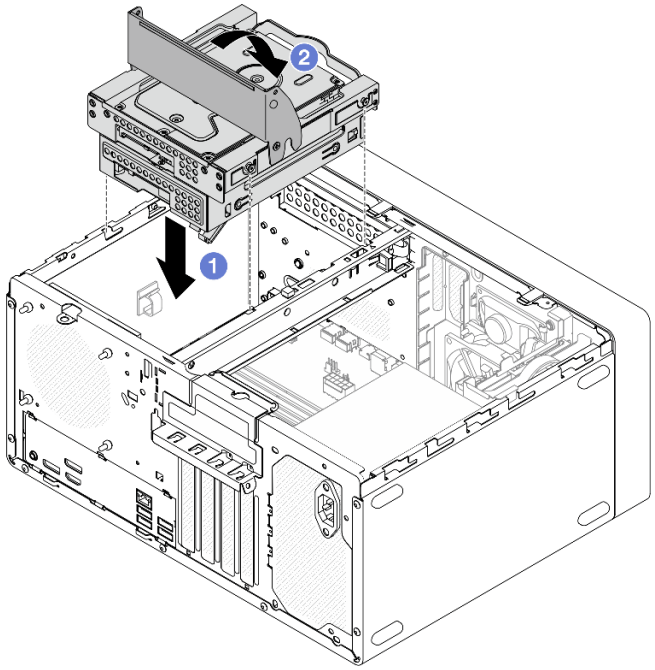

Figure 42. Installing the bay 2+bay 3 drive cage assembly

After you finish

1. Connect the signal and power cables to the drive assembly. See Chapter 2 “Internal cable routing” on page 129.
2. Complete the parts replacement. See “Complete the parts replacement” on page 126.
3. Check the drive activity LED on the front of the server to verify if the drives are operating correctly. See “Front view” in *User Guide* or *System Configuration Guide*.
4. Use the Lenovo XClarity Provisioning Manager Lite to configure the RAID if necessary. For more information, see https://pubs.lenovo.com/lxpm-lite/RAID_setup.

Demo video

https://www.youtube.com/watch?v=lEUcD2qyAgo

Remove the drive cage (bay 3)

Follow instructions in this section to remove the bay 3 drive cage.

About this task

S002

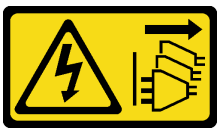

CAUTION:
The power-control button on the device and the power switch on the power supply do not turn off the electrical current supplied to the device. The device also might have more than one power cord. To

remove all electrical current from the device, ensure that all power cords are disconnected from the power source.

Attention:

- Read “Installation Guidelines” on page 1 and “Safety inspection checklist” on page 2 to ensure that you work safely.
- Power off the server and peripheral devices and disconnect the power cords and all external cables. See “Power off the server” on page 6.
- If the server is in a rack, remove it from the rack. See “Remove the server from rack” on page 6.
- Remove any locking device that secures the server, such as a Kensington lock or a padlock.
- Place the server on its side with the cover up.

Procedure

Step 1. Make preparation for this task.

a. Remove the server cover. See “Remove the server cover” on page 118.

Attention: The heat sink and processor could be very hot. To avoid burning yourself, wait for a few minutes after turning off the server before you remove the server cover.

b. Disconnect the cables from the drive assembly.

Step 2. Remove the bay 2+bay 3 drive cage assembly from the chassis.

a. ❶ Rotate the handle on the bay 3 drive cage.

b. ❷ Lift the bay 2+bay 3 drive cage assembly out from the chassis.

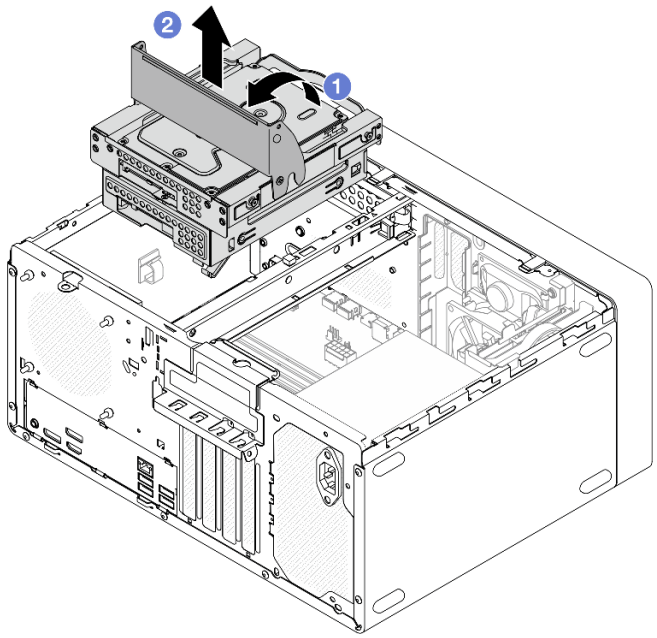

Figure 43. Removing the bay 2+bay 3 drive cage assembly

Step 3. Remove the 3.5-inch drive from the bay 3 drive cage. See “Remove a simple-swap drive (bay 3)” on page 40.

Step 4. Remove the bay 3 drive cage from the bay 2 drive cage.

a. 1 Remove the screw that secures the bay 3 drive cage to the bay 2 drive cage. Reserve the screw to be used for reinstalling the bay 3 drive cage.

b. 2 Slide the bay 3 drive cage to separate it from the bay 2 drive cage.

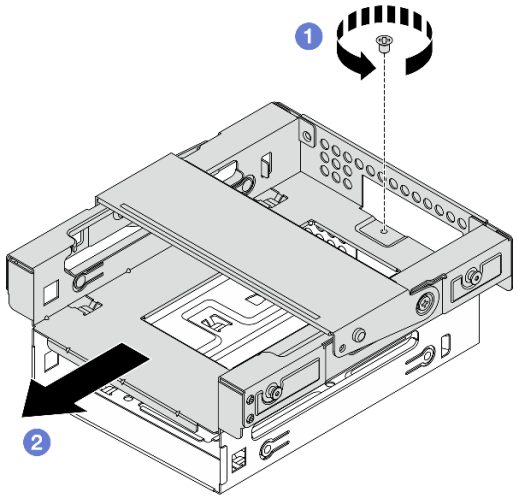

Figure 44. Removing the bay 3 drive cage

After you finish

1. Install a replacement unit. See "Install the drive cage (bay 3)" on page 48.
2. If you are instructed to return the component or optional device, follow all packaging instructions, and use any packaging materials for shipping that are supplied to you.

Demo video

https://www.youtube.com/watch?v=EACGnzkNwh8

Install the drive cage (bay 3)

Follow instructions in this section to install the bay 3 drive cage.

About this task

S002

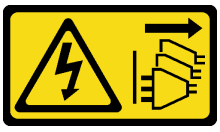

CAUTION:
The power-control button on the device and the power switch on the power supply do not turn off the electrical current supplied to the device. The device also might have more than one power cord. To remove all electrical current from the device, ensure that all power cords are disconnected from the power source.

Attention:

- Read "Installation Guidelines" on page 1 and "Safety inspection checklist" on page 2 to ensure that you work safely.

- Touch the static-protective package that contains the component to any unpainted metal surface on the server; then, remove it from the package and place it on a static-protective surface.

Procedure

Step 1. Make sure the cage bar is installed in the chassis. To install the cage bar, see "Install the server cover" on page 120.

Step 2. **(Optional)** Install the EMI shield included in the component packaging to the chassis.

Note: Installing the EMI shield is required when the original shield slot on the chassis is vacant.

a. ❶ Insert the tabs on the left end of the EMI shield into the shield slot on the chassis.

b. ❷ Push the EMI shield into the chassis until it snaps into place.

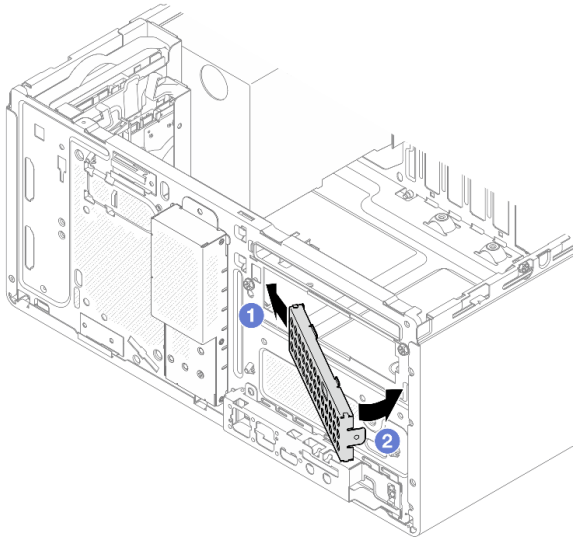

Figure 45. Installing the EMI shield

Step 3. Install the bay 3 drive cage to the bay 2 drive cage.

a. ❶ Align the four hooks on the bay 3 drive cage with the corresponding hooks on the bay 2 drive cage; then, lower the bay 3 drive cage onto the bay 2 drive cage, and slide the bay 3 drive cage forward until it secures into place.

Note: Make sure the four hooks on both drive cages are fully engaged.

b. ❷ Fasten the screw to secure the two drive cages together.

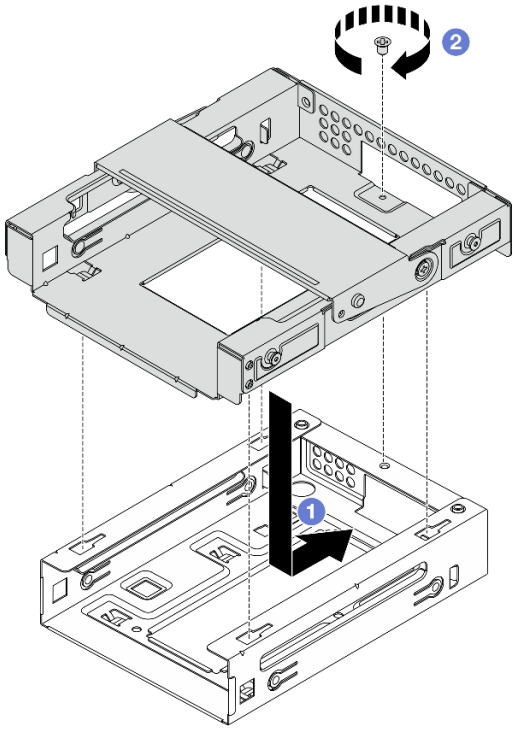

Figure 46. Installing the bay 3 drive cage to the bay 2 drive cage

Step 4. If applicable, install the 3.5-inch drive to the bay 3 drive cage. See “Install a simple-swap drive (bay 3)” on page 43.

Step 5. Install the bay 2+bay 3 drive cage assembly into the chassis.

a. 1 Align the four pins on the sides of the bay 3 drive cage with the four slots on the chassis and cage bar; then, lower the drive cage assembly into the chassis.

b. 2 Ensure that the drive cage assembly is seated correctly; then, rotate the handle on the bay 3 drive cage toward the front of the chassis to secure the drive cage assembly into place.

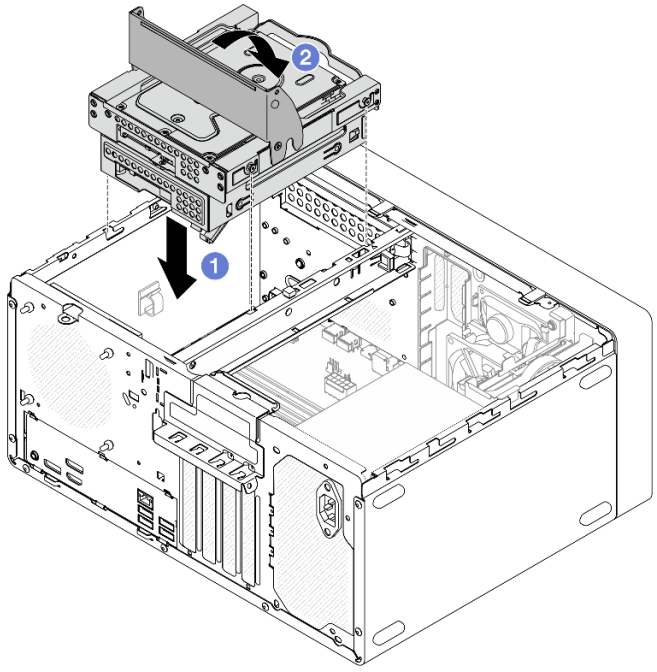

Figure 47. Installing the bay 2+bay 3 drive cage assembly

After you finish

1. Connect the signal and power cables to the drive assembly. See Chapter 2 “Internal cable routing” on page 129.
2. Complete the parts replacement. See “Complete the parts replacement” on page 126.

Demo video

https://www.youtube.com/watch?v=lEUcD2qyAgo

Optical drive and drive cage replacement

Follow instructions in this section to remove and install an optical drive and optical drive cage.

Remove an optical drive

Follow instructions in this section to remove an optical drive.

S002



CAUTION:
The power-control button on the device and the power switch on the power supply do not turn off the electrical current supplied to the device. The device also might have more than one power cord. To remove all electrical current from the device, ensure that all power cords are disconnected from the power source.

About this task

Attention:

- Read “Installation Guidelines” on page 1 and “Safety inspection checklist” on page 2 to ensure that you work safely.
- Power off the server and peripheral devices and disconnect the power cords and all external cables. See “Power off the server” on page 6.
- If the server is in a rack, remove it from the rack. See “Remove the server from rack” on page 6.
- Remove any locking device that secures the server, such as a Kensington lock or a padlock.
- Place the server on its side with the cover up.

Procedure

Step 1. Make preparation for this task.

a. Remove the server cover. See “Remove the server cover” on page 118.

Attention: The heat sink and processor could be very hot. To avoid burning yourself, wait for a few minutes after turning off the server before you remove the server cover.

b. Disconnect the cables from the optical drive.

Step 2. Remove the optical drive from the optical drive cage.

a. ❶ Press the latch on the optical drive to release it from the optical drive cage.

b. ❷ Slide out the optical drive from the chassis.

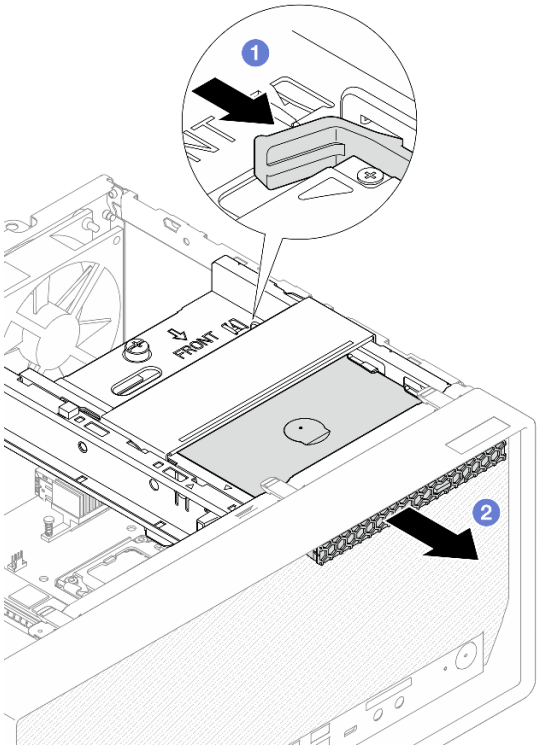

Figure 48. Removing the optical drive

Step 3. **(Optional)** Remove the optical drive retainer.

a. ❶ Pull out the retainer to disengage it from the optical drive.

b. ❷ Slide the retainer downward, and remove it from the optical drive.

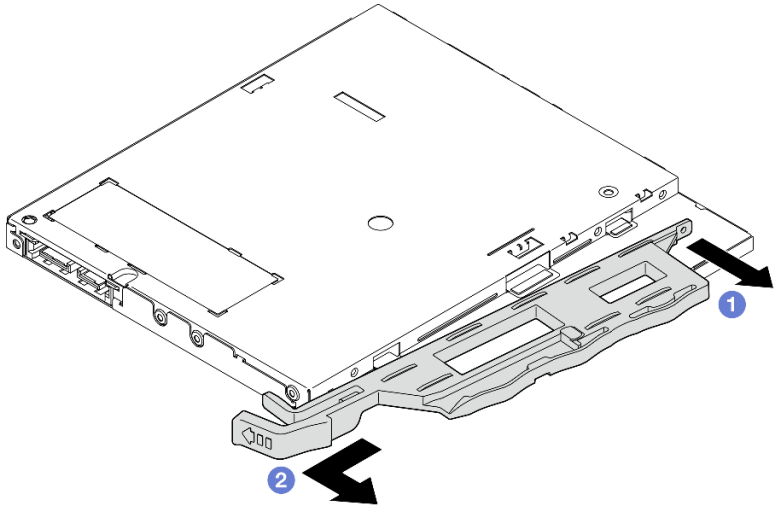

Figure 49. Removing the optical drive retainer

Step 4. **(Optional)** Pull the optical drive bezel away to remove it from the optical drive.

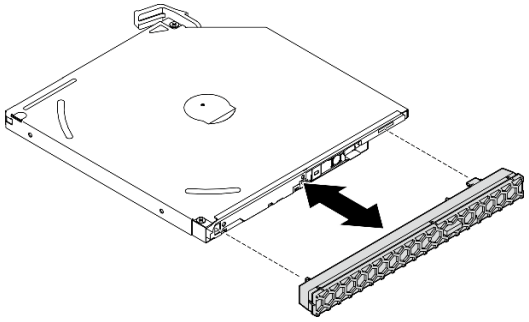

Figure 50. Removing the optical drive bezel

After you finish

1. Install a replacement unit. See “Install an optical drive” on page 54.
2. If no optical drive is to be installed, install the optical drive bay shield back to the front bezel.
   a. ❶ Engage the bottom of the shield to the opening on the front bezel.
   b. ❷ Pivot the shield towards the front bezel until it snaps into place.

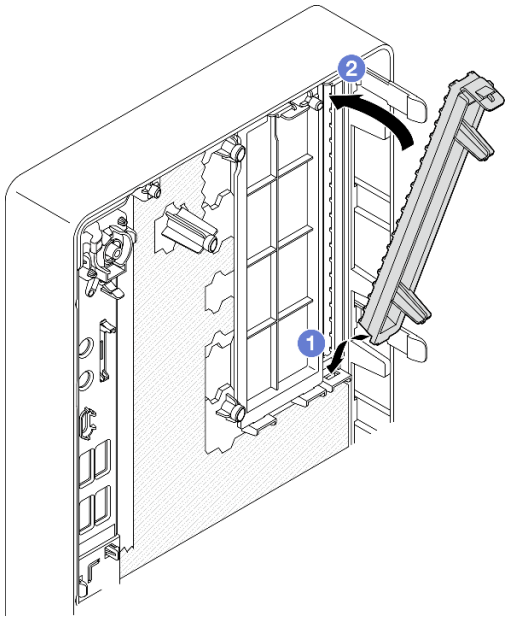

Figure 51. Installing the optical drive bay shield

3. If you are instructed to return the component or optional device, follow all packaging instructions, and use any packaging materials for shipping that are supplied to you.

Demo video

https://www.youtube.com/watch?v=0JIsxyH7u1Q

Install an optical drive

Follow instructions in this section to install an optical drive.

S002

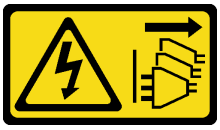

CAUTION:
The power-control button on the device and the power switch on the power supply do not turn off the electrical current supplied to the device. The device also might have more than one power cord. To remove all electrical current from the device, ensure that all power cords are disconnected from the power source.

S006



CAUTION:
When laser products (such as CD-ROMs, DVD drives, fiber optic devices, or transmitters) are installed, note the following:

- **Do not remove the covers. Removing the covers of the laser product could result in exposure to hazardous laser radiation. There are no serviceable parts inside the device.**
- **Use of controls or adjustments or performance of procedures other than those specified herein might result in hazardous radiation exposure.**

About this task

Attention:

- Read “Installation Guidelines” on page 1 and “Safety inspection checklist” on page 2 to ensure that you work safely.
- Touch the static-protective package that contains the component to any unpainted metal surface on the server; then, remove it from the package and place it on a static-protective surface.

Procedure

Step 1. If the optical drive bay shield is installed on the front bezel, remove it from the front bezel. To remove the front bezel, see “Remove the front bezel” on page 67.

a. ❶ Press the release tab on top of the drive bay shield.

b. ❶ Rotate the drive bay shield and remove it from the front bezel.

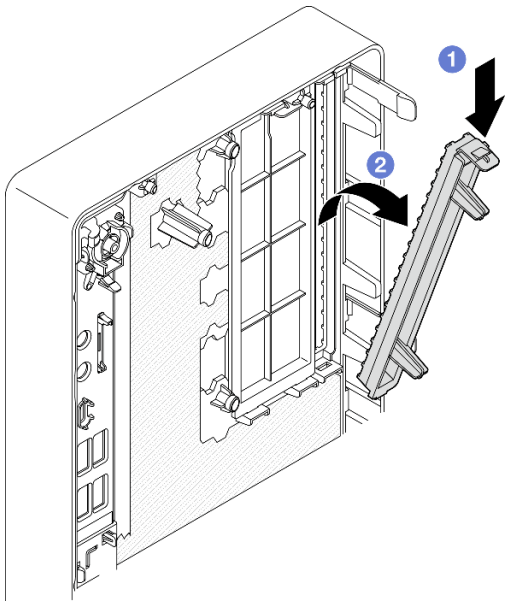

Figure 52. Removing the optical drive bay shield

Step 2. **(Optional)** Install the optical drive retainer.

a. 1 Align the pin on the bottom of the retainer and the corresponding slot on the optical drive; then, insert the pin into the slot.

b. 2 Insert the rest two pins on the retainer to the corresponding slots on the optical drive.

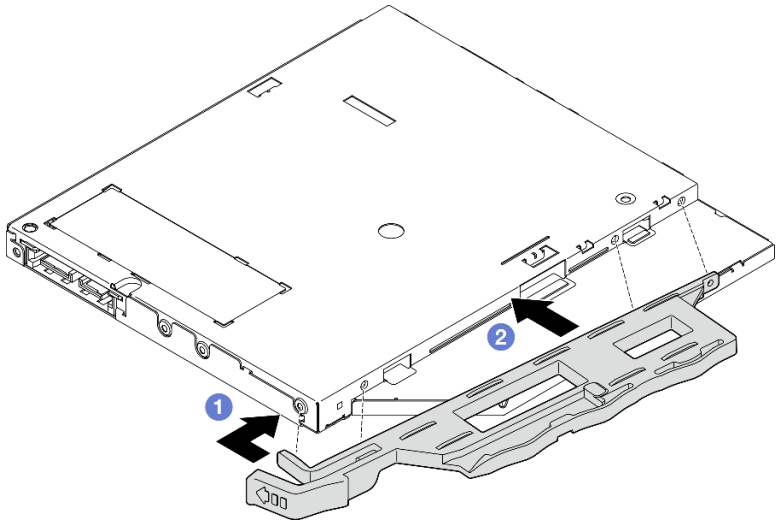

Figure 53. Installing the retainer to the optical drive

Step 3. **(Optional)** Align the optical drive bezel with the slots on the optical drive; then, insert the bezel into the optical drive.

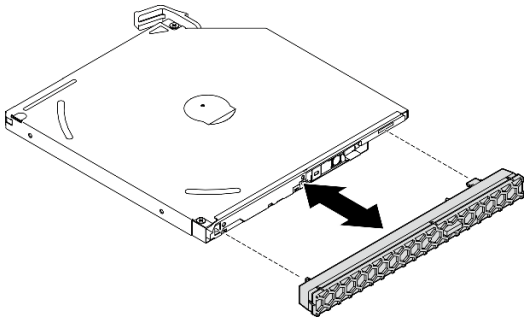

Figure 54. Installing the optical drive bezel

Step 4. Install the optical drive.

a. 1 From the outside of the chassis, insert the optical drive into the chassis.

b. 2 Slide the optical drive inward until the latch snaps into place.

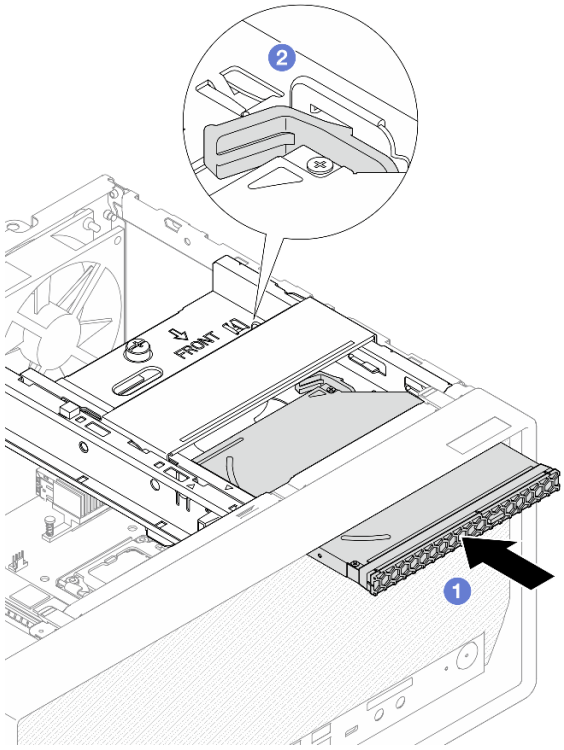

Figure 55. Installing the optical drive

After you finish

1. Connect the signal and power cables to the optical drive. See Chapter 2 “Internal cable routing” on page 129.
2. Complete the parts replacement. See “Complete the parts replacement” on page 126.

Demo video

https://www.youtube.com/watch?v=Ce8VkGaSFYA

Remove an optical drive cage

Follow instructions in this section to remove the optical drive cage.

S002

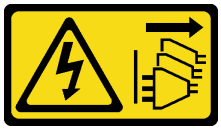

CAUTION:
The power-control button on the device and the power switch on the power supply do not turn off the electrical current supplied to the device. The device also might have more than one power cord. To remove all electrical current from the device, ensure that all power cords are disconnected from the power source.

About this task

Attention:

- Read “Installation Guidelines” on page 1 and “Safety inspection checklist” on page 2 to ensure that you work safely.
- Power off the server and peripheral devices and disconnect the power cords and all external cables. See “Power off the server” on page 6.
- If the server is in a rack, remove it from the rack. See “Remove the server from rack” on page 6.
- Remove any locking device that secures the server, such as a Kensington lock or a padlock.
- Place the server on its side with the cover up.

Procedure

Step 1. Make preparation for this task.

a. Remove the server cover. See “Remove the server cover” on page 118.

Attention: The heat sink and processor could be very hot. To avoid burning yourself, wait for a few minutes after turning off the server before you remove the server cover.

b. If applicable, remove the optical drive. See “Remove an optical drive” on page 51.

Step 2. If applicable, disconnect all the cables from the 3.5-inch drive assembly.

Step 3. Remove the ODD+bay 2 drive cage assembly from the chassis.

a. ❶ Rotate the handle on the optical drive cage.

b. ❷ Lift the drive cage assembly out from the chassis.

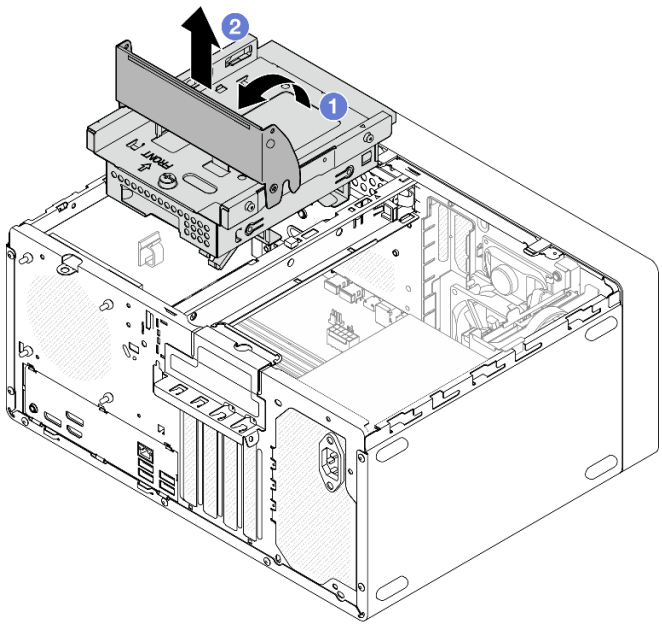

Figure 56. Removing the ODD+bay 2 drive cage assembly

Step 4. Remove the optical drive cage from the bay 2 drive cage.

a. ❶ Remove the screw that secures the optical drive cage to the bay 2 drive cage. Reserve the screw to be used for reinstalling the optical drive cage.

b. ❷ Slide the optical drive cage to separate it from the bay 2 drive cage.

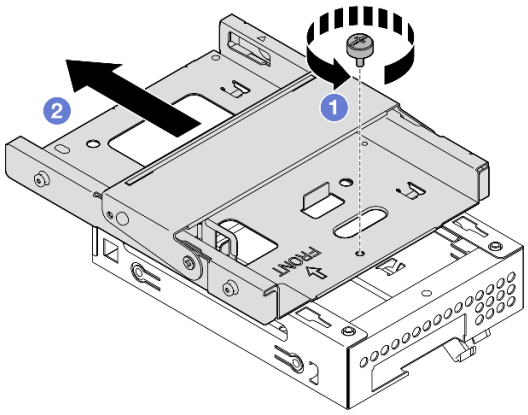

Figure 57. Removing the optical drive cage from the bay 2 drive cage

After you finish

1. Install a replacement unit. See “Install the optical drive cage” on page 59.
2. If you are instructed to return the component or optional device, follow all packaging instructions, and use any packaging materials for shipping that are supplied to you.

Demo video

https://www.youtube.com/watch?v=0JIsxyH7u1Q

Install the optical drive cage

Follow instructions in this section to install the optical drive cage.

S002

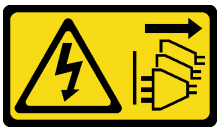

CAUTION:
The power-control button on the device and the power switch on the power supply do not turn off the electrical current supplied to the device. The device also might have more than one power cord. To remove all electrical current from the device, ensure that all power cords are disconnected from the power source.

S006



CAUTION:
When laser products (such as CD-ROMs, DVD drives, fiber optic devices, or transmitters) are installed, note the following:

- **Do not remove the covers. Removing the covers of the laser product could result in exposure to hazardous laser radiation. There are no serviceable parts inside the device.**
- **Use of controls or adjustments or performance of procedures other than those specified herein might result in hazardous radiation exposure.**

About this task

Attention:

- Read “Installation Guidelines” on page 1 and “Safety inspection checklist” on page 2 to ensure that you work safely.
- Touch the static-protective package that contains the component to any unpainted metal surface on the server; then, remove it from the package and place it on a static-protective surface.

Procedure

Step 1. Make sure the cage bar is installed in the chassis. To install the cage bar, see “Install the server cover” on page 120.

Step 2. **(Optional)** Install the EMI shield included in the component packaging to the chassis.

Note: Installing the EMI shield is required when the original shield slot on the chassis is vacant.

a. ❶ Insert the tabs on the left end of the EMI shield into the shield slot on the chassis.

b. ❷ Push the EMI shield into the chassis until it snaps into place.

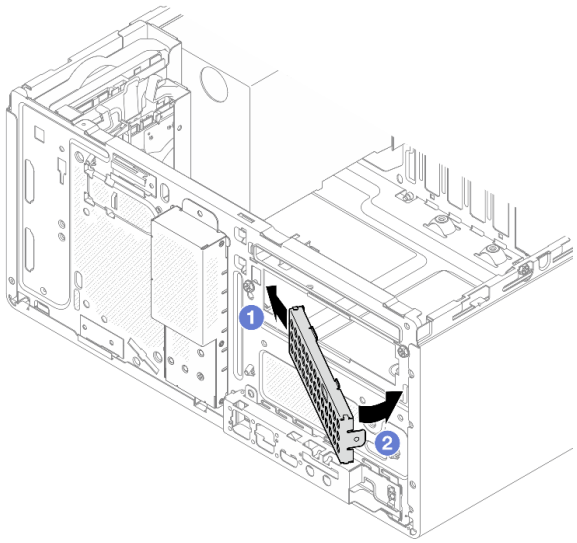

Figure 58. Installing the EMI shield

Step 3. Make sure there is no optical drive installed on the optical drive cage. Then, Install the optical drive cage to the bay 2 drive cage.

a. ❶ Align the four hooks on the optical drive cage with the corresponding hooks on the bay 2 drive cage; then, lower the optical drive cage onto the bay 2 drive cage, and slide the optical drive cage forward until it secures into place.

Note: Make sure the four hooks on both drive cages are fully engaged.

b. ❷ Fasten the screw to secure the two drive cages together.

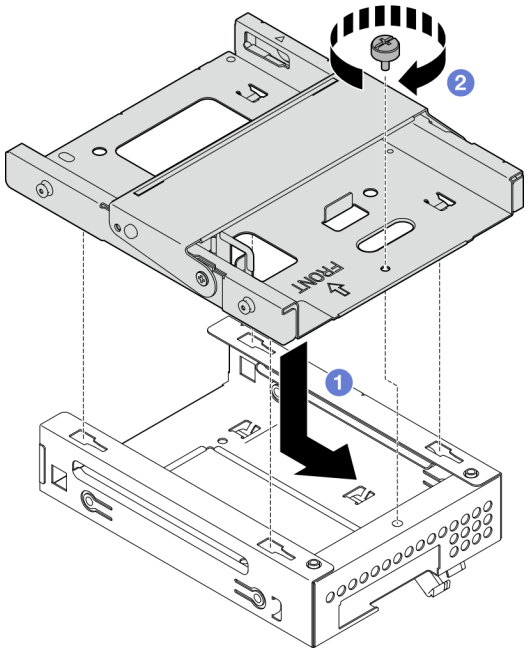

Figure 59. Installing the optical drive cage to the bay 2 drive cage

Step 4. If applicable, install the 3.5-inch drive to the bay 2 drive cage. See “Install a simple-swap drive (bay 2)” on page 32.

Step 5. Install the ODD+bay 2 drive cage assembly.

a. ❶ Align the four pins on the sides of the optical drive cage with the four slots on the chassis and cage bar; then, lower the drive cage assembly into the chassis.

b. ❷ Ensure that the drive cage assembly is seated correctly; then, rotate the handle on the optical drive cage toward the front of the chassis to secure the drive cage assembly into place.

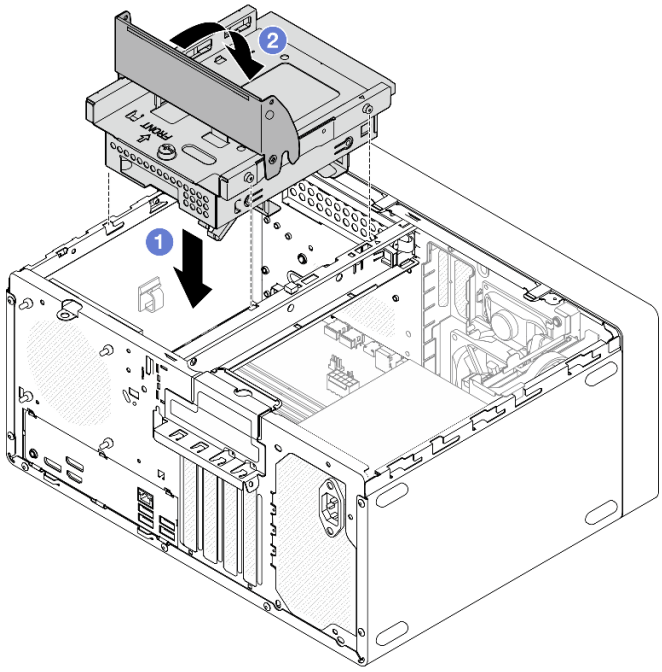

Figure 60. Installing the ODD+bay 2 drive cage assembly

Procedure

1. If applicable, install the optical drive. See “Install an optical drive” on page 54.
2. Connect the signal and power cables to the 3.5-inch drive and optical drive. See Chapter 2 “Internal cable routing” on page 129.
3. Complete the parts replacement. See “Complete the parts replacement” on page 126.

Demo video

https://www.youtube.com/watch?v=Ce8VkGaSFYA

Fan replacement

Follow instructions in this section to remove and install the front fan or rear fan.

Note: For heat sink and fan module replacement, see “Heat sink and fan module replacement (trained technician only)” on page 69.

Remove the fan (front and rear)

Follow instructions in this section to remove the front fan and rear fan.

About this task

S002

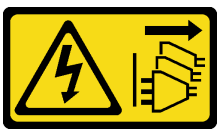

CAUTION:
The power-control button on the device and the power switch on the power supply do not turn off the electrical current supplied to the device. The device also might have more than one power cord. To remove all electrical current from the device, ensure that all power cords are disconnected from the power source.

Attention:

- Read "Installation Guidelines" on page 1 and "Safety inspection checklist" on page 2 to ensure that you work safely.
- Power off the server and peripheral devices and disconnect the power cords and all external cables. See "Power off the server" on page 6.
- If the server is in a rack, remove it from the rack. See "Remove the server from rack" on page 6.
- Remove any locking device that secures the server, such as a Kensington lock or a padlock.
- Place the server on its side with the cover up.

Procedure

Step 1. Make preparation for this task.

a. Remove the server cover. See "Remove the server cover" on page 118.

Attention: The heat sink and processor could be very hot. To avoid burning yourself, wait for a few minutes after turning off the server before you remove the server cover.

b. **(For removing the front fan only)** Remove the front bezel. See "Remove the front bezel" on page 67.

Step 2. Disconnect the fan cable from the system board.

Attention: To avoid damaging the system board, make sure to follow the instructions in Chapter 2 "Internal cable routing" on page 129 when disconnecting cables from the system board.

Step 3. If you are removing the rear fan for replacing or recycling the system board or removing the front fan for replacing the thermal sensor, perform the following steps.

a. ❶ Carefully squeeze the four rubber mounts with a pair of pliers and push the rubber mounts inward.

b. ❷ Slide the fan away from the chassis; then, lift it out of the chassis.

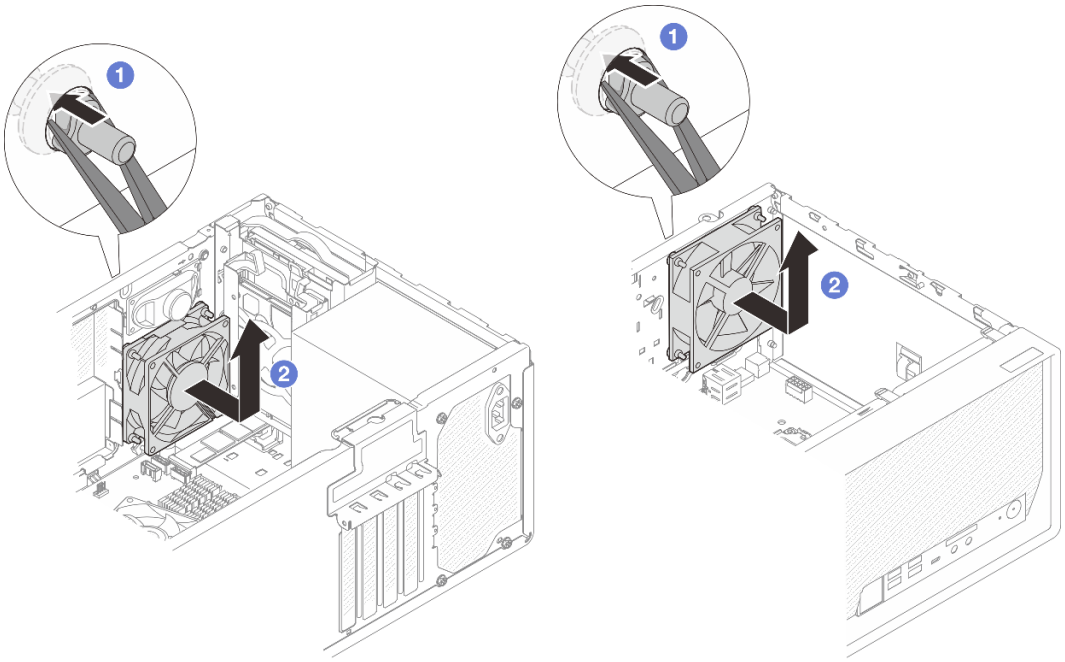

Figure 61. Removing the fan by squeezing rubber mounts

Step 4. If you are replacing the front or rear fan, perform the following steps.

a. 1 From the outside of the chassis, cut off the four rubber mounts that secure the fan to the chassis.

b. 2 Slide the fan away from the chassis; then, lift it out of the chassis.

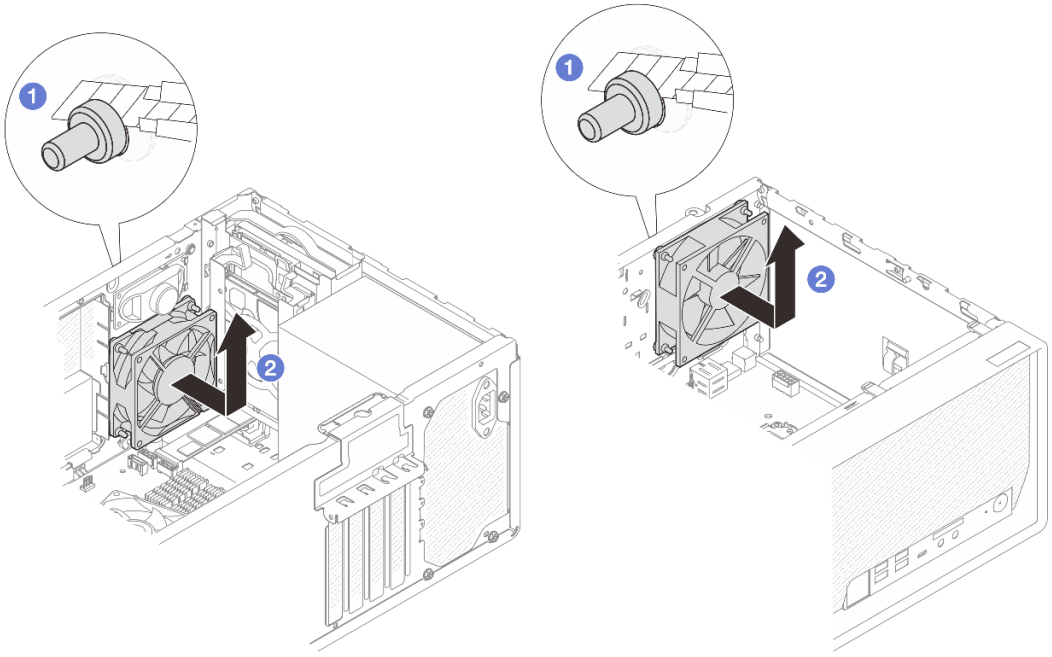

Figure 62. Removing the fan by cutting off rubber mounts

After you finish

1. Install a replacement unit. See “Install the fan (front and rear)” on page 65.
2. If you are instructed to return the component or optional device, follow all packaging instructions, and use any packaging materials for shipping that are supplied to you.

Demo video

https://www.youtube.com/watch?v=rv_a-bKvuoc

Install the fan (front and rear)

Follow instructions in this section to install the front fan or rear fan.

About this task

S002



CAUTION:
The power-control button on the device and the power switch on the power supply do not turn off the electrical current supplied to the device. The device also might have more than one power cord. To remove all electrical current from the device, ensure that all power cords are disconnected from the power source.

Attention:

- Read “Installation Guidelines” on page 1 and “Safety inspection checklist” on page 2 to ensure that you work safely.
- Touch the static-protective package that contains the component to any unpainted metal surface on the server; then, remove it from the package and place it on a static-protective surface.

Procedure

Step 1. Install the front fan or rear fan.

a. ❶ Align the four rubber mounts on the fan with the corresponding holes on the chassis.

b. ❷ With a pair of pliers, gently pull the tips of the four rubber mounts through the holes until the fan is secured to the chassis.

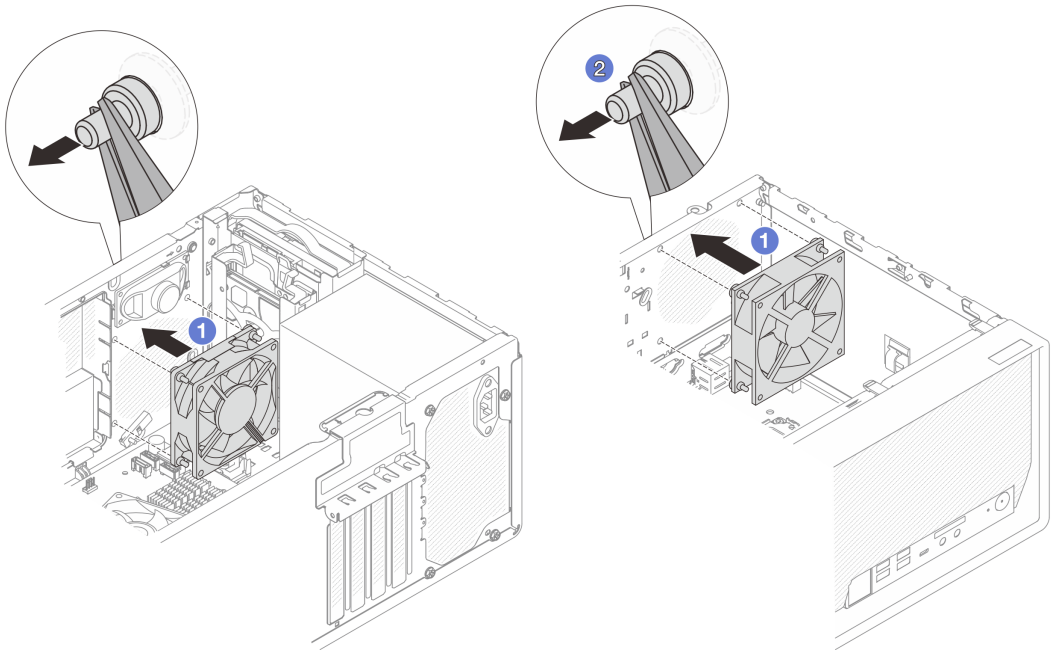

Figure 63. Installing the front fan or the rear fan

Note: Make sure the rubber mounts are fully pulled out of the holes to secure the fans steadily to the chassis.

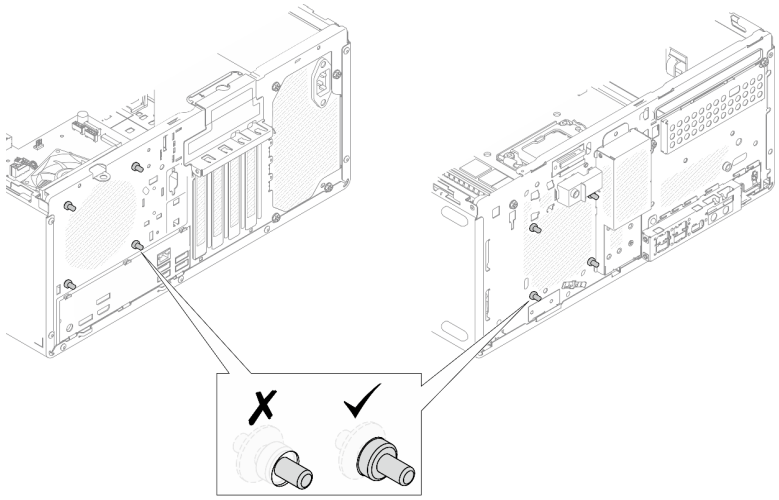

Figure 64. Front fan and rear fan rubber mounts installation

Step 2. Connect the fan cable to the system board. See Chapter 2 “Internal cable routing” on page 129.

After you finish

1. **(For installing the front fan only)** Install the front bezel. See “Install the front bezel” on page 68.
2. Complete the parts replacement. See “Complete the parts replacement” on page 126.

Demo video

https://www.youtube.com/watch?v=WbRTRamEDhE

Front bezel replacement

Follow instructions in this section to remove and install the front bezel.

Remove the front bezel

Follow instructions in this section to remove the front bezel.

About this task

S002



CAUTION:
The power-control button on the device and the power switch on the power supply do not turn off the electrical current supplied to the device. The device also might have more than one power cord. To remove all electrical current from the device, ensure that all power cords are disconnected from the power source.

Attention:

- Read “Installation Guidelines” on page 1 and “Safety inspection checklist” on page 2 to ensure that you work safely.
- Power off the server and peripheral devices and disconnect the power cords and all external cables. See “Power off the server” on page 6.
- If the server is in a rack, remove it from the rack. See “Remove the server from rack” on page 6.
- Remove any locking device that secures the server, such as a Kensington lock or a padlock.
- Place the server on its side with the cover up.

Procedure

Step 1. Remove the server cover. See “Remove the server cover” on page 118.

Attention: The heat sink and processor could be very hot. To avoid burning yourself, wait for a few minutes after turning off the server before you remove the server cover.

Step 2. Remove the front bezel.

a. ❶ Release the three plastic tabs on the front bezel.

b. ❷ Rotate the front bezel to remove it from the chassis.

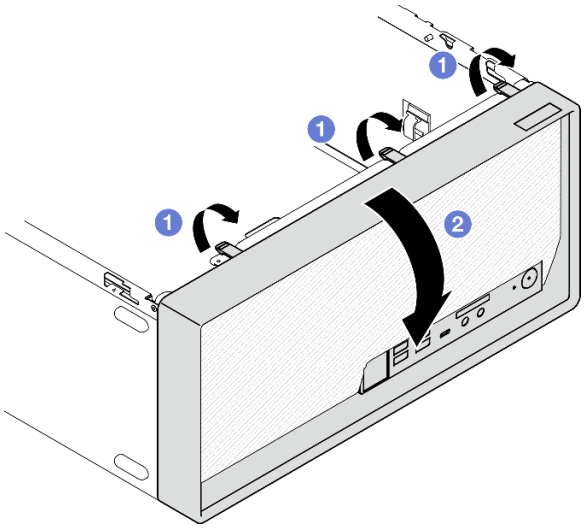

Figure 65. Removing the front bezel

After you finish

1. Install a replacement unit. See “Install the front bezel” on page 68.
2. If you are instructed to return the component or optional device, follow all packaging instructions, and use any packaging materials for shipping that are supplied to you.

Demo video

https://www.youtube.com/watch?v=jckqWu9svCw

Install the front bezel

Follow instructions in this section to install the front bezel.

About this task

S002

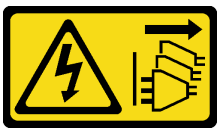

CAUTION:
The power-control button on the device and the power switch on the power supply do not turn off the electrical current supplied to the device. The device also might have more than one power cord. To remove all electrical current from the device, ensure that all power cords are disconnected from the power source.

Attention: Read “Installation Guidelines” on page 1 and “Safety inspection checklist” on page 2 to ensure that you work safely.

Procedure

Step 1. Install the front bezel.

a. 1 Insert the three plastic tabs on the bottom of the front bezel with the corresponding slots on the front of the chassis.

b. 2 Pivot the front bezel towards the chassis until it snaps into place.

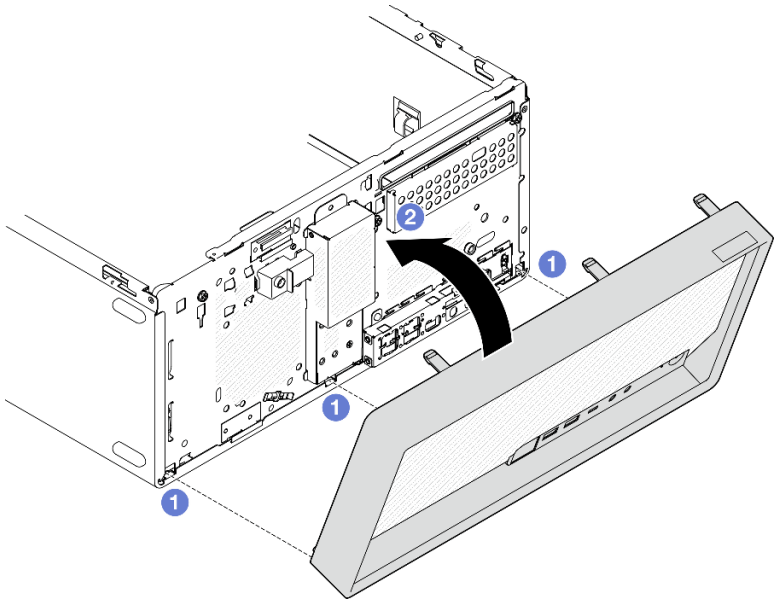

Figure 66. Installing the front bezel

Step 2. Install the server cover. See "Install the server cover" on page 120.

After you finish

Complete the parts replacement. See "Complete the parts replacement" on page 126.

Demo video

https://www.youtube.com/watch?v=a1o-ilwvK7M

Heat sink and fan module replacement (trained technician only)

Follow instructions in this section to remove and install the heat sink and fan module.

Important: This task must be operated by trained technicians that are certified by Lenovo Service. Do not attempt to remove or install the part without proper training and qualification.

Remove the heat sink and fan module (trained technician only)

Follow instructions in this section to remove the heat sink and fan module. The procedure must be executed by a trained technician.

About this task

S002

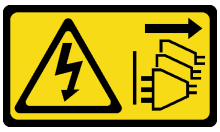

CAUTION:
The power-control button on the device and the power switch on the power supply do not turn off the electrical current supplied to the device. The device also might have more than one power cord. To remove all electrical current from the device, ensure that all power cords are disconnected from the power source.

Attention:

- Read “Installation Guidelines” on page 1 and “Safety inspection checklist” on page 2 to ensure that you work safely.
- Power off the server and peripheral devices and disconnect the power cords and all external cables. See “Power off the server” on page 6.
- If the server is in a rack, remove it from the rack. See “Remove the server from rack” on page 6.
- Remove any locking device that secures the server, such as a Kensington lock or a padlock.
- Place the server on its side with the cover up.

Procedure

Step 1. Make preparation for this task.

a. Remove the server cover. See “Remove the server cover” on page 118.

Attention: The heat sink and processor could be very hot. To avoid burning yourself, wait for a few minutes after turning off the server before you remove the server cover.

b. If applicable, remove the ODD+bay 2 drive cage assembly (see “Remove an optical drive cage” on page 57) or remove the bay 2+bay 3 drive cage assembly (see “Remove the drive cage (bay 3)” on page 46).

Step 2. Disconnect the heat sink and fan module cable from the system board.

Attention: To avoid damaging the system board, make sure to follow the instructions in Chapter 2 “Internal cable routing” on page 129 when disconnecting cables from the system board.

Step 3. Remove the heat sink and fan module.

a. ❶ & ❷ Loosen screw 1 and 2: First, partially loosen screw 1; then, fully loosen screw 2. Finally, fully loosen screw 1.

b. ❸ & ❹ Loosen screw 3 and 4: First, partially loosen screw 3; then, fully loosen screw 4. Finally, fully loosen screw 3.

c. ❺ Lift evenly and remove the heat sink and fan module from the server.

Notes:

1. Gently remove the four screws to avoid any possible damage to the system board.
2. Always keep the four screws attached to the heat sink and fan module.
3. Do not touch the thermal grease while handling the heat sink and fan module.

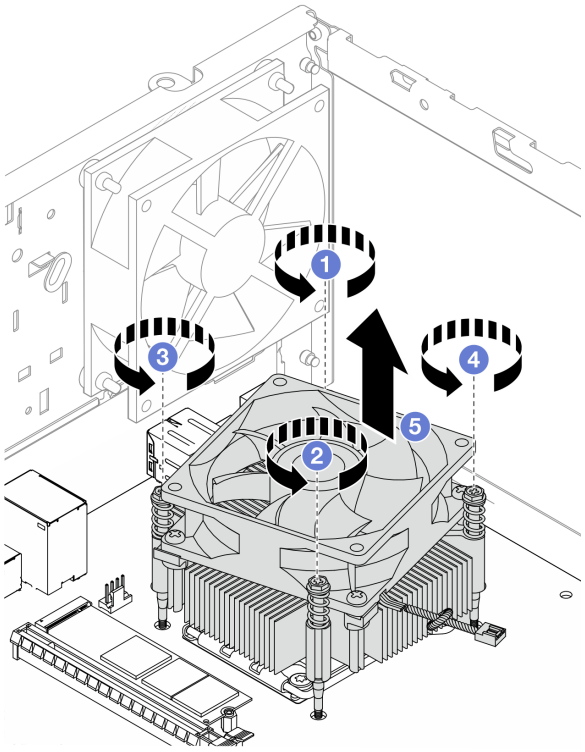

Figure 67. Removing the heat sink and fan module

After you finish

1. Install a replacement unit. See “Install the heat sink and fan module (trained technician only)” on page 71.
2. If you are instructed to return the component or optional device, follow all packaging instructions, and use any packaging materials for shipping that are supplied to you.

Demo video

https://www.youtube.com/watch?v=yPVzSTWPgrk

Install the heat sink and fan module (trained technician only)

Follow instructions in this section to install the heat sink and fan module. The procedure must be executed by a trained technician.

About this task

S002

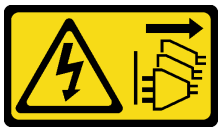

CAUTION:
The power-control button on the device and the power switch on the power supply do not turn off the electrical current supplied to the device. The device also might have more than one power cord. To

remove all electrical current from the device, ensure that all power cords are disconnected from the power source.

Attention:

- Read “Installation Guidelines” on page 1 and “Safety inspection checklist” on page 2 to ensure that you work safely.
- Touch the static-protective package that contains the component to any unpainted metal surface on the server; then, remove it from the package and place it on a static-protective surface.

Procedure

Step 1. Install the processor if one is not yet installed. See “Install the processor (trained technician only)” on page 107.

Step 2. Align the four screws on the heat sink and fan module with the corresponding screw holes in the chassis. Make sure the fan cable is close to the heat sink fan connector. See “System-board connectors” in *User Guide* or *System Configuration Guide*.

Step 3. Install the heat sink and fan module.

a. 1 & 2 Tighten screw 1 and 2: First, partially tighten screw 1; then, fully tighten screw 2. Finally, fully tighten screw 1.

b. 3 & 4 Tighten screw 3 and 4: First, partially tighten screw 3; then, fully tighten screw 4. Finally, fully tighten screw 3.

Note: Do not touch the thermal grease while handling the heat sink and fan module.

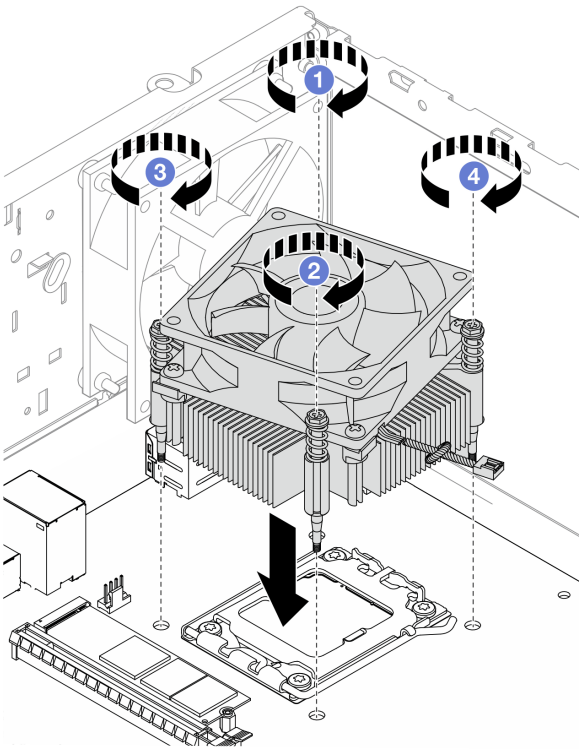

Figure 68. Installing the heat sink and fan module

Step 4. Connect the heat sink fan cable to the system board. See Chapter 2 “Internal cable routing” on page 129.

After you finish

1. If applicable, install the ODD+bay 2 drive cage assembly (see “Install the optical drive cage” on page 59) or install the bay 2+bay 3 drive cage assembly (see “Install the drive cage (bay 3)” on page 48).
2. Complete the parts replacement. See “Complete the parts replacement” on page 126.

Demo video

https://www.youtube.com/watch?v=9k154qBwPhQ

M.2 drive replacement

Follow instructions in this section to remove and install the M.2 drive.

Notes:

- If two M.2 drives are to be installed, install M.2 drive 1 first.
- For M.2 drive locations, see “Side view” in *User Guide* or *System Configuration Guide*.

Remove an M.2 drive

Follow instructions in this section to remove an M.2 drive.

About this task

S002



CAUTION:
The power-control button on the device and the power switch on the power supply do not turn off the electrical current supplied to the device. The device also might have more than one power cord. To remove all electrical current from the device, ensure that all power cords are disconnected from the power source.

Attention:

- Read “Installation Guidelines” on page 1 and “Safety inspection checklist” on page 2 to ensure that you work safely.
- Power off the server and peripheral devices and disconnect the power cords and all external cables. See “Power off the server” on page 6.
- If the server is in a rack, remove it from the rack. See “Remove the server from rack” on page 6.
- Remove any locking device that secures the server, such as a Kensington lock or a padlock.
- Place the server on its side with the cover up.

Procedure

Step 1. Make preparation for this task.

a. Remove the server cover. See “Remove the server cover” on page 118.

Attention: The heat sink and processor could be very hot. To avoid burning yourself, wait for a few minutes after turning off the server before you remove the server cover.

b. If needed, remove the 2.5-inch drive from bay 1. See "Remove a simple-swap drive (bay 0-1)" on page 16.

c. Locate the M.2 drive to be removed. See "Side view" in *User Guide* or *System Configuration Guide*.

Step 2. Remove M.2 drive 1.

a. ❶ Remove the screw that secures the M.2 drive.

b. ❷ Rotate the rear end of the M.2 drive to an angle.

c. ❸ Remove the M.2 drive from the system board.

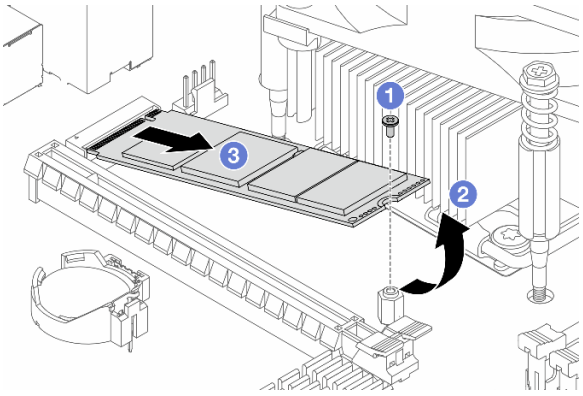

Figure 69. Removing M.2 drive 1

Step 3. Remove M.2 drive 2.

a. ❶ Lift the retainer post away from the M.2 drive retainer.

b. ❷ Rotate the rear end of the M.2 drive to an angle.

c. ❸ Remove the M.2 drive from the system board.

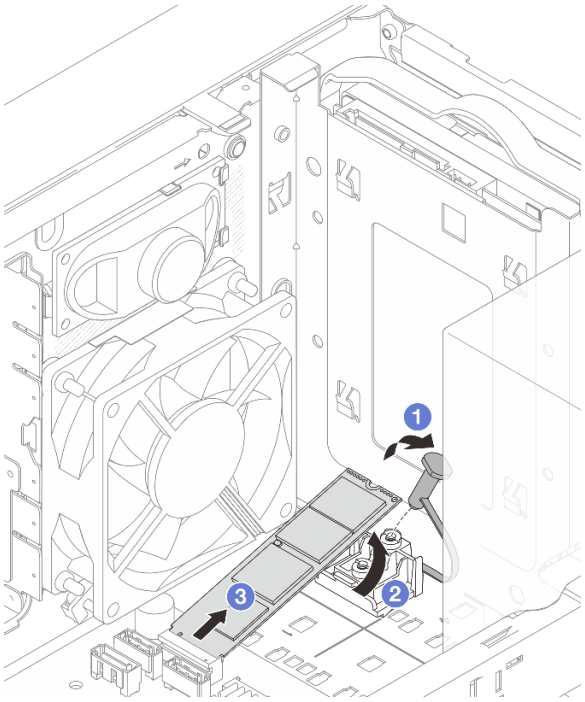

Figure 70. Removing M.2 drive 2

After you finish

1. Install a replacement unit. See “Install an M.2 drive” on page 75.
2. If you are instructed to return the component or optional device, follow all packaging instructions, and use any packaging materials for shipping that are supplied to you.

Demo video

https://www.youtube.com/watch?v=BrB4-4CFPMQ

Install an M.2 drive

Follow instructions in this section to install an M.2 drive.

About this task

S002

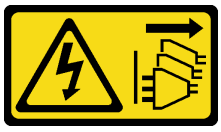

CAUTION:
The power-control button on the device and the power switch on the power supply do not turn off the electrical current supplied to the device. The device also might have more than one power cord. To remove all electrical current from the device, ensure that all power cords are disconnected from the power source.

Attention:

- Read “Installation Guidelines” on page 1 and “Safety inspection checklist” on page 2 to ensure that you work safely.
- Touch the static-protective package that contains the component to any unpainted metal surface on the server; then, remove it from the package and place it on a static-protective surface.

Procedure

Step 1. Locate the M.2 drive slot on the system board. See “Side view” in *User Guide* or *System Configuration Guide*.

Step 2. Install M.2 drive 1.

a. ❶ Insert the M.2 drive at an angle into the connector.

b. ❷ Place down the M.2 drive onto the screw hole.

c. ❸ Install the screw to secure the M.2 drive in place.

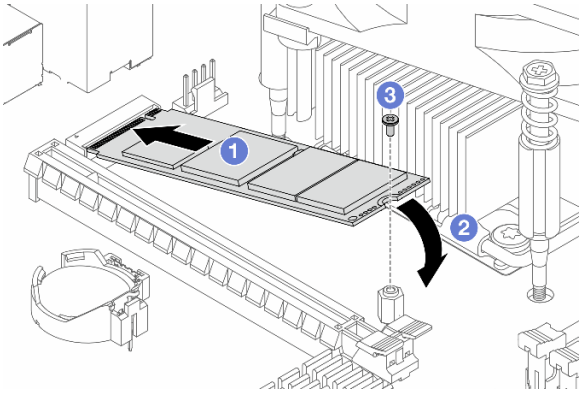

Figure 71. Installing M.2 drive 1

Step 3. Install M.2 drive 2.

a. ❶ Insert the M.2 drive at an angle into the connector.

b. ❷ Place down the M.2 drive onto the M.2 drive retainer.

c. ❸ Insert the retainer post into the retainer to secure the M.2 drive in place.

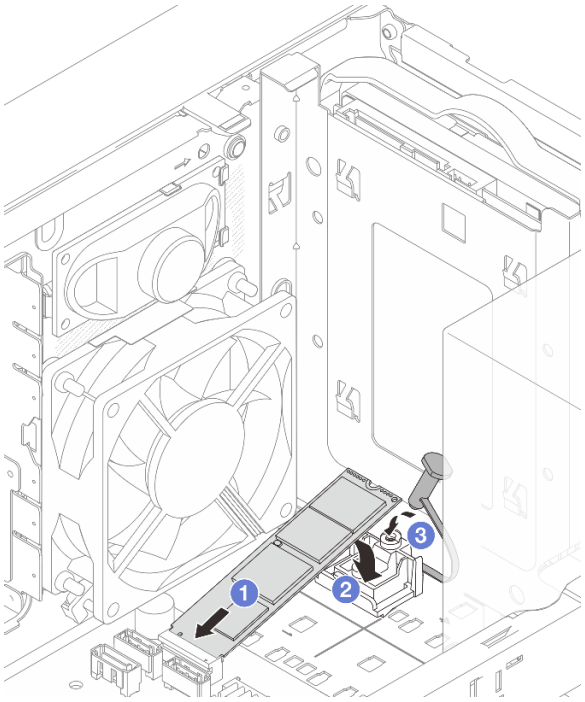

Figure 72. Installing M.2 drive 2

After you finish

1. If applicable, reinstall the 2.5-inch drive to bay 1. See “Install a simple-swap drive (bay 0-1)” on page 20.
2. Complete the parts replacement. See “Complete the parts replacement” on page 126.

Demo video

https://www.youtube.com/watch?v=rjBVwEaFcdc

Remove the M.2 drive retainer

Follow instructions in this section to remove the retainer for M.2 drive 2.

About this task

S002

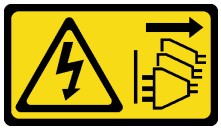

CAUTION:
The power-control button on the device and the power switch on the power supply do not turn off the electrical current supplied to the device. The device also might have more than one power cord. To remove all electrical current from the device, ensure that all power cords are disconnected from the power source.

Attention:

- Read “Installation Guidelines” on page 1 and “Safety inspection checklist” on page 2 to ensure that you work safely.
- Power off the server and peripheral devices and disconnect the power cords and all external cables. See “Power off the server” on page 6.
- If the server is in a rack, remove it from the rack. See “Remove the server from rack” on page 6.
- Remove any locking device that secures the server, such as a Kensington lock or a padlock.
- Place the server on its side with the cover up.

Procedure

Step 1. Make preparation for this task.

a. Remove the server cover. See “Remove the server cover” on page 118.

Attention: The heat sink and processor could be very hot. To avoid burning yourself, wait for a few minutes after turning off the server before you remove the server cover.

b. If applicable, remove the 2.5-inch drive from bay 1. See “Remove a simple-swap drive (bay 0-1)” on page 16.

c. Remove M.2 drive 2. See “Remove an M.2 drive” on page 73.

Step 2. Remove the M.2 drive retainer.

a. ❶ Press the tab on the retainer and slightly push the nub upward.

b. ❷ Slide the retainer forward and lift it out of the chassis.

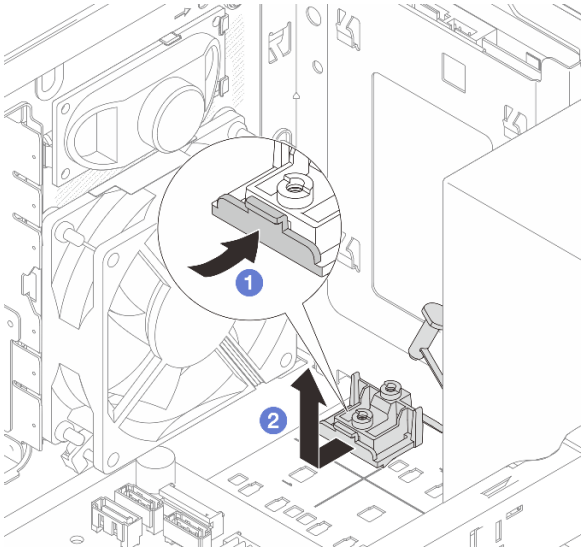

Figure 73. Removing the M.2 drive retainer

After you finish

1. Install a replacement unit. See “Install the M.2 drive retainer” on page 79.
2. If you are instructed to return the component or optional device, follow all packaging instructions, and use any packaging materials for shipping that are supplied to you.

Demo video

https://www.youtube.com/watch?v=BrB4-4CFPMQ

Install the M.2 drive retainer

Follow instructions in this section to install the retainer for M.2 drive 2.

About this task

S002

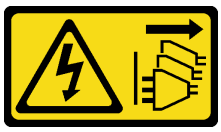

CAUTION:
The power-control button on the device and the power switch on the power supply do not turn off the electrical current supplied to the device. The device also might have more than one power cord. To remove all electrical current from the device, ensure that all power cords are disconnected from the power source.

Attention:

- Read “Installation Guidelines” on page 1 and “Safety inspection checklist” on page 2 to ensure that you work safely.
- Touch the static-protective package that contains the component to any unpainted metal surface on the server; then, remove it from the package and place it on a static-protective surface.

Procedure

Step 1. Align the M.2 drive retainer with the three slots on the chassis, and lower the retainer into the chassis; then, slide the retainer toward the 2.5-inch drive cage to secure it in place.

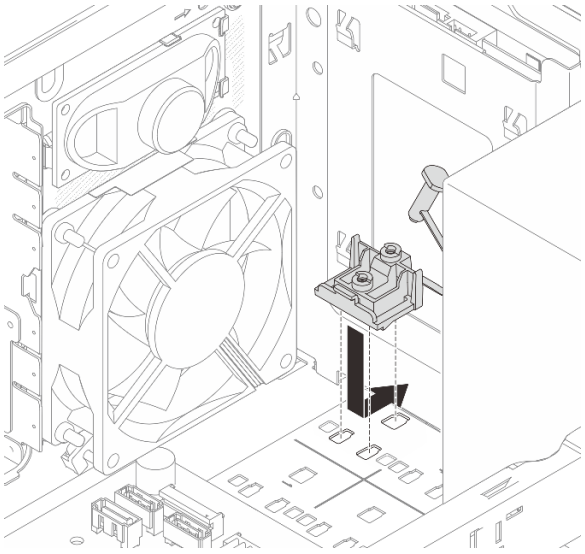

Figure 74. Installing the M.2 drive retainer

Step 2. Install an M.2 drive. See “Install an M.2 drive” on page 75.

After you finish

1. If applicable, reinstall the 2.5-inch drive to bay 1. See “Install a simple-swap drive (bay 0-1)” on page 20.

2. Complete the parts replacement. See “Complete the parts replacement” on page 126.

Demo video

https://www.youtube.com/watch?v=rjBVwEaFcdc

Memory module replacement

Follow instructions in this section to remove and install a memory module.

Remove a memory module

Follow instructions in this section to remove a memory module.

About this task

S002

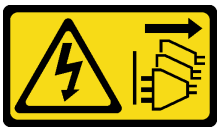

CAUTION:
The power-control button on the device and the power switch on the power supply do not turn off the electrical current supplied to the device. The device also might have more than one power cord. To remove all electrical current from the device, ensure that all power cords are disconnected from the power source.

Attention:

- Read “Installation Guidelines” on page 1 and “Safety inspection checklist” on page 2 to ensure that you work safely.
- Power off the server and peripheral devices and disconnect the power cords and all external cables. See “Power off the server” on page 6.
- If the server is in a rack, remove it from the rack. See “Remove the server from rack” on page 6.
- Remove any locking device that secures the server, such as a Kensington lock or a padlock.
- Place the server on its side with the cover up.
- Make sure to remove or install memory module 20 seconds after disconnecting power cords from the system. It allows the system to be completely discharged of electricity and safe for handling memory module.
- If you are not installing a replacement memory module to the same slot, make sure you have memory module filler available.
- Memory modules are sensitive to static discharge and require special handling. Refer to the standard guidelines for “Handling static-sensitive devices” on page 3.
  - Always wear an electrostatic-discharge strap when removing or installing memory modules. Electrostatic-discharge gloves can also be used.
  - Never hold two or more memory modules together so that they do not touch each other. Do not stack memory modules directly on top of each other during storage.
  - Never touch the gold memory module connector contacts or allow these contacts to touch the outside of the memory module connector housing.

- Handle memory modules with care: never bend, twist, or drop a memory module.
- Do not use any metal tools (such as jigs or clamps) to handle the memory modules, because the rigid metals may damage the memory modules.
- Do not insert memory modules while holding packages or passive components, which can cause package cracks or detachment of passive components by the high insertion force.

Procedure

Step 1. Make preparation for this task.

a. Remove the server cover. See “Remove the server cover” on page 118.

Attention: The heat sink and processor could be very hot. To avoid burning yourself, wait for a few minutes after turning off the server before you remove the server cover.

b. If applicable, remove the ODD+bay 2 drive cage assembly (see “Remove an optical drive cage” on page 57) or remove the bay 2+bay 3 drive cage assembly (see “Remove the drive cage (bay 3)” on page 46).

c. Locate the memory module slots and determine the memory module to be removed.

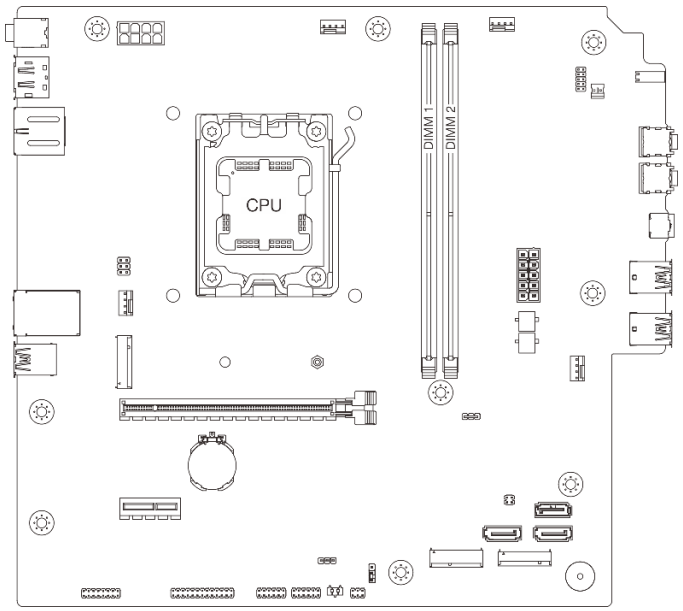

Figure 75. Memory modules and processor layout

Step 2. Open the retaining clips on each end of the memory module slot. If necessary, you can use a pointed tool to open the retaining clips due to space constraints. Pencils are not recommended as a tool as they may not be strong enough.

a. ❶ Place the tip of the tool in the recess on the top of the retaining clip.

b. ❷ Carefully rotate the retaining clip away from the memory module slot.

Attention: To avoid breaking the retaining clips or damaging the memory module slots, handle the clips gently.

Figure 76. Opening retaining clips

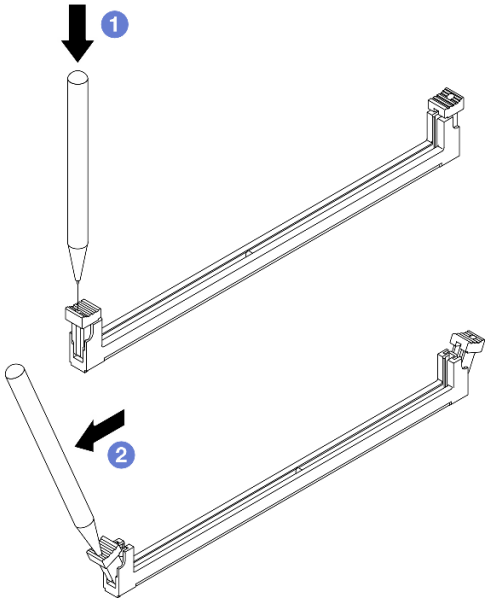

Step 3. Remove the memory module from the slot.

a. ① Make sure the retaining clips are in the fully open position.

b. ② Hold the memory module at both ends and carefully lift it out of the slot.

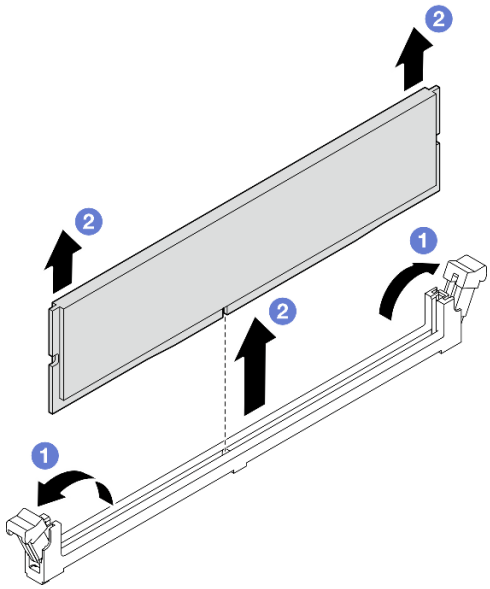

Figure 77. Memory module removal

After you finish

1. Install a replacement unit. See "Install a memory module" on page 83.
2. If you are instructed to return the component or optional device, follow all packaging instructions, and use any packaging materials for shipping that are supplied to you.

Demo video

https://www.youtube.com/watch?v=tiS551OwN84

Install a memory module

Follow instructions in this section to install a memory module.

About this task

S002



CAUTION:
The power-control button on the device and the power switch on the power supply do not turn off the electrical current supplied to the device. The device also might have more than one power cord. To remove all electrical current from the device, ensure that all power cords are disconnected from the power source.

See for detailed information about memory configuration and setup.

Attention:

- Read “Installation Guidelines” on page 1 and “Safety inspection checklist” on page 2 to ensure that you work safely.
- Make sure to remove or install memory module 20 seconds after disconnecting power cords from the system. It allows the system to be completely discharged of electricity and safe for handling memory module.
- Make sure to adopt one of the supported configurations listed in “Memory module installation rules and order” on page 5.
- Memory modules are sensitive to static discharge and require special handling. Refer to the standard guidelines at “Handling static-sensitive devices” on page 3:
  - Always wear an electrostatic-discharge strap when removing or installing memory modules. Electrostatic-discharge gloves can also be used.
  - Never hold two or more memory modules together so that they do not touch each other. Do not stack memory modules directly on top of each other during storage.
  - Never touch the gold memory module connector contacts or allow these contacts to touch the outside of the memory module connector housing.
  - Handle memory modules with care: never bend, twist, or drop a memory module.
  - Do not use any metal tools (such as jigs or clamps) to handle the memory modules, because the rigid metals may damage the memory modules.
  - Do not insert memory modules while holding packages or passive components, which can cause package cracks or detachment of passive components by the high insertion force.

Firmware and driver download: You might need to update the firmware or driver after replacing a component.

- Go to https://datacentersupport.lenovo.com/products/servers/thinksystem/st45v3/downloads/driver-list/ to see the latest firmware and driver updates for your server.

- Go to “Update the firmware” in *User Guide* or *System Configuration Guide* for more information on firmware updating tools.

Procedure

Attention: Make sure to remove or install memory module 20 seconds after disconnecting power cords from the system. It allows the system to be completely discharged of electricity and safe for handling memory module.

Step 1. Locate the memory module slots and determine the memory module installation order based on “Memory module installation rules and order” on page 5.

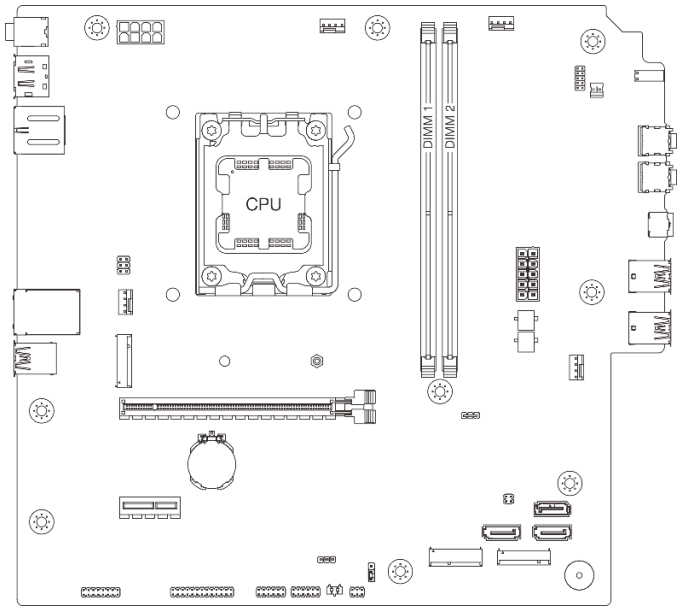

Figure 78. Memory modules and processor layout

Step 2. Open the retaining clips on each end of the memory module slot. If necessary, you can use a pointed tool to open the retaining clips due to space constraints. Pencils are not recommended as a tool as they may not be strong enough.

a. ❶ Place the tip of the tool in the recess on the top of the retaining clip.

b. ❷ Carefully rotate the retaining clip away from the memory module slot.

Attention: To avoid breaking the retaining clips or damaging the memory module slots, handle the clips gently.

Figure 79. Opening retaining clips

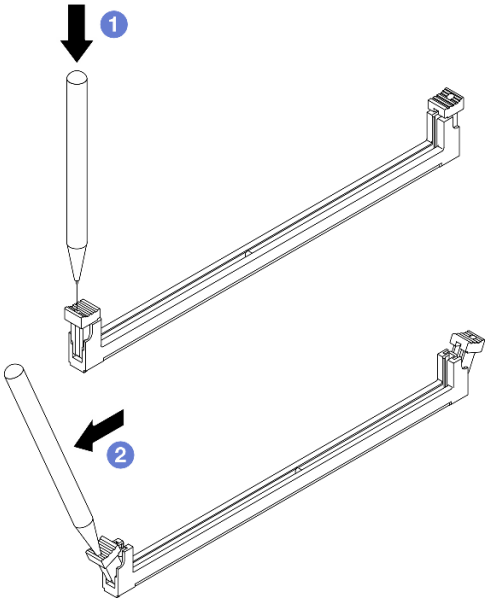

Step 3. Install the memory module into the slot.

a. 1 Make sure the retaining clips are in the fully open position.

b. 2 Align the memory module with the slot, and gently place the memory module on the slot with both hands.

c. 3 Firmly press both ends of the memory module straight down into the slot until the retaining clips snap into the locked position.

Attention: If there is a gap between the memory module and the retaining clips, the memory module has not been correctly inserted. In this case, open the retaining clips, remove the memory module, and then reinsert it.

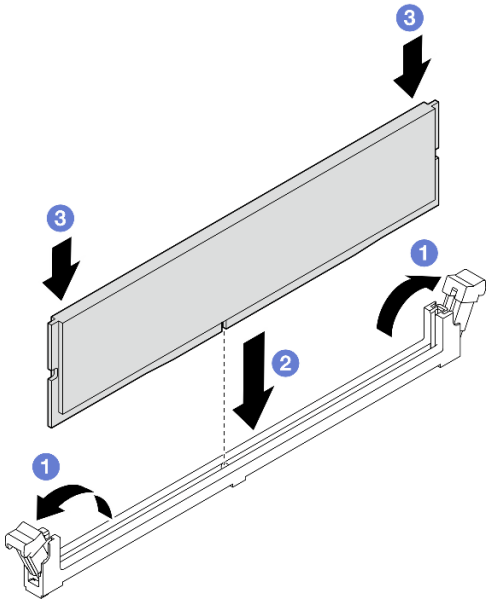

Figure 80. Memory module installation

After you finish

1. If applicable, install the ODD+bay 2 drive cage assembly (see “Install the optical drive cage” on page 59) or install the bay 2+bay 3 drive cage assembly (see “Install the drive cage (bay 3)” on page 48).
2. Complete the parts replacement. See “Complete the parts replacement” on page 126.

Demo video

https://www.youtube.com/watch?v=mrtFc4BZvXY

Mono amplifier (speaker) replacement

If the chassis supports the mono amplifier, follow instructions in this section to remove and install the mono amplifier (speaker).

Remove the mono amplifier (speaker)

Follow instructions in this section to remove the mono amplifier (speaker).

About this task

S002

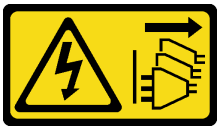

CAUTION:
The power-control button on the device and the power switch on the power supply do not turn off the electrical current supplied to the device. The device also might have more than one power cord. To remove all electrical current from the device, ensure that all power cords are disconnected from the power source.

Attention:

- Read “Installation Guidelines” on page 1 and “Safety inspection checklist” on page 2 to ensure that you work safely.
- Power off the server and peripheral devices and disconnect the power cords and all external cables. See “Power off the server” on page 6.
- If the server is in a rack, remove it from the rack. See “Remove the server from rack” on page 6.
- Remove any locking device that secures the server, such as a Kensington lock or a padlock.
- Place the server on its side with the cover up.

Procedure

Step 1. Remove the server cover. See “Remove the server cover” on page 118.

Attention: The heat sink and processor could be very hot. To avoid burning yourself, wait for a few minutes after turning off the server before you remove the server cover.

Step 2. Disconnect the mono amplifier cable from the system board.

Attention: To avoid damaging the system board, make sure to follow the instructions in Chapter 2 “Internal cable routing” on page 129 when disconnecting cables from the system board.

Step 3. Remove the mono amplifier.

a. 1 Remove the screw that secures the mono amplifier to the chassis.

b. 2 Slide out the mono amplifier from the bracket, and remove it from the chassis.

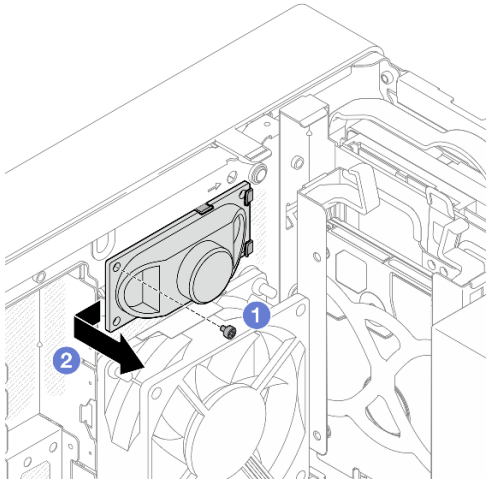

Figure 81. Removing the mono amplifier

After you finish

1. Install a replacement unit. See "Install the mono amplifier (speaker)" on page 87.
2. If you are instructed to return the component or optional device, follow all packaging instructions, and use any packaging materials for shipping that are supplied to you.

Demo video

https://www.youtube.com/watch?v=X_bxfl409aE

Install the mono amplifier (speaker)

Follow instructions in this section to install the mono amplifier (speaker).

About this task

S002



CAUTION:
The power-control button on the device and the power switch on the power supply do not turn off the electrical current supplied to the device. The device also might have more than one power cord. To remove all electrical current from the device, ensure that all power cords are disconnected from the power source.

Attention:

- Read "Installation Guidelines" on page 1 and "Safety inspection checklist" on page 2 to ensure that you work safely.

- Touch the static-protective package that contains the component to any unpainted metal surface on the server; then, remove it from the package and place it on a static-protective surface.

Procedure

Step 1. Install the mono amplifier.

a. ❶ Insert the mono amplifier into the bracket on the inside of the chassis.

b. ❷ Fasten the screw to secure the mono amplifier to the chassis.

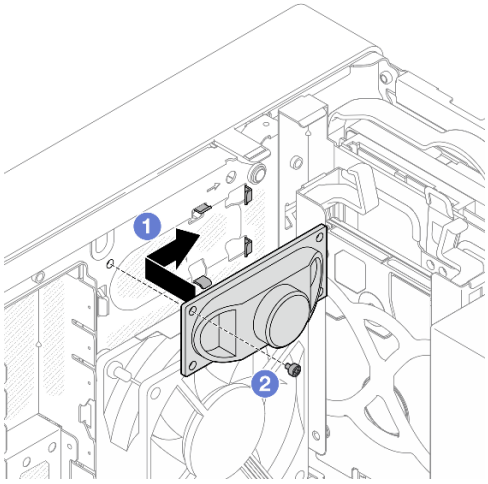

Figure 82. Installing the mono amplifier

Step 2. Connect the mono amplifier cable to the system board. See Chapter 2 “Internal cable routing” on page 129.

After you finish

Complete the parts replacement. See “Complete the parts replacement” on page 126.

Demo video

https://www.youtube.com/watch?v=tMiKM_f-zpo

PCIe adapter replacement

Follow instructions in this section to remove and install a PCIe adapter.

Remove a PCIe adapter

Follow instructions in this section to remove a PCIe adapter.

About this task

S002

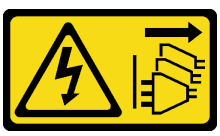

CAUTION:
The power-control button on the device and the power switch on the power supply do not turn off the electrical current supplied to the device. The device also might have more than one power cord. To remove all electrical current from the device, ensure that all power cords are disconnected from the power source.

Attention:

- Read “Installation Guidelines” on page 1 and “Safety inspection checklist” on page 2 to ensure that you work safely.
- Power off the server and peripheral devices and disconnect the power cords and all external cables. See “Power off the server” on page 6.
- If the server is in a rack, remove it from the rack. See “Remove the server from rack” on page 6.
- Remove any locking device that secures the server, such as a Kensington lock or a padlock.
- Place the server on its side with the cover up.

Notes:

- For a list of the supported PCIe adapters, see https://serverproven.lenovo.com.
- The PCIe adapter might look different from the illustration.

Procedure

Step 1. Make preparation for this task.

a. Remove the server cover. See “Remove the server cover” on page 118.

Attention: The heat sink and processor could be very hot. To avoid burning yourself, wait for a few minutes after turning off the server before you remove the server cover.

b. Disconnect all PCIe adapter cables. See Chapter 2 “Internal cable routing” on page 129.

Step 2. Remove the PCIe adapter.

a. ❶ Rotate the PCIe adapter retainer clip to the open position.

b. ❷ Press the retaining clip to release the PCIe adapter.

Note: This step is applicable only to the PCIe adapter installed in PCIe slot 1.

c. ❸ Hold the PCIe adapter by both edges, and gently lift it out from the PCIe slot.

Note: The PCIe adapter might be clamped by the slot tightly. In this case, gently and evenly shake the PCIe adapter until the clamping force from the connector is significantly reduced and the adapter becomes easily removable.

Figure 83. Removing a PCIe adapter

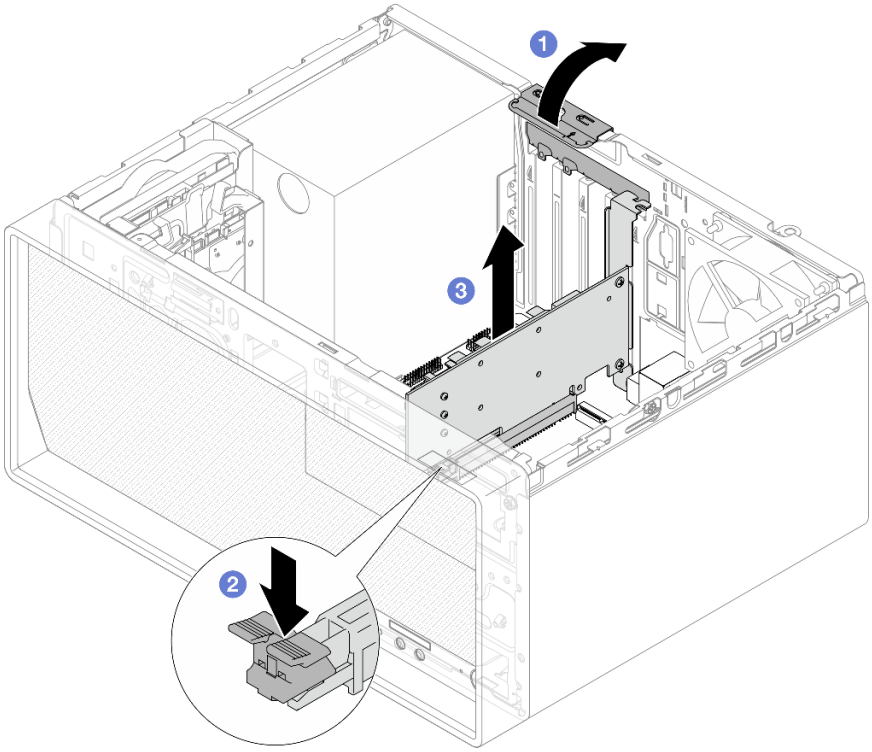

After you finish

1. Install a replacement unit. See “Install a PCIe adapter” on page 91. Otherwise, install a bracket to cover the vacancy on the chassis, and close the retainer clip.

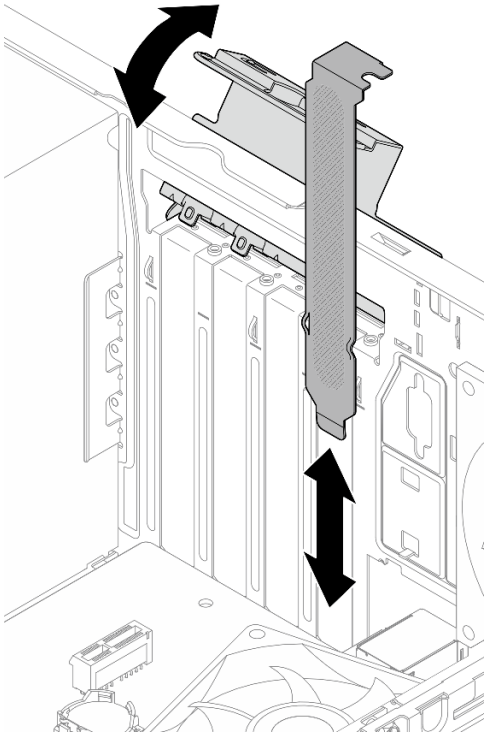

Figure 84. Installing a PCIe adapter bracket

2. If you are instructed to return the component or optional device, follow all packaging instructions, and use any packaging materials for shipping that are supplied to you.

Demo video

https://www.youtube.com/watch?v=oFJWURkNF3I

Install a PCIe adapter

Follow instructions in this section to install a PCIe adapter.

About this task

S002

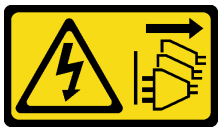

CAUTION:
The power-control button on the device and the power switch on the power supply do not turn off the electrical current supplied to the device. The device also might have more than one power cord. To remove all electrical current from the device, ensure that all power cords are disconnected from the power source.

Attention:

- Read “Installation Guidelines” on page 1 and “Safety inspection checklist” on page 2 to ensure that you work safely.
- Touch the static-protective package that contains the component to any unpainted metal surface on the server; then, remove it from the package and place it on a static-protective surface.

Notes:

- For a list of the supported PCIe adapters, see https://serverproven.lenovo.com.
- The PCIe adapter might look different from the illustration.

Procedure

Step 1. Make preparation for this task.

a. If a bracket is installed in the chassis, open the PCIe adapter retainer clip and remove the bracket from the chassis. Keep the bracket for future use.

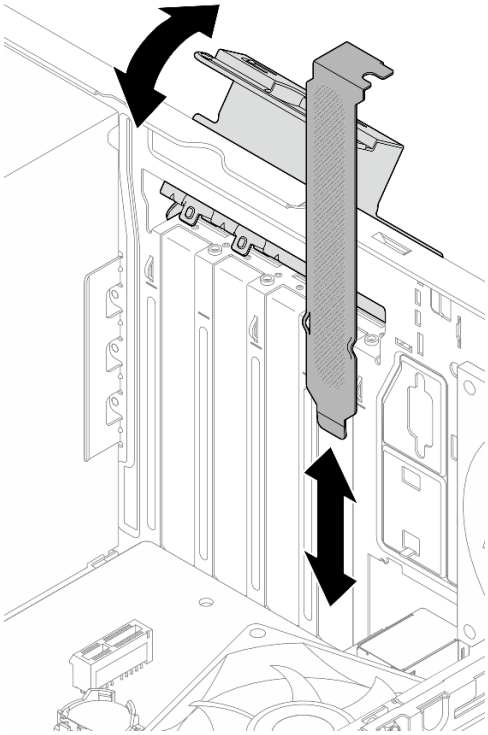

Figure 85. Removing a PCIe adapter bracket

b. Locate the applicable PCIe slot. For more information about the PCIe slots, see “Technical Specifications” in *User Guide* or *System Configuration Guide*.

Step 2. Install the PCIe adapter.

a. ❶ Align the PCIe adapter to the slot; then, gently press both ends of the PCIe adapter until it is securely seated in the slot with ❷ the retaining clip clicks into the locked position.

b. ❸ Rotate the PCIe adapter retainer clip towards the chassis until it snaps into locked position.

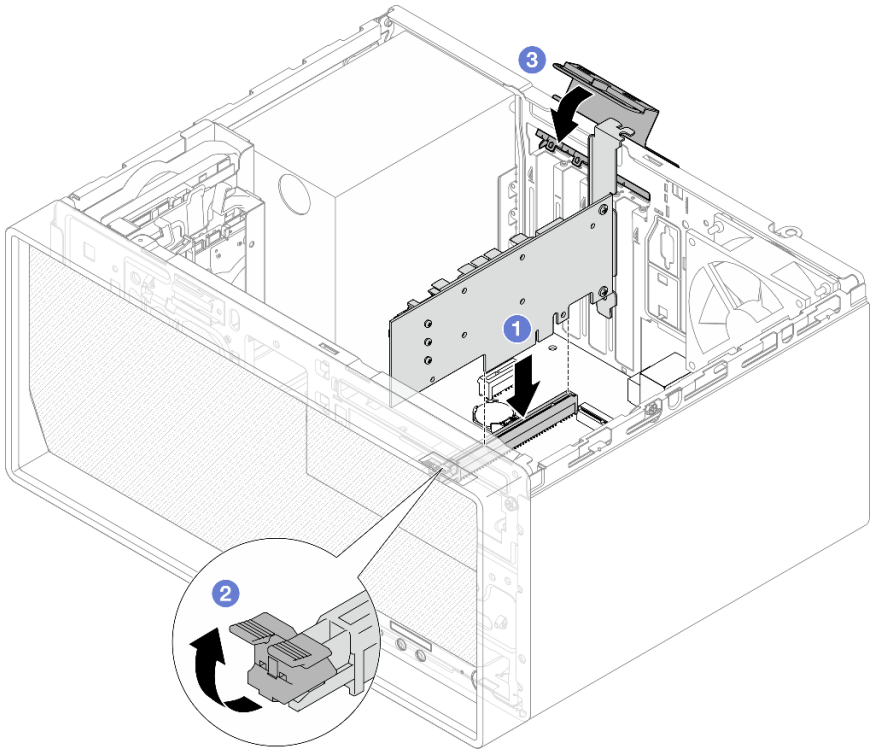

Figure 86. Installing a PCIe adapter

Step 3. Connect the PCIe adapter cables. See Chapter 2 “Internal cable routing” on page 129.

After you finish

Complete the parts replacement. See “Complete the parts replacement” on page 126.

Demo video

https://www.youtube.com/watch?v=p8rQ1ajTu8Y

Power button with LED replacement

Follow instructions in this section to remove and install the power button with LED.

Remove the power button with LED

Follow instructions in this section to remove the power button with LED.

S002

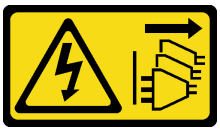

CAUTION:
The power-control button on the device and the power switch on the power supply do not turn off the electrical current supplied to the device. The device also might have more than one power cord. To remove all electrical current from the device, ensure that all power cords are disconnected from the power source.

About this task

Attention:

- Read "Installation Guidelines" on page 1 and "Safety inspection checklist" on page 2 to ensure that you work safely.
- Power off the server and peripheral devices and disconnect the power cords and all external cables. See "Power off the server" on page 6.
- If the server is in a rack, remove it from the rack. See "Remove the server from rack" on page 6.
- Remove any locking device that secures the server, such as a Kensington lock or a padlock.
- Place the server on its side with the cover up.

Procedure

Step 1. Make preparation for this task.

a. Remove the server cover. See "Remove the server cover" on page 118.

Attention: The heat sink and processor could be very hot. To avoid burning yourself, wait for a few minutes after turning off the server before you remove the server cover.

b. Remove the front bezel. See "Remove the front bezel" on page 67.

Step 2. Remove the power button cable from the system board.

Attention: To avoid damaging the system board, make sure to follow the instructions in Chapter 2 "Internal cable routing" on page 129 when disconnecting cables from the system board.

Step 3. Remove the screw that secures the front I/O bracket to the chassis.

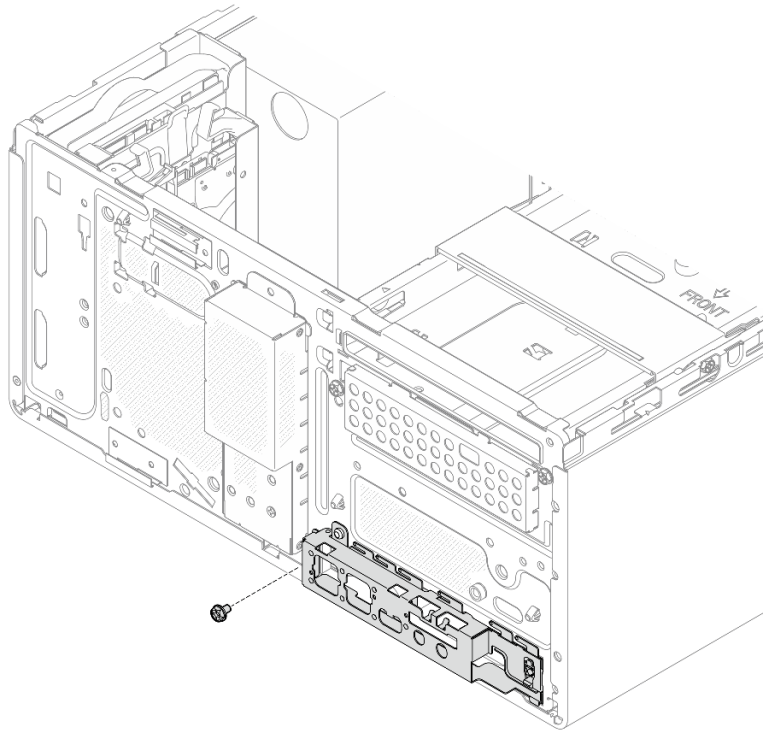

Figure 87. Removing the screw that secures the front I/O bracket

Step 4. Remove the front I/O bracket.

a. ❶ Rotate the left end of the front I/O bracket away from the chassis.

b. ❷ Remove the front I/O bracket from the chassis.

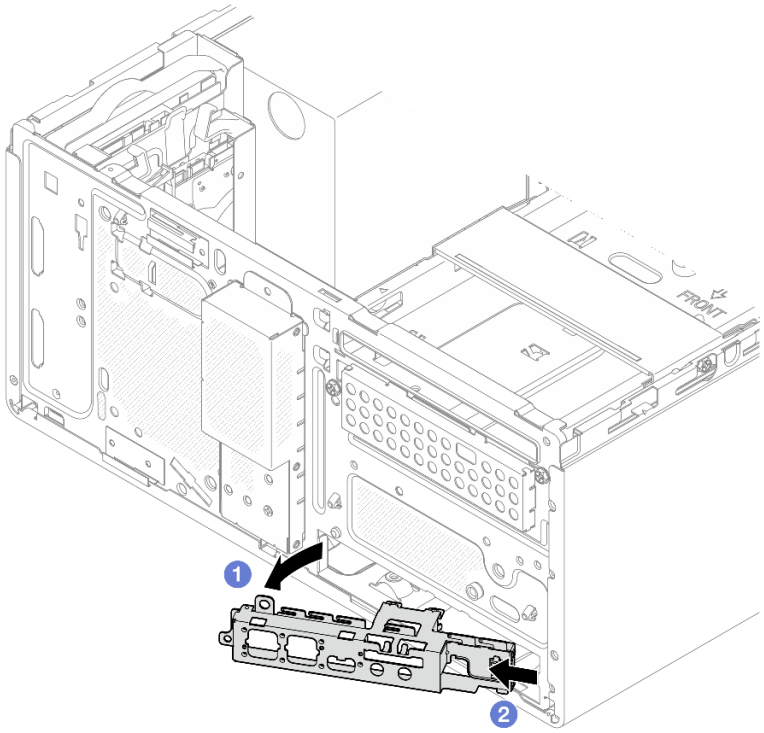

Figure 88. Removing the front I/O bracket from the chassis

Step 5. Remove the power button with LED from the front I/O bracket.

a. 1 Press the release tab on the power button to release it from the front I/O bracket.

b. 2 Remove the power button from the front I/O bracket.

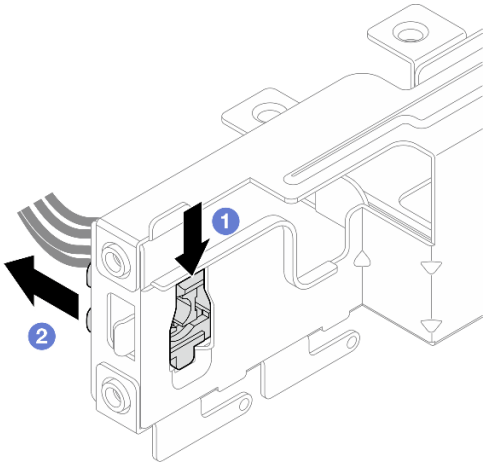

Figure 89. Removing the power button with LED

After you finish

1. Install a replacement unit. See "Install the power button with LED" on page 97.
2. If you are instructed to return the component or optional device, follow all packaging instructions, and use any packaging materials for shipping that are supplied to you.

Demo video

https://www.youtube.com/watch?v=hbr608Jg8VI

Install the power button with LED

Follow instructions in this section to install the power button with LED.

About this task

S002



CAUTION:
The power-control button on the device and the power switch on the power supply do not turn off the electrical current supplied to the device. The device also might have more than one power cord. To remove all electrical current from the device, ensure that all power cords are disconnected from the power source.

Attention:

- Read “Installation Guidelines” on page 1 and “Safety inspection checklist” on page 2 to ensure that you work safely.
- Touch the static-protective package that contains the component to any unpainted metal surface on the server; then, remove it from the package and place it on a static-protective surface.

Procedure

Step 1. Install the power button with LED.

a. ❶ Tilt the power button, and insert the tab on the bottom of the power button cable into the slot.

b. ❷ Push the power button into the slot until it snaps into place.

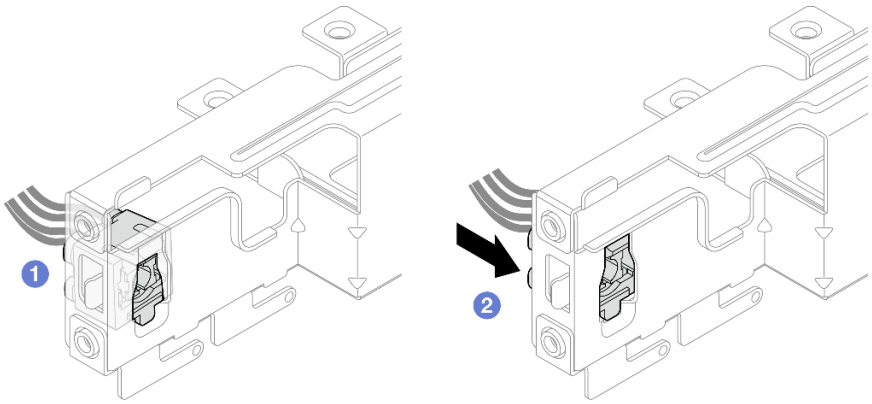

Figure 90. Installing the power button with LED

Step 2. Install the front I/O bracket.

a. ❶ There is a small tab on the right side of the front I/O bracket. Place the tab behind the front I/O bracket slot on the chassis.

b. 2 Align the guide hole and screw hole on the front I/O bracket with the guide pin and screw slot on the chassis; then, install the front I/O bracket to the chassis. Make sure the small tab on the right side of the front I/O bracket is placed behind the chassis.

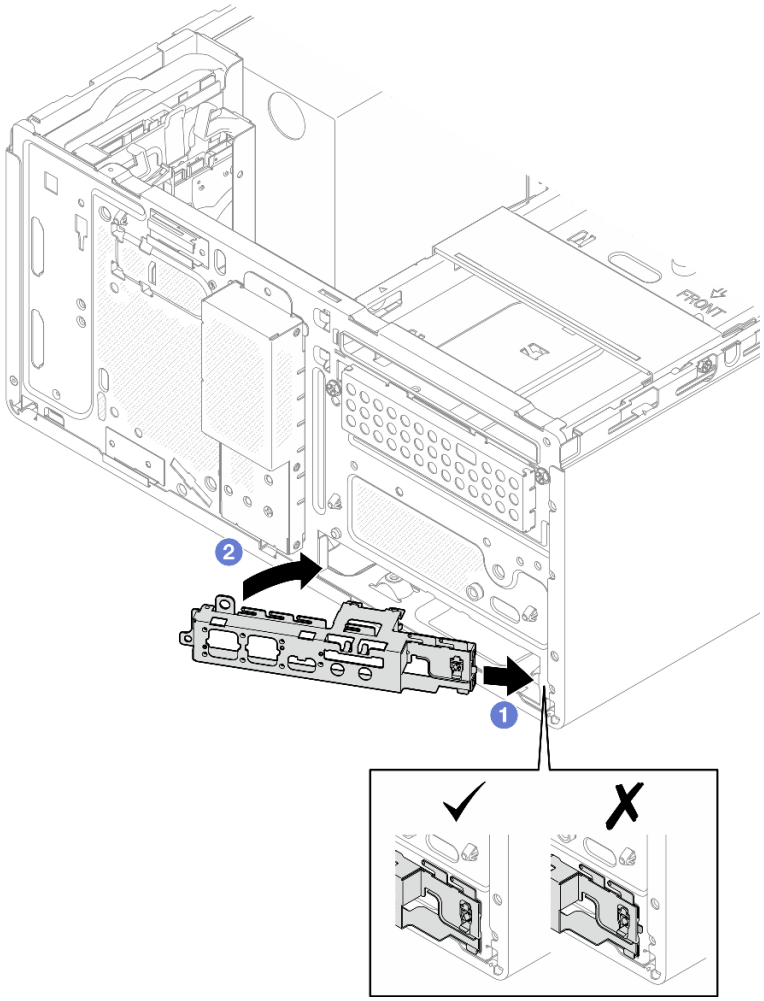

Figure 91. Installing the front I/O bracket to the chassis

c. Fasten the screw to secure the front I/O bracket to the chassis.

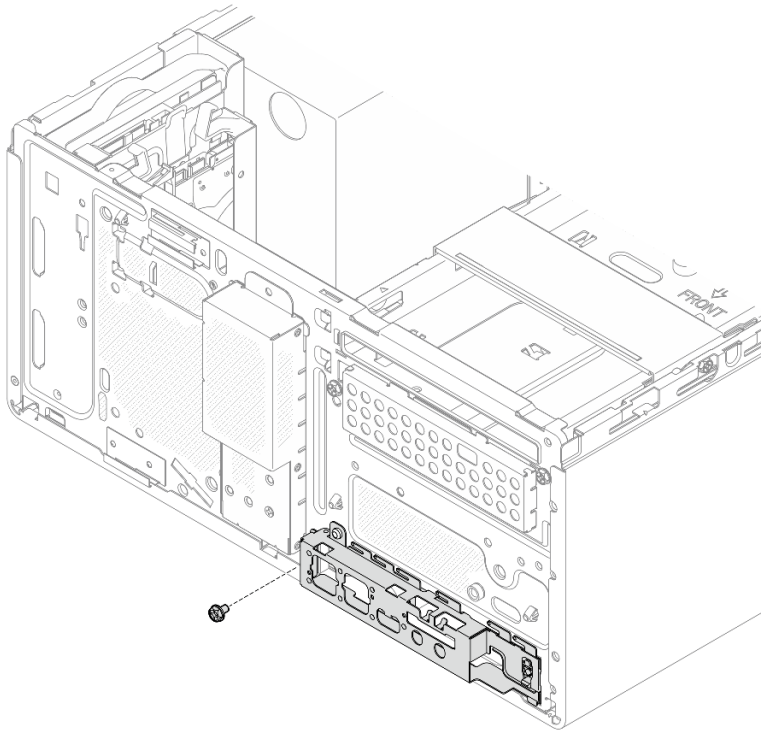

Figure 92. Securing the front I/O bracket to the chassis

Step 3. Connect the power button cable to the system board. See Chapter 2 “Internal cable routing” on page 129.

After you finish

1. Reinstall the front bezel. See “Install the front bezel” on page 68.
2. Complete the parts replacement. See “Complete the parts replacement” on page 126.

Demo video

https://www.youtube.com/watch?v=h68rtGFRHIU

Power supply unit replacement

Follow instructions in this section to remove and install the power supply unit.

Remove the power supply unit

Follow instructions in this section to remove the power supply unit.

About this task

S001



DANGER

Electrical current from power, telephone, and communication cables is hazardous.
To avoid a shock hazard:

- **Connect all power cords to a properly wired and grounded electrical outlet/source.**
- **Connect any equipment that will be attached to this product to properly wired outlets/sources.**
- **When possible, use one hand only to connect or disconnect signal cables.**
- **Never turn on any equipment when there is evidence of fire, water, or structural damage.**
- **The device might have more than one power cord, to remove all electrical current from the device, ensure that all power cords are disconnected from the power source.**

S002

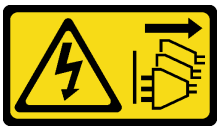

CAUTION:
The power-control button on the device and the power switch on the power supply do not turn off the electrical current supplied to the device. The device also might have more than one power cord. To remove all electrical current from the device, ensure that all power cords are disconnected from the power source.

S035

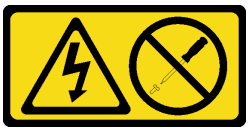

CAUTION:
Never remove the cover on a power supply or any part that has this label attached. Hazardous voltage, current, and energy levels are present inside any component that has this label attached. There are no serviceable parts inside these components. If you suspect a problem with one of these parts, contact a service technician.

Attention:

- Read “Installation Guidelines” on page 1 and “Safety inspection checklist” on page 2 to ensure that you work safely.
- Power off the server and peripheral devices and disconnect the power cords and all external cables. See “Power off the server” on page 6.
- If the server is in a rack, remove it from the rack. See “Remove the server from rack” on page 6.
- Remove any locking device that secures the server, such as a Kensington lock or a padlock.
- Place the server on its side with the cover up.

Procedure

Step 1. Make preparation for this task.

a. Remove the server cover. See “Remove the server cover” on page 118.

Attention: The heat sink and processor could be very hot. To avoid burning yourself, wait for a few minutes after turning off the server before you remove the server cover.

b. If applicable, remove the simple-swap drive (bay 0-1). See “Remove a simple-swap drive (bay 0-1)” on page 16.

c. If applicable, remove the simple-swap drive cage (bay 0-1). See “Remove the drive cage (bay 0-1)” on page 25.

Step 2. Disconnect the processor power cable and system power cable from the system board.

Attention: To avoid damaging the system board, make sure to follow the instructions in Chapter 2 “Internal cable routing” on page 129 when disconnecting cables from the system board.

Step 3. From the outside of the chassis, remove the four screws that secure the power supply unit to the chassis.

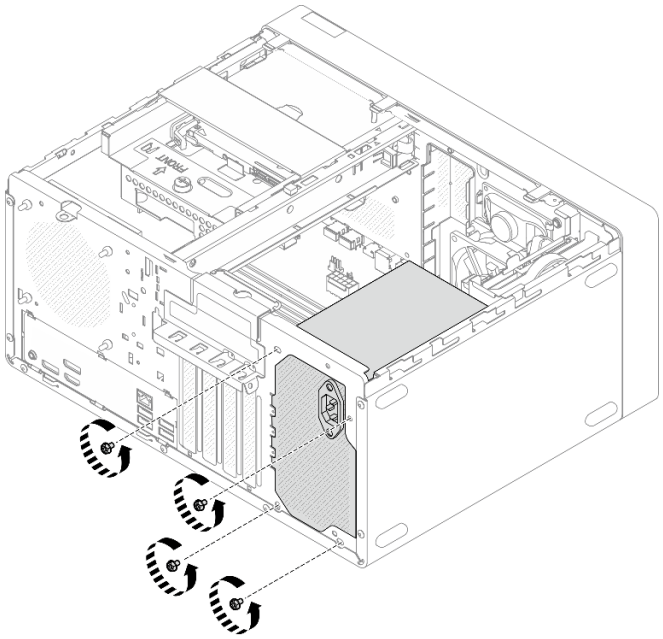

Figure 93. Removing the screws securing the power supply unit

Step 4. Remove the power supply unit from the chassis.

a. ❶ Press the release tab to disengage the power supply unit from the chassis.

b. ❶ Slide out the power supply unit; then, lift it out of the chassis.

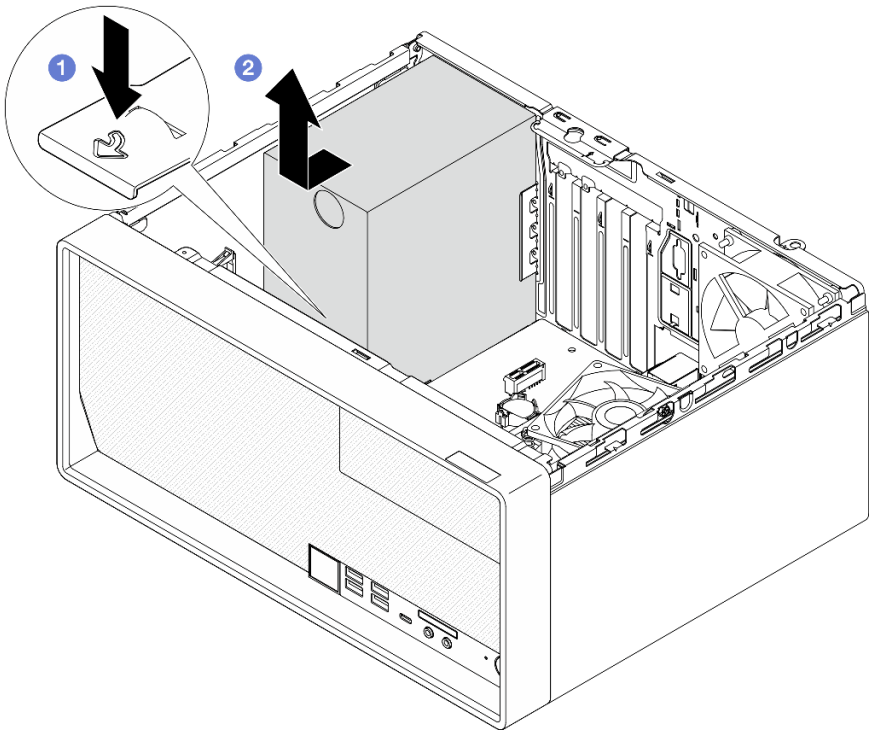

Figure 94. Removing the power supply unit

After you finish

1. Install a replacement unit. See “Install the power supply unit” on page 102.
2. If you are instructed to return the component or optional device, follow all packaging instructions, and use any packaging materials for shipping that are supplied to you.

Demo video

https://www.youtube.com/watch?v=_FTWRagoNmQ

Install the power supply unit

Follow instructions in this section to install the power supply unit.

About this task

S001



DANGER

Electrical current from power, telephone, and communication cables is hazardous.
To avoid a shock hazard:

- **Connect all power cords to a properly wired and grounded electrical outlet/source.**
- **Connect any equipment that will be attached to this product to properly wired outlets/sources.**
- **When possible, use one hand only to connect or disconnect signal cables.**
- **Never turn on any equipment when there is evidence of fire, water, or structural damage.**
- **The device might have more than one power cord, to remove all electrical current from the device, ensure that all power cords are disconnected from the power source.**

S002



CAUTION:
The power-control button on the device and the power switch on the power supply do not turn off the electrical current supplied to the device. The device also might have more than one power cord. To remove all electrical current from the device, ensure that all power cords are disconnected from the power source.

S035

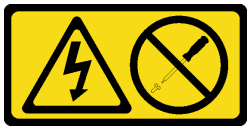

CAUTION:
Never remove the cover on a power supply or any part that has this label attached. Hazardous voltage, current, and energy levels are present inside any component that has this label attached. There are no serviceable parts inside these components. If you suspect a problem with one of these parts, contact a service technician.

Attention:

- Read “Installation Guidelines” on page 1 and “Safety inspection checklist” on page 2 to ensure that you work safely.
- Touch the static-protective package that contains the component to any unpainted metal surface on the server; then, remove it from the package and place it on a static-protective surface.
- Make sure the type of power supply is applicable to server drive configuration. See “Technical Specifications” in *User Guide* or *System Configuration Guide* for more information.

Procedure

Step 1. Lower the power supply unit into the chassis, and slide it toward the opening on the rear side of chassis until the release tab snaps into place.

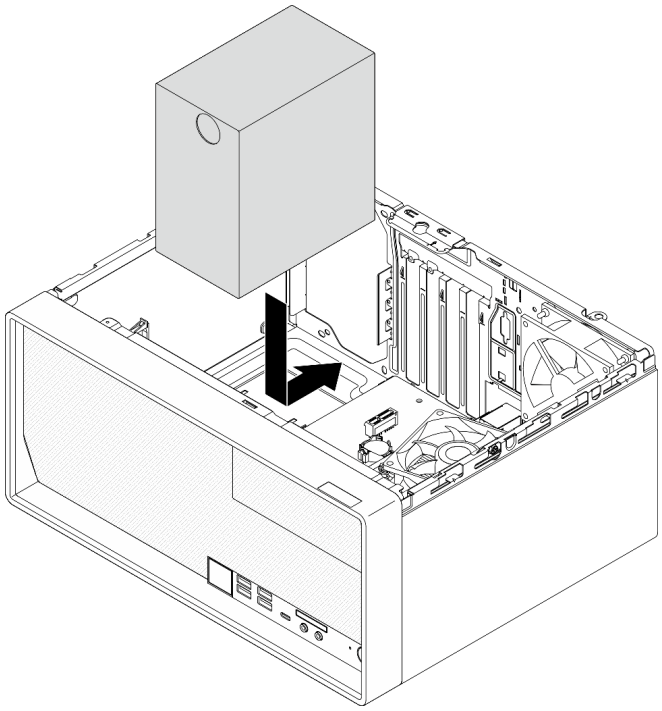

Figure 95. Installing the power supply unit to the chassis

Step 2. From the outside of the chassis, fasten the four screws to secure the power supply unit to the chassis.

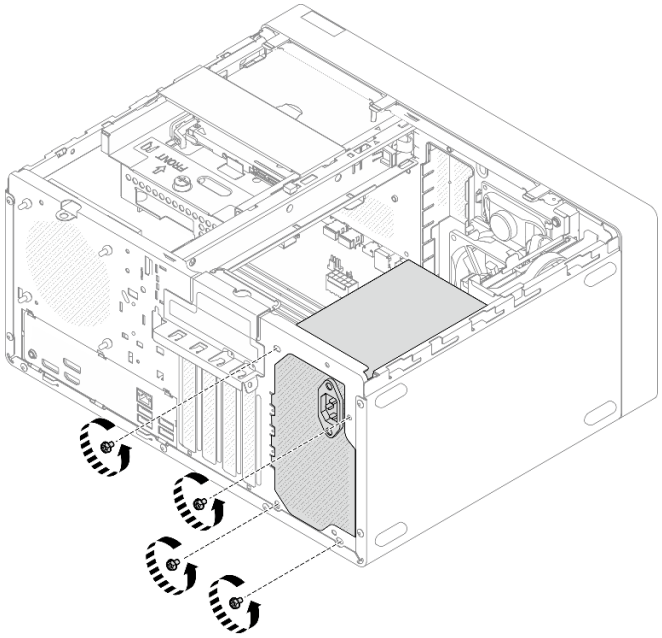

Figure 96. Securing the power supply unit to the chassis

Step 3. Connect the processor power cable and system power cable to the system board. See Chapter 2 “Internal cable routing” on page 129.

After you finish

1. Install the drive cage and drive. See “Simple-swap drive and drive cage replacement (bay 0-1)” on page 16.
2. Complete the parts replacement. See “Complete the parts replacement” on page 126.

Demo video

https://www.youtube.com/watch?v=fgtcBsGoEZk

Processor replacement (trained technician only)

Follow instructions in this section to remove and install the processor.

Important: This task must be operated by trained technicians that are certified by Lenovo Service. Do not attempt to remove or install the part without proper training and qualification.

Attention: Before reusing a processor or heat sink, make sure you use Lenovo proven alcohol cleaning pad and thermal grease.

Remove the processor (trained technician only)

Follow instructions in this section to remove the processor. The procedure must be executed by a trained technician.

About this task

S002

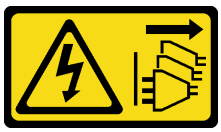

CAUTION:
The power-control button on the device and the power switch on the power supply do not turn off the electrical current supplied to the device. The device also might have more than one power cord. To remove all electrical current from the device, ensure that all power cords are disconnected from the power source.

Attention:

- Read “Installation Guidelines” on page 1 and “Safety inspection checklist” on page 2 to ensure that you work safely.
- Power off the server and peripheral devices and disconnect the power cords and all external cables. See “Power off the server” on page 6.
- If the server is in a rack, remove it from the rack. See “Remove the server from rack” on page 6.
- Remove any locking device that secures the server, such as a Kensington lock or a padlock.
- Place the server on its side with the cover up.
- Make sure to manually record the UEFI settings before processor removal because the system will load default UEFI settings when the processor is removed.

Procedure

Step 1. Make preparation for this task.

a. Remove the server cover. See “Remove the server cover” on page 118.

Attention: The heat sink and processor could be very hot. To avoid burning yourself, wait for a few minutes after turning off the server before you remove the server cover.

b. If applicable, remove the ODD+bay 2 drive cage assembly (see "Remove an optical drive cage" on page 57) or remove the bay 2+bay 3 drive cage assembly (see "Remove the drive cage (bay 3)" on page 46).

c. Remove the heat sink and fan module. See "Remove the heat sink and fan module (trained technician only)" on page 69.

Step 2. Remove the processor.

a. ❶ Gently pull the handle away from the processor retainer.

b. ❷ Lift the handle.

c. ❸ Lift the socket retainer to the fully open position as illustrated.

d. ❹ Hold the processor by both sides and gently lift it away from the processor socket.

Notes:

1. Do not touch the gold contacts on the bottom of the processor.
2. Keep the processor socket clean from any object to prevent possible damages.

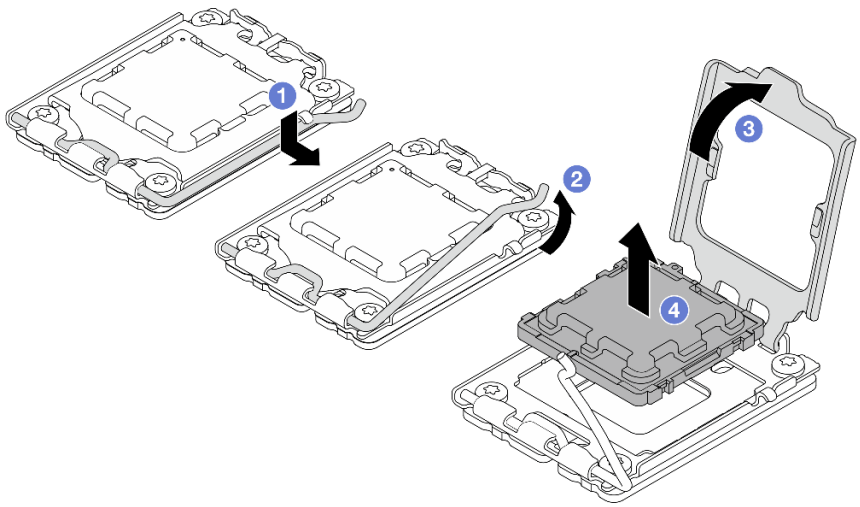

Figure 97. Removing the processor

After you finish

After removing the processor, perform one of the following tasks immediately:

- Install the replacement processor.
  1. Install the replacement processor to the system board. See "Install the processor (trained technician only)" on page 107.
  2. Package the defective processor that was removed, and return it to Lenovo. To prevent any shipping damage, reuse the packaging of the new processor, and follow all available packaging instructions.
- Install the processor that you removed to the replacement system board.
  1. Install the removed processor to the replacement system board. See "Install the processor (trained technician only)" on page 107.

2. Package the defective system board, and return it to Lenovo. To prevent any shipping damage, reuse the packaging of the new system board, and follow all available packaging instructions.

Demo video

https://www.youtube.com/watch?v=yPVzSTWPgrk

Install the processor (trained technician only)

Follow instructions in this section to install the processor. The procedure must be executed by a trained technician.

About this task

S002

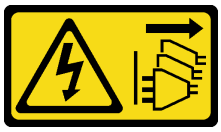

CAUTION:
The power-control button on the device and the power switch on the power supply do not turn off the electrical current supplied to the device. The device also might have more than one power cord. To remove all electrical current from the device, ensure that all power cords are disconnected from the power source.

Attention:

- Read “Installation Guidelines” on page 1 and “Safety inspection checklist” on page 2 to ensure that you work safely.
- Touch the static-protective package that contains the component to any unpainted metal surface on the server; then, remove it from the package and place it on a static-protective surface.
- Before reusing a processor that was removed from another system board, wipe the thermal grease from the processor with an alcohol cleaning pad, and dispose of the cleaning pad after all of the thermal grease is removed.

  Note: If you are applying new thermal grease on the top of the processor, make sure to do it after the alcohol has fully evaporated.
- Apply the thermal grease on the top of the processor with syringe by forming four uniformly spaced dots, while each dot consists of about 0.1 ml of thermal grease.

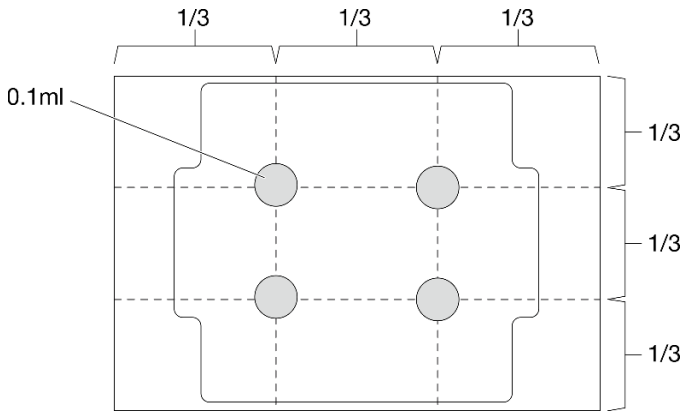

Figure 98. Proper shape of the thermal grease

Procedure

Step 1. Hold the processor by both sides, and align the following:

1. Align 1 the small notches on the processor with 2 the tabs on the socket.
2. Align 3 the small triangle of the processor with 4 the triangular mark on the socket.

Then, gently lower the processor evenly into the socket.

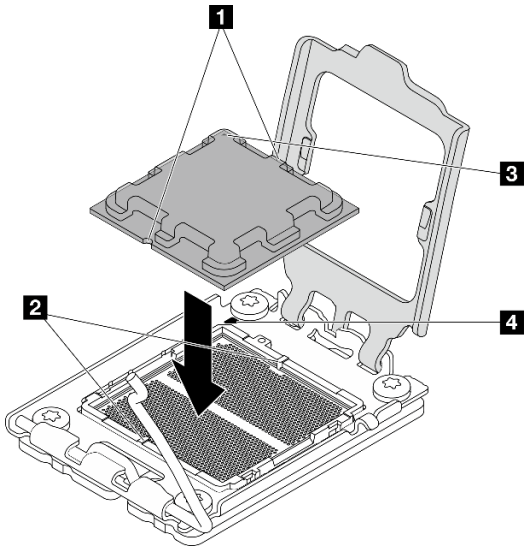

Figure 99. Installing the processor

Step 2. Close the processor retainer, and push the handle to the locked position.

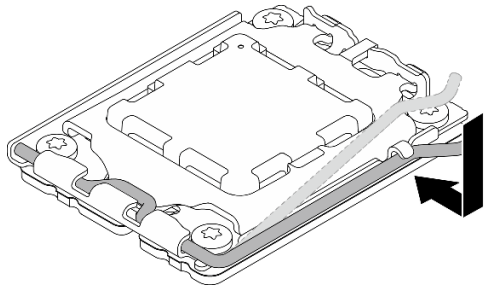

Figure 100. Closing the processor retainer

After you finish

1. Install the heat sink and the fan module. See “Install the heat sink and fan module (trained technician only)” on page 71.
2. If applicable, install the ODD+bay 2 drive cage assembly (see “Install the optical drive cage” on page 59) or install the bay 2+bay 3 drive cage assembly (see “Install the drive cage (bay 3)” on page 48).
3. Complete the parts replacement. See “Complete the parts replacement” on page 126.
4. (For China only) If the message “The system detects a new processor installed or fTPM NVRAM data mismatched.” is displayed after the server is turned on, complete the following steps to clear fTPM:
   a. Back up the security data or recovery key before clearing fTPM.
   b. Press **F1** to start the Setup Utility program.
   c. Select **Security**.
   d. Set **Reset fTPM** to **Enabled**.
   e. Restart the server.
5. After replacing the processor, make sure to reconfigure the server and reset system date and time.

Demo video

https://www.youtube.com/watch?v=9k154qBwPhQ

System board replacement (trained technician only)

Follow instructions in this section to remove and install the system board.

Important: This task must be operated by trained technicians that are certified by Lenovo Service. Do not attempt to remove or install the part without proper training and qualification.

CAUTION:
Hazardous moving parts. Keep fingers and other body parts away.

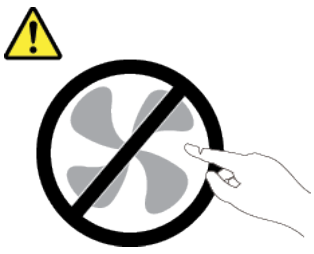

CAUTION:



The heat sinks and processors might be very hot. Turn off the server and wait several minutes to let the server cool before removing the server cover.

Remove the system board

Follow instructions in this section to remove the system board. The procedure must be executed by a trained technician.

About this task

S002

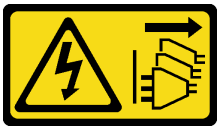

CAUTION:
The power-control button on the device and the power switch on the power supply do not turn off the electrical current supplied to the device. The device also might have more than one power cord. To remove all electrical current from the device, ensure that all power cords are disconnected from the power source.

Important:

- This task must be operated by trained technicians that are certified by Lenovo Service. Do no attempt to remove or install the part without proper training and qualification.
- When removing the memory modules, label the slot number on each memory module, remove all the memory modules from the system board, and set them aside on a static-protective surface for reinstallation.
- **When disconnecting cables, make a list of each cable and record the connectors the cable is connected to, and use the record as a cabling checklist after installing the new system board.**

Attention:

- Read “Installation Guidelines” on page 1 and “Safety inspection checklist” on page 2 to ensure that you work safely.
- Power off the server and peripheral devices and disconnect the power cords and all external cables. See “Power off the server” on page 6.
- If the server is in a rack, remove it from the rack. See “Remove the server from rack” on page 6.
- Remove any locking device that secures the server, such as a Kensington lock or a padlock.
- Place the server on its side with the cover up.

Procedure

Step 1. Make preparation for this task.

a. Remove the server cover. See “Remove the server cover” on page 118.

b. Remove the front bezel. See “Remove the front bezel” on page 67.

c. If applicable, remove the ODD+bay 2 drive cage assembly (see “Remove an optical drive cage” on page 57) or remove the bay 2+bay 3 drive cage assembly (see “Remove the drive cage (bay 3)” on page 46).

d. Remove the cage bar. See step 3 in “Remove the server cover” on page 118.

e. If applicable, remove the rear fan. See “Remove the fan (front and rear)” on page 62.

f. If applicable, remove the M.2 drive. See “Remove an M.2 drive” on page 73.

g. If applicable, remove the PCIe adapters. See “Remove a PCIe adapter” on page 88.

h. Remove the memory modules. See “Remove a memory module” on page 80.

i. Remove the heat sink and fan module. See “Remove the heat sink and fan module (trained technician only)” on page 69.

j. Remove the processor. See “Remove the processor (trained technician only)” on page 105.

Step 2. Remove the screw that secures the front I/O bracket to the chassis.

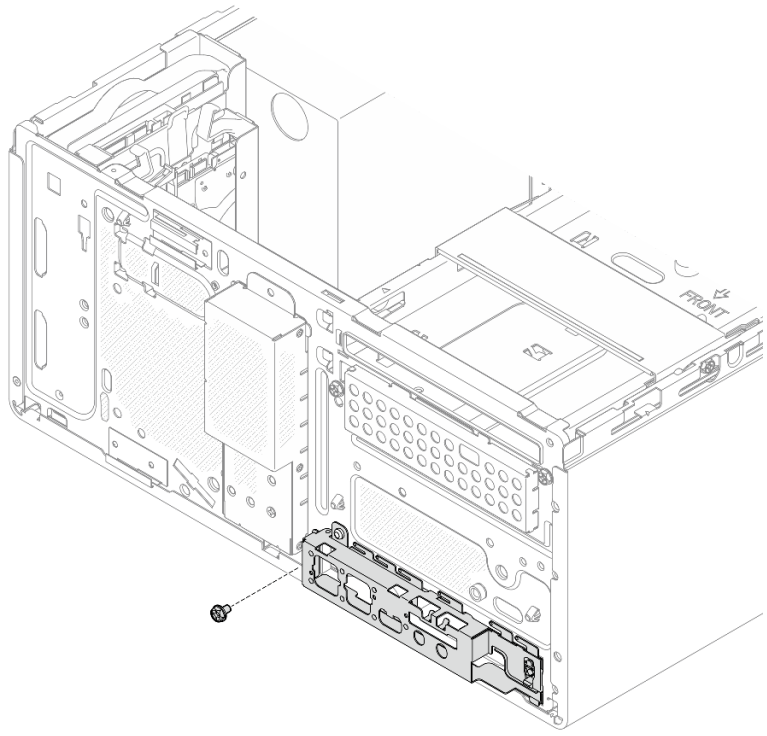

Figure 101. Removing the screw that secures the front I/O bracket

Step 3. Remove the front I/O bracket.

a. ❶ Rotate the left end of the front I/O bracket away from the chassis.

b. ❷ Remove the front I/O bracket from the chassis.

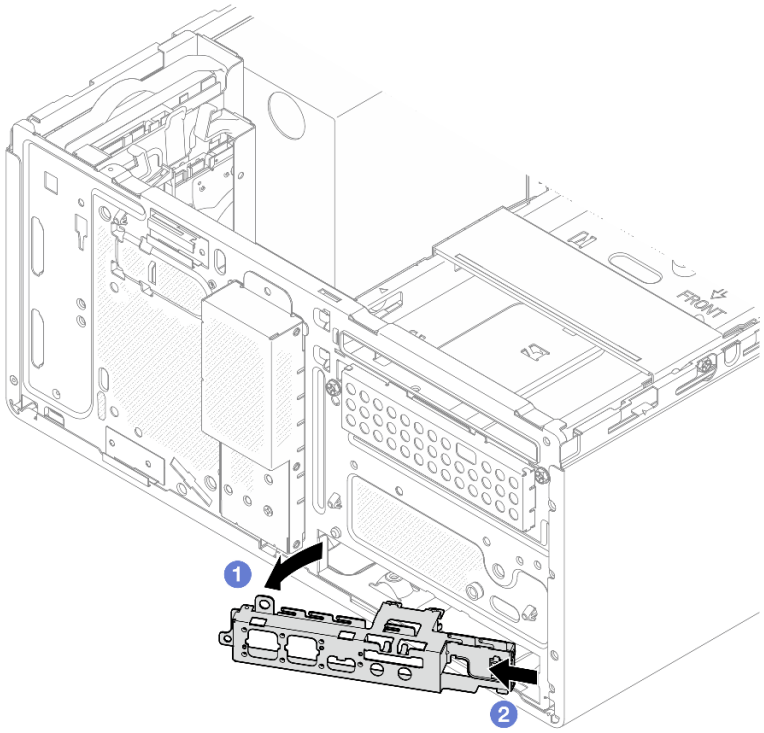

Figure 102. Removing the front I/O bracket from the chassis

Step 4. Disconnect all the cables connected to the system board.

Attention: To avoid damaging the system board, make sure to follow the instructions in Chapter 2 "Internal cable routing" on page 129 when disconnecting cables from the system board.

Step 5. Remove the nine screws that secure the system board in the sequence shown in the illustration below. Keep the screws for future use.

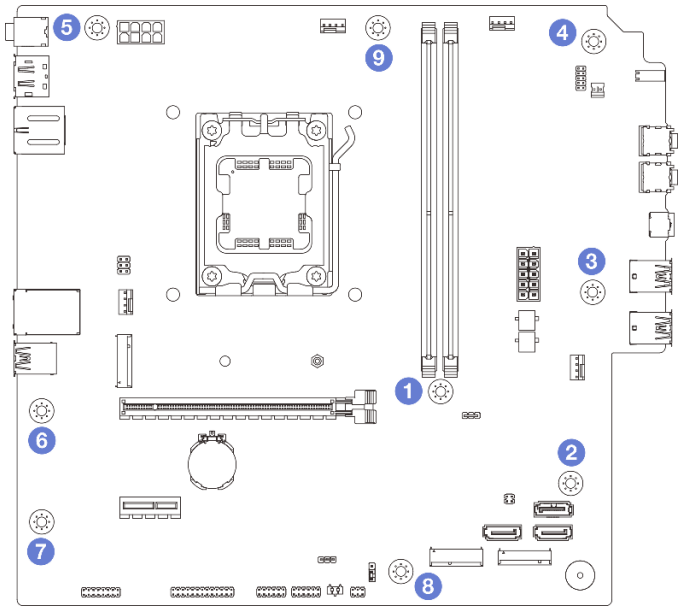

Figure 103. System-board screws removal sequence

Step 6. Remove the system board from the chassis.

a. 1 Slide the system board toward the front of the server to release the serial port connector from the chassis.

b. 2 Gently grasp the system board by the edges; then, tilt the system board, and remove it from the chassis.

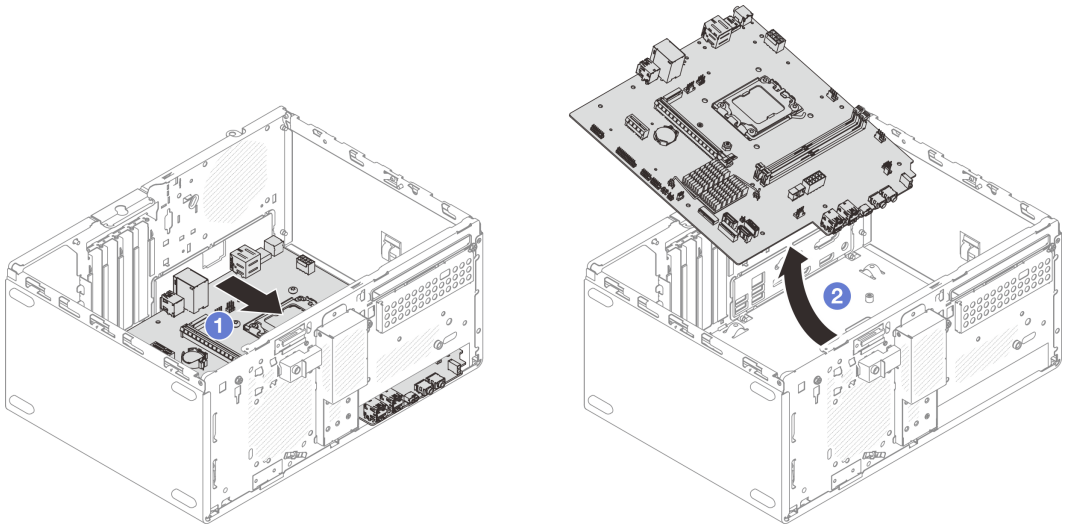

Figure 104. Removing the system board from the chassis

After you finish

- If you are instructed to return the component or optional device, follow all packaging instructions, and use any packaging materials for shipping that are supplied to you.

  Important: Before you return the system board, make sure that you install the processor socket covers from the new system board. To replace a processor socket cover:

1. Take a socket cover from the processor socket assembly on the new system board, and orient it correctly above the processor socket assembly on the removed system board.
2. Gently press down the socket cover legs to the processor socket assembly. You might hear a click when the socket cover is securely attached.

   Note: Press on the edges to avoid damage to the socket pins.
3. **Make sure** that the socket cover is securely attached to the processor socket assembly.

- If you plan to recycle the component, see “Disassemble the system board for recycle” in *User Guide*.

Demo video

https://www.youtube.com/watch?v=lurLII4N9gE

Install the system board

Follow instructions in this section to install the system board. The procedure must be executed by a trained technician.

About this task

S002

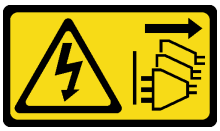

CAUTION:
The power-control button on the device and the power switch on the power supply do not turn off the electrical current supplied to the device. The device also might have more than one power cord. To remove all electrical current from the device, ensure that all power cords are disconnected from the power source.

Attention:

- Read “Installation Guidelines” on page 1 and “Safety inspection checklist” on page 2 to ensure that you work safely.
- Touch the static-protective package that contains the drive to any unpainted metal surface on the server; then, remove the drive from the package and place it on a static-protective surface.

Firmware and driver download: You might need to update the firmware or driver after replacing a component.

- Go to https://datacentersupport.lenovo.com/products/servers/thinksystem/st45v3/downloads/driver-list/ to see the latest firmware and driver updates for your server.
- Go to “Update the firmware” in *User Guide* or *System Configuration Guide* for more information on firmware updating tools.

Procedure

Step 1. Install the system board.

a. ① Tilt the system board, and align the connectors with the corresponding opening on the front of the chassis. Then, gently lower the system board into the chassis, and insert the connectors into the slot on the front of the chassis.

b. 2 Slide the system board toward the rear of the chassis until the system board is secured in place.

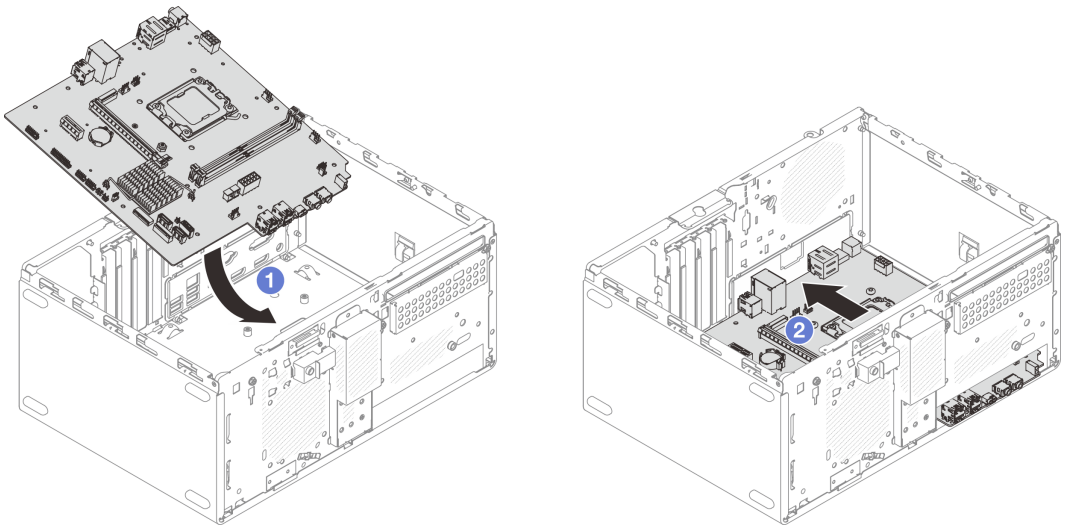

Figure 105. Installing the system board into the chassis

Step 2. Secure the system board to the chassis with nine screws in the sequence shown in the illustration below.

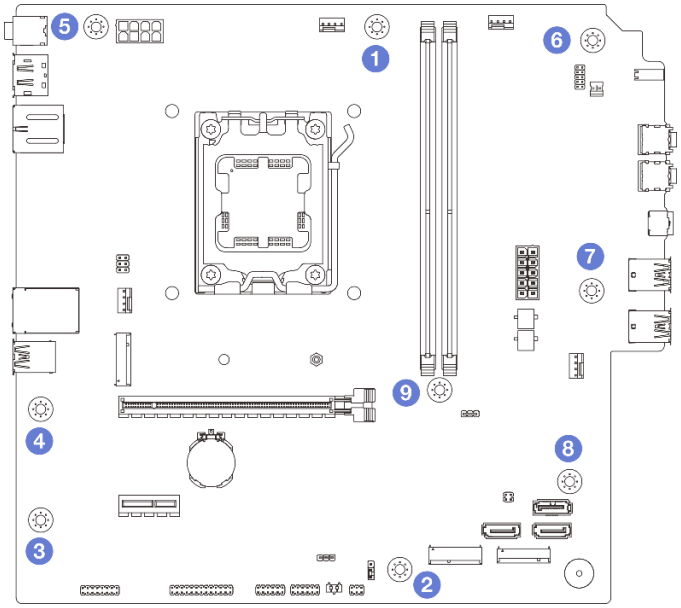

Figure 106. System-board screws installation sequence

After you finish

Note: Make sure the CMOS battery is installed on the system board. See "Install the CMOS battery (CR2032)" on page 14.

1. Install the front I/O bracket.
   a. 1 There is a small tab on the right side of the front I/O bracket. Place the tab behind the front I/O bracket slot on the chassis.

b. ❷ Align the guide hole and screw hole on the front I/O bracket with the guide pin and screw slot on the chassis; then, install the front I/O bracket to the chassis.

Note: Make sure the small tab on the right side of the front I/O bracket is placed behind the chassis.

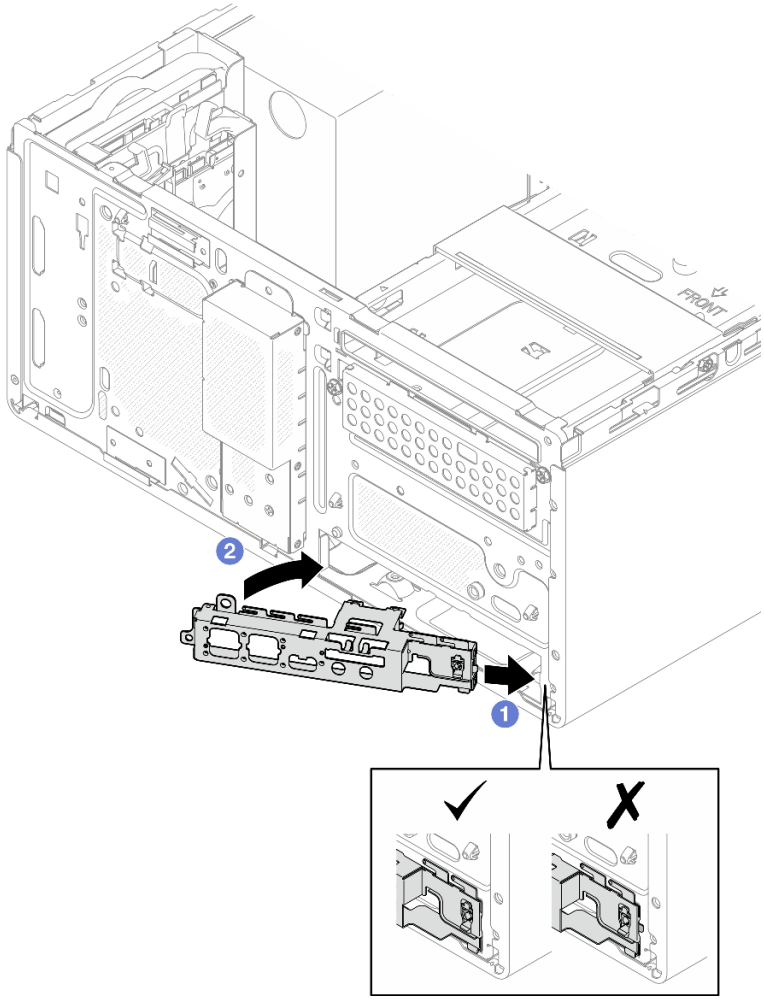

Figure 107. Installing the front I/O bracket to the chassis

c. Fasten the screw to secure the front I/O bracket to the chassis.

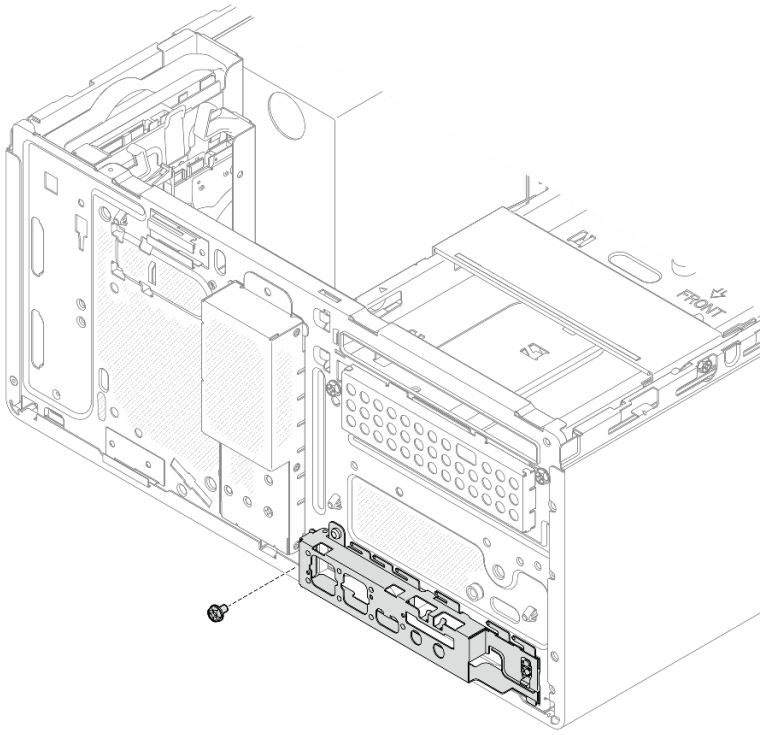

Figure 108. Securing the front I/O bracket to the chassis

2. Install the processor. See “Install the processor (trained technician only)” on page 107.
3. Install the heat sink and fan module. See “Install the heat sink and fan module (trained technician only)” on page 71.
4. Install the memory module. See “Install a memory module” on page 83.
5. If applicable, install the PCIe adapter. See “Install a PCIe adapter” on page 91.
6. If applicable, install the M.2 drive. See “Install an M.2 drive” on page 75.
7. If applicable, install the rear fan. See “Install the fan (front and rear)” on page 65.
8. Install the cage bar. See step 3 in “Install the server cover” on page 120.
9. If applicable, install the ODD+bay 2 drive cage assembly (see “Install the optical drive cage” on page 59) or install the bay 2+bay 3 drive cage assembly (see “Install the drive cage (bay 3)” on page 48).
10. Install the front bezel. See “Install the front bezel” on page 68.
11. Reconnect all the cables that were disconnected.
12. Complete the parts replacement. See “Complete the parts replacement” on page 126.
13. Update the vital product data (VPD). See ST45 V3 Tip TT2403. Machine type number and serial number can be found on the ID label. See “Identify the server” in *User Guide* or *System Configuration Guide*.
14. Optionally, enable UEFI Secure Boot. See “Enable UEFI Secure Boot” on page 118.
15. After replacing the system board, make sure to reconfigure the server and reset system date and time.

Demo video

https://www.youtube.com/watch?v=MZ_z7Osz95M

Enable UEFI Secure Boot

Optionally, you can enable UEFI Secure Boot.

To enable UEFI Secure Boot, do as follows:

1. Start the server and press **F1** to access Setup Utility.
2. Select **Security → Secure Boot → Secure Boot**.
3. Set **Secure Boot** to **Enabled** and save the setting.

Note: If disabling UEFI Secure Boot is needed, set **Secure Boot** to **Disabled** in step 3.

Server cover replacement

Follow instructions in this section to remove and install the server cover.

Remove the server cover

Follow instructions in this section to remove the server cover.

About this task

S002

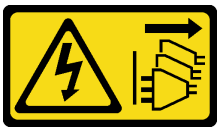

CAUTION:
The power-control button on the device and the power switch on the power supply do not turn off the electrical current supplied to the device. The device also might have more than one power cord. To remove all electrical current from the device, ensure that all power cords are disconnected from the power source.

S014



CAUTION:
Hazardous voltage, current, and energy levels might be present. Only a qualified service technician is authorized to remove the covers where the label is attached.

S033



CAUTION:
Hazardous energy present. Voltages with hazardous energy might cause heating when shorted with metal, which might result in spattered metal, burns, or both.

Attention:

- Read “Installation Guidelines” on page 1 and “Safety inspection checklist” on page 2 to ensure that you work safely.
- Power off the server and peripheral devices and disconnect the power cords and all external cables. See “Power off the server” on page 6.
- If the server is in a rack, remove it from the rack. See “Remove the server from rack” on page 6.
- Remove any locking device that secures the server, such as a Kensington lock or a padlock.
- Place the server on its side with the cover up.

Procedure

Step 1. Remove the server cover.

a. ❶ Use a screwdriver to remove the two screws that secure the server cover to the chassis.

b. ❷ Slide the server cover away from the front bezel, and lift it up from the chassis. Reserve the screws to be used for reinstalling the server cover.

Attention:

- The heat sink and processor could be very hot. To avoid burning yourself, wait for a few minutes after turning off the server before you remove the server cover.
- For proper cooling, always install the server cover before powering on the server. Operating the server without the cover properly installed might result in server component damage.

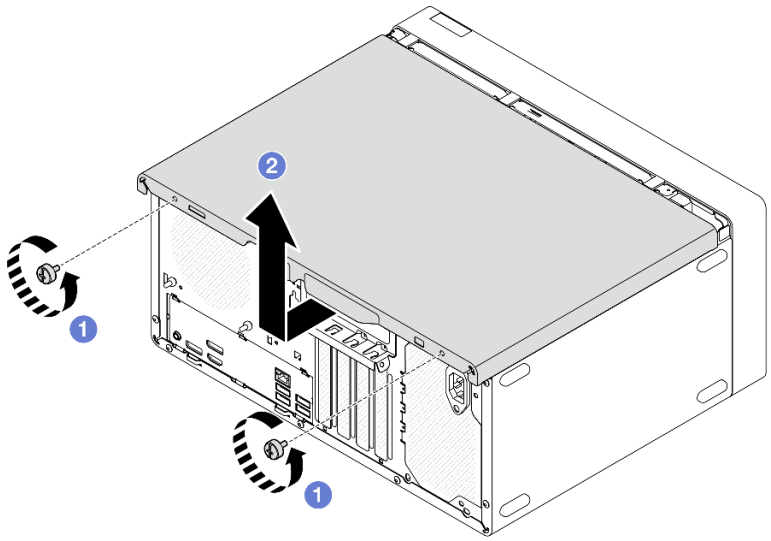

Figure 109. Removing the server cover

Step 2. If applicable, remove the ODD+bay 2 drive cage assembly (see “Remove an optical drive cage” on page 57) or remove the bay 2+bay 3 drive cage assembly (see “Remove the drive cage (bay 3)” on page 46). Then, remove the cage bar.

a. ❶ Push the latch on the cage bar until the cage bar is disengaged from the chassis.

b. ❷ Rotate the cage bar and remove it from the chassis.

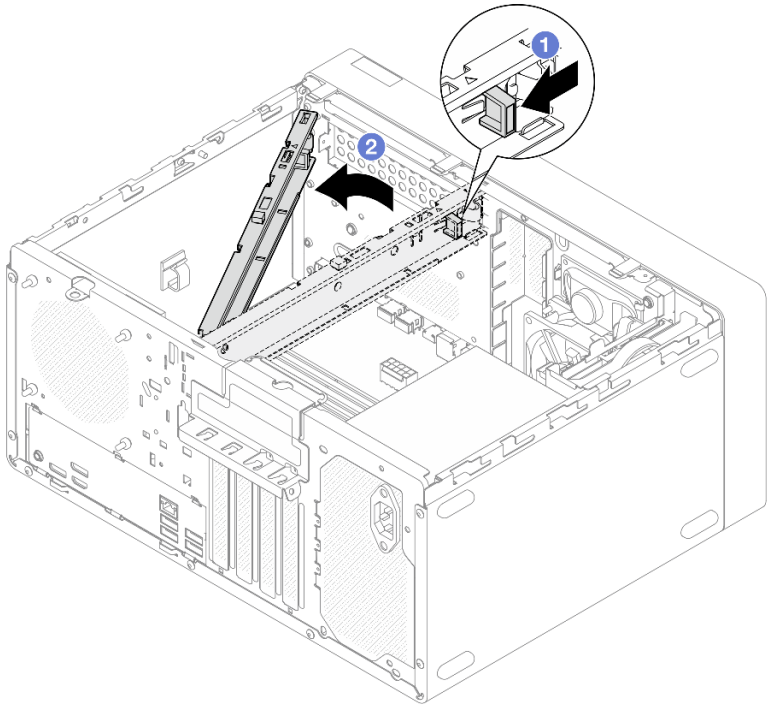

Figure 110. Removing the cage bar

After you finish

1. Install a replacement unit. See “Install the server cover” on page 120.
2. If you are instructed to return the component or optional device, follow all packaging instructions, and use any packaging materials for shipping that are supplied to you.

Demo video

https://www.youtube.com/watch?v=KUWXGt1rD6c

Install the server cover

Follow instructions in this section to install the server cover.

About this task

S002

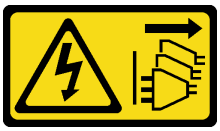

CAUTION:
The power-control button on the device and the power switch on the power supply do not turn off the electrical current supplied to the device. The device also might have more than one power cord. To remove all electrical current from the device, ensure that all power cords are disconnected from the power source.

S014



CAUTION:
Hazardous voltage, current, and energy levels might be present. Only a qualified service technician is authorized to remove the covers where the label is attached.

S033



CAUTION:
Hazardous energy present. Voltages with hazardous energy might cause heating when shorted with metal, which might result in spattered metal, burns, or both.

Attention:

- Read “Installation Guidelines” on page 1 and “Safety inspection checklist” on page 2 to ensure that you work safely.
- Ensure that all adapters and other components are installed and seated correctly, and that you have not left loose tools or parts inside the server.
- Ensure that all internal cables are correctly routed. See Chapter 2 “Internal cable routing” on page 129 for more information.
- If you are installing a new server cover, attach the service label to the inside of the new server cover if necessary.

  Note: A new server cover comes without a service label attached. If you need a service label, order it together with the new server cover. The service label is free of charge.

Procedure

Step 1. (Optional) Install the cage bar.

a. ❶ Insert the tabs on cage bar to the slots on the rear side of the chassis.

b. ❷ Align the tabs on the other end of the cage bar to the slots on the front side of the chassis, and rotate the cage bar toward the front of the chassis until the cage bar is secured in place.

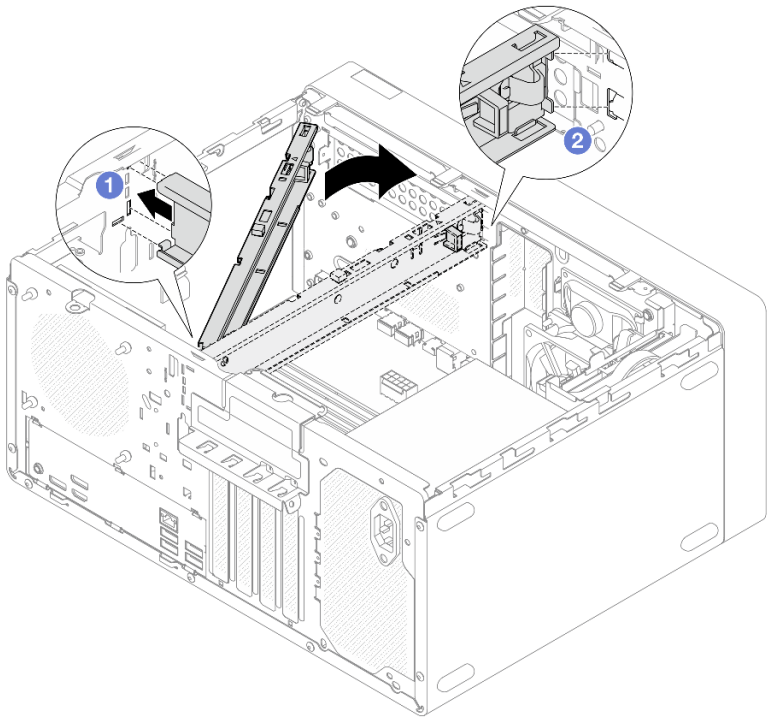

Figure 111. Installing the cage bar

Step 2. Install the server cover.

a. 1 Align the server cover to the slots on the side of the chassis. Ensure that all the tabs on the cover are engaged with the chassis properly; then, slide the cover towards the front bezel until it snaps in place.

b. 2 Use a screwdriver to fasten the two screws to secure the cover to the chassis.

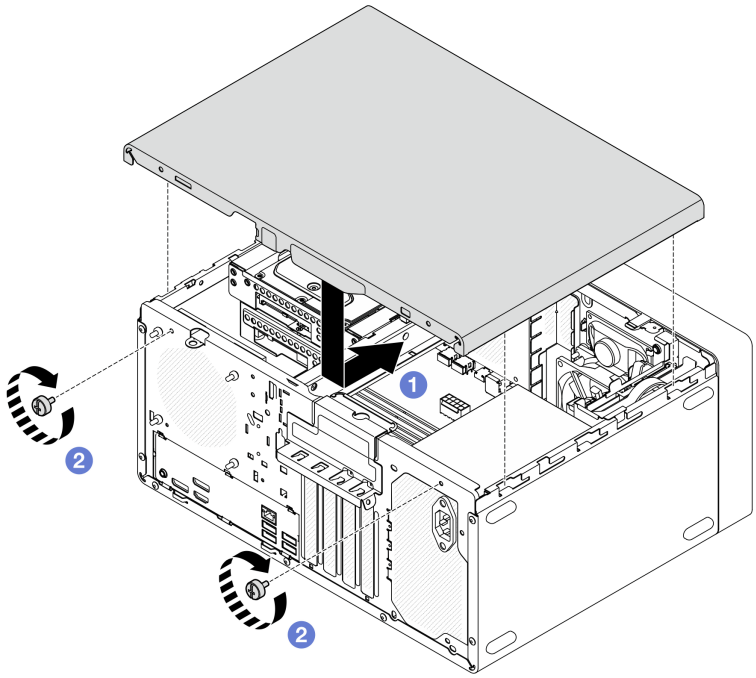

Figure 112. Installing the server cover

Demo video

https://www.youtube.com/watch?v=IZJc7x-gKO8

Thermal sensor replacement

Follow instructions in this section to remove and install the thermal sensor.

Remove the thermal sensor

Follow instructions in this section to remove the thermal sensor.

About this task

S002



CAUTION:
The power-control button on the device and the power switch on the power supply do not turn off the electrical current supplied to the device. The device also might have more than one power cord. To remove all electrical current from the device, ensure that all power cords are disconnected from the power source.

Attention:

- Read “Installation Guidelines” on page 1 and “Safety inspection checklist” on page 2 to ensure that you work safely.

- Power off the server and peripheral devices and disconnect the power cords and all external cables. See “Power off the server” on page 6.
- If the server is in a rack, remove it from the rack. See “Remove the server from rack” on page 6.
- Remove any locking device that secures the server, such as a Kensington lock or a padlock.
- Place the server on its side with the cover up.

Procedure

Step 1. Make preparation for this task.

a. Remove the server cover. See “Remove the server cover” on page 118.

Attention: The heat sink and processor could be very hot. To avoid burning yourself, wait for a few minutes after turning off the server before you remove the server cover.

b. Remove the front bezel. See “Remove the front bezel” on page 67.

c. Remove the front fan. See “Remove the fan (front and rear)” on page 62.

d. If applicable, remove the M.2 drive. See “Remove an M.2 drive” on page 73.

Step 2. Disconnect the thermal sensor cable from the system board.

Attention: To avoid damaging the system board, make sure to follow the instructions in Chapter 2 “Internal cable routing” on page 129 when disconnecting cables from the system board.

Step 3. Remove the thermal sensor.

a. ❶ Press the release tab on the thermal sensor to release it from the chassis.

b. ❷ Remove the thermal sensor from the chassis.

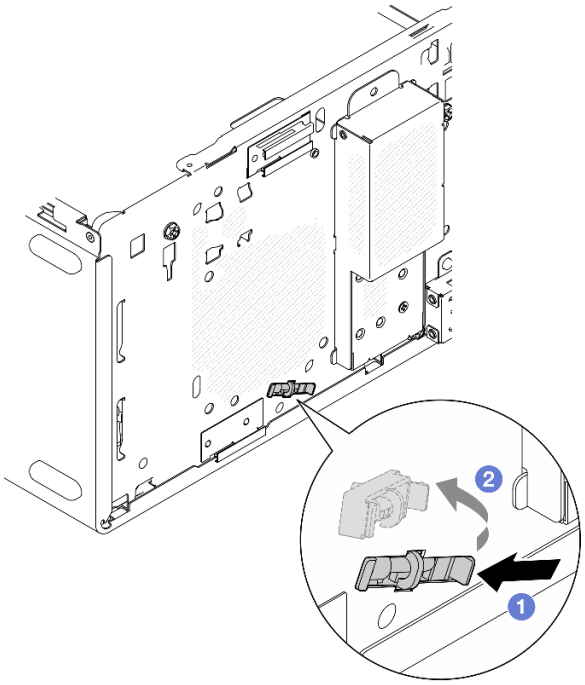

Figure 113. Removing the thermal sensor

After you finish

1. Install a replacement unit. See “Install the thermal sensor” on page 125.

2. If you are instructed to return the component or optional device, follow all packaging instructions, and use any packaging materials for shipping that are supplied to you.

Demo video

https://www.youtube.com/watch?v=pUPfSDYDLyc

Install the thermal sensor

Follow instructions in this section to install the thermal sensor.

About this task

S002



CAUTION:
The power-control button on the device and the power switch on the power supply do not turn off the electrical current supplied to the device. The device also might have more than one power cord. To remove all electrical current from the device, ensure that all power cords are disconnected from the power source.

Attention:

1. Read “Installation Guidelines” on page 1 and “Safety inspection checklist” on page 2 to ensure that you work safely.
2. Touch the static-protective package that contains the component to any unpainted metal surface on the server; then, remove it from the package and place it on a static-protective surface.

Procedure

Step 1. Install the thermal sensor.

a. ❶ From the inside of the chassis, attach the end of the thermal sensor to the corresponding slot on the front of the chassis.

b. ❷ From the inside of the chassis, push the thermal sensor into the slot.

c. ❸ Make sure the thermal sensor is secured in place.

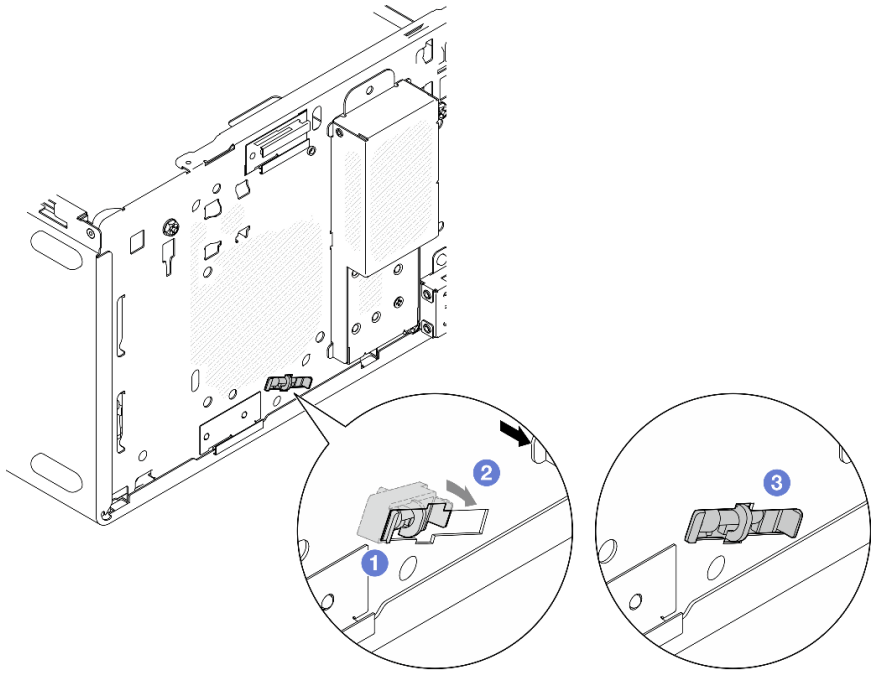

Figure 114. Installing the thermal sensor

Step 2. Connect the thermal sensor cable to the system board. See Chapter 2 “Internal cable routing” on page 129.

After you finish

1. If an M.2 drive was removed, reinstall the M.2 drive. See “Install an M.2 drive” on page 75.

   Note: The thermal sensor cable should be placed under the M.2 drive.
2. Reinstall the front fan. See “Install the fan (front and rear)” on page 65.
3. Reinstall the front bezel. See “Install the front bezel” on page 68.
4. Complete the parts replacement. See “Complete the parts replacement” on page 126.

Demo video

https://www.youtube.com/watch?v=0VwAVkVgAqE

Complete the parts replacement

Go through the checklist to complete parts replacement

To complete the parts replacement, do the following:

1. Ensure that all components have been reassembled correctly and that no tools or loose screws are left inside your server.
2. Ensure that the CMOS battery is installed on the system board. See “Install the CMOS battery (CR2032)” on page 14.
3. Properly route and secure the cables in the server. Refer to the cable connecting and routing information for each component.
4. Reinstall the server cover. See “Install the server cover” on page 120.

5. Reconnect the power cords and any cables that you removed.

   Note: To avoid component damage, connect all the other cables before connecting the power cords.
6. Power on the server and any peripheral devices. See “Power on the server” on page 6.
7. Update the server configuration.
   - Download and install the latest device drivers: http://datacentersupport.lenovo.com.
   - Update the system firmware. See “Update the firmware” in *User Guide* or *System Configuration Guide*.
   - Reconfigure the disk arrays if you have installed or removed a storage drive or a RAID adapter. See https://pubs.lenovo.com/lxpm-overview/ for the LXPM documentation compatible with your server.

Chapter 2. Internal cable routing

Some of the components in the server come with internal cables meant for specific connectors.

Cable routing guidelines

Before connecting the cables, read the following guidelines carefully:

- Turn off the server before you connect or disconnect any internal cables.
- Refer to the documentation that comes with any external devices for additional cabling instructions.
- Make use of the identifiers printed on the cables to locate the proper connectors.
- Ensure that the cable is not pinched and does not cover any connectors or obstruct any components on the system board.

Attention: Strictly observe the following instructions to avoid damaging cable sockets on the system board. Any damage to the cable sockets might require replacing the system board.

- Connect cable connectors vertically or horizontally in alignment with the orientations of the corresponding cable sockets, avoiding any tilt.
- To disconnect cables from the system board, do as follows:
  1. Press and hold all latches, release tabs, or locks on cable connectors to release the cable connectors.
  2. Remove the cable connectors vertically or horizontally in alignment with the orientations of the corresponding cable sockets, avoiding any tilt.

     Note: The cable connectors might look different from those in the illustration, but the removal procedure is the same.

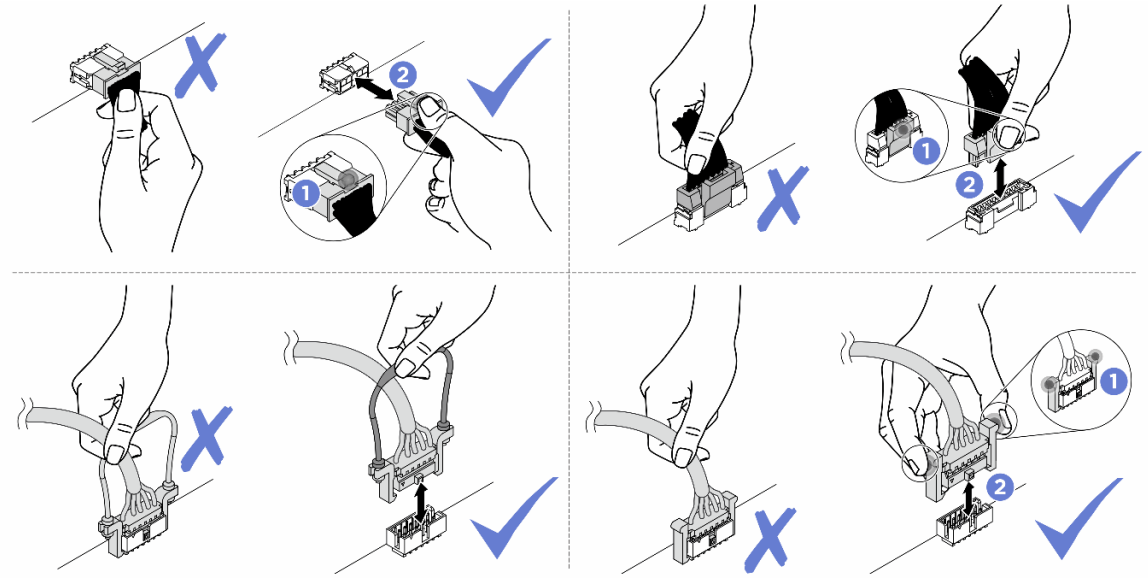

© Copyright Lenovo 2024, 2025

Cable routing for bay 0 drive

Follow the instructions in this section to learn how to do cable routing for the drive in bay 0.

For the system-board connector locations, see “System-board connectors” in *User Guide*.

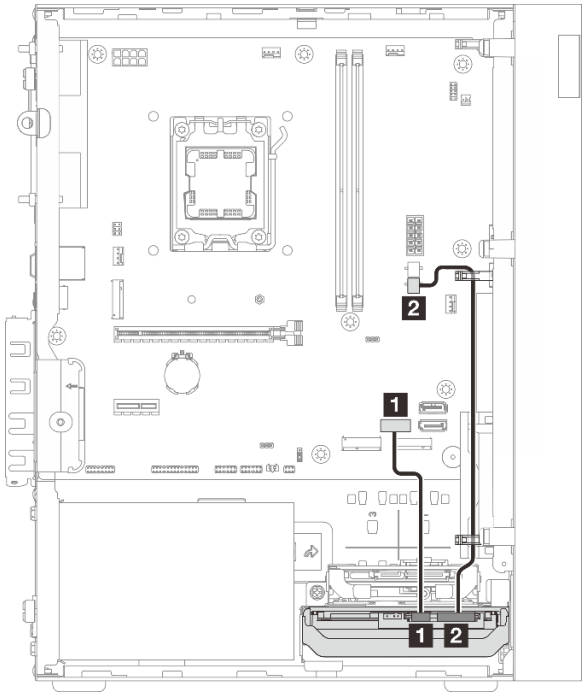

Figure 115. Cable routing for bay 0 drive

Table 3. Cable routing for bay 0 drive

From (bay 0 drive)	To (system board)	Cable
1 Signal connector	1 SATA 1 connector	7pin SATA to 7pin RA SATA cable, 185 mm
2 Power connector	2 SATA power 2 connector	4pin power cable, 300 mm/80 mm

Cable routing for bay 1 drive

Follow the instructions in this section to learn how to do cable routing for the drive in bay 1.

- “Cable routing for bay 1 drive when SATA 1 connector is occupied by bay 0 drive” on page 131
- “Cable routing for bay 1 drive when SATA 1 connector is not occupied” on page 132

For the system-board connector locations, see “System-board connectors” in *User Guide*.

Cable routing for bay 1 drive when SATA 1 connector is occupied by bay 0 drive

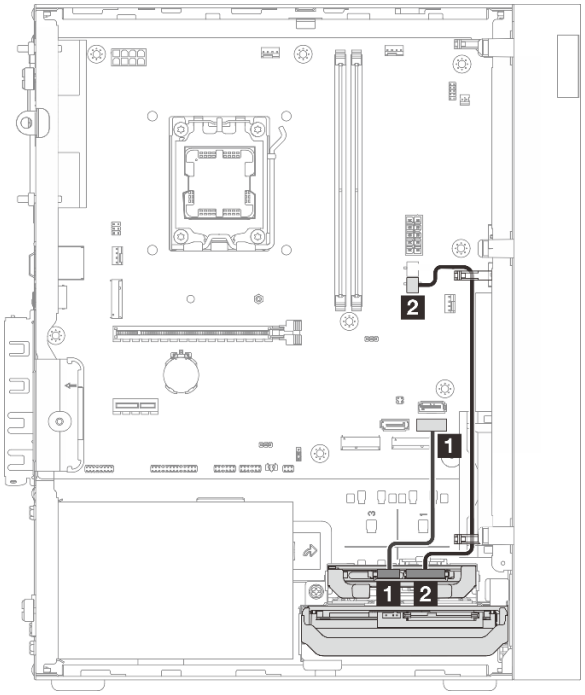

From (bay 1 drive)	To (system board)	Cable
1 Signal connector	1 SATA 2 connector	7pin SATA to 7pin RA SATA cable, 185 mm
2 Power connector	2 SATA power 2 connector	4pin power cable, 300 mm/80 mm

Cable routing for bay 1 drive when SATA 1 connector is not occupied

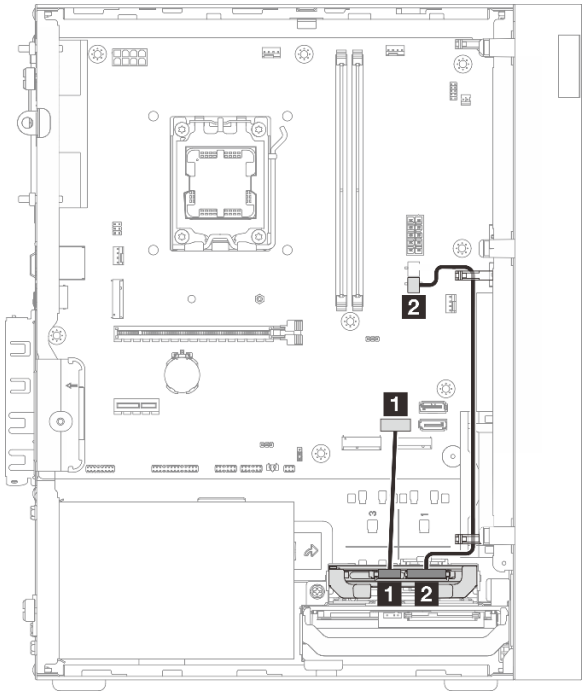

From (bay 1 drive)	To (system board)	Cable
1 Signal connector	1 SATA 1 connector	7pin SATA to 7pin RA SATA cable, 185 mm
2 Power connector	2 SATA power 2 connector	4pin power cable, 300 mm/80 mm

Cable routing for bay 2 drive

Follow the instructions in this section to learn how to do cable routing for the drive in bay 2.

- “Cable routing for bay 2 drive when SATA 2 connector is occupied by bay 1 drive” on page 133
- “Cable routing for bay 2 drive when SATA 2 connector is not occupied” on page 134

For the system-board connector locations, see “System-board connectors” in *User Guide*.

Cable routing for bay 2 drive when SATA 2 connector is occupied by bay 1 drive

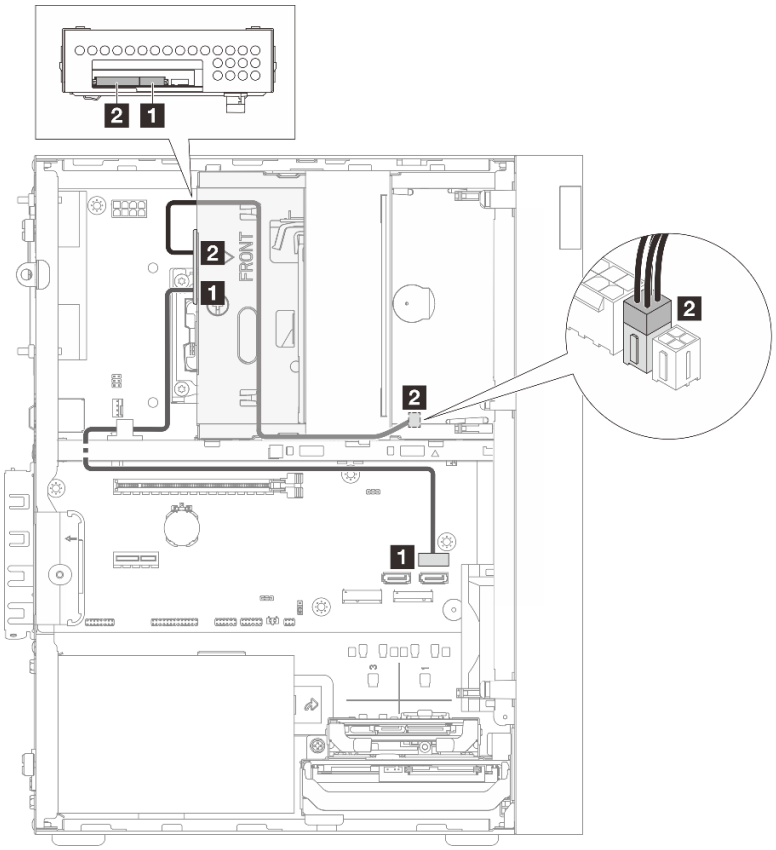

From (bay 2 drive)	To (system board)	Cable
1 Signal connector	1 SATA 3 connector	7pin SATA to 7pin Slim ODD SATA, 520 mm
2 Power connector	2 SATA power 1 connector	4pin power to HDD&Slim ODD, 300 mm/210 mm/120 mm

Cable routing for bay 2 drive when SATA 2 connector is not occupied

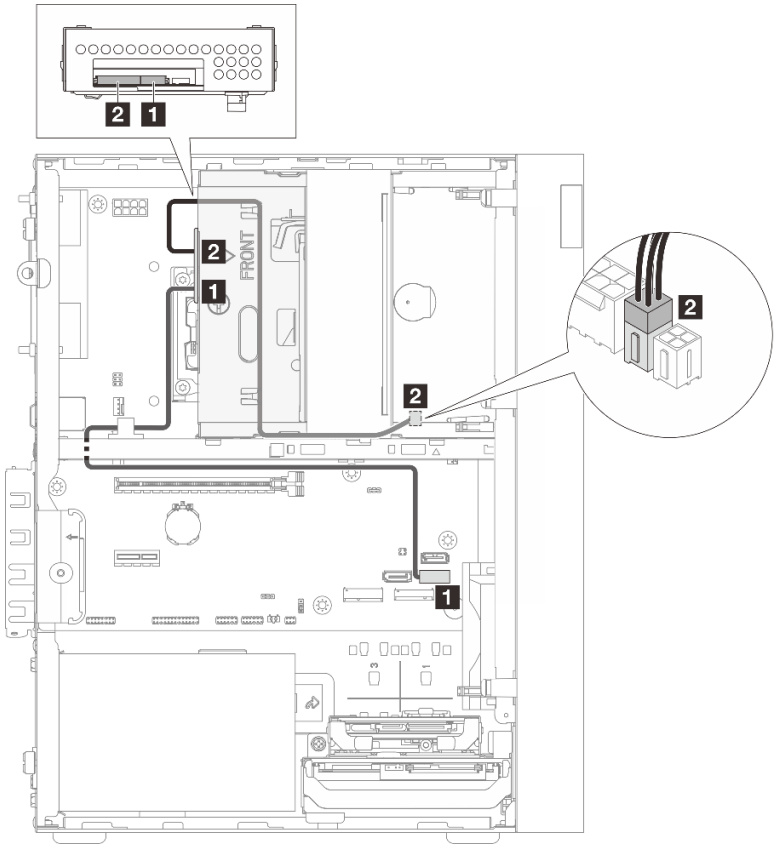

From (bay 2 drive)	To (system board)	Cable
1 Signal connector	1 SATA 2 connector	7pin SATA to 7pin Slim ODD SATA, 520 mm
2 Power connector	2 SATA power 1 connector	4pin power to HDD&Slim ODD, 300 mm/210 mm/120 mm

Cable routing for bay 3 drive

Follow the instructions in this section to learn how to do cable routing for the drive in bay 3.

For the system-board connector locations, see “System-board connectors” in *User Guide*.

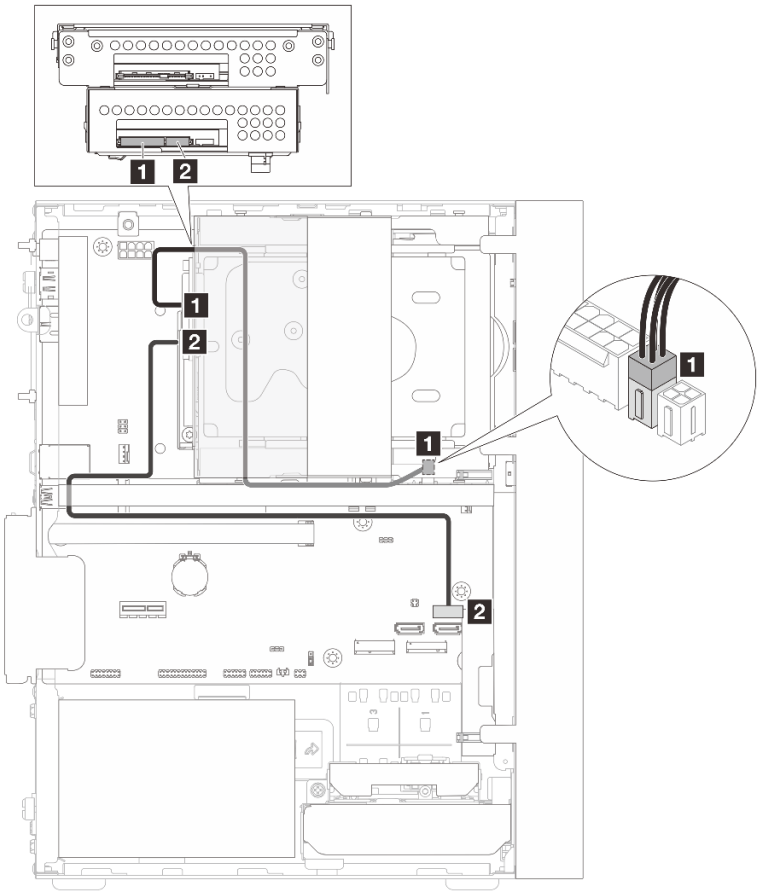

Figure 116. Cable routing for bay 3 drive

From (bay 3 drive)	To (system board)	Cable
1 Signal connector	1 SATA 3 connector	7pin SATA to 7pin RA SATA cable, 185 mm
2 Power connector	2 SATA power 1 connector	4pin power cable, 300 mm/80 mm

Cable routing for optical disk drive

Follow the instructions in this section to learn how to do cable routing for the optical disk drive (ODD).

- “Cable routing for ODD when SATA 2 connector is occupied by bay 2 drive” on page 136
- “Cable routing for ODD when SATA 2 connector is not occupied” on page 137

For the system-board connector locations, see “System-board connectors” in *User Guide*.

Cable routing for ODD when SATA 2 connector is occupied by bay 2 drive

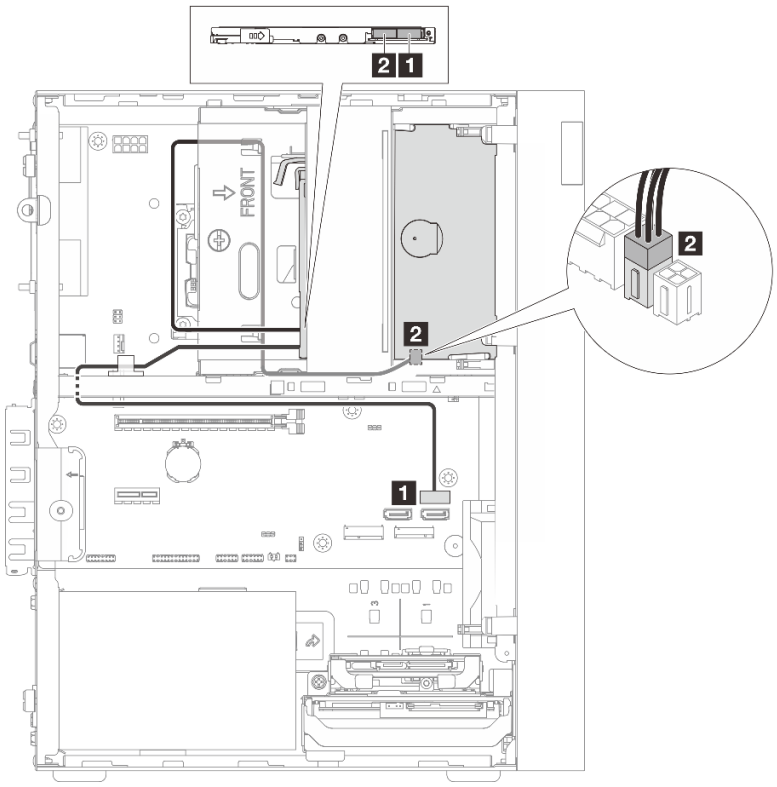

Figure 117. Cable routing for ODD

Table 4. Cable routing for ODD

From (ODD)	To (system board)	Cable
1 Signal connector	1 SATA 3 connector	7pin SATA to 7pin Slim ODD SATA, 520 mm
2 Power connector	2 SATA power 1 connector	4pin power to HDD&Slim ODD, 300 mm/210 mm/120 mm

Cable routing for ODD when SATA 2 connector is not occupied

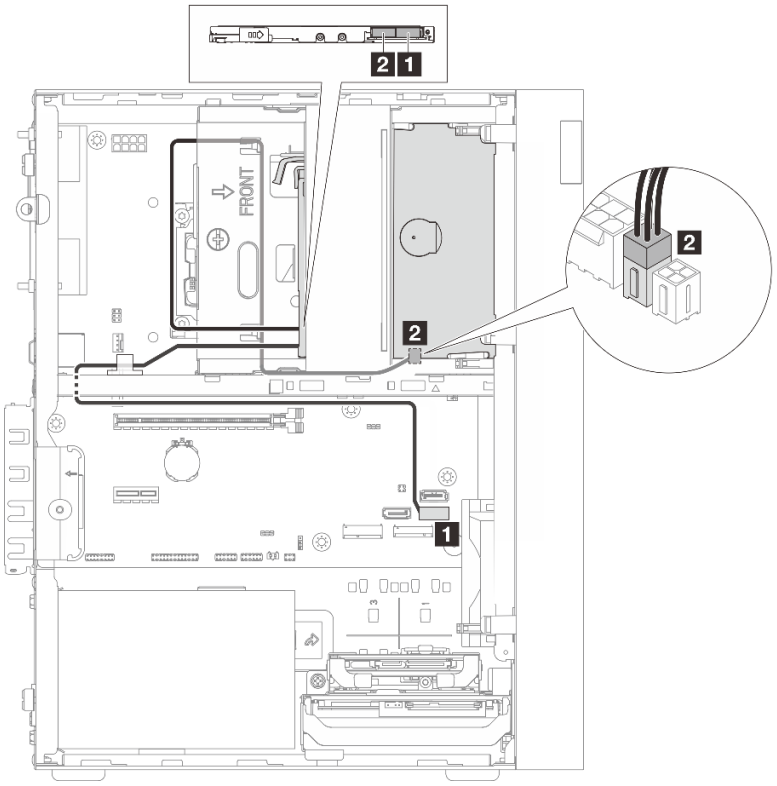

Figure 118. Cable routing for ODD

Table 5. Cable routing for ODD

From (ODD)	To (system board)	Cable
1 Signal connector	1 SATA 2 connector	7pin SATA to 7pin Slim ODD SATA, 520 mm
2 Power connector	2 SATA power 1 connector	4pin power to HDD&Slim ODD, 300 mm/210 mm/120 mm

Cable routing for the RAID adapter and drives

Follow the instructions in this section to learn how to do cable routing for the RAID adapter and drives.

- “Cable routing for two drives with the RAID adapter” on page 139
- “Cable routing for three drives with the RAID adapter” on page 140

For the system-board connector locations, see “System-board connectors” in *User Guide*.

RAID adapter cable

Note: 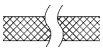 The break lines indicate that part of the cable is hidden in the illustration.

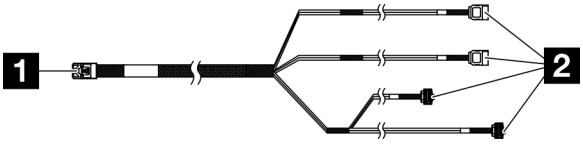

Figure 119. Cable for 5350-8i or 4350-8i

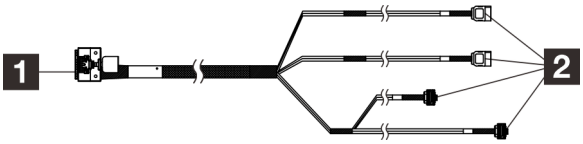

Figure 120. Cable for 545-8i

1 Connector for the RAID adapter (connector C0)	2 Connectors for the drives

Cable routing for two drives with the RAID adapter

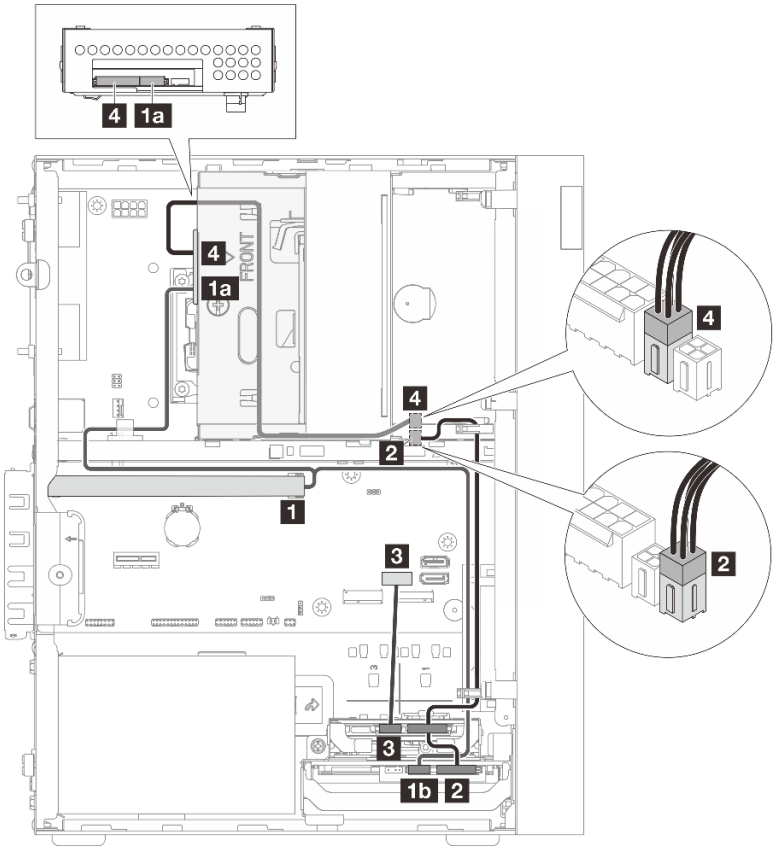

From	To	Cable
1 C0 connector on the RAID adapter	1a Bay 2 drive signal connector 1b Bay 0 drive signal connector	• For 5350-8i or 4350-8i: Mini SAS HD X4 Vertical to VT SATA7P x2 + RA SATA 7P x2, 460 mm/420 mm/440 mm/440 mm • For 545-8i: SlimSASX8 to SATA7P ST*2 + SATA7P RA*2, 460 mm/420 mm/440 mm/440 mm
2 Bay 0 and bay 1 drive power connectors	2 SATA power 2 connector	4pin power cable, 300 mm/80 mm
3 Bay 1 drive signal connector	3 SATA 1 connector	7pin SATA to 7pin RA SATA cable, 185 mm
4 Bay 2 drive power connector	4 SATA power 1 connector	4pin power to HDD&Slim ODD, 300 mm/210 mm/120 mm

Cable routing for three drives with the RAID adapter

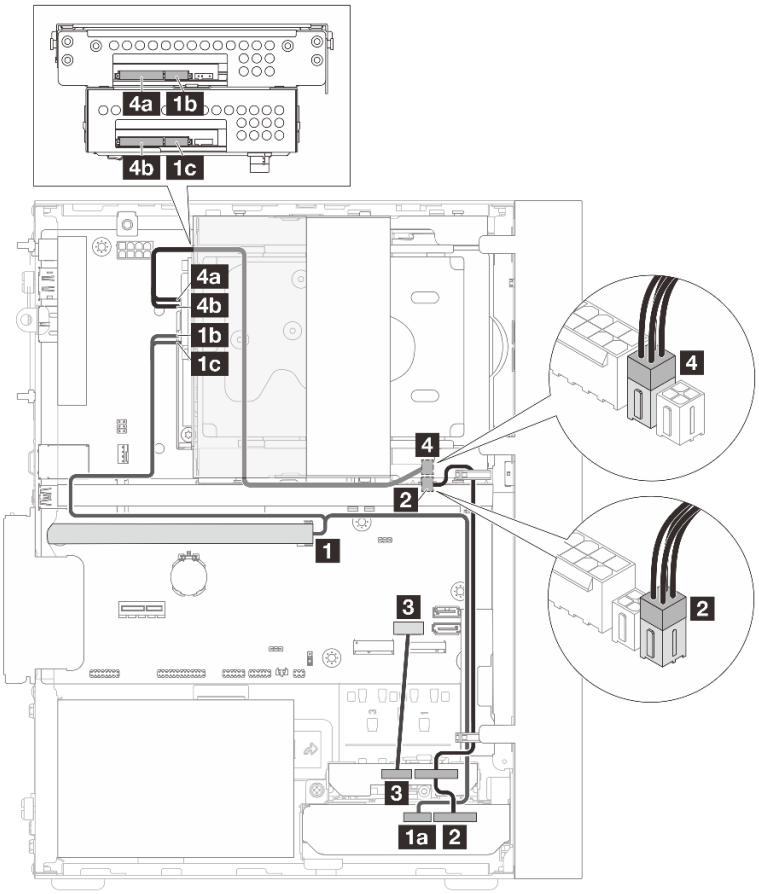

From	To	Cable
1 C0 connector on the RAID adapter	1a Bay 0 drive signal connector 1b Bay 3 drive signal connector 1c Bay 2 drive signal connector	• For 5350-8i: Mini SAS HD X4 Vertical to VT SATA7P x2 + RA SATA 7P x2, 460 mm/420 mm/440 mm/440 mm • For 545-8i: SlimSASX8 to SATA7P ST*2 + SATA7P RA*2, 460 mm/ 420 mm/440 mm/440 mm
2 Bay 0 and bay 1 drive power connectors	2 SATA power 2 connector	4pin power cable, 300 mm/80 mm
3 Bay 1 drive signal connector	3 SATA 1 connector	7pin SATA to 7pin RA SATA cable, 185 mm
4a Bay 3 drive power connector 4b Bay 2 drive power connector	4 SATA power 1 connector	4pin power to HDD&Slim ODD, 300 mm/210 mm/120 mm

Cable routing for the power supply unit

Follow the instructions in this section to learn how to do cable routing for the power supply unit (PSU).

For the system-board connector locations, see “System-board connectors” in *User Guide*.

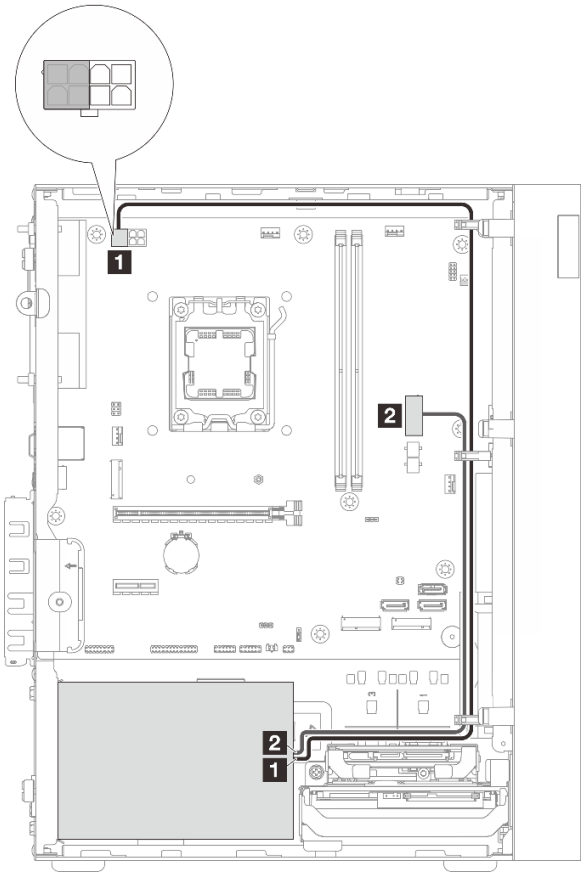

Figure 121. Cable routing for PSU

Table 6. Cable routing for PSU

From (PSU)	To (system board)
1 Micro-fit to 1X15P and 1X4P Y-splitter power cable (4-pin or 8-pin SATA connector for processor power) **Note:** An ATX 300 W PSU uses the 4-pin connector, while an ATX 500 W PSU uses the 8-pin connector. The figure above shows the 4-pin connector, which is used as an example.	1 Processor power connector
2 Micro-fit to 1X15P and 1X4P Y-splitter power cable (15-pin connector for system power)	2 System power connector

Cable routing for the front fan and rear fan

Follow the instructions in this section to learn how to do cable routing for the front fan and rear fan.

For the system-board connector locations, see “System-board connectors” in *User Guide*.

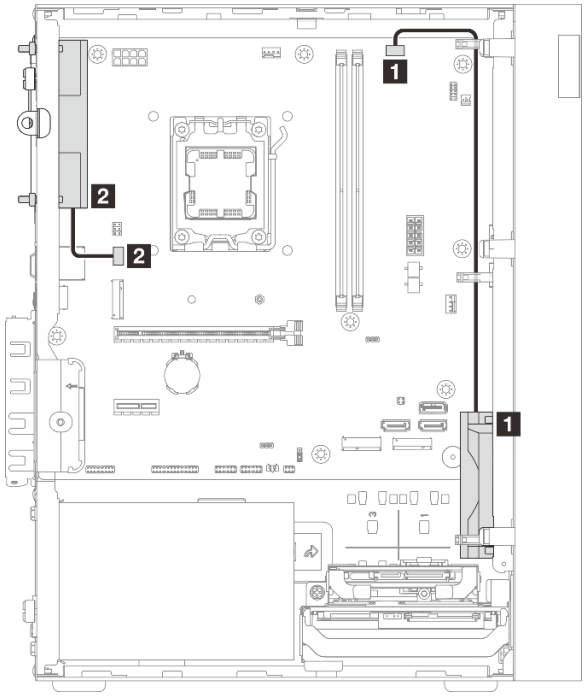

Figure 122. Cable routing for the front fan and rear fan

Table 7. Cable routing for the front fan and rear fan

From (fan)	To (system board)
1 Front fan cable	1 Front fan connector
2 Rear fan cable	2 Rear fan connector

Cable routing for the heat sink and fan module

Follow the instructions in this section to learn how to do cable routing for the heat sink and fan module.

For the system-board connector locations, see “System-board connectors” in *User Guide*.

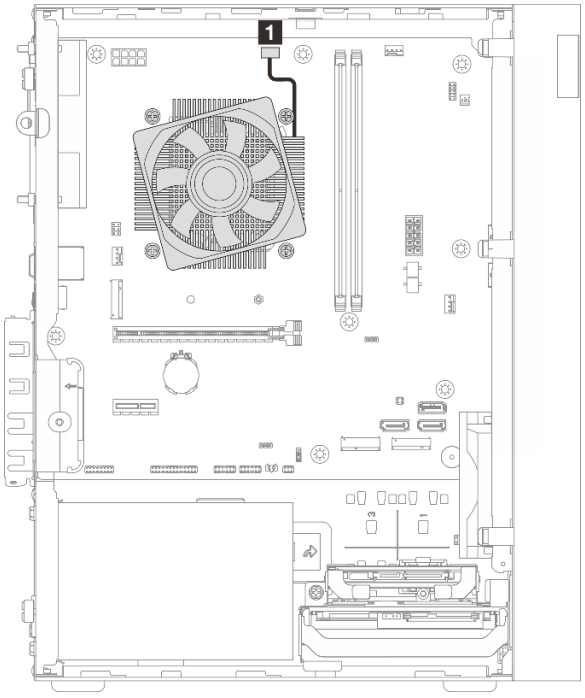

Figure 123. Cable routing for the heat sink and fan module

Table 8. Cable routing for the heat sink and fan module

From	To
1 Heat sink and fan module cable	Processor fan connector on the system board

Cable routing for the thermal sensor

Follow the instructions in this section to learn how to do cable routing for the thermal sensor.

For the system-board connector locations, see “System-board connectors” in *User Guide*.

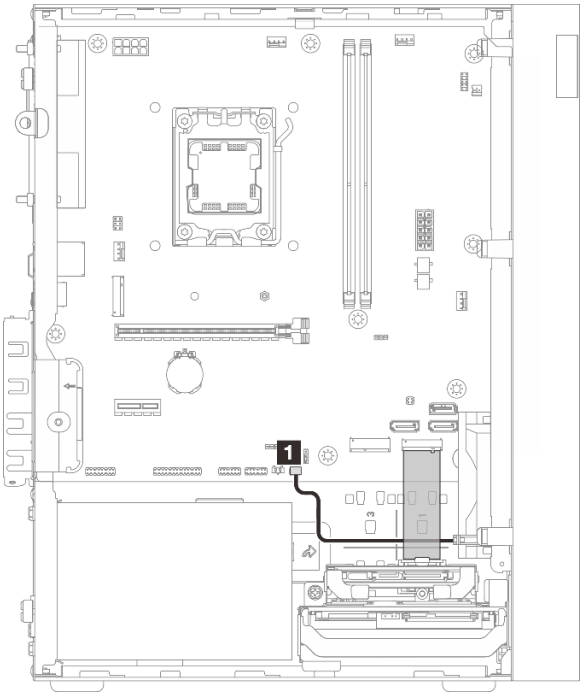

Figure 124. Cable routing for the thermal sensor

Table 9. Cable routing for the thermal sensor

From	To
1 Thermal sensor cable	Thermal sensor connector on the system board

Note: If applicable, place the thermal sensor cable under the M.2 drive.

Cable routing for the mono amplifier

If the chassis supports the mono amplifier, follow the instructions in this section to learn how to do cable routing for the mono amplifier.

For the system-board connector locations, see “System-board connectors” in *User Guide*.

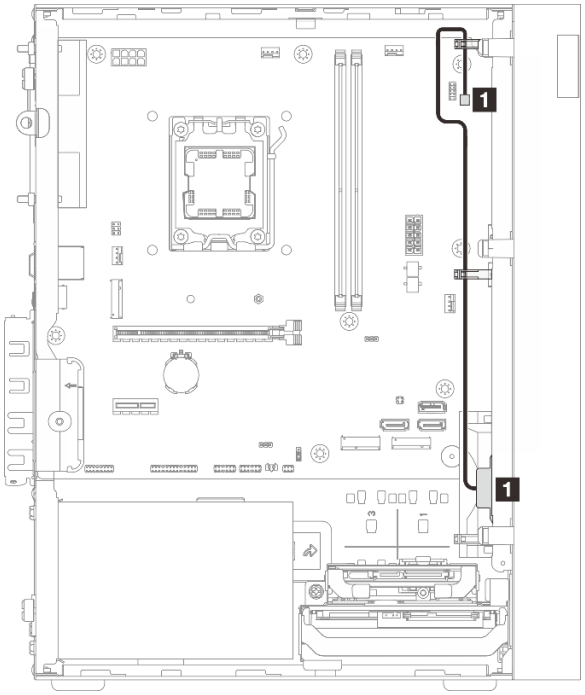

Figure 125. Cable routing for the mono amplifier

Table 10. Cable routing for the mono amplifier

From	To
1 Mono amplifier cable	1 Mono amplifier connector on the system board

Cable routing for the power button with LED

Follow the instructions in this section to learn how to do cable routing for the power button with LED.

For the system-board connector locations, see “System-board connectors” in *User Guide*.

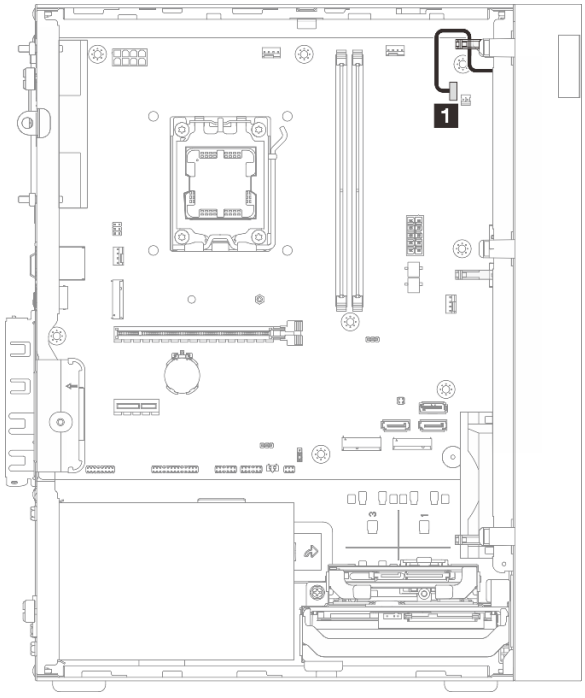

Figure 126. Cable routing for the power button with LED

Table 11. Cable routing for the power button with LED

From	To
1 Power button cable	Connector for power button with LED on the system board

Chapter 3. Problem determination

Use the information in this chapter to isolate and resolve issues that you might encounter while using your server.

Event logs

Logs of system events are available in Setup Utility.

Setup Utility provides the list of system event logs that are available in the **Event Logs** tab. Start the server and press **F1** to access Setup Utility, and go to **Event Logs → View Smbios Event Log** to access the list of events.

Following is the list of events that might appear in the system event log.

Table 12. List of events in Setup Utility

Error code	Event	Description
03008000	Memory size changed	This event is reported when the system detects that the current memory capacity is different from the memory capacity at the previous startup. • This event is for information only if the user has changed memory capacity support. • In other cases, follow "Memory problems" on page 152 for troubleshooting.
03008001	Password retry count	This event is for information only.
03008002	CPU Fan fail	Complete the following steps for troubleshooting: 1. Make sure the fan cable is connected to the correct connector, and the connector is plugged in firmly. 2. If the problem persists, replace the fan. See "Fan replacement" on page 62.
03008003	Rear Fan fail	
03008004	Front Fan fail	
0005100B	Unqualified DIMM 1	Change the unqualified DIMM to a Lenovo qualified one.
0005100C	Unqualified DIMM 2	

Troubleshooting by LEDs

See the following sections for information on available LEDs.

System-board LED

The following illustration shows the LED on the system board.

© Copyright Lenovo 2024, 2025

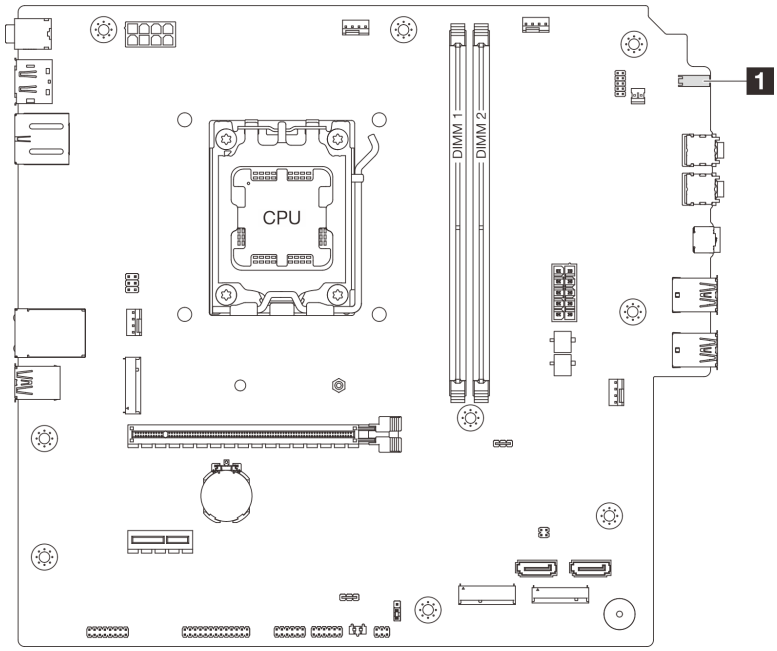

Figure 127. System-board LED

Table 13. System-board-LED

LED	Description
1 Drive activity LED (white)	This LED indicates the activity of the drives. • Blinking: The drives are active. • Off: The drives are not active.

Ethernet port (10/100/1000 Mbps RJ-45) LEDs

This topic provides information on LEDs of Ethernet port (10/100/1000 Mbps RJ-45).

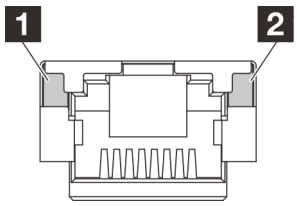

Figure 128. Ethernet port (10/100/1000 Mbps RJ-45) LEDs

LED	Description
1 Link LED	Use this LED to distinguish the network connectivity status: • Off: The network link is disconnected, or the network link is established at the speed of 10 Mbps. • Green: The network link is established at the speed of 100 Mbps. • Orange: The network link is established at the speed of 1000 Mbps.
2 Activity LED	Use this LED to distinguish the network activity status: • Off: No data is being transmitted. • Blinking: Data is being transmitted.

General problem determination procedures

Use the information in this section to resolve problems if the event log does not contain specific errors or the server is inoperative.

If you are not sure about the cause of a problem and the power supply is working correctly, complete the following steps to try to resolve the problem:

1. Check in Setup Utility and make sure all the installed components are enabled.
2. Make sure the firmware of the installed components is the latest version.
3. Turn off the server.
4. Ensure that the server is cabled correctly.
5. Remove or disconnect the following devices if applicable, one at a time, until you find the failure. Turn on and configure the server each time you remove or disconnect a device.
   - Any external devices
   - Surge-suppressor device (on the server)
   - Printer, mouse, and non-Lenovo devices
   - Each adapter
   - Storage drives
   - One memory module at a time until you reach the minimum configuration that is supported for the server

   Notes: The minimum configuration required for the server is as the following:

   - One processor and one processor cooling heat sink
   - One 16 GB ECC UDIMM in DIMM slot 1
   - One power supply
   - One power cord
   - One 3.5-inch SATA drive in drive bay 0
   - One system front fan (if debugging is out of chassis)
6. Turn on the server.

If the problem is solved after an adapter is removed from the server, but recurs after it is reinstalled, suspect the adapter. If the problem recurs when the adapter is replaced with a different one, try the original adapter in a different PCIe slot.

If the problem appears to be a networking one while the server passes all system diagnostics, suspect a network cabling problem that is external to the server.

Resolving suspected power problems

Power problems can be difficult to solve. For example, a short circuit can exist anywhere on any of the power distribution buses. Usually, a short circuit will cause the power subsystem to shut down because of an overcurrent condition.

Complete the following steps to diagnose and resolve a suspected power problem.

Step 1. Check for short circuits, for example, if a loose screw causes short circuit on a circuit board.

Step 2. Remove the adapters and disconnect the cables and power cords to all internal and external devices until the server is at the minimum configuration that is required for the server to start. The minimum configuration required for the server is as the following:

- One processor and one processor cooling heat sink

- One 16 GB ECC UDIMM in DIMM slot 1
- One power supply
- One power cord
- One 3.5-inch SATA drive in drive bay 0
- One system front fan (if debugging is out of chassis)

Step 3. Reconnect all AC power cords and turn on the server. If the server starts successfully, reseat the adapters and devices one at a time until the problem is isolated.

If the server does not start from the minimum configuration, replace the components in the minimum configuration one at a time until the problem is isolated.

Resolving suspected Ethernet controller problems

The method that you use to test the Ethernet controller depends on which operating system you are using. See the operating-system documentation for information about Ethernet controllers, and see the Ethernet controller device-driver readme file.

Complete the following steps to try to resolve suspected problems with the Ethernet controller.

Step 1. Make sure that the correct device drivers, which come with the server, are installed, and that they are at the latest level.

Step 2. Make sure that the Ethernet cable is installed correctly.

- The cable must be securely attached at all connections. If the cable is attached but the problem remains, try a different cable.
- If you set the Ethernet controller to operate at 100 Mbps or 1000 Mbps, you must use Category 5 cabling.

Step 3. Determine whether the hub supports auto-negotiation. If it does not, try configuring the integrated Ethernet controller manually to match the speed and duplex mode of the hub.

Step 4. Check the Ethernet port LEDs on the rear panel of the server. These LEDs indicate whether there is a problem with the connector, cable, or hub.

- The link LED is lit when the Ethernet controller receives a link pulse from the hub. If the LED is off, there might be a defective connector or cable or a problem with the hub.
- The activity LED is lit when the Ethernet controller sends or receives data over the Ethernet network. If the activity LED is off, make sure that the hub and network are operating and that the correct device drivers are installed.

Step 5. Check for operating-system-specific causes of the problem, and also make sure that the operating system drivers are installed correctly.

Step 6. Make sure that the device drivers on the client and server are using the same protocol.

If the Ethernet controller still cannot connect to the network but the hardware appears to be working, the network administrator must investigate other possible causes of the error.

Troubleshooting by symptom

Use this information to find solutions to problems that have identifiable symptoms.

To use the symptom-based troubleshooting information in this section, complete the following steps:

1. Review this section to find the symptoms that you are experiencing, and follow the suggested actions to resolve the issue.
2. If the problem persists, contact support (see “Contacting Support” on page 166).

Audio problems

The audio function is only supported on Windows Client OSs. Follow this procedure to disable the audio function on Server OSs.

1. Turn on the server.
2. Before the operating system starts up, press **F1** to enter the Setup Utility.
3. Select **Devices → Audio Setup → Onboard Audio Controller → Disabled**.

Intermittent problems

Follow this procedure to solve intermittent problems.

- "Intermittent external device problems" on page 151
- "Intermittent unexpected reboots" on page 151

Intermittent external device problems

Complete the following steps until the problem is solved.

1. Update the UEFI firmware to the latest versions.
2. Check the system event log and resolve any related problems. To view the system event log, go to **Setup Utility** and select **Event Logs → View Smbios Event Log**.
3. Make sure that:
   - The latest version of corresponding driver is installed.
   - The device is seated correctly without physical damage on the device or connector.
   - Device firmware has been updated to the latest version.
   - You followed the installation instructions that came with the device, and the device is installed properly.
   - You have not loosened any other installed devices or cables.
4. For a USB device:
   a. Make sure that the device is properly configured and enabled in Setup Utility.
   b. Connect the device to another USB port.
   c. If the device is connected to a USB hub, remove the device from the hub, and connect it directly to the server.

Intermittent unexpected reboots

Complete the following steps until the problem is solved.

1. Check the system event log and resolve any related problems. To view the system event log, go to **Setup Utility** and select **Event Logs → View Smbios Event Log**.
2. If the reboot occurs after the operating system starts, disable any automatic server restart (ASR) utilities or any ASR devices that are installed.
3. Look into the event logs for an event code that indicates a reboot. See "Event logs" on page 147 for information about viewing the event log.

Keyboard, mouse, KVM switch or USB-device problems

Use this information to solve problems related to a keyboard, mouse, KVM switch or USB device.

- "All or some keys on the keyboard do not work" on page 152
- "Mouse does not work" on page 152

- “KVM switch problems” on page 152
- “USB device does not work” on page 152

All or some keys on the keyboard do not work

1. Make sure that:
   - The keyboard cable is securely connected.
   - The server and the monitor are turned on.
2. If you are using a USB keyboard and it is connected to a USB hub, disconnect the keyboard from the hub and connect it directly to the server.
3. Replace the keyboard.

Mouse does not work

1. Make sure that:
   - The mouse cable is securely connected to the server.
   - The mouse device drivers are installed correctly.
   - The server and the monitor are turned on.
2. If you are using a USB mouse and it is connected to a USB hub, disconnect the mouse from the hub and connect it directly to the server.
3. Replace the mouse.

KVM switch problems

1. Make sure that the KVM switch is supported by your server.
2. Make sure that the KVM switch is powered on correctly.
3. If the keyboard, mouse or monitor can be operated normally with direct connection to the server, then replace the KVM switch.

USB device does not work

1. Make sure that:
   - The correct USB device driver is installed.
   - The operating system supports USB devices.
2. Make sure that the USB setup options are set correctly in system setup.

   Restart the server and press the key according to the on-screen instructions to go to Setup Utility. Then, click **Devices → USB Setup**.
3. If you are using a USB hub, disconnect the USB device from the hub and connect it directly to the server.
4. Replace the USB device.

Memory problems

Follow this procedure to resolve issues related to memory.

- “Displayed system memory less than installed physical memory” on page 152

Displayed system memory less than installed physical memory

Note: Each time you install or remove a DIMM, you must disconnect the server from the power source; then, wait 10 seconds before restarting the server.

Complete the following steps until the problem is solved.

1. Check the system event log and resolve any related problems. To view the system event log, go to **Setup Utility** and select **Event Logs → View Smbios Event Log**.
2. Make sure that:
   - The DIMMs are supported by the server (see https://serverproven.lenovo.com).
   - The DIMMs are properly installed. Examine if there is any gap between the connector and the DIMM. Remove and install the DIMM if there is any.
3. If the server comes with Lenovo XClarity Provisioning Manager Lite, go to **Diagnostics → Memory test** to perform diagnostics on the DIMMs. Replace the DIMM that is displayed as faulty. Otherwise, skip to the next step.
4. Remove the DIMMs until the system reaches minimal memory requirement; then, add one DIMM and reboot the server, and repeat the step if the problem does not recur. If the problem occurs after addition of a DIMM, replace it.

   See “Technical Specifications” in *User Guide* or *System Configuration Guide* for the minimal configuration for debugging.

Microsoft Server 2022 activation problem

Use this information to activate Windows Server 2022.

1. Power on the system to enter Windows Server 2022. Then, right-click on the **Start** button and select **Settings** from the menu.
2. Select **Update & Security → Activation → Change product key**.

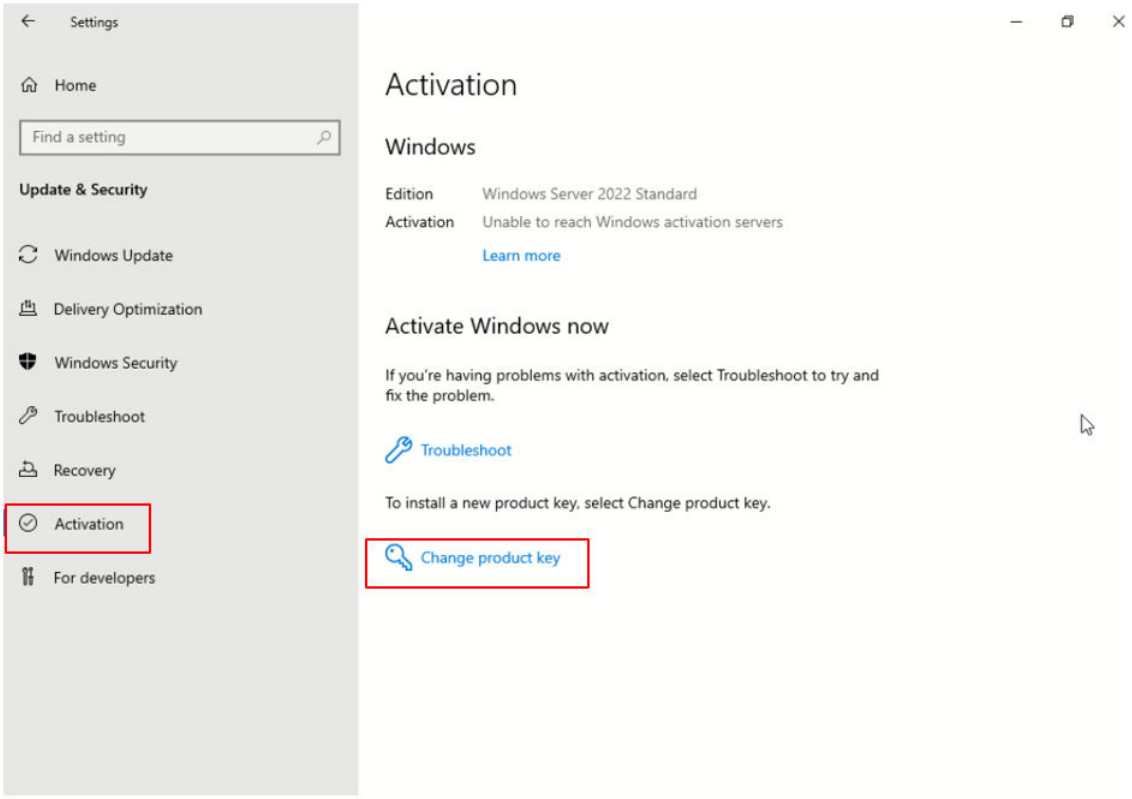

3. Enter the product key and click **Next**.

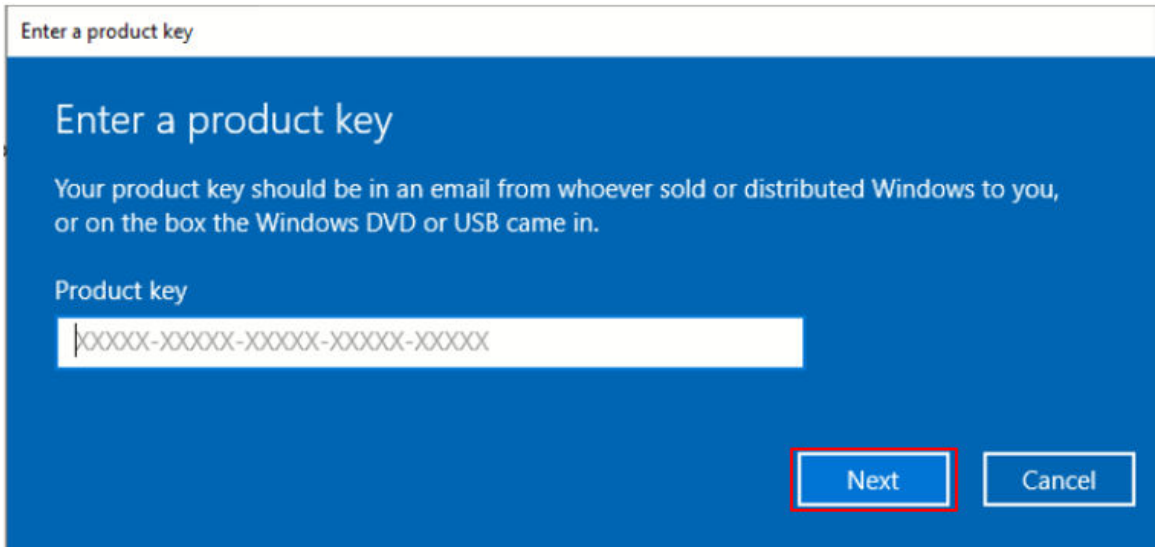

Note: The product key is available on the Certificate of Authenticity (COA) label 1.

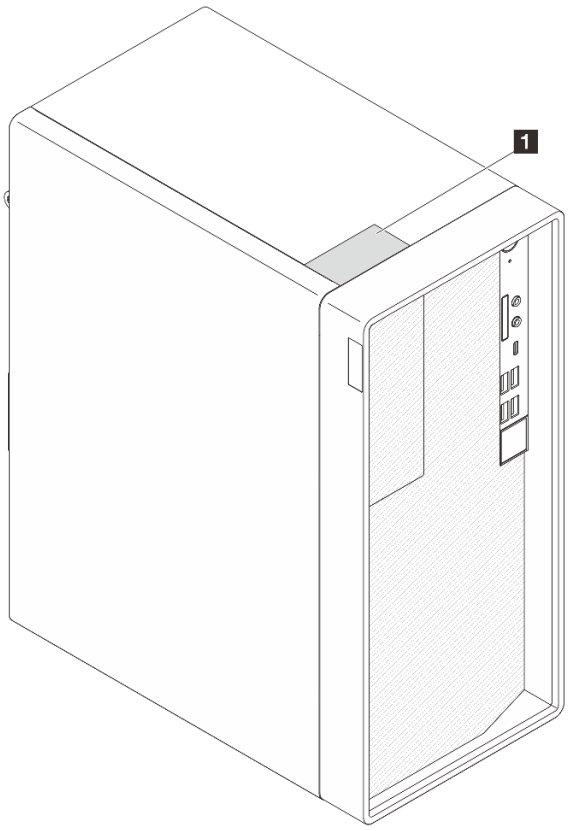

Microsoft Server 2025 activation problem

Use this information to activate Windows Server 2025.

1. Power on the system to enter Windows Server 2025. Then, right-click on the **Start** button and select **Settings** from the menu.
2. Select **System → Activation**, and click the **Change** button next to **Change product key**.

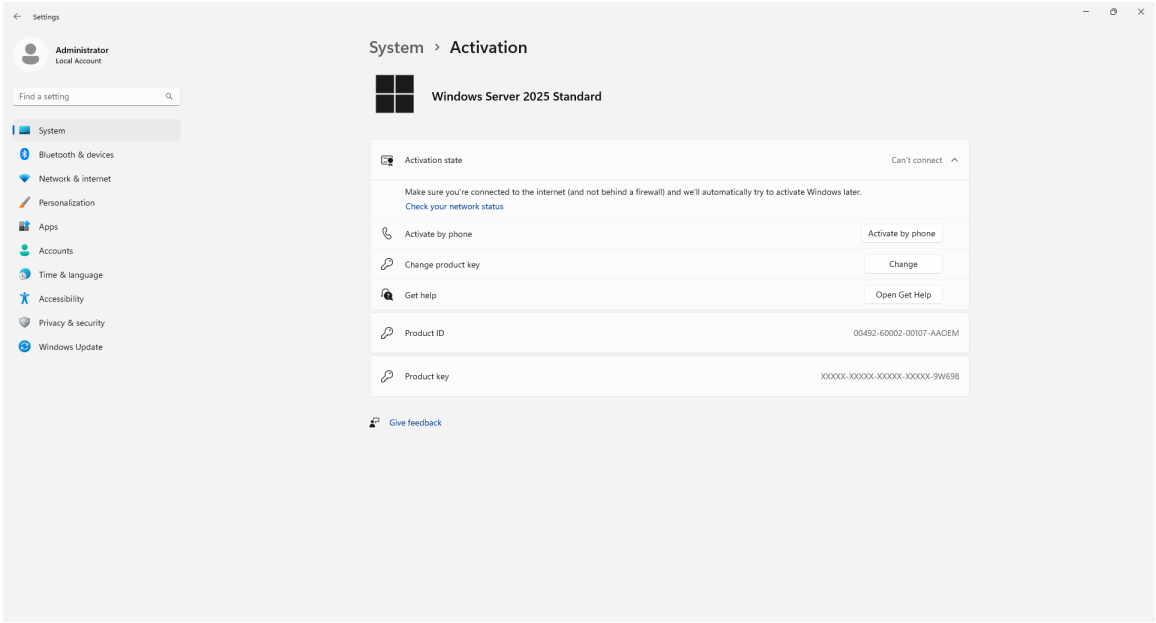

3. Enter the product key and click **Next**.

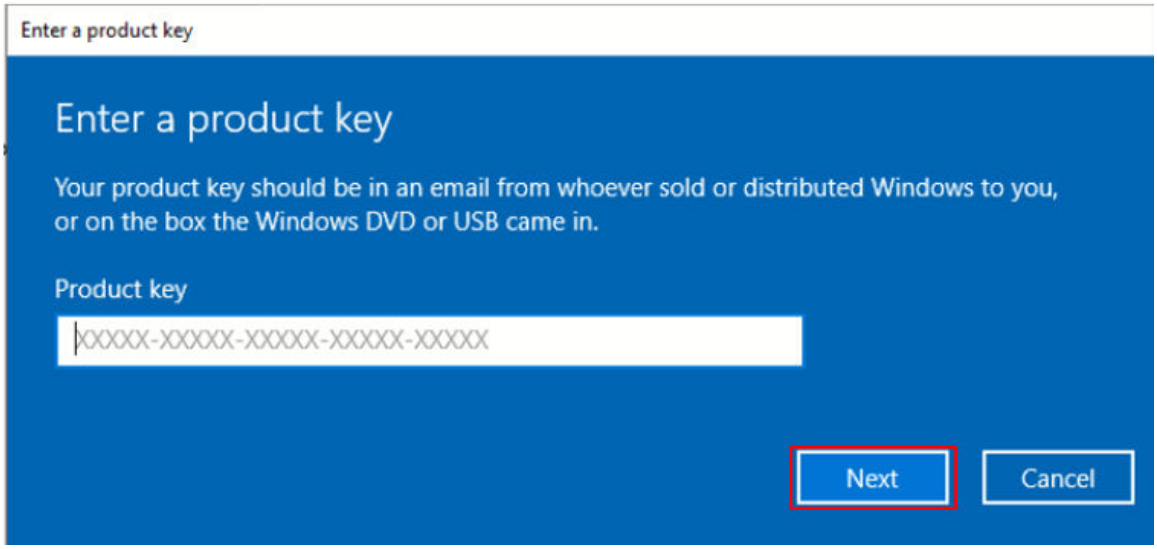

Note: The product key is available on the Certificate of Authenticity (COA) label 1.

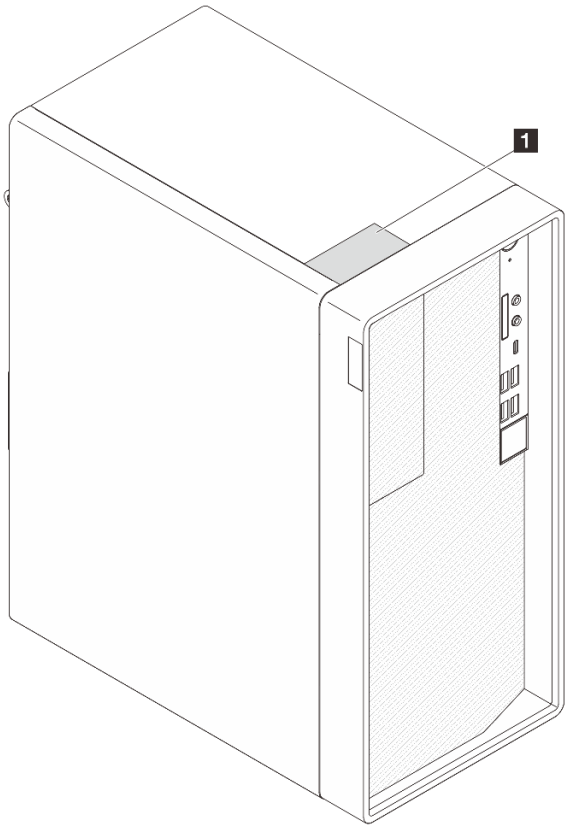

Monitor and video problems

Use this information to solve problems related to a monitor or video.

- “Incorrect characters are displayed” on page 156
- “Screen is blank” on page 156
- “Screen goes blank when you start some application programs” on page 157
- “The monitor has screen jitter, or the screen image is wavy, unreadable, rolling, or distorted” on page 157
- “The wrong characters appear on the screen” on page 157

Incorrect characters are displayed

Complete the following steps until the problem is solved.

1. Verify that the language and locality settings are correct for the keyboard and operating system.
2. If the wrong language is displayed, update the server firmware to the latest level. See “Update the firmware” in *User Guide* or *System Configuration Guide*.

Screen is blank

Complete the following steps until the problem is solved.

1. If you have installed new DIMMs recently, make sure the capacity of the new DIMMs is the same as the previously installed ones. If not, remove the newly installed DIMMs, and power on the server again.
2. If there are other monitors that are connected to the server, remove them.
3. If the server is attached to a KVM switch, bypass the KVM switch to eliminate it as a possible cause of the problem: connect the monitor cable directly to the correct connector on the rear of the server.

4. Make sure that:
   - The server is turned on and there is power supplied to the server.
   - The monitor cables are securely connected.
   - The monitor is turned on with brightness and contrast controls adjusted correctly.
5. Disconnect the cable and select another video connector for connection.
6. Replace the following components one at a time, in the order shown, restarting the server each time:
   a. Monitor cable
   b. Monitor
   c. (Trained technician only) System board
7. If the problem remains, contact Lenovo Support.

Screen goes blank when you start some application programs

1. Make sure that:
   - The application program is not setting a display mode with resolution that is higher than the capability of the monitor.
   - The necessary device drivers for the application are all installed.

The monitor has screen jitter, or the screen image is wavy, unreadable, rolling, or distorted

Complete the following steps until the problem is solved.

1. If the monitor self-tests show that the monitor is working correctly, examine the location of the monitor. Magnetic fields around other devices (such as transformers, appliances, fluorescents, and other monitors) can cause screen jitter or wavy, unreadable, rolling, or distorted screen images. If this happens, turn off the monitor.

   Attention: Moving a color monitor while it is turned on might cause screen discoloration.

   Move the device and the monitor at least 305 mm (12 inches) apart, and turn on the monitor.

   Notes:

   a. To prevent diskette drive read/write errors, make sure that the distance between the monitor and any external diskette drive is at least 76 mm (3 inches).
   b. Non-Lenovo monitor cables might cause unpredictable problems.
2. Reseat the monitor cable.
3. Replace the following components one at a time, in the order shown, restarting the server each time:
   a. Monitor cable
   b. Monitor
   c. Video adapter (if one is installed)
   d. (Trained technician only) System board

The wrong characters appear on the screen

Complete the following steps until the problem is solved.

1. Verify that the language and locality settings are correct for the keyboard and operating system.
2. If the wrong language is displayed, update the server firmware to the latest level. See “Update the firmware” in *User Guide* or *System Configuration Guide*.

Network problems

Use this information to resolve issues related to networking.

- “Cannot wake server using Wake on LAN” on page 158
- “Could not log in using LDAP account with SSL enabled” on page 158

Cannot wake server using Wake on LAN

Complete the following steps until the problem is resolved:

1. Go to **Setup Utility** and select **Power → Automatic Power On → Wake on LAN**. Make sure **Wake on LAN** is set to **Enabled**.
2. Remove and reinstall the network adapter.
3. Turn off the server and disconnect it from the power source; then, wait 10 seconds before restarting the server.
4. If the problem recurs, replace the network adapter.

Could not log in using LDAP account with SSL enabled

Complete the following steps until the problem is resolved:

1. Make sure that the license key is valid.
2. Generate a new license key and log in again.

Observable problems

Follow this procedure to solve observable problems.

- “Server is unresponsive (POST is complete and operating system is running)” on page 158
- “Server is unresponsive (cannot press F1 to start Setup Utility)” on page 159
- “Unusual smell” on page 159
- “Server seems to be running hot” on page 159
- “Cracked parts or cracked chassis” on page 159

Server is unresponsive (POST is complete and operating system is running)

Complete the following steps until the problem is solved.

- If you have direct access to the server, complete the following steps:
  1. If possible, log in to the system and verify that all applications are running without hanging.
  2. Restart the server.
  3. If the problem recurs, make sure that every newly installed software is configured correctly.
  4. Contact the vendor or provider of the software for technical support.
- If you have remote access to the server, complete the following steps:
  1. If possible, log in to the system and verify that all applications are running without hanging.
  2. Log out of the system and log back in.
  3. Validate the network access by pinging or running traceroute to the server with a command line.
     a. If you are unable to get a response during a ping test, try to ping another server in the same server room to determine whether the problem is caused by failed connection of the server.
     b. Run traceroute to determine where the connection breaks down, and try to resolve the connection issue with VPN or avoiding where the connection breaks down.

4. Restart the server remotely.
5. If the problem recurs, make sure that every installed software is configured correctly.
6. Contact the vendor or provider of the software for technical support.

Server is unresponsive (cannot press F1 to start Setup Utility)

Complete the following steps until the problem is solved.

Note: Any configuration changes, such as system firmware update, device and corresponding driver installation, could cause failed POST.

If this occurs, the server responds in either of the following ways:

- The system restarts automatically and produces POST again.
- The server hangs, and you must manually reboot the system so that the system produces POST again.

Unusual smell

Complete the following steps until the problem is solved.

1. Any unusual smell might come from newly installed devices. Examine the devices to identify the source of the smell, and remove the one that produces it.
2. If the problem recurs, contact Lenovo Support.

Server seems to be running hot

Complete the following steps until the problem is solved.

1. Make sure that the room temperature is within the specified range (see “Environmental specifications” in *User Guide* or *System Configuration Guide*).
2. Check the system event log and resolve any related problems. To view the system event log, go to **Setup Utility** and select **Event Logs → View Smbios Event Log**.
3. If there are no related events in the log, contact Lenovo Support.

Cracked parts or cracked chassis

Contact Lenovo Support.

Optional-device problems

Use this information to solve problems related to optional devices.

- “PCIe adapter is not recognized or is not functioning” on page 160
- “A Lenovo optional device that worked previously does not work now” on page 160
- “A Lenovo optional device that was just installed does not work” on page 160
- “A Lenovo optional device that worked previously does not work now” on page 160

External USB device is not recognized

Complete the following steps until the problem is solved.

1. Update the UEFI firmware to the latest version.
2. Make sure that the proper drivers are installed on the server. See the product documentation for the USB device for information about device drivers.
3. Use Setup Utility to make sure that the device is configured correctly.
4. If the USB device is plugged into a hub or the console breakout cable, unplug the device and plug it directly into the USB port on the front of the server.

PCIe adapter is not recognized or is not functioning

Complete the following steps until the problem is solved.

1. Make sure that:
   - The device is supported by the server (see https://serverproven.lenovo.com).
   - The latest version of corresponding driver is installed.
   - The device is seated correctly without physical damage on the device or connector.
   - System firmware has been updated to the latest version.
2. Remove the device and install it to another PCIe slot if possible.
3. Check http://datacentersupport.lenovo.com for any tech tips (also known as retain tips or service bulletins) that might be related to the adapter.

Insufficient PCIe resources are detected

Complete the following steps until the problem is solved.

1. Remove any devices that were installed recently, and restart the server. If none was recently installed, remove one of the PCIe adapters.
2. Go to **Setup Utility** and select **Devices → PCI Express Configuration**; then, modify the setting to a lower speed. For example, modify the speed of PCIe x16 slot from Auto or Gen4 to Gen3, Gen2, or Gen1.
3. Save the settings and restart the server.
4. Depending on whether or not the restart is successful:
   - If it is successful, shut down the server and reinstall the removed PCIe adapters one at a time, and restart the server again after each addition.
   - If it fails, remove another PCIe adapter and restart the server again.

A Lenovo optional device that was just installed does not work

Complete the following steps until the problem is solved.

1. Check the system event log and resolve any related problems. To view the system event log, go to **Setup Utility** and select **Event Logs → View Smbios Event Log**.
2. Make sure that:
   - The device is supported by the server (see https://serverproven.lenovo.com).
   - The latest version of corresponding driver is installed.
   - The device is seated correctly without physical damage on the device or connector.
   - System firmware has been updated to the latest version.
   - You followed the installation instructions that came with the device, and the device is installed properly.
   - You have not loosened any other installed devices or cables.
3. Reseat the device.
4. Replace the device.

A Lenovo optional device that worked previously does not work now

Complete the following steps until the problem is solved.

1. Check the system event log and resolve any related problems. To view the system event log, go to **Setup Utility** and select **Event Logs → View Smbios Event Log**.
2. Make sure that all of the cables are securely connected.
3. If the device comes with test instructions, use those instructions to test the device.
4. Reseat the failing device.
5. Replace the failing device.

Performance problems

Use this information to solve performance problems.

- "Network performance" on page 161
- "Operating system performance" on page 161

Network performance

Complete the following steps until the problem is solved:

1. Isolate which network is operating slowly (such as storage, data, and management). You might find it helpful to use ping tools or operating-system tools such as task manager or resource manager.
2. Check for traffic congestion on the network.
3. Update the NIC device driver, or the storage device controller device driver.
4. Use the traffic-diagnostic tools that are provided by the IO-module manufacturer.

Operating system performance

Complete the following steps until the problem is solved:

1. If you have recently made changes to the server (for example, updated device drivers or installed software applications), remove the changes.
2. Check for any networking issues.
3. Check the operating system logs for performance related errors.
4. Check for events related to high temperatures and power issues as the server might be throttled to help with cooling. If it is throttled, reduce the workload on the server to help improve performance.
5. Check for events related to disabled DIMMs. If you do not have enough memory for the application workload, your operating system will have poor performance.
6. Ensure that the workload is not too high for the configuration.

Power on and power off problems

Use this information to resolve issues when powering on or powering off the server.

- "Server does not power on" on page 161
- "Server powers off unexpectedly" on page 162
- "Server does not power off" on page 162

Server does not power on

Complete the following steps until the problem is solved.

Note: The power button will not function until approximately one to three minutes after the server is connected to ac power.

1. Remove any optional devices that were installed recently. System power problems caused by addition of a device indicates this device is either incompatible or too much for the power supply to support.
2. Make sure the power cord is securely connected to the server and to a working electrical outlet. Disconnect and reconnect or replace the server power cord.
3. Reseat the power supply. If the problem persists, replace the power supply.
4. Disconnect and reconnect the front panel cable (see "System-board connectors" in *User Guide* or *System Configuration Guide* for the location of the connector on the system board). If the problem persists, replace the front panel.

Server powers off unexpectedly

Complete the following steps until the problem is solved.

1. Make sure the room temperature does not cause overheating, and no object is blocking the airflow in front and back of the server.
2. Remove any optional devices that were installed recently. System power problems caused by addition of a device indicates this device is either incompatible or too much for the power supply to support.
3. Make sure the power cord is securely connected to the server and to a working electrical outlet. Disconnect and reconnect or replace the server power cord.
4. Reseat the power supply. If the problem persists, replace the power supply.

Server does not power off

Complete the following steps until the problem is solved.

1. Press **Ctrl+Alt+Delete**.
2. Turn off the server by pressing and holding the power button for five seconds.
3. Power on the server.
4. If the server fails POST and the power button does not work, disconnect the power cord for 20 seconds; then, reconnect the power cord and power on the server.
5. If the problem persists, contact Lenovo support.

Software problems

Use this information to solve software problems.

1. To determine whether the problem is caused by the software, make sure that:
   - The server has the minimum memory that is needed to use the software. For memory requirements, see the information that comes with the software.

     Note: If you have just installed an adapter or memory, the server might have a memory-address conflict.
   - The software is designed to operate on the server.
   - Other software works on the server.
   - The software works on another server.
2. If you receive any error messages while you use the software, see the information that comes with the software for a description of the messages and suggested solutions to the problem.
3. Contact your place of purchase of the software.

Storage drive problems

Use this information to resolve issues related to the storage drives.

- "Server cannot recognize a drive" on page 162
- "Multiple drives fail" on page 163
- "A replacement drive does not rebuild" on page 163
- "Suspected RAID volume failure" on page 163

Server cannot recognize a drive

Complete the following steps until the problem is solved.

1. Make sure that:

- The drive is supported by the server (see https://serverproven.lenovo.com).
- The drive is properly installed with signal and power cables properly connected.

2. Make sure the drive is enabled. Go to **Setup Utility** and select **Devices → ATA Drive Setup** to see if the drive in question is enabled. If not, enable it.
3. If the server comes with Lenovo XClarity Provisioning Manager Lite, go to **Diagnostics → HDD test** to perform diagnostics on the drives. Replace the drive that is displayed as faulty. Otherwise, skip to the next step.
4. Remove the drives until the system reaches minimal drive requirement; then, add one drive and restart the server, and repeat the step if the problem does not recur. If the problem occurs after addition of a drive, replace it.

   See “Technical Specifications” in *User Guide* or *System Configuration Guide* for the minimal configuration for debugging.

Multiple drives fail

Complete the following steps until the problem is solved:

1. If the server comes with Lenovo XClarity Provisioning Manager Lite, go to **Diagnostics → HDD test** to perform diagnostics on the drives. Replace the drive that is displayed as faulty. Otherwise, skip to the next step.
2. Remove the drives until the system reaches minimal drive requirement; then, add one drive and reboot the server, and repeat the step if the problem does not recur. If the problem occurs after addition of a drive, replace it.

   See “Technical Specifications” in *User Guide* or *System Configuration Guide* for the minimal configuration for debugging.

A replacement drive does not rebuild

Complete the following steps until the problem is solved:

1. If the server comes with Lenovo XClarity Provisioning Manager Lite, go to **Diagnostics → RAID Log**. Look for related errors and solve them. Otherwise, skip to the next step.
2. Review the document that came with the RAID adapter to make sure RAID is set properly.

Suspected RAID volume failure

Reboot the system, press **F1** to go to **Setup Utility**, and select **Advanced → x350-8i → Array Configuration → Manage Arrays → Array X → List Logical Drives → Logical Drive X (Logical Drive X) → Logical Drive Details** to check failure symptoms.

UEFI upgrade problem

In Linux operating systems, if the message "0x10 Error: Unable to load driver" is displayed during UEFI upgrade and **Secure Boot** is enabled, complete the following steps to upgrade UEFI.

1. Go to https://www.ami.com/bios-uefi-utilities/#aptiov.
2. Download “APTIO V AMI FIRMWARE UPDATE UTILITY” and unzip the file.
3. Refer to “Chapter 6 Signing Driver and Enrolling Public Key to the System” in *AMI_Aptio_5.x_AFU_User_Guide_NDA.pdf* for details.

   Note: The PDF file is included in “APTIO V AMI FIRMWARE UPDATE UTILITY”.

Appendix A. Getting help and technical assistance

If you need help, service, or technical assistance or just want more information about Lenovo products, you will find a wide variety of sources available from Lenovo to assist you.

On the World Wide Web, up-to-date information about Lenovo systems, optional devices, services, and support are available at:

http://datacentersupport.lenovo.com

Note: IBM is Lenovo's preferred service provider for ThinkSystem.

Before you call

Before you call, there are several steps that you can take to try and solve the problem yourself. If you decide that you do need to call for assistance, gather the information that will be needed by the service technician to more quickly resolve your problem.

Attempt to resolve the problem yourself

You can solve many problems without outside assistance by following the troubleshooting procedures that Lenovo provides in the online help or in the Lenovo product documentation. The online help also describes the diagnostic tests that you can perform. The documentation for most systems, operating systems, and programs contains troubleshooting procedures and explanations of error messages and error codes. If you suspect a software problem, see the documentation for the operating system or program.

You can find the product documentation for your ThinkSystem products at the following location:

https://pubs.lenovo.com/

You can take these steps to try to solve the problem yourself:

- Check all cables to make sure that they are connected.
- Check the power switches to make sure that the system and any optional devices are turned on.
- Check for updated software, firmware, and operating-system device drivers for your Lenovo product. (See the following links) The Lenovo Warranty terms and conditions state that you, the owner of the Lenovo product, are responsible for maintaining and updating all software and firmware for the product (unless it is covered by an additional maintenance contract). Your service technician will request that you upgrade your software and firmware if the problem has a documented solution within a software upgrade.
  - Drivers and software downloads
    - https://datacentersupport.lenovo.com/products/servers/thinksystem/st45v3/downloads/driver-list/
  - Operating system support center
    - https://datacentersupport.lenovo.com/solutions/server-os
  - Operating system installing instructions
    - https://pubs.lenovo.com/thinksystem#os-installation
- If you have installed new hardware or software in your environment, check https://serverproven.lenovo.com to make sure that the hardware and software are supported by your product.
- Refer to Chapter 3 “Problem determination” on page 147 for instructions on isolating and solving issues.
- Go to http://datacentersupport.lenovo.com and check for information to help you solve the problem.

© Copyright Lenovo 2024, 2025

To find the Tech Tips available for your server:

1. Go to http://datacentersupport.lenovo.com and navigate to the support page for your server.
2. Click on **How To's** from the navigation pane.
3. Click **Article Type → Solution** from the drop-down menu.

   Follow the on-screen instructions to choose the category for the problem that you are having.

- Check Lenovo Data Center Forum at https://forums.lenovo.com/t5/Datacenter-Systems/ct-p/sv_eg to see if someone else has encountered a similar problem.

Gathering information needed to call Support

If you require warranty service for your Lenovo product, the service technicians will be able to assist you more efficiently if you prepare the appropriate information before you call. You can also go to http://datacentersupport.lenovo.com/warrantylookup for more information about your product warranty.

Gather the following information to provide to the service technician. This data will help the service technician quickly provide a solution to your problem and ensure that you receive the level of service for which you might have contracted.

- Hardware and Software Maintenance agreement contract numbers, if applicable
- Machine type number (Lenovo 4-digit machine identifier). Machine type number can be found on the ID label, see "Identifying the server" in *User Guide* or *System Configuration Guide*.
- Model number
- Serial number
- Current system UEFI and firmware levels
- Other pertinent information such as error messages and logs

As an alternative to calling Lenovo Support, you can go to https://support.lenovo.com/servicerequest to submit an Electronic Service Request. Submitting an Electronic Service Request will start the process of determining a solution to your problem by making the pertinent information available to the service technicians. The Lenovo service technicians can start working on your solution as soon as you have completed and submitted an Electronic Service Request.

Contacting Support

You can contact Support to obtain help for your issue.

You can receive hardware service through a Lenovo Authorized Service Provider. To locate a service provider authorized by Lenovo to provide warranty service, go to https://datacentersupport.lenovo.com/serviceprovider and use filter searching for different countries. For Lenovo support telephone numbers, see https://datacentersupport.lenovo.com/supportphonelist for your region support details.

Appendix B. Documents and supports

This section provides handy documents, driver and firmware downloads, and support resources.

Documents download

This section provides introduction and download link for handy documents.

Documents

Download the following product documentations at:

https://pubs.lenovo.com/st45-v3/pdf_files.html

- ***User Guide***
  - ***Rail Installation Guides***
    - Rail installation in a rack
  - Complete overview, system configuration, hardware components replacing, and troubleshooting.

    Selected chapters from *User Guide*:
    - ***System Configuration Guide*** **:** Server overview, components identification, system LEDs and diagnostics display, product unboxing, setting up and configuring the server.
    - ***Hardware Maintenance Guide*** **:** Installing hardware components, cable routing, and troubleshooting.

Support websites

This section provides driver and firmware downloads and support resources.

Support and downloads

- Drivers and Software download website for ThinkSystem ST45 V3
  - https://datacentersupport.lenovo.com/products/servers/thinksystem/st45v3/downloads/driver-list/
- Lenovo Data Center Forum
  - https://forums.lenovo.com/t5/Datacenter-Systems/ct-p/sv_eg
- Lenovo Data Center Support for ThinkSystem ST45 V3
  - https://datacentersupport.lenovo.com/products/servers/thinksystem/st45v3
- Lenovo License Information Documents
  - https://datacentersupport.lenovo.com/documents/lnvo-eula
- Lenovo Press website (Product Guides/Datasheets/White papers)
  - https://lenovopress.lenovo.com/
- Lenovo Privacy Statement
  - https://www.lenovo.com/privacy
- Lenovo Product Security Advisories
  - https://datacentersupport.lenovo.com/product_security/home
- Lenovo Product Warranty Plans

© Copyright Lenovo 2024, 2025

  - http://datacentersupport.lenovo.com/warrantylookup
- Lenovo Server Operating Systems Support Center website
  - https://datacentersupport.lenovo.com/solutions/server-os
- Lenovo ServerProven website (Options compatibility lookup)
  - https://serverproven.lenovo.com
- Operating System Installation Instructions
  - https://pubs.lenovo.com/thinksystem#os-installation
- Submit an eTicket (service request)
  - https://support.lenovo.com/servicerequest
- Subscribe to Lenovo Data Center Group product notifications (Stay up to date on firmware updates)
  - https://datacentersupport.lenovo.com/solutions/ht509500

Appendix C. Notices

Lenovo may not offer the products, services, or features discussed in this document in all countries. Consult your local Lenovo representative for information on the products and services currently available in your area.

Any reference to a Lenovo product, program, or service is not intended to state or imply that only that Lenovo product, program, or service may be used. Any functionally equivalent product, program, or service that does not infringe any Lenovo intellectual property right may be used instead. However, it is the user's responsibility to evaluate and verify the operation of any other product, program, or service.

Lenovo may have patents or pending patent applications covering subject matter described in this document. The furnishing of this document is not an offer and does not provide a license under any patents or patent applications. You can send inquiries in writing to the following:

Lenovo (United States), Inc.
8001 Development Drive
Morrisville, NC 27560
U.S.A.
Attention: Lenovo Director of Licensing

LENOVO PROVIDES THIS PUBLICATION “AS IS” WITHOUT WARRANTY OF ANY KIND, EITHER EXPRESS OR IMPLIED, INCLUDING, BUT NOT LIMITED TO, THE IMPLIED WARRANTIES OF NON-INFRINGEMENT, MERCHANTABILITY OR FITNESS FOR A PARTICULAR PURPOSE. Some jurisdictions do not allow disclaimer of express or implied warranties in certain transactions, therefore, this statement may not apply to you.

This information could include technical inaccuracies or typographical errors. Changes are periodically made to the information herein; these changes will be incorporated in new editions of the publication. Lenovo may make improvements and/or changes in the product(s) and/or the program(s) described in this publication at any time without notice.

The products described in this document are not intended for use in implantation or other life support applications where malfunction may result in injury or death to persons. The information contained in this document does not affect or change Lenovo product specifications or warranties. Nothing in this document shall operate as an express or implied license or indemnity under the intellectual property rights of Lenovo or third parties. All information contained in this document was obtained in specific environments and is presented as an illustration. The result obtained in other operating environments may vary.

Lenovo may use or distribute any of the information you supply in any way it believes appropriate without incurring any obligation to you.

Any references in this publication to non-Lenovo Web sites are provided for convenience only and do not in any manner serve as an endorsement of those Web sites. The materials at those Web sites are not part of the materials for this Lenovo product, and use of those Web sites is at your own risk.

Any performance data contained herein was determined in a controlled environment. Therefore, the result obtained in other operating environments may vary significantly. Some measurements may have been made on development-level systems and there is no guarantee that these measurements will be the same on generally available systems. Furthermore, some measurements may have been estimated through extrapolation. Actual results may vary. Users of this document should verify the applicable data for their specific environment.

© Copyright Lenovo 2024, 2025

Trademarks

LENOVO, THINKSYSTEM, Flex System, System x, NeXtScale System, xArchitecture, ThinkEdge, and Neptune are trademarks of Lenovo.

Intel and Intel Xeon are trademarks of Intel Corporation in the United States, other countries, or both.

Internet Explorer, Microsoft, and Windows are trademarks of the Microsoft group of companies.

Linux is a registered trademark of Linus Torvalds.

All other trademarks are the property of their respective owners. © 2018 Lenovo.

Important notes

Processor speed indicates the internal clock speed of the processor; other factors also affect application performance.

CD or DVD drive speed is the variable read rate. Actual speeds vary and are often less than the possible maximum.

When referring to processor storage, real and virtual storage, or channel volume, KB stands for 1 024 bytes, MB stands for 1 048 576 bytes, and GB stands for 1 073 741 824 bytes.

When referring to hard disk drive capacity or communications volume, MB stands for 1 000 000 bytes, and GB stands for 1 000 000 000 bytes. Total user-accessible capacity can vary depending on operating environments.

Maximum internal hard disk drive capacities assume the replacement of any standard hard disk drives and population of all hard-disk-drive bays with the largest currently supported drives that are available from Lenovo.

Maximum memory might require replacement of the standard memory with an optional memory module.

Each solid-state memory cell has an intrinsic, finite number of write cycles that the cell can incur. Therefore, a solid-state device has a maximum number of write cycles that it can be subjected to, expressed as `total bytes written` (TBW). A device that has exceeded this limit might fail to respond to system-generated commands or might be incapable of being written to. Lenovo is not responsible for replacement of a device that has exceeded its maximum guaranteed number of program/erase cycles, as documented in the Official Published Specifications for the device.

Lenovo makes no representations or warranties with respect to non-Lenovo products. Support (if any) for the non-Lenovo products is provided by the third party, not Lenovo.

Some software might differ from its retail version (if available) and might not include user manuals or all program functionality.

Electronic emission notices

When you attach a monitor to the equipment, you must use the designated monitor cable and any interference suppression devices that are supplied with the monitor.

Additional electronic emissions notices are available at:

https://pubs.lenovo.com/important_notices/

Taiwan Region BSMI RoHS declaration

單元 Unit	限用物質及其化學符號 Restricted substances and its chemical symbols					
	鉛Lead (PB)	汞Mercury (Hg)	鎘Cadmium (Cd)	六價鉻 Hexavalent chromium (Cr^{+6})	多溴聯苯 Polybrominated biphenyls (PBB)	多溴二苯醚 Polybrominated diphenyl ethers (PBDE)
機架	○	○	○	○	○	○
外部蓋板	○	○	○	○	○	○
機械組合件	–	○	○	○	○	○
空氣傳動設備	–	○	○	○	○	○
冷卻組合件	–	○	○	○	○	○
內存模組	–	○	○	○	○	○
處理器模組	–	○	○	○	○	○
電纜組合件	–	○	○	○	○	○
電源供應器	–	○	○	○	○	○
儲備設備	–	○	○	○	○	○
印刷電路板	–	○	○	○	○	○

備考1. 〝超出0.1 wt %〞及〝超出0.01 wt %〞係指限用物質之百分比含量超出百分比含量基準值。

Note1 : "exceeding 0.1wt%" and "exceeding 0.01 wt%" indicate that the percentage content of the restricted substance exceeds the reference percentage value of presence condition.

備考2. 〝○〞係指該項限用物質之百分比含量未超出百分比含量基準值。

Note2 : "○"indicates that the percentage content of the restricted substance does not exceed the percentage of reference value of presence.

備考3. 〝-〞係指該項限用物質為排除項目。

Note3 : The "-" indicates that the restricted substance corresponds to the exemption.

Taiwan Region import and export contact information

Contacts are available for Taiwan Region import and export information.

委製商/進口商名稱: 台灣聯想環球科技股份有限公司
進口商地址: 台北市南港區三重路 66 號 8 樓
進口商電話: 0800-000-702

China Energy Label (CEL)

本产品的中国能效标识加施在服务器产品本体上。
中国能效标识中的配置类型Type 1、Type 2、Type 3分别对应能效等级1、2、3级的产品配置。同一规格型号下产品配置会有所不同。（此描述仅适用于中国能效范围内的产品）

