Overview

HP Engage One Pro G2 All-In-One system

FRONT VIEW



Overview

REAR VIEW



Overview

HP Engage One Pro G2 Column hub

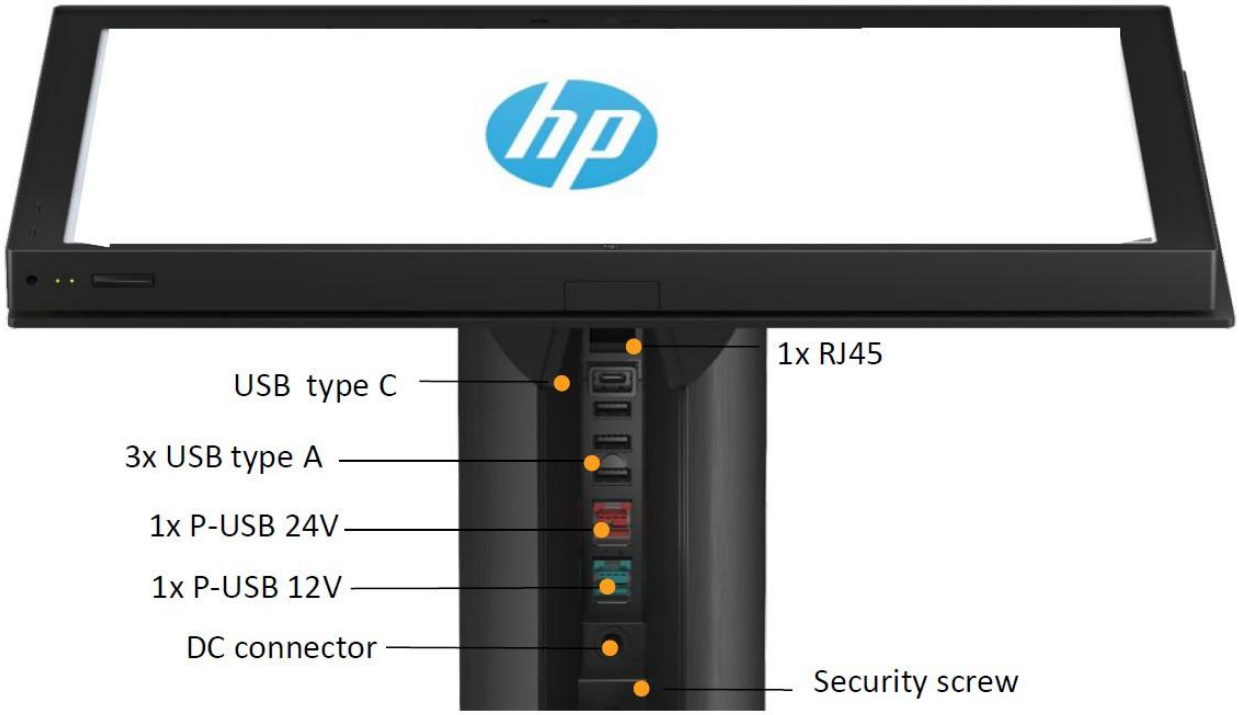

IMPORTANT: To avoid damage to the computer, DO NOT plug a telephone cable into the cash drawer jack.

Overview

HP Engage One Pro G2 VESA hub

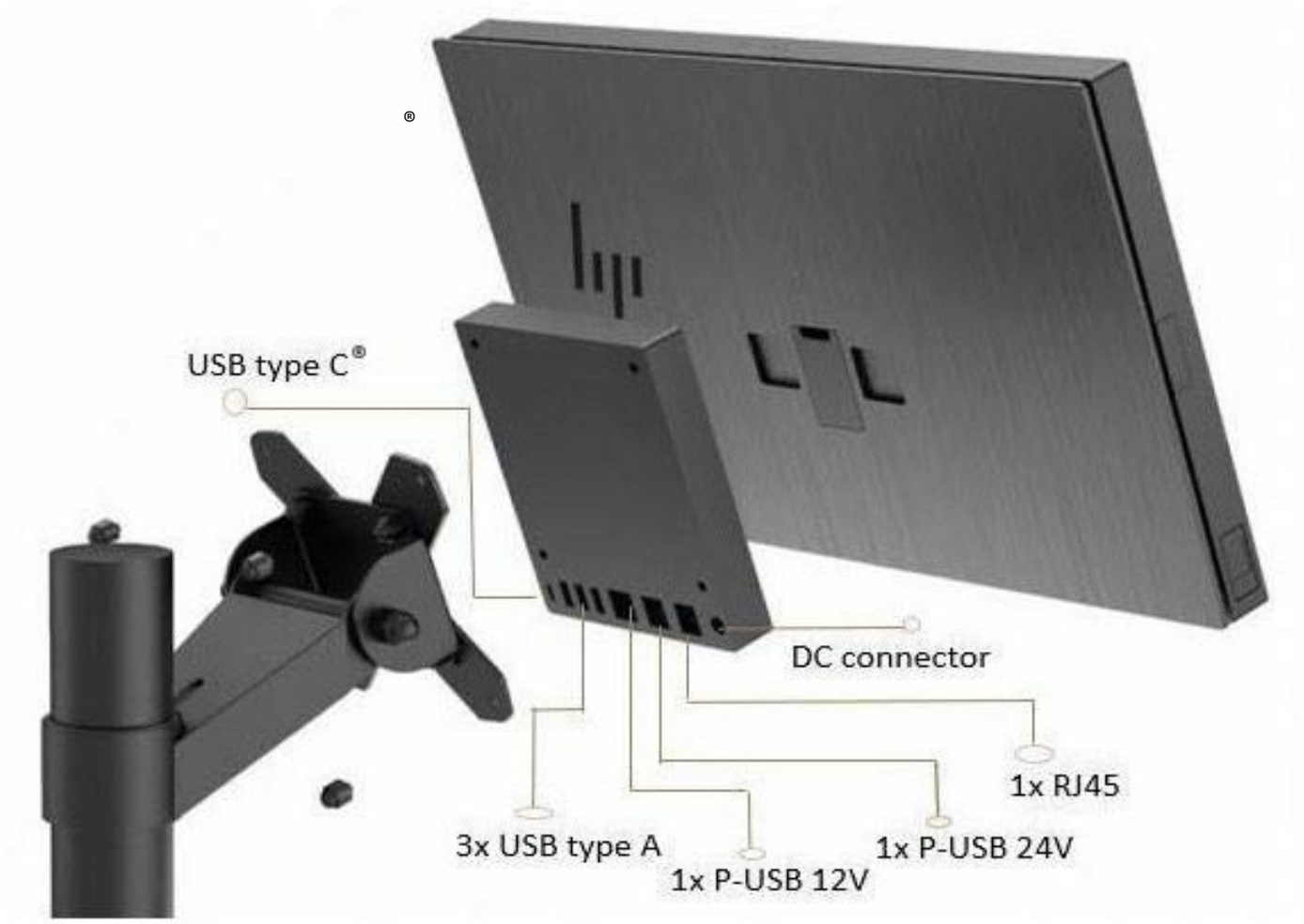

IMPORTANT: To avoid damage to the computer, DO NOT plug a telephone cable into the cash drawer jack.

Overview

HP Engage One Pro G2 Advanced Fan-less Hub



IMPORTANT: To avoid damage to the computer, DO NOT plug a telephone cable into the cash drawer jack.

ENGAGE ONE PRO USB-A (HUB-LESS) DONGLE

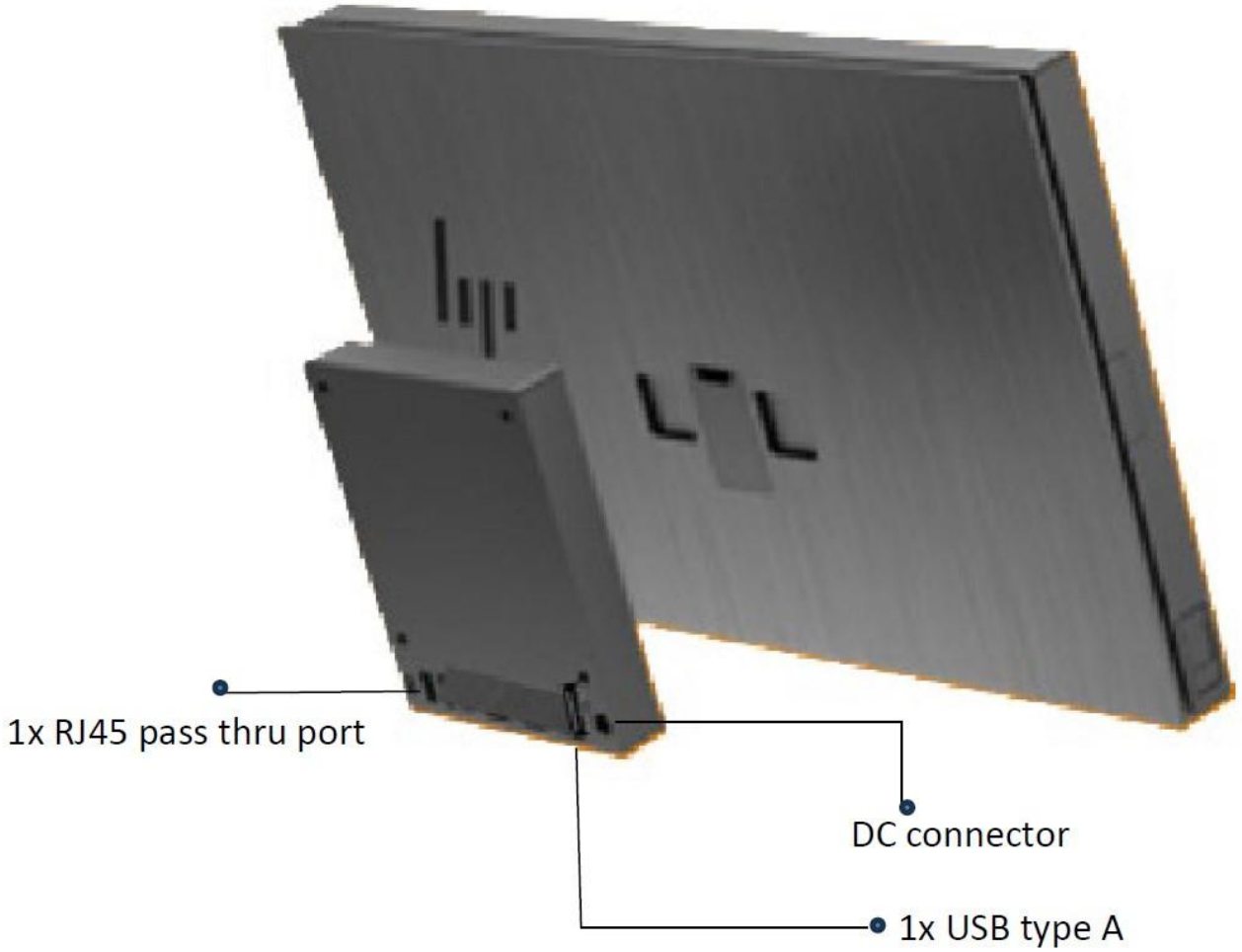

IMPORTANT: To avoid damage to the computer, DO NOT plug a telephone cable into the cash drawer jack.

Overview

Component Breakdown

1. Head unit screen sizes: 3 Choices
   15.6”, 19.5”, 23.8”
   Landscape or portrait orientation
2. Stand: 3 choices:
   Advanced stand,
   Pro stand,
   Slim VESA wall mount
3. Stability Base Plate or Counter mount & U-Shape Adapter
4. Hub: 4 Options based on I/ O requirements:
   Column hub,
   Advance hub,
   VESA mount hub,
   Hub-less

Not shown: Head unit connects with hub through a 140W Cable with secure screwed to connectivity base

Overview

Component Breakdown

HP Engage One Pro G2 Stand Features

1. Advanced Stand-Dual hinge with 12º vertical associate side flip to 140º on customer side



2. Engage One Pro stand- tilt 40° – 120°



Component Breakdown

HP Engage One Pro G2 Stand Features

3. HP Engage One Pro G2 AiO Slim VESA mount (100x100mm)

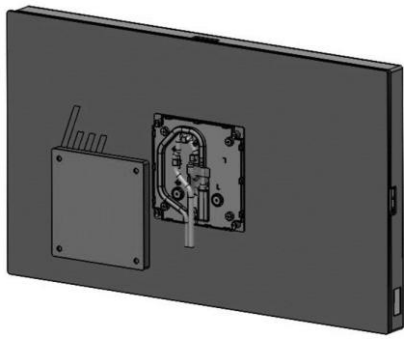



4. HP Engage One Pro G2 AiO Advanced* Stand Clean Counter Mount No stability plate- includes Counter Mounting Bracket** (Requires 94mm hole)



5. HP Engage One Pro G2 AiO System Advanced* stand with Stability Base Plate



Overview

At A Glance

- Choice of 2 colors: Ebony Black & Ceramic White*
  *White only available in 15.6” and 23.8”
- Choice of 2 orientations: Landscape & portrait
- With or without Camera
- Choice of 3 Long lifecycle performance All-in-One (AiO) Retail System for retail and hospitality markets operator display:
  - 15.6" diagonal, FHD(1920 x 1080), touch, IPS, UWVA, anti-glare, 400 nits, 45% NTSC
  - 19.5" diagonal, FHD(1920 x 1080), touch, VA, UWVA, anti-glare, 450 nits, 72% NTSC
  - 23.8" diagonal, FHD(1920 x 1080), touch, IPS, UWVA, anti-glare, 625 nits, 72% NTSC
    Note: Actual brightness will be lower with touch screen
- Choice of 2 column stand:
  - HP Engage One Pro G2 Advanced stand
  - HP Engage One Pro stand
- Choice of Mounting:
  - Clean counter- Place the connectivity hub under the counter
  - All together- Place the hub directly under the stand
  - Slim VESA wall mount- Place the head unit on the wall
  - Pole mount- -Place the head unit on a single or back-to-back pole
- Intel® Q670E chipset, 35W Processors
- Processor choices:
  Intel® Celeron® G Series
  - Intel® Celeron® G6900TE

  Intel® Core™ 14th Generation
  - Intel® Core™ i3 14th generation processor
  - Intel® Core™ i5 14th generation processor
  - Intel® Core™ i7 14th generation processor
- Integrated: Intel® UHD Graphics 710 on Celeron; Intel® UHD Graphics 730 on i3 and i5, Intel® UHD Graphics 770 on i7
- Intel® Ethernet Connection I219-LM GbE, vPro® integrated network connection from head unit
- RTL8153CH Ethernet Connection from Advanced hub
- Intel® Wi-Fi 7 BE200 and Bluetooth® 5.4 wireless card, vPro®;
- Intel® Wi-Fi 7 BE200 and Bluetooth® 5.4 wireless card, non-vPro®
- Intel® WI-FI 6E AX211 WI-FI 6E and Bluetooth® 5.3 wireless card, non-vPro®
- Operating System choices:
  - Windows 11 Pro 64-bit / Windows 10 IoT Enterprise 2021 LTSC 64 / Windows 11 IoT Enterprise 2024 LTSC 64
  - FreeDOS 3.0
  - SUSE Linux® Enterprise Server 15
  - Google ChromeOS Flex
- Connectivity Base Choices
  - HP Engage One Column hub:
  - HP Engage One VESAhub
  - HP Engage One Advanced Fan-less hub
  - Hub-less
- Integrated peripheral options (can also be purchased and installed separately)
  - HP Engage One Pro MSR
  - HP Engage One Pro G2 Bar Code Scanner (choose between 3 locations: left, right, bottom) of the head unit
  - HP Engage One Pro Fingerprint Reader
  - HP Engage One Pro 6x6 Customer facing display with 2x20 line display emulation **
    **The 2x20 line display emulation can be used on 6.6” CFD and future CFDs for Engage One Pro Virtual Line Display will work with any display. It defaults to 2x20, it can also be used for any other size line display such as 3x16 or 3x20, 5x10
  - Virtual Line Display will work with any display. It defaults to 2x20,, it can also be used for any other size line display such as 3x16 or 3x20, 5x10
  - Industry-standard 100mm VESA mounting pattern allows for flexible use without the optional stand (Mounting hardware sold separately)

Overview

- (2) Two DDR5 Memory Slots (64 GB Maximum)
- Trusted Platform Module (TPM2.0)
- HP BIOSphere with HP Sure Start technology
- Cable Management Features-RJ45 extension
- ENERGYSTAR® certified configurations available, EU Compliant, RoHS2 Compliant, EPEAT® registered configurations available
- Standard Warranty Options:
    a. 1/1/1 Standard Warranty
    b. 90/90/90 available for North America
    c. 3/3/3 Available for OEMs
    d. Plus, Optional Extended Warranty
- 2 SODIMM Memory slots with up to 64 GBDDR5 SDRAM Transfer rates up to 5600 MT/s.
- 1x M.2 WLAN expansion slot
- 2xM.2 Storage slots
- 256 GBto up to 4 TB PCIe® NVMe SSD First drive
- 256 GBto up to 4 TB PCIe® NVMe SSD Second drive
- Integrated HD audio with Realtek ALC3247 codec with standards internal speakers and stereo headphone jack, 2W)
- HP Credential Guard; HP Device Guard; HP Support Assistant; HP BIOSphere with Sure Start Generation 6.0
- HP Sure Sense; HP Sure Click (Standard); HP Sure Admin; HP MIK(SCCM Integration); HP Image Assistant; HP BIOSphere with Sure Start Gen6; HP Client Security Manager Gen7; HP Sure Recover Gen3; HP Sure Run Gen3
- Intel® vPro® with AMT11.0;TPM2.0;HP System Software Manager; HP Image Assistant; HP Client Security Manager
- Display head Ports and Connectors: 1 audio-out; 2 USBType-A5Gbps signaling rate; 2 USB Type- A 5Gbps signaling rate (HP Sleep and Charge); 1 RJ-45 USBNIC;1 140Wdata port Side: 1 Security lock slot
- Choice of 3 connectivity hubs:
    - HP Engage One Pro G2 Column hub:
        - 3x USB Type-A 5Gbps signaling rate
        - 1x RJ-45 NIC
        - 1x DCconnector
        - 3x USB 2.0 Type-A
        - 1x USB Type-C® 5Gbps signaling rate (27 WPower Delivery, Alt Mode DisplayPort™)
        - 1x 140Wdata port
        - 1x P-USB 12V
        - 1x P-USB 24V
    - HP Engage One Pro G2 VESA hub:
        - 3x USB Type-A 5Gbps signaling rate
        - 1x RJ-45 NIC
        - 1x DCconnector
        - 3x USB 2.0 Type-A
        - 1x USB Type-C® 5Gbps signaling rate (27 WPower Delivery, Alt Mode DisplayPort™)
        - 1x 140Wdata port
        - 1x P-USB 12V
        - 1x P-USB 24V
    - HP Engage One Pro G2 Advance fan-less hub
        - 1x cash drawer connector
        - 2x power serials
        - 4x USB Type-A 5Gbps signaling rate
        - 1x RJ-45 NIC
        - 1x DCconnector
        - 1x USB Type-C® 5Gbps signaling rate (27 WPower Delivery, Alt Mode DisplayPort™)
        - 1 x140Wdata port]
        - 2x P-USB 12V
        - 1x P-USB 24V
    - Combination of Advance hub with Column hub; Combination of Advance hub with VESA hub.

Overview

- HP Engage One Pro G2 Hub-less
  - 1x USB type-A port and 1xRJ45 pass thru port

NOTE: See important legal disclosures for all listed specs in their respective features sections.

SECURITY DISCLAIMERS:

HP Essential Security requires Windows 10, includes various HP Sure security features and is available on HP Elite and Workstation products. See product details for included security features.

HP Manageability Integration Kit can be downloaded from http://www8.hp.com/us/en/ads/clientmanagement/overview.html.

HP Sure Recover Gen3 is available on select HP PCs and requires an open network connection. Not available on platforms with multiple internal storage drives. You must back up important files, data, photos, videos, etc. before using HP Sure Recover to avoid loss of data. HP Sure Recover Gen3 requires an open network connection. You must back up important files, data, photos, videos, etc. before use to avoid loss of data.

HP Sure Start Gen6 is available on select HP PCs.

HP Sure Click is only supported on Intel Core i3, i5, and i7 processors.

HP Sure Click, Sure Run, Sure Recover & Sure Sense is supported on Win 10 Pro & Win 10 IoT Enterprise 2019 LTSC; but not on Win 10 IoT Enterprise 2016 LTSB.

For the methods outlined in the National Institute of Standards and Technology Special Publication 800-88 "Clear" sanitation method. HP Secure Erase does not support platforms with Intel® Optane™.

HP BIOSphere Gen6 is available on select HP Pro and Elite PCs. See product specifications for details. Features may vary depending on the platform and configurations.

Features

OPERATING SYSTEM

Preinstalled	Windows 11 Pro 64-bit [1] Windows 10 IoT Enterprise 2021 LTSC Windows 11 IoT Enterprise 2024 LTSC Google ChromeOS Flex FreeDOS 3.0
Certified	SUSE Linux®Enterprise Server 15[2]

NOTE:

1. Not all features are available in all editions or versions of Windows. Systems may require upgraded and/or separately purchased hardware, drivers, software or BIOS update to take full advantage of Windows functionality. Windows 10 is automatically updated, which is always enabled. ISP fees may apply and additional requirements may apply over time for updates. See http://www.windows.com
2. SUSE Enterprise Linux 15 SP6 YES Certification on a single platform configuration. More information about SUSE

   YES certification on https://http://www.suse.com/partners/ihv/yes/

   The following features are not supported by SUSE Linux Enterprise Desktop:

   - Power Management features
   - Multi-touch capabilities
   - Systems configured with Linux do not qualify for ENERGY STAR®

3. Only available on certain configurations (please ask sales representative)

Adapters and Cables

- HP USB-C® to DisplayPort
- HP USB-C® to HDMI
- HP USB-C® to VGA
- USB to Serial Port Adapter

NETWORKING/COMMUNICATIONS

- Intel® Wi-Fi 7 BE200 and Bluetooth® 5.4 wireless card, vPro®;*, **
- Intel® Wi-Fi 7 BE200 and Bluetooth® 5.4 wireless card, non-vPro® ;*, **
- Intel® WI-FI 6E AX211 WI-FI 6E and Bluetooth® 5.3 wireless card, non-vPro®;*, **
- Realtek RTL8153CH 10/ 100/1000MGbE Lan Chip:
  - Supports Ethernet speeds: 10Mbps, 100Mbps, and 1Gbps
  - USB Interface: USB 3.0 for faster data transfer rates compared to USB 2.0
  - Auto-negotiation: Automatically negotiates the best speed (10Mbps, 100Mbps, or 1Gbps) with a connected device
  - Compact size: USB form factor makes it suitable for laptops and desktops with limited space
  - Power Management: Supports features like ACPI and Wake-on-LAN for efficient power consumption

*Wireless access point and Internet service required and not included. Availability of public wireless access points limited. The specifications for the 802.11ax WLAN are draft specifications and are not final. If the final specifications differ from the draft specifications, it may affect the ability of the PC to communicate with 802.11ax WLAN devices. Wi-Fi 7 requires a wireless router, sold separately, that supports 802.11be (Wi-Fi 7). Only available in countries where 802.11be is supported.

Features

** Wi-Fi 7 is designed to support gigabit data rate when transferring files between two devices connected to the same router. Requires a wireless router, sold separately, that supports 80MHz and higher channels.
***Wireless access point and internet service required and sold separately. Availability of public wireless access points limited. Wi-Fi 7 (802.11be) is backwards compatible with prior 802.11ax (Wifi6)specs.

NEAR FIELD COMMUNICATION

NXP NPC300 Near Field Communication Module

PORTS

HP Engage One Pro G2 Head unit I/O:

- 1x 140W data port (PDO cable to Head Unit)[1]
- 1x RJ45 vPro NIC
- 1 x 3.5mm Audio Jack support CTIA type
- 4x Integrated USB-A Gen1 Peripherals ports
- 2x USB3.2 G1 Type-A / 900mA
- 2x USB3.2 G1 Type-A / 2.2A

Internal access door for the SSD and USB-Port Type A on Motherboard
Dimensions for USB-Port Type A:
55mm L includes plug / 16mm W / 8mm

HP Engage One Pro G2 Column hub I/O

- 3x USB3.2 G2 Type-A / 900mA
- 1x RJ45 (cable direct from Head unit)
- 1x DC connector
- 1x P-USB 12V
- 1x P-USB 24V
- 1x USB3.2 G1 Type-C® DP Alt Mode / 27W
- 1x 140W data port (PDO cable to Head Unit)[1]

HP Engage One Pro G2 VESA hub I/O

- 3x USB3.1 G1 Type-A / 900mA
- 1x RJ45 (cable direct from Head unit)
- 1x DC connector
- 1x P-USB 12V
- 1x P-USB 24V
- 1x USB3.2 G1 Type-C® DP Alt Mode / 27W
- 1x 140W data port (PDO cable to Head Unit) [1]

HP Engage One Pro G2 Advanced Fan-less hub I/O

- 1x RJ12 Cash Drawer
- 2x 12V P-USB
- 1x 24V P-USB
- 2x DB9 P-Serial
- 4x USB3.2 G1 Type A/900mA
- 1x RJ45 USB NIC
- 1x DC connector
- 1x USB 3.1 G2 Type-C® DP Alt Mode / 27W
- 1x 140W data port (PDO cable to Head Unit) [1]

HP Engage One Pro G2 Hubless I/ O

- 1x USB Type A
- 1x DC connector

- 1x RJ45 NIC

NOTE 1: HP 140W port only compatible with the 140W cable included with the product. Cable required for the HP Engage One Pro G2 to operate

USB SPECIFICATION

Speed	Terminology
Hi-Speed USB 480Mbps signaling rate	USB 2.0
USB 5Gbps signaling rate	USB 3.2 Gen 1

SOFTWARE COMPONENTS AND APPLICATIONS

BIOS

- **HP BIOSphere Gen6**
  - Protect and manage the foundation of your POS System
  - Building on over a decade of BIOS security leadership, HP BIOSphere Gen6 offers an ecosystem of protections to help defend your system, including automated protections, customizable safeguards, and easy manageability
- **HP Secure Erase**[1]
- **Device Guard Enablement**

Additional features of the HP BIOS Features

- Power-On password

Software

- HP Privacy Settings
- HP Setup Integrated OOBE
- HP Easy Clean[2]
- HP Notifications
- myHP

Manageability Features

- HP Driver Packs
- HP Manageability Integration Kit[3]
- HP Image Assistant
- HP Smart Support[4]

Notes:

1. For the methods outlined in the National Institute of Standards and Technology Special Publication 800-88 "Clear" sanitation method. HP Secure Erase does not support platforms with Intel® Optane™.
2. HP Easy Clean requires Windows and will disable the keyboard, display and touchpad only. Ports are not disabled.
3. HP Manageability Integration Kit can be downloaded from http://www.hp.com/go/clientmanagement.
4. HP Smart Support is available to commercial customers through your HP Service Representative and HP Factory Configuration Services; or it can be downloaded at: http://www.hp.com/smart-support. HP Smart Support automatically collects the telemetry necessary upon initial boot of the product to deliver device-level configuration data and health insights.

Security Management

- HP BIOSphere Gen 6[1]
- HP Client Security Manager Gen7[6]

Features

- HP Multi-Factor Authenticate -
- HP SpareKey -
- HP Sure Start[6]
- HP Sure Run[4] -
- HP Sure Recover[4]-Recover quickly and minimize downtime
    - Driven by the HP Endpoint Security Controller, HP Sure Recover enables users to reimage their systems quickly and securely using only a network connection – no IT intervention needed.

Other Security Features

- HP Engage One AiO System Biometric Fingerprint Reader (optional)
- Bolt to counter mechanism
- VESA mounting
- Keyed Cable Lock
- Trusted Platform Module TPM 2.0
- Drive lock
- USB enable/disable (via BIOS)
- Power-on password (via BIOS)
- Setup password (via BIOS)
- Tamper Resistant Screw affixed on stand of the system unit, used to secure display head to stand without Quick Released
- HP vPRO Support

Notes:

1. HP BIOSphere Gen6 features may vary depending on the platform and configuration.
2. HP Secure Erase for the methods outlined in the National Institute of Standards and Technology Special Publication 800-88 "Clear" sanitation
3. agent is shipped turned off, and will be activated when customers activate a purchased subscription. Subscriptions can be purchased for terms ranging multiple years. Service is limited, check with Absolute for availability outside the U.S. The Absolute Recovery Guarantee is a limited warranty. Certain conditions apply. For full details visit: **http://www.absolute.com/company/legal/agreements/computrace- agreement.** Data Delete is an optional service provided by Absolute Software. If utilized, the Recovery Guarantee is null and void. In order to use the Data
4. HP Sure Click, Sure Run, Sure Recover & Sure Sense is supported on Win 10 Pro & Win 10 IoT Enterprise 2019 LTSC; but not on Win 10 IoT Enterprise 2016 LTSB.
5. HP Client Security Manager Gen7 requires Windows
6. HP Sure Start Gen6 is available on select HP PCs.

PROCESSORS

- Intel® Celeron® G6900TE with Intel® UHD710 Graphics (2.4 GHz P-core base frequency, 4 MB L3 cache, 2 P-cores, 2 threads)
- Intel® Core™ i3-14100T with Intel® UHDGraphics 730 (2.7 GHz P-core base frequency, up to 4.4 GHz P-core Max Turbo frequency,12 MB L3 cache, 4 P-cores and 0 E-cores, 8 threads)
- Intel® Core™ i5-14500T with Intel® UHD770 Graphics (1.2 GHz E-core base frequency, 1.7 GHz P-core base frequency, up to 3.4 GHz E-core Max Turbo frequency, up to 4.8 GHz P-core Max Turbo frequency, 24 MB L3 cache, 6 P-cores and 8 E-cores, 20 threads), supports Intel® vPro® Technology
- Intel® Core™ i7-14700T with Intel® UHDGraphics 770 (0.9 GHz E-core base frequency, 1.3 GHz P-core base frequency, up to 3.7 GHz E-core Max Turbo frequency, up to 5.0 GHz P-core Max Turbo frequency, 33 MB L3 cache, 8 P-cores and 12 E-cores, 28 threads), supports Intel® vPro® Technology

PROCESSORS FAMILY

14th Gen 35W Intel® Core™ processors

Features

NOTES:

1. Multi-core is designed to improve performance of certain software products. Not all customers or software applications will necessarily benefit from use of this technology. Performance and clock frequency will vary depending on application workload and your hardware and software configurations. Intel's numbering, branding and/or naming is not a mea configuration surement of higher performance.
2. Intel® Turbo Boost technology requires a PC with a processor with Intel Turbo Boost capability. Intel Turbo Boost performance varies

depending on hardware, software and overall system. See http://http://www.intel.com/technology/turboboost for more information.

3. For full Intel® vPro® functionality, Windows 10 Pro 64 bit, a vPro supported processor, vPro enabled chipset, vPro enabled wired LAN and/or WLAN card and TPM 2.0 are required. Some functionality requires additional 3rd party software in order to run. See http://intel.com/vpro

INTEL® 14th GENERATION CORE™ vPRO ® PROCESSORS

Intel® Core™ i5-14500T with Intel® UHD770 Graphics (1.2 GHz E-core base frequency, 1.7 GHz P-core base frequency, up to 3.4 GHz E-core Max Turbo frequency, up to 4.8 GHz P-core Max Turbo frequency, 24 MB L3 cache, 6 P-cores and 8 E-cores, 20 threads), supports Intel® vPro® Technology

Intel® Core™ i7-14700T with Intel® UHDGraphics 770 (0.9 GHz E-core base frequency, 1.3 GHz P-core base frequency, up to 3.7 GHz E-core Max Turbo frequency, up to 5.0 GHz P-core Max Turbo frequency, 33 MB L3 cache, 8 P-cores and 12 E-cores, 28 threads), supports Intel® vPro® Technology

The HP Engage One Pro G2 AiO System Retail System features this technology and includes processors that are part of the Intel® Stable Image. Platform Program (SIPP) designed to ensure the stability promise inherent in the value proposition of the HP Engage One Pro G2 AiO System Retail System.

Intel® Advanced Management Technology (AMT) v11.6

An advanced set of remote management features and functionality which provides network administrators the latest and most effective tools to remotely discover, heal, and protect networked client systems regardless of the system's health or power state.

- AMT 11.6 includes the following advanced management function
- Power Management (on, off, reset
- Hardware Inventory (includes BIOS and firmware revisions
- Hardware Alerting
- Agent Presence
- System Defense Filters
- SOL/USBR
- Cisco NAC/SDN Support
- ME Wake-on-LAN • DASH 1.1 compliance
- IPv6 Support
- Fast Call for Help - a client inside or outside the firewall may initiate a call for help via BIOS screen, periodic connections, or alert triggered connection
- Remote Scheduled Maintenance - pre-schedule when the PC connects to the IT or service provider console for maintenance. Remote PCs can get required patches, be inventoried, etc. by connecting to their IT console or Service Provider when it's convenient
- Remote Alerts - automatically alert IT or service provider if issues arise
- Access Monitor - Provides oversight into Intel® AMT actions to support security requirements
- PC Alarm Clock
- Microsoft NAP Support
- Host-based set-up and configuration
- Management Engine (ME) firmware roll back
- Wireless AMT functionality on Desktop (WoDT)
- Enhanced KVM resolution

*Some functionality of this technology, such as Intel Active management technology and Intel Virt ualization technology, requires additional 3rd party software in order to run. Availability of future "virtual appliances" applications for Intel vPro® technology is dependent on 3rd party software providers. Compatibility with future "virtual appliances" is yet to be determined.

** Intel® Active Management Technology requires an Intel®AMT-enabled chipset, network hardware and software, as well as connection with a power source and a corporate network connection. Setup requires configuration by the purchaser and may require scripting with the management console or further integration into existing security frameworks to enable certain functionality. It may also require modifications of implementation of new business processes.

OPERATOR DISPLAY*

15.6" Diagonal Wide Aspect, Projective Capacitive, Anti-glare, Anti-smudge, IPS Display with Projective Capacitive Touch

Touch Technology	Projected Capacitive Touchscreen
Resolution	1920 x 1080
Aspect Ratio	16:9
Max Color	16.2M
Brightness	Typical 400 Nits*
Contrast Ratio	Typical 800:1
Pixel Pitch	0.17925 x 0.17925mm
Viewing Angle	Horizontal 178º, Vertical 178º
Response rate	25ms (Typical On / Off)
Backlight	LED
Operating Temperature range	0 to 50ºC (+ 50ºC as panel surface temperature)

19.5" Diagonal Wide Aspect, Projective Capacitive, Anti-glare, Anti-smudge, UWVA, VA Display, with discrete Projective Capacitive Touch

Touch Technology	Projected Capacitive Touchscreen
Resolution	1920 x 1080
Aspect Ratio	16:9
Max Color	16.7M
Brightness	Typical 450 Nits*
Contrast Ratio	Typical 3000:1
Pixel Pitch	0.2265 x 0.2210mm
Viewing Angle	Horizontal 170º, Vertical 170º
Response rate	25ms (Typical On / Off)
Backlight	LED
Operating Temperature range	0 to 50ºC (+ 50ºC as panel surface temperature)

23.8" Diagonal Wide Aspect, Projective Capacitive, Anti-glare, Anti-smudge, IPS Display with discrete Projective Capacitive Touch

Touch Technology	Projected Capacitive Touchscreen
Resolution	1920 x 1080
Aspect Ratio	16:9
Max Color	16.7M
Brightness	Typical 625 Nits*
Contrast Ratio	1000:1
Pixel Pitch	274.5 um x 2274.5 um
Viewing Angle	Horizontal 178º, Vertical 178º
Response rate	14ms (Typical On / Off)
Backlight	LED
Operating Temperature range	0 to 50ºC (+ 50ºC as panel surface temperature)

*__NOTE:__ Nits is the measure of the typical brightness of the panel as specified, prior to anti-glare coating

*__NOTES:__

Technical Specifications

Portrait Display.With a Portrait Head Unit, the pre-OS environment will be displayed 90° in Landscape. Once the Windows OS loads, then the display will show Portrait.
*All specifications represent the typical specifications provided by HP's component manufacturers; actual performance may vary either higher or lower.

Technical Specifications-Graphics

Intel® HD Graphics (integrated)

Integrated Graphics

Intel® UHD Graphics 770 (integrated on 14th gen Core i7/ i5)
Intel® UHD Graphics 730 (integrated on 14th gen Core i3)
Intel® UHD Graphics 710 (integrated on G Series Celeron® G6900TE)

DisplayPort

DisplayPort over the optional USB-C® module

Memory

The actual amount of maximum graphics memory can be >6GB. System memory is allocated for graphics as needed using Intel's Dynamic Video Memory Technology (DVMT), to provide an optimal balance between graphics and system memory use.

Maximum Graphic Memory

Windows 10 >6 GB

Maximum Color Depth

64bits/ pixel
10th Generation Intel® Core™ processors:

- Next Generation Intel® Clear Video Technology HDSupport is a collection of video playback and enhancement features that improve the end user's viewing experience
  - Encode/ transcode HDcontent
  - Playback of high-definition content including Blu-ray Disc
  - Superior image quality with sharper, more colorful images

Graphics/Video API Support

- DirectX Video Acceleration (DXVA) support for accelerating video processing o Full AVC/VC1/MPEG2/HEVC HW Decode
- Advanced Scheduler 2.0, 1.0
- Windows 11, Linux OS Support
- DirectX 12.1
- OpenGL 4.4
- Open CL 1.2 (Intel® HD Graphics 730)
- Open CL 1.2/2.0 (Intel® HD Graphics 710)

NOTE: the actual amount of maximum graphics memory can be less than the amounts listed above depending upon your computer's configuration.

Supported Display Resolutions and Refresh Rates

Note: Other resolutions may be available but are not recommended as they may not have been tested and qualified by HP

Resolution	Refresh Rate
640x480	60Hz 640 x 480 67Hz
640x480	72Hz
640x480	75Hz
720x400	70Hz
800x600	60Hz

Technical Specifications-Graphics

800x600	75Hz
1024x768	60Hz
1024x768	75Hz
1280x960	60Hz
1280x720	60Hz
1280x1024	60Hz
1280x1024	75Hz
1440x900	60Hz
1440x900	75Hz
1680x1050	60Hz
1920x1080	60Hz
3440x1440	60Hz 3440 x 1440 30Hz
2048x1536	60Hz
4096x2160	60Hz
4096x2160	60Hz

Technical Specifications-Memory

MEMORY

Type
DDR5-5600 SODIMM (transfer rates up to 5600 MT/s)
Maximum
64 GB
# of Slots
2 SODIMM
Memory Upgrades

- RAM8GB (1x8GB) DDR5 5600
- RAM8GB (1x8GB) DDR5 5600 PRC

- RAM16GB (1x16GB) DDR5 5600
- RAM16GB (2x8GB) DDR5 5600
- RAM16GB (1x16GB) DDR5 5600 PRC
- RAM16GB (2x8GB) DDR5 5600 PRC

- RAM32GB (1x32GB) DDR5 5600
- RAM32GB (2x16GB) DDR5 5600
- RAM32GB (1x32GB) DDR5 5600 PRC
- RAM32GB (2x16GB) DDR5 5600 PRC

- RAM64GB (2x32GB) DDR5 5600

NOTE: Memory speed 5600 MT/ s can be achieved via two SODIMMs per channel (2DPC) when populated with the same part number.

For systems configured with more than 3 GB of memory and a 32-bit operating system, all memory may not be available due to system resource requirements. Addressing memory above 4 GB requires a 64-bit operating system. Memory modules support data transfer rates up to 2400 MT/s; actual data rate is determined by the system's configured processor. See processor specifications for supported memory data rate.
CAUTION: You must shut down the Retail System and disconnect the power cord before adding or removing memory modules. Regardless of the power-on state, voltage is always supplied to the memory modules as long as the Retail System is plugged in to an active AC outlet. Adding or removing memory modules while voltage is present may cause irreparable damage to the memory modules or system board.

Technical Specifications-Storage

SOLID STATE STORAGE

Drive Bays : (2) M.2 PCIe x4 2280/2230 Combo (for storage)

PCIe NMVe Solid State Drives (SSD)[1]

- SSD 256GB 2280 PCIe NVMe Value
- 256GB PCIe 2280 NVMe Self Encrypted OPAL2 Value Solid State Drive
- SSD 512GB 2280 PCIe NVMe Value
- SSD 512GB 2280 PCIe-4x4 NVMe Three Layer Cell
- SSD 1TB 2280 PCIe NVMe Value
- SSD 1TB 2280 PCIe-4x4 NVMe Three Layer Cell
- SSD 2TB 2280 PCIe-4x4 NVMe Three Layer Cell
- 4TB PCIe-4x4 2280 NVMe Three Layer Cell double-sided M.2 Solid State Drive

Storage accelerator

- NVMe RAID 1

Notes:

1. Storage DriveLock does not work with Self-Encrypting or Optane based storage

NOTE: For hard drives and solid state drives, GB= 1 billion bytes. TB= 1 trillion bytes. Actual formatted capacity is less. Up to 36 GB (for Windows 10) of system disk is reserved for the system recovery software.

SSD 256G2280 PCIe NVMe Value

Capacity	256GB
Interface	PCIe NVMe
Form Factor	M.2
Height	2.38mm
Width	22mm
Length	80mm
Weight	<10g
Maximum Sequential Read	2000 MB/s ±20%
Maximum Sequential Write	900 MB/s ±20%
Logical Blocks	500,118,192
Operating Temperature	0° to 70°C (32° to 158°F) [ambient temp]
Features	Pyrite 2.0; TRIM; L1.2

NOTE: For hard drives and solid state drives, GB = 1 billion bytes. TB = 1 trillion bytes. Actual formatted capacity is less. Up to 36 GB (for Windows 10) of system disk is reserved for the system recovery software.

256GB PCIe 2280 NVMe Self Encrypted OPAL2 Value Solid State Drive

Capacity	256GB
Interface	PCIe NVMe
Form Factor	M.2
Height	2.38mm
Width	22mm

Technical Specifications-Storage

Length	80mm
Weight	<10g
Maximum Sequential Read	2000 MB/s ±20%
Maximum Sequential Write	900 MB/s ±20%
Logical Blocks	500,118,192
Operating Temperature	0° to 70°C (32° to 158°F) [ambient temp]
Features	TCG Opal 2.0; TRIM; L1.2

NOTE: For hard drives and solid state drives, GB = 1 billion bytes. TB = 1 trillion bytes. Actual formatted capacity is less. Up to 36 GB (for Windows 10) of system disk is reserved for the system recovery software.

512 GB M.2 2280 PCIe NVMe Three Layer Cell Value SSD

SSD 512 GB 2280 PCIe NVMe Value

Capacity	512GB
Interface	PCIe NVMe
Form Factor	M.2
Height	2.38mm
Width	22mm
Length	80mm
Weight	<10g
Maximum Sequential Read	2200 MB/s ±20%
Maximum Sequential Write	1000 MB/s ±20%
Logical Blocks	1,000,215,215
Operating Temperature	0° to 70°C (32° to 158°F) [ambient temp]
Features	Pyrite 2.0; TRIM; L1.2

NOTE: For hard drives and solid state drives, GB = 1 billion bytes. TB = 1 trillion bytes. Actual formatted capacity is less. Up to 36 GB (for Windows 10) of system disk is reserved for the system recovery software.

SSD 512GB 2280 PCIe-4x4 NVMe Three Layer Cell

Capacity	512GB
Interface	PCIe NVMe
Form Factor	M.2
Height	2.38mm
Width	22mm
Length	80mm
Weight	<10g
Maximum Sequential Read	6400 MB/s ±20%
Maximum Sequential Write	3500 MB/s ±20%
Logical Blocks	1,000,215,215
Operating Temperature	0° to 70°C (32° to 158°F) [ambient temp]

Technical Specifications-Storage

Features	Pyrite 2.0; TRIM; L1.2

NOTE: For hard drives and solid state drives, GB = 1 billion bytes. TB = 1 trillion bytes. Actual formatted capacity is less. Up to 36 GB (for Windows 10) of system disk is reserved for the system recovery software.

SSD 1TB 2280 PCIe NVMe Value

Capacity	1TB
Interface	PCIe NVMe
Form Factor	M.2
Height	2.38mm
Width	22mm
Length	80mm
Weight	<10g
Maximum Sequential Read	2200 MB/s ±20%
Maximum Sequential Write	1600 MB/s ±20%
Logical Blocks	2,000,409,264
Operating Temperature	0° to 70°C (32° to 158°F) [ambient temp]
Features	Pyrite 2.0; TRIM; L1.2

NOTE: For hard drives and solid state drives, GB = 1 billion bytes. TB = 1 trillion bytes. Actual formatted capacity is less. Up to 36 GB (for Windows 10) of system disk is reserved for the system recovery software.

SSD 1TB 2280 PCIe-4x4 NVMe Three Layer Cell

Capacity	1TB
Interface	PCIe NVMe
Form Factor	M.2
Height	2.38mm
Width	22mm
Length	80mm
Weight	<10g
Maximum Sequential Read	6400 MB/s ±20%
Maximum Sequential Write	5000 MB/s ±20%
Logical Blocks	2,000,409,264
Operating Temperature	0° to 70°C (32° to 158°F) [ambient temp]
Features	APST; ASPM L1.2; NVME spec 1.2

NOTE: For hard drives and solid state drives, GB = 1 billion bytes. TB = 1 trillion bytes. Actual formatted capacity is less. Up to 36 GB (for Windows 10) of system disk is reserved for the system recovery software.

SSD 2TB 2280 PCIe-4x4 NVMe Three Layer Cell

Capacity	2TB

Technical Specifications-Storage

Interface	PCIe NVMe
Form Factor	M.2
Height	2.38mm
Width	22mm
Length	80mm
Weight	<10g
Maximum Sequential Read	6400 MB/s ±20%
Maximum Sequential Write	5000 MB/s ±20%
Logical Blocks	4,000,797,360
Operating Temperature	0° to 70°C (32° to 158°F) [ambient temp]
Features	Pyrite 2.0; TRIM; L1.2

NOTE: For hard drives and solid state drives, GB = 1 billion bytes. TB = 1 trillion bytes. Actual formatted capacity is less. Up to 36 GB (for Windows 10) of system disk is reserved for the system recovery software.

4TB PCIe-4x4 2280 NVMe Three Layer Cell double-sided M.2 Solid State Drive

Capacity	4TB
Interface	PCIe NVMe
Form Factor	M.2
Height	2.38mm
Width	22mm
Length	80mm
Weight	<10g
Maximum Sequential Read	6400 MB/s ±20%
Maximum Sequential Write	5000 MB/s ±20%
Logical Blocks	8,001,594,720
Operating Temperature	0° to 70°C(32° to 158°F) [ambient temp]
Features	Pyrite 2.0; TRIM; L1.2

NOTE: For hard drives and solid state drives, GB = 1 billion bytes. TB = 1 trillion bytes. Actual formatted capacity is less. Up to 36 GB (for Windows 10) of system disk is reserved for the system recovery software.

4TB 2280 PCIe-3x4 NVMe TLC Solid State Drive

Unformat ted Capacit y	4TB
Interface	PCIe Gen 3
Form Factor	M.2

Technical Specifications-Storage

Height	2.38mm
Width	22mm
Lengt h	80mm
Weight	<10g
Maximum Sequential Read	Up to 6600MB/s
Maximum Sequent ial Write	Up to 5200MB/s
Logical Blocks	2,000,409,264
Operat ing Temperature	0° to 70°C(32° to 158°F) [ambient temp]

NOTE: For hard drives and solid state drives, GB = 1 billion bytes. TB = 1 trillion bytes. Actual formatted capacity is less. Up to 36 GB (for Windows 10) of system disk is reserved for the system recovery software.

Technical Specifications – Networking and Communications

Networking/Communications

Ethernet (RJ-45)

- Intel® I219-LMGigabit Network Connection LOM (standard)
- Realtek RTL8153CH

Wireless

- Intel® Wi-Fi 7 BE200 and Bluetooth® 5.4 wireless card, vPro®;*
- Intel® Wi-Fi 7 BE200 and Bluetooth® 5.4 wireless card, non-vPro® **
- Intel® WI-FI 6E AX211 WI-FI 6E and Bluetooth® 5.3 wireless card, non-vPro®***

Notes:

NIC Fundamentals:

By default, the HP BIOS set the HUB WOLsetting to disabled state, which will not allow wake signal from the USB bus to initiate a wake event. On Engage One Plus, the Embedded Lan Controller is enabled by default and is what HP recommend using as the primary nic for WOLcapability as seen in the BIOS F10 menu If customer has a reason to use the HUB NICand wants to wake the system from that NIC. They must enable wake events for the HUB to get the functionality.

*Wireless access point and Internet service required and not included. Availability of public wireless access points limited. The specifications for the 802.11ax WLAN are draft specifications and are not final. If the final specifications differ from the draft specifications, it may affect the ability of the PCto communicate with 802.11ax WLAN devices. Wi-Fi 6 requires a wireless router, sold separately, that supports 802.11ax (Wi-Fi 6). Only available in countries where 802.11ax is supported.

** Wi-Fi 6 is backwards compatible with prior 802.11 specs.

You require a wireless access point and internet service. Limited public wireless access points are available. The specifications for the 802.11 WLAN are draft specifications and are not final. If the final specifications differ from the draft specifications, it might affect the ability of the notebook to communicate with other 802.11 WLAN devices.

Intel® i219LM 10/100/1000 Integrated NIC	
Connector	RJ-45
System Interface	PCI (Intel® proprietary) + SMBus
Data rates supported	10 Mbit/s operation (10BASE-T; IEEE 802.3i; IEEE 802.3 clauses 13-14) 100 Mbit/s operation (100BASE-TX; IEEE 802.3u; IEEE 802.3 clauses 21-30) 1000 Mbit/s operation (1000BASE-T; IEEE 802.3ab; IEEE 8023 clauses 40) Auto-Negotiation (Automatic Speed Selection) Full Duplex Operation at all Speeds, Half Duplex operation at 10 and 100 Mbit/s
IEEE Compliance	IEEE 802.1p QoS (Quality of Service) Support IEEE 802.1q VLAN support IEEE 802.3x Flow Control (IEEE 802.3 clauses 31-32; configurable) IEEE 802.3az EEE (Energy Efficient Ethernet)
Performance	TCP/IP/UDP Checksum Offload (configurable) Protocol Offload (ARP & NS) Large send offload and Giant send offload Receiving Side Scaling(Hash Mode Only) Jumbo Frame 9K

Technical Specifications – Networking and Communications

Power consumption	Cable Disconnetion: 25mW 100Mbps Full Run: 450mW 1000bp Full Run: 1000mW WoL Enable(S3/S4/S5): 50mW WoL Disable(S3/S4/S5): 25mW
Power Management	ACPI compliant – multiple power modes Situation-sensitive features reduce power consumption Advanced link down power saving for reducing link down power consumption
Management Interface	Auto MDI/MDIX Crossover cable detection
IT Manageability	Wake-on-LAN from modem standby or sleep state (Magic Packet and Microsoft Wake-Up Frame); Wake-on-LAN from off (Magic Packet only) PXE 2.1 Remote Boot Statistics Gathering (SNMP MIB II, Ethernet-like MIB, Ethernet MIB (802.3x, clause 30)) Comprehensive diagnostic and configuration software suite Virtual Cable Doctor for Ethernet cable status
Security & Manageability	Intel® vPro® support with appropriate Intel® chipset components

Intel Wi-Fi 6 AX201 + BT5 (802.11ax 2x2, vPro, supporting gigabit file transfer speeds)non-vPro	
Wireless LAN Standards	IEEE 802.11a IEEE 802.11b IEEE 802.11g IEEE 802.11n IEEE 802.11ac IEEE 802.11ax IEEE 802.11d IEEE 802.11e IEEE 802.11h IEEE 802.11i IEEE 802.11k IEEE 802.11r IEEE 802.11v
Interoperability	Features Wi-Fi 6 technology
Frequency Band	802.11b/g/n/ax • 2.402 – 2.482 GHz 802.11[a]/n/ac/ax • 4.9 – 4.95 GHz (Japan) • 5.15 – 5.25 GHz • 5.25 – 5.35 GHz • 5.47 – 5.725 GHz • 5.825 – 5.850 GHz
Data Rates	• 802.11b: 1, 2, 5.5, 11 Mbps • 802.11g: 6, 9, 12, 18, 24, 36, 48, 54 Mbps • 802.11a: 6, 9, 12, 18, 24, 36, 48, 54 Mbps • 802.11n: MCS 0 ~ MCS 15, (20MHz, and 40MHz) • 802.11ac : MCS0 ~ MCS9, (1SS, and 2SS) (20MHz, 40MHz, ,80MHz & 160MHz) • 802.11ax : MCS0 ~ MCS11, (1SS and 2SS) (20MHz, 40MHz, ,80MHz & 160MHz)

Technical Specifications – Networking and Communications

Modulation	Direct Sequence Spread Spectrum OFDM, BPSK, QPSK, CCK, 16-QAM, 64-QAM, 256-QAM, 1024QAM	
Security[3]	• IEEE compliant 64 / 128 bit WEP encryption for a/b/g mode only • AES-CCMP: 128 bit in hardware • 802.1x authentication • WPA, WPA2: 802.1x. WPA-PSK, WPA2-PSK, TKIP, and AES. • WPA2 certification • IEEE 802.11i • WAPI	
Network Architecture Models	Ad-hoc (Peer to Peer) Infrastructure (Access Point Required)	
Roaming	IEEE 802.11 compliant roaming between access points	
Output Power[2]	• 802.11b : +18.5dBm minimum • 802.11g : +17.5dBm minimum • 802.11ª : +18.5dBm minimum • 802.11n HT20(2.4GHz) : +15.5dBm minimum • 802.11n HT40(2.4GHz) : +14.5dBm minimum • 802.11n HT20(5GHz) : +15.5dBm minimum • 802.11n HT40(5GHz) : +14.5dBm minimum • 802.11ac VHT80(5GHz) : +11.5dBm minimum • 802.11ac VHT160(5GHz): +11.5dBm minimum	
Power Consumption	• Transmit mode: 2.0 W • Receive mode: 1.6 W • Idle mode (PSP) 180 mW (WLAN Associated) • Idle mode: 50 mW (WLAN unassociated) • Connected Standby: 10mW • Radio disabled: 8 mW	
Power Management	ACPI and PCI Express compliant power management 802.11 compliant power saving mode	
Receiver Sensitivity[3]	•802.11b, 1Mbps : -93.5dBm 31 maximum •802.11b, 11Mbps : -84dBm 31 maximum • 802.11a/g, 6Mbps : -86dBm maximum • 802.11a/g, 54Mbps : -72dBm maximum • 802.11n, MCS07 : -67dBm maximum • 802.11n, MCS15 : -64dBm maximum • 802.11ac, MCS0 : -84dBm maximum • 802.11ac, MCS9 : -59dBm maximum •802.11ax, MCS11(HT40): -59dBm maximum •802.11ax, MCS11(VHT160): -58.5dBm maximum	
Antenna type	High efficiency antenna with spatial diversity, mounted in the display enclosure Two embedded dual band 2.4/5 GHz antennas are provided to the card to support WLAN MIMO communications and Bluetooth® communications	
Form Factor	PCI-Express M.2 MiniCard with CNVi Interface	
Dimensions	1. Type 2230 : 2.3 x 22.0 x 30.0 mm 2. Type 1216: 1.67 x 12.0 x 16.0 mm	
Weight	1. Type 2230 : 2.8g 2. Type 126: 1.3g	
Operating Voltage	3.3v +/- 9%	
Temperature	Operating Non-operating	14° to 158° F (–10° to 70° C) –40° to 176° F (–40° to 80° C)

Technical Specifications – Networking and Communications

Humidity	Operating Non-operating	10% to 90% (non-condensing) 5% to 95% (non-condensing)
Altitude	Operating Non-operating	0 to 10,000 ft (3,048 m) 0 to 50,000 ft (15,240 m)
LED Activity	LED Amber – Radio OFF; LED White – Radio ON	
HP Integrated Module with Bluetooth® 4.0/4.1/4.2/5.0/5.1 Wireless Technology		
Bluetooth® Specification	4.0/4.1/4.2/5.0/5.1 Compliant	
Frequency Band	2402 to 2480 MHz	
Number of Available Channels	Legacy : 0~79 (1 MHz/CH) BLE : 0~39 (2 MHz/CH)	
Data Rates and Throughput	Legacy : 3 Mbps data rate; throughput up to 2.17 Mbps	
	BLE : 1 Mbps data rate; throughput up to 0.2 Mbps	
	Legacy : Synchronous Connection Oriented links up to 3, 64 kbps, voice channels.	
	Legacy : Asynchronous Connection Less links 2178.1 kbps/177.1 kbps asymmetric (3-DH5) or 864 kbps symmetric (3-EV5)	
Transmit Power	The Bluetooth® component shall operate as a Class II Bluetooth®device with a maximum transmit power of +9.5 dBm for BR and EDR.	
Power Consumption	Peak (Tx) 330 mW Peak (Rx) 230 mW Selective Suspend 17 mW	
Bluetooth® Software Supported Link Topology	Microsoft Windows Bluetooth® Software	
Power Management	Microsoft Windows ACPI, and USB Bus Support	
Certifications	FCC (47 CFR) Part 15C, Section 15.247 & 15.249	
Bluetooth® Profiles Supported	BT4.1-ESR 5/ 6/ 7 Compliance LE Link Layer Ping LE Dual Mode LE Link Layer LE Low Duty Cycle Directed Advertising LE L2CAP Connection Oriented Channels Train Nudging &Interlaced Scan BT4.2 ESR08 Compliance LE Secure Connection- Basic/ Full LE Privacy 1.2 –Link Layer Privacy LE Privacy 1.2 –Extended Scanner Filter Policies LE Data Packet Length Extension FAXProfile (FAX) Basic Imaging Profile (BIP)2 Headset Profile (HSP) Hands Free Profile (HFP) Advanced Audio Distribution Profile (A2DP)	

Technical Specifications – Networking and Communications

Bluetooth® Profiles Supported	BT4.1-ESR 5/6/7 Compliance LE Link Layer Ping LE Dual Mode LE Link Layer LE Low Duty Cycle Directed Advertising LE L2CAP Connection Oriented Channels Train Nudging & Interlaced Scan BT4.2 ESR08 Compliance LE Secure Connection- Basic/Full LE Privacy 1.2 –Link Layer Privacy LE Privacy 1.2 –Extended Scanner Filter Policies LE Data Packet Length Extension FAX Profile (FAX) Basic Imaging Profile (BIP)2 Headset Profile (HSP) Hands Free Profile (HFP) Advanced Audio Distribution Profile (A2DP)

Realtek RTL8822CE 802.11ac 2x2 Wi-Fi + BT5	
Wireless LAN Standards	IEEE 802.11a IEEE 802.11b IEEE 802.11g IEEE 802.11n IEEE 802.11ac IEEE 802.11d IEEE 802.11e IEEE 802.11h IEEE 802.11i IEEE 802.11k IEEE 802.11r IEEE 802.11v
Interoperability	Wi-Fi®certified
Frequency Band	802.11b/g/n • 2.402 – 2.482 GHz 802.11ª/n/ac
	• 4.9 – 4.95 GHz (Japan) • 5.15 – 5.25 GHz • 5.25 – 5.35 GHz • 5.47 – 5.725 GHz • 5.825 – 5.850 GHz
Data Rates	• 802.11b: 1, 2, 5.5, 11 Mbps • 802.11g: 6, 9, 12, 18, 24, 36, 48, 54 Mbps • 802.11a: 6, 9, 12, 18, 24, 36, 48, 54 Mbps • 802.11n: MCS 0 ~ MCS 15, (20MHz, and 40MHz) • 802.11ac : MCS0 ~ MCS9, (1SS, and 2SS) (20MHz, 40MHz, & 80MHz)
Modulation	Direct Sequence Spread Spectrum BPSK, QPSK, CCK, 16-QAM, 64-QAM, 256-QAM
Security3	• IEEE and WiFi compliant 64 / 128 bit WEP encryption for a/ b/ g mode only • AES-CCMP: 128 bit in hardware • 802.1x authentication • WPA, WPA2: 802.1x. WPA-PSK, WPA2-PSK, TKIP, and AES. • WPA2 certification • IEEE 802.11i • WAPI
Network Architecture Models	Ad-hoc (Peer to Peer)

Technical Specifications – Networking and Communications

	Infrastructure (Access Point Required)
Roaming	IEEE 802.11 compliant roaming between access points
Output Power2	• 802.11b : +18.5dBm minimum • 802.11g : +17.5dBm minimum • 802.11ª : +18.5dBm minimum • 802.11n HT20(2.4GHz) : +15.5dBm minimum • 802.11n HT40(2.4GHz) : +14.5dBm minimum • 802.11n HT20(5GHz) : +15.5dBm minimum • 802.11n HT40(5GHz) : +14.5dBm minimum • 802.11ac VHT80(5GHz) : +11.5dBm 35 maximum • 802.11ac VHT160(5GHz) : +11.5dBm minimum
Intel Wi-Fi 6 AX201 + BT5 (802.11ax 2x2, non-vPro, supporting gigabit file transfer speeds) non-vPro	
Wireless LAN Standards	IEEE802.11a IEEE802.11b IEEE802.11g IEEE802.11n IEEE802.11ac IEEE802.11ax IEEE802.11d IEEE802.11e IEEE802.11h IEEE802.11i IEEE802.11k IEEE802.11r IEEE802.11v
Interoperability	Features Wi-Fi 6 technology
Frequency Band	802.11b/g/n/ax • 2.402 – 2.482 GHz 802.11ª/n/ac/ax
	• 4.9 – 4.95 GHz (Japan) • 5.15 – 5.25 GHz • 5.25 – 5.35 GHz • 5.47 – 5.725 GHz 5.825 – 5.850 GHz
Data Rates	• 802.11b: 1, 2, 5.5, 11 Mbps • 802.11g: 6, 9, 12, 18, 24, 36, 48, 54 Mbps • 802.11a: 6, 9, 12, 18, 24, 36, 48, 54 Mbps • 802.11n: MCS0 ~MCS15, (20MHz, and 40MHz) • 802.11ac: MCS0 ~MCS9, (1SS,and 2SS)(20MHz, 40MHz, ,80MHz &160MHz) 802.11ax: MCS0 ~MCS11, (1SSand 2SS) (20MHz, 40MHz, ,80MHz &160MHz)
Modulation	Direct Sequence Spread Spectrum OFDM,BPSK,QPSK,CCK, 16-QAM, 64-QAM, 256-QAM, 1024QAM
Security3	• IEEEcompliant 64 / 128 bit WEPencryption for a/b/g mode only • AES-CCMP: 128 bit in hardware • 802.1x authentication • WPA,WPA2: 802.1x. WPA-PSK,WPA2-PSK,TKIP,and AES. • WPA2certification • IEEE802.11i • WAPI
Network Architecture Models	Ad-hoc (Peer to Peer) Infrastructure (Access Point Required)
Roaming	IEEE802.11 compliant roaming between access points

Technical Specifications – Networking and Communications

Output Power2	• 802.11b : +18.5dBm minimum • 802.11g : +17.5dBm minimum • 802.11ª : +18.5dBm minimum • 802.11n HT20(2.4GHz) : +15.5dBm minimum • 802.11n HT40(2.4GHz) : +14.5dBm minimum • 802.11n HT20(5GHz) : +15.5dBm minimum • 802.11n HT40(5GHz) : +14.5dBm minimum • 802.11ac VHT80(5GHz) : +11.5dBm minimum • 802.11ac VHT160(5GHz): +11.5dBm minimum • 802.11ax HT40(2.4GHz) : +10dBm minimum • 802.11ax VHT160(5GHz): +10dBm minimum	
Power Consumption	• Transmit mode 2.0 W • Receive mode 1.6 W • Idle mode (PSP)180 mW(WLAN Associated) • Idle mode 50 mW(WLAN unassociated) • Connected Standby 10mW • Radio disabled 8 mW	
Power Management	ACPIand PCIExpress compliant power management 802.11 compliant power saving mode	
Receiver Sensitivity	• 802.11b, 1Mbps : -93.5dBm 33 maximum • 802.11b, 11Mbps : -84dBm 33 maximum • 802.11a/g, 6Mbps : -86dBm maximum • 802.11a/g, 54Mbps : -72dBm maximum • 802.11n, MCS07 : -67dBm maximum • 802.11n, MCS15 : -64dBm maximum • 802.11ac, MCS0 : -84dBm maximum • 802.11ac, MCS9 : -59dBm maximum • 802.11ax, MCS11(HT40):-59dBm maximum • 802.11ax, MCS11(VHT160): -58.5dBm maximum	
Antenna type	High efficiency antenna with spatial diversity, mounted in the display enclosure	
	Two embedded dual band 2.4/5 GHz antennas are provided to the card to support WLAN MIMOcommunications and Bluetooth® communications	
Form Factor	PCI-Express M.2 MiniCard with CNVi Interface	
Dimensions	1. Type 2230 : 2.3 x 22.0 x 30.0 mm 2. Type 1216: 1.67 x 12.0 x 16.0 mm	
Weight	1. Type 2230 : 2.8g 2. Type 126: 1.3g	
Operating Voltage	3.3v +/- 9%	
Temperature	Operating Non-operating	14° to 158° F(–10° to 70° C) –40° to 176° F(–40° to 80° C)
Humidity	Operating Non-operating	10% to 90% (non-condensing) 5% to 95% (non-condensing)
Altitude	Operating Non-operating	0 to 10,000 ft (3,048 m) 0 to 50,000 ft (15,240 m)

Technical Specifications – Networking and Communications

LEDActivity	LEDAmber – Radio OFF;LEDOff – Radio ON
HP Integrated Module with Bluetooth® 4.0/ 4.1/ 4.2/ 5.0/ 5.1 Wireless Technology	
Bluetooth® Specification	4.0/4.1/4.2/5.0/5.1 Compliant
Frequency Band	2402 to 2480 MHz
Number of Available Channels	Legacy :0~79 (1 MHz/CH)BLE:0~39 (2 MHz/CH)
Data Rates and Throughput	Legacy : 3 Mbps data rate; throughput up to 2.17 Mbps
	BLE : 1 Mbps data rate; throughput up to 0.2 Mbps
	Legacy : Synchronous Connect ion Oriented links up to 3, 64 kbps, voice channels.
Transmit Power	The Bluetooth® component shall operate as a Class II Bluetooth® device with a maximum transmit power of +9.5 dBm for BRand EDR.
Power Consumption	Peak (Tx) 330 mWPeak (Rx) 230 mW Selective Suspend 17 mW
Bluetooth® Software Supported Link Topology	Microsoft Windows Bluetooth® Software
Power Management	Microsoft Windows ACPI, and USBBus Support
Cert ificat ions	FCC(47 CFR)Part 15C, Section 15.247 &15.249 ETS 300 328, ETS 300 826 Low Voltage Directive IEC60950 UL, CSA, and CEMark
Bluetooth® Profiles Supported	BT4.1-ESR5/6/7 Compliance LELink Layer Ping LEDual Mode LELink Layer LELow Duty Cycle Directed Advertising LEL2CAPConnection Oriented Channels Train Nudging &Interlaced Scan BT4.2 ESR08 Compliance LESecure Connection- Basic/Full LEPrivacy 1.2 –Link Layer Privacy LEPrivacy1.2 –Extended Scanner Filter Policies LEData Packet Length Extension FAXProfile (FAX) Basic Imaging Profile (BIP)2 Headset Profile (HSP) Hands Free Profile (HFP) Advanced Audio Distribution Profile (A2DP)
Realtek RTL8822CE802.11ac 2x2 Wi-Fi + BT5	
Wireless LAN Standards	IEEE802.11a IEEE802.11b IEEE802.11g IEEE802.11n IEEE802.11ac IEEE802.11d IEEE802.11e IEEE802.11h IEEE802.11i IEEE802.11k IEEE802.11r IEEE802.11v
Interoperability	Wi-Fi®certified
Frequency Band	802.11b/g/ n • 2.402 – 2.482 GHz 802.11ª/n/ ac
	• 4.9 – 4.95 GHz (Japan) • 5.15 – 5.25 GHz • 5.25 – 5.35 GHz

Technical Specifications – Networking and Communications

	• 5.47 – 5.725 GHz 5.825 – 5.850 GHz
Data Rates	• 802.11b: 1, 2, 5.5, 11 Mbps • 802.11g: 6, 9, 12, 18, 24, 36, 48, 54 Mbps • 802.11a: 6, 9, 12, 18, 24, 36, 48, 54 Mbps • 802.11n: MCS0 ~MCS15, (20MHz, and 40MHz) 802.11ac: MCS0~MCS9,(1SS,and 2SS)(20MHz,40MHz&80MHz)
Modulation	Direct Sequence Spread Spectrum BPSK,QPSK,CCK, 16-QAM, 64-QAM, 256-QAM
Security3	• IEEEand WiFicompliant 64 / 128 bit WEPencryption for a/b/g mode only • AES-CCMP:128 bit in hardware • 802.1x authentication • WPA,WPA2: 802.1x. WPA-PSK,WPA2-PSK,TKIP,and AES. • WPA2certification • IEEE802.11i • WAPI
Network Architecture Models	Ad-hoc (Peer to Peer) Infrastructure (Access Point Required)
Roaming	IEEE 802.11 compliant roaming between access points
Output Power2	• 802.11b : +18.5dBm minimum • 802.11g : +17.5dBm minimum • 802.11ª : +18.5dBm minimum • 802.11n HT20(2.4GHz) : +15.5dBm minimum • 802.11n HT40(2.4GHz) : +14.5dBm minimum • 802.11n HT20(5GHz) : +15.5dBm minimum • 802.11n HT40(5GHz) : +14.5dBm minimum • 802.11ac VHT80(5GHz) : +11.5dBm 35 maximum • 802.11ac VHT160(5GHz): +11.5dBm minimum
Power Consumption	• Transmit mode :2.0 W • Receive mode :1.6 W • Idle mode (PSP)180 mW(WLAN Associated) • Idle mode :50 mW(WLAN unassociated) • Connected Standby/ Modern Standby: 10mW • Radio disabled: 8 mW
Power Management	ACPIand PCIExpress compliant power management 802.11 compliant power saving mode
Receiver Sensitivity	802.11b, 1Mbps : -93.5dBm 35 maximum 802.11b, 11Mbps : -84dBm 35 maximum 802.11ª/g, 6Mbps : -86dBm 35 maximum 802.11ª/g, 54Mbps : -72dBm 35 maximum 802.11n, MCS07 : -67dBm 35 maximum 802.11n, MCS15 : -64dBm 35 maximum 802.11ac, MCS0 : -84dBm 35 maximum • 802.11ac, MCS9 : -59dBm maximum
Antenna type	High efficiency antenna with spatial diversity, mounted in the display enclosure Two embedded dual band 2.4/5 GHz antennas are provided to the card to support WLAN MIMO communications and Bluetooth® communications
Form Factor	PCI-Express M.2 MiniCard with CNVi Interface
Dimensions	3. Type 2230 : 2.3 x 22.0 x 30.0 mm 4. Type 1216: 1.67 x 12.0 x 16.0 mm

Technical Specifications – Networking and Communications

Weight	3. Type 2230 : 2.8g 4. Type 126: 1.3g	
Operating Voltage	3.3v +/- 9%	
Temperature	Operating Non-operating	14° to 158° F(–10° to 70° C) –40° to 176° F(–40° to 80° C)
Humidity	Operating Non-operating	10% to 90% (non-condensing) 5% to 95% (non-condensing)
Altitude	Operating Non-operating	0 to 10,000 ft (3,048 m) 0 to 50,000 ft (15,240 m)
LEDActivity	LEDAmber – Radio OFF;LEDOff – Radio ON	
HP Integrated Module with Bluetooth® 4.0/ 4.1/ 4.2/ 5.0 Wireless Technology		
Bluetooth® Specification	4.0/4.1/4.2/5.0 Compliant	
Frequency Band	2402 to 2480 MHz	
Number of Available Channels	Legacy : 0~79 (1 MHz/CH)BLE:0~39 (2 MHz/CH)	
Data Rates and Throughput	Legacy : 3 Mbps data rate; throughput up to 2.17 Mbps	
	BLE : 1 Mbps data rate; throughput up to 0.2 Mbps	
	Legacy : Synchronous Connect ion Oriented links up to 3, 64 kbps, voice channels Legacy : Asynchronous Connection Less links 2178.1 kbps/ 177.1 kbps asymmetric (3-DH5) or 864 kbps symmetric (3-EV5)	
Transmit Power	The Bluetooth® component shall operate as a Class II Bluetooth® device with a maximum transmit power of +4 dBm for BRand EDR.	
Power Consumption	Peak (Tx) 330 mWPeak (Rx) 230 mW Selective Suspend 17 mW	
Bluetooth® Software Supported Link Topology	Microsoft Windows Bluetooth® Software	
Power Management	Microsoft Windows ACPI, and USBBus Support	
Certifications	FCC(47 CFR)Part 15C, Section 15.247 &15.249	
Power Management Certifications	ETS300 328, ETS300 826	
	Low Voltage Directive IEC950 UL,CSA,and CEMark	
Bluetooth® Profiles Supported	BT4.1-ESR5/6/7 Compliance LELink Layer Ping LEDual Mode LELink Layer LELow Duty Cycle Directed Advertising LEL2CAPConnection Oriented Channels Train Nudging &Interlaced Scan BT4.2 ESR08 Compliance LESecure Connection- Basic/Full LEPrivacy 1.2 –Link Layer Privacy LE Privacy 1.2 –Extended Scanner Filter Policies LEData Packet Length Extension FAXProfile (FAX) Basic Imaging Profile (BIP)2 Headset Profile (HSP) Hands Free Profile (HFP) Advanced Audio Distribution Profile (A2DP)	

Intel® Wi-Fi 7 BE200 and Bluetooth® 5.4 wireless card, vPro® and NonvPro Module

Technical Specifications – Networking and Communications

The Intel® Wi-Fi 7 BE200 adapter is designed to support the upcoming IEEE 802.11be standard – Wi-Fi 71 technology and the Wi-Fi Alliance Wi-Fi 7 certification. Aligned with the upcoming IEEE 802.11be standard, the Intel® Wi-Fi 7 BE200 module supports these key features: 4096QAM and 320MHz channels resulting in 2.4X higher peak data rates4, Multi-link Operation (MLO - eMLSR), Multi-resource unit (Multi-RU) and Puncturing.

Intel® Wi-Fi 7 BE200 Module Technical Specifications	
GENERAL	
Dimensions (H x W x D)	M.2 2230: 22mm x 30mm x 2.42mm (max) M.2 1216: 12mm x 16mm x 1.7 (+-0.1) mm
Weight	M.2 2230: 3.07+/-0.15g M.2 1216: 0.75+/-0.04g
Radio ON/OFF Control	Supported
Connector Interface	M.2: PCIe*, USB
Operating Temperature (Ambient)	0°C to +50°C
Humidity Non-Operating	50% to 90% RH non-condensing (at temperatures of 25°C to 35°C)
Operating Systems	Microsoft* Windows 11*, Microsoft* Windows 10*, Linux*
Wi-Fi Alliance[6]	Wi-Fi 7 Technology support, Wi-Fi CERTIFIED* 6 with Wi-Fi 6E, Wi-Fi CERTIFIED* a/b/g/n/ac, WMM*, WMM*-Power Save, WPA3*, PMF*, Wi-Fi Direct*, Wi-Fi Agile Multiband*, Wi-Fi Location R2 HW readiness[7]
IEEE WLAN Standard	IEEE 802.11-2020 and select amendments (selected feature coverage) IEEE 802.11a, b, d, e, g, h, i, k, n, r, u, v, w, ac, ax, be; Fine Timing Measurement based on 802.11-2016, 802.11az HW readiness
Bluetooth®	Bluetooth® 5.4 (Ant. 1)
SECURITY FEATURES	
Security Methods	WPA3* personal and enterprise including WPA2* transition mode
Authentication Protocols	802.1X EAP-TLS, EAP-TTLS/MSCHAPv2, PEAPv0 -MSCHAPv2 (EAP-SIM, EAP-AKA, EAP-AKA')
Encryption	128-bit AES-CCMP, 256-bit AES-GCMP
COMPLIANCE	
Regulatory	For a list of country approvals, please contact your local Intel representatives.
US Government	FIPS[9]140-3
Product Safety	UL, C-UL, CB (62368-1)

Product Name	Model Number	Version
Intel® Wi-Fi 7 BE200	BE200NGW BE200D2W	Wi-Fi 7, 2x2, Bluetooth® 5.4, M.2 2230 Wi-Fi 7, 2x2, Bluetooth® 5.4, M.2 1216

[1] Wi-Fi 7 (802.11be) WFA certification is not yet available. Intel® Wi-Fi 7 BE200 module will be delivered as a pre-certified solution.
[2] Name and features might change based on Bluetooth® SIG direction
[3] "5 Gbps Wi-Fi 7 2x2 client speed" - is based on the current draft of the 802.11be specification, which specifies the theoretical maximum data rate for a 2x2 device that supports 320 MHz channels in the 6GHz band, with a 4096 QAM modulation is 5.76 Gbps. Based on an industry-standard efficiency assumption, the resulting estimated maximum over-the-air 2x2 client UDP throughput speed would be 5 Gbps
[4] "2.4X higher peak data rates" Intel® Wi-Fi, 7 BE200 claims, are based on the comparison of the expected maximum theoretical data rates for similarly configured single radio Wi-Fi 7 (802.11be) and standard Wi-Fi 6 (802.11ax) Wi-Fi solutions as documented in current IEEE 802.11be spec and IEEE
802.11 wireless standard specifications, and require the use of similarly configured 802.11be wireless network routers.

Technical Specifications – Networking and Communications

[5] Intel® vPro® Technology is sophisticated and requires setup and activation. Availability of features and results will depend upon the setup and configuration of your hardware, software, and IT environment. To learn more, visit: http://www.intel.com/technology/vpro.
[6] Support of Wi-Fi Alliance certifications is OS-dependent.
[7] IEEE 802.11az hardware readiness per expected Wi-Fi Location R2 feature support and based on draft 2.1 of the IEEE802.11az amendment and is subject to change.
[8] Some security solutions may not be supported by your device operating system and/or by your device manufacturer or may require additional hardware (e.g., UICC – SIM card). Check with your device manufacturer for details on availability.
[9] Pre-certified
The Bluetooth® word mark and logos are registered trademarks owned by the Bluetooth® SIG, Inc., and any use of such marks by Intel Corporation is under license.
Tests document the performance of components on a particular test, in specific systems. Differences in hardware, software, or configuration will affect actual performance. Consult other sources of information to evaluate performance as you consider your purchase. For more complete information about performance and benchmark results, visit http://www.intel.com/benchmarks.
Estimated results were obtained prior to implementation of recent software patches and firmware updates intended to address exploits referred to as "Spectre" and "Meltdown". Implementation of these updates may make these results inapplicable to your device or system.
No license (express or implied, by estoppel or otherwise) to any intellectual property rights is granted by this document.
Intel disclaims all express and implied warranties, including without limitation, the implied warranties of merchantability, fitness for a particular purpose, and non-infringement, as well as any warranty arising from course of performance, course of dealing, or usage in trade. Intel may make changes to specifications and product descriptions at any time, without notice. For the most current product information, please visit **http://www.intel.com/wireless**.
Cost reduction scenarios described are intended as examples of how a given Intel-based product, in the specified circumstances and configurations, may affect future costs and provide cost savings. Circumstances will vary. Intel does not guarantee any costs or cost reduction.
This device has not been authorized as required by the rules of the Federal Communications Commission. This device is not, and may not be, offered for sale or lease, or sold or leased, until authorization is obtained.
Intel, the Intel logo, are trademarks or registered trademarks of Intel Corporation or its subsidiaries in the U.S. and/or other countries.
* Other names and brands may be claimed as the property of others.
2024 Copyright © Intel Corporation. All rights reserved.

NFC NXP NPC300

Dimensions (L x W x H)	17 x 10 x 2.0 mm
Chipset	NPC300
System interface	I2C
NFC RF standards	ISO/IEC 14443 A ISO/IEC 14443 B ISO/IEC 15693 ISO/IEC 18092 ECMA-340 NFCIP-1 Target and Initiator ECMA-320 NFCIP-2
NFC Forum Support	Tag Type 1, Type 2, Type3 and Type 4, NFCIP-1 and NFCIP-2
Reader (PCD-VCD) Mode(1)	ISO/IEC 14443 A ISO/IEC 14443 B ISO/IEC 15693 MIFARE 1K MIFARE 4K MIFARE DESFire FeliCa Jewel and Topaz cards
Card Emulation (PICC-VICC) Mode(1)	ISO/IEC 14443 A ISO/IEC 14443 B and B' MIFARE FeliCa
Frequency	13.56 MHz
NFC Modes Supported	Reader/Writer, Peer-to-Peer
Raw RF Data Rates	106, 212, 424, 848 kbps

Technical Specifications – Networking and Communications

Operating temperature	0°C to 70°C		
Storage temperature	-20°C to 125°C		
Humidity	10-90% operating 5-95% non-operating		
Supply Operating voltage	4.35 to 5.25 Volts		
I/O Voltage	1.8V or 3.3V		
Power Consumption	**Booster enable, VCC_BOOST = 5V) Mode Power Consumption, Typical**	VBAT= 3.3V,	
		Polling	7.3 mA
		Detected Test Tag Type 1	Total 283.8 mA Net Module 236.8 mA
		Detected Test Tag Type 2	Total 288.8 mA Net Module 241.8 mA
		Detected Test Tag Type 3	Total 287.7 mA Net Module 240.7 mA
		Detected Test Tag Type 4	Total 282.3 mA Net Module 235.3 mA
Antenna	Antenna connector, 0.5mm pitch, 7 connector FPC. Antenna matching is external to module.		

High-Definition Audio

Engage One System Audio (Realtek ALC3247-CG)

Type	Integrated
HD Stereo Codec	High-Definition Audio codec
Internal Speaker Amplifier	4-channel DAC, 4-channel ADC, and an integrated stereo Class-D Speaker Amplifier
Sampling	Sampling frequency=48kHz
Analog Audio	Yes, Audio Jack support CTIA type
# of Channels on line-out	Stereo (Left & Right channels)
Internal speaker	Yes
Microphone	Yes, stereo digital microphone input with Realtek proprietary Acoustic Echo Cancellation (AEC), Beam Forming (BF), and Noise Suppression (NS) technology, significantly improving voice quality for PC VoIP applications
Maximum Power Output	2W per channel at 5V power supply
Headphone	yes

Technical Specifications – Integrated Camera

1.2 Basic Specification

Camera	5MP+IR camera
Sensor	RGB : 1/4.7” 5M CMOS (OV05C) IR : 1/10.5” 400x400 CMOS (OV6211)
Effective Pixel	RGB : 2880x1800 IR : 400x400
Output Image Size	RGB : Up to 2880x1800 IR : Up to 400x400
Output Format	YUY2, MJPEG
Frame Rate	RGB : 30fps @ MJPG 5M IR : 30fps @Y8 400x400
Lens Structure	RGB : F/2.0, 4P IR : F/2.0, 3P
Outside Dimension	96±0.2 x 5±0.1 x 3.38±0.15 (unit: mm) (Including Lens + PCB + adhesive tape)
PCB thickness	0.3±0.08mm
Interface	USB 2.0
LED Color	White

Technical Specifications – Integrated Camera

RGB: HP 5MP Camera

IR: HP IR Camera

Features

- ➢ Automatic image control
  - ✓ Automatic / Manually Exposure Control
  - ✓ Automatic / Manually White Balance Control
  - ✓ Automatic Gain Control
  - ✓ Face AE
  - ✓ Temporal Noise Reduction
  - ✓ High Dynamic Range
  - ✓ Human Presence Detection
  - ✓ Low Light Compensation
  - ✓ Power Line Flicker Compensation (default@ 60Hz)
  - ✓ Gain
- ➢ Resolution Support for Still/Motion Image
- ➢ Image Quality Control (Adjust Manually)
  - ✓ Brightness
  - ✓ Contrast
  - ✓ Hue
  - ✓ Saturation
  - ✓ Sharpness
  - ✓ Gamma
  - ✓ Backlight Compensation

POWER

Power Supply	280Watt Smart PFC Standard Barrel 7.4mm Straight 1.8m C14 SR-S; 89% efficiency (advance hub) 230Watt Smart PFC Slim Barrel 7.4mm Right Angle ; 89% efficiency (Column hub & VESA hub) 150 Watt Smart PFC Slim Barrel 7.4mm Straight , 89% efficiency (hubless)
Operating Voltage Range	90V~265VAC
Rated Voltage Range	100V~240AC
Rated Line Frequency	50~60HZ
Operating Line Frequency Range	47~63HZ
Rated Input Current	<2.4A RMS/280W, <3.52A/230W
Power Supply Fan	N/A
ENERGY STAR® Compliant	ENERGY STAR® certified configurations available and EPEAT® registered *
Power Cord Length	1.8m

NOTE: Power supply meets ENERGY STAR® compliance in conjunction with a select range of processors and modules.
*Energy Star in under testing & in process of certification at the time this document is written

WEIGHTS & DIMENSIONS

NOTE: Weight and dimensions below do not include MSR, Biometric Reader, Webcam, or CFD.

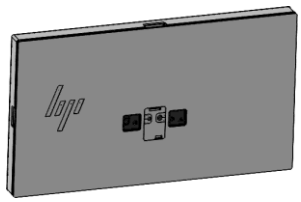



Head Unit-15.6"		
	Metric	US
Head Unit-15.6" Dimensions (Landscape)		
Height [mm/in]	26.4	1.0
Width [mm/in]	397.6	15.7
Depth [mm/in]	241.0	9.5
Volume (Liters/cubic inches)	2.5	154.35
Head Unit-15.6" Dimensions (Portrait)		
Height [mm/in]	26.4	1.0
Width [mm/in]	397.6	15.7

Technical Specifications – Power

Depth [mm/in]	241.0	9.5
Volume (Liters/cubic inches)	2.5	154.35
Head Unit-15.6" Weight (Landscape)		
[kg/lb]	3.37	7.4
Head Unit-15.6" Weight (Portrait)		
[kg/lb]	3.35	7.4

Technical Specifications – Measurement

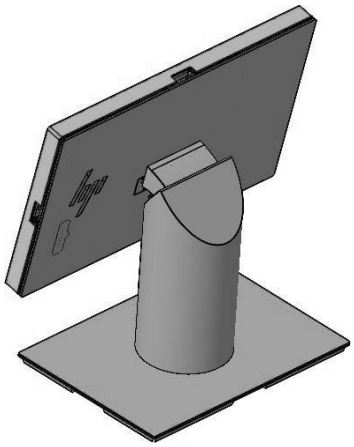

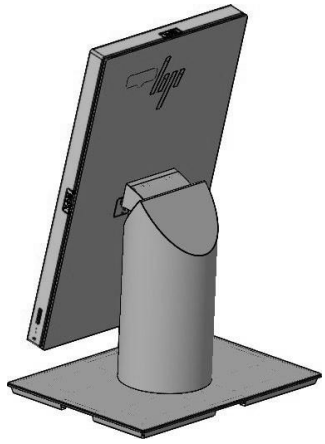

Head Unit-15.6"		
	Metric	US
Landscape dimensions (when working angle is 12 degree)		
Height [mm/in]	365.8	14.4
Width [mm/in]	391.6	15.4
Depth [mm/in]	220.0	8.7
Volume (Litres/cubic inches)	31.5	1923.13
Portrait dimensions (when working angle is 12 degree)		
Height [mm/in]	439.4	17.3
Width [mm/in]	305.0	12.0
Depth [mm/in]	220.0	8.7
Volume (Liters/cubic inches)	29.5	1799.21
Head Unit-15.6" Weight (Landscape) + Gordo Stand		
[kg/lb]	6.70	14.8
Head Unit-15.6" Weight (Portrait)+ Gordo Stand		
[kg/lb]	6.70	14.8

Technical Specifications – Measurement

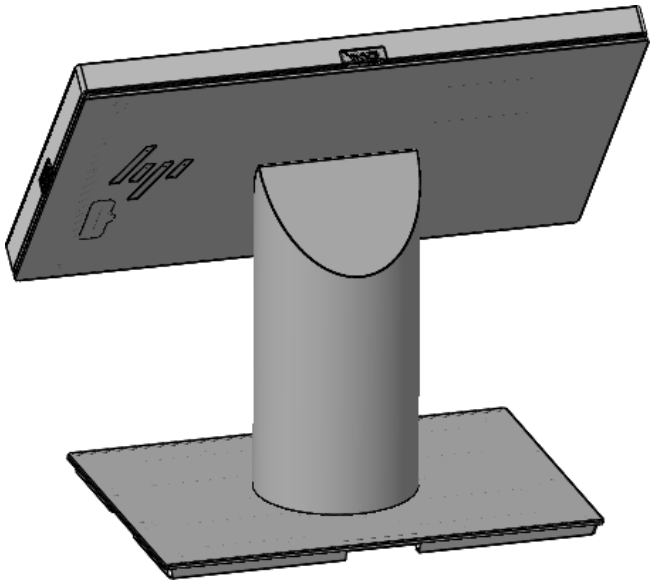

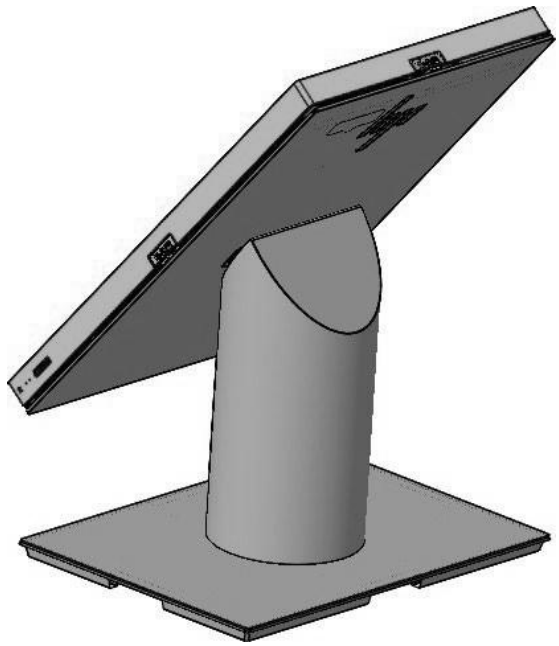

Head Unit-15.6"		
	Metric	US
Landscape dimensions (when working angle is 40~140 degree)		
Height [mm/in]	346.3	13.6
Width [mm/in]	391.6	15.4
Depth [mm/in]	220.0	8.7
Volume (Liters/cubic inches)	29.8	1820.61
Portrait dimensions (when working angle is 40~140 degree)		
Height [mm/in]	404.0	15.9
Width [mm/in]	305.0	12.0
Depth [mm/in]	271.8	10.7
Volume (Liters/cubic inches)	33.5	2043.76
Head Unit-15.6" Weight (Landscape)+ Gordo Stand		
[kg/lb]	6.70	14.8
Head Unit-15.6" Weight (Portrait)+ Gordo Stand		
[kg/lb]	6.70	14.8

Technical Specifications – Measurement

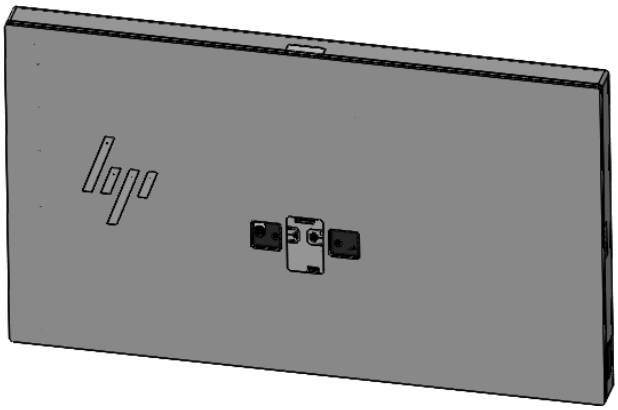

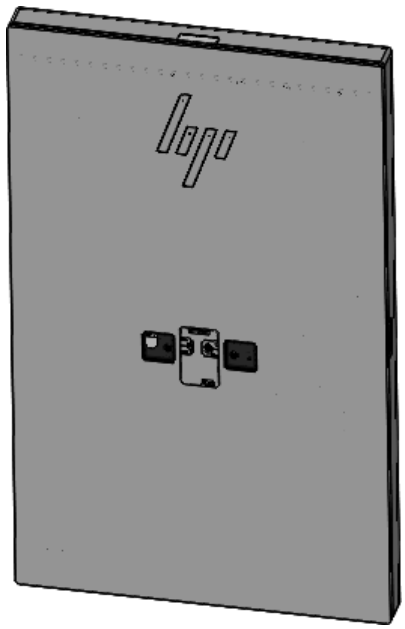

Head Unit-19.5"		
	Metric	US
Head Unit-19.5" Dimensions (Landscape)		
Height [mm/in]	29.4	1.2
Width [mm/in]	494.8	19.5
Depth [mm/in]	292.6	11.5
Volume (Litres/cubic inches)	4.3	259.75
Head Unit-19.5" Dimensions (Portrait)		
Height [mm/in]	29.4	1.2
Width [mm/in]	488.8	19.2
Depth [mm/in]	292.6	11.5
Volume (Litres/cubic inches)	4.2	256.60
Head Unit-19.5" Weight (Landscape)		
[kg/lb]	5.70	12.6
Head Unit-19.5" Weight (Portrait)		
[kg/lb]	5.69	12.5

Technical Specifications – Measurement

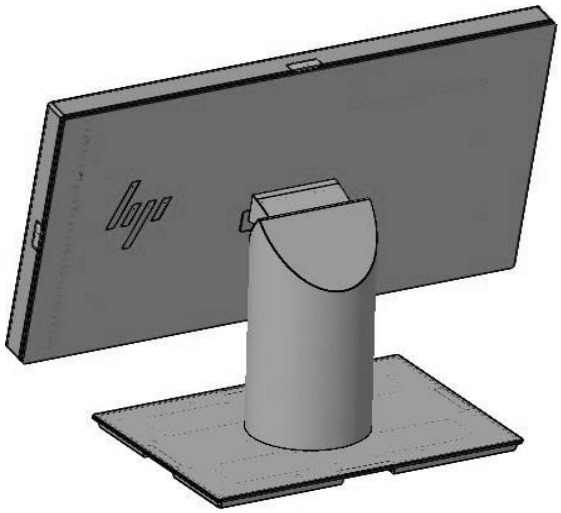

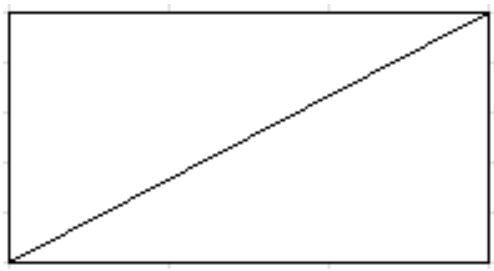

Head Unit-19.5"		
	Metric	US
Landscape dimensions (when working angle is 12 degree)		
Height [mm/in]	391.6	15.4
Width [mm/in]	488.8	19.2
Depth [mm/in]	220.0	8.7
Volume (Litres/cubic inches)	42.1	2569.78
Portrait 19.5” does not support 12 degrees		
Height [mm/in]		
Width [mm/in]		
Depth [mm/in]		
Volume (Litres/cubic inches)		
Head Unit-19.5" Weight (Landscape)		
[kg/lb]	8.80	19.4
Head Unit-19.5" Weight (Portrait)		
[kg/lb]		

Technical Specifications – Measurement



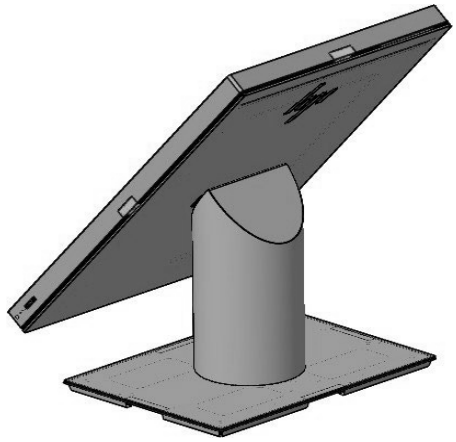

Head Unit-19.5"		
	Metric	US
Landscape dimensions (when working angle is 40~140 degree)		
Height [mm/in]	368.0	14.5
Width [mm/in]	488.8	19.2
Depth [mm/in]	239.5	9.4
Volume (Litres/cubic inches)	43.1	2628.96
portrait dimensions (when working angle is 40~140 degree)		
Height [mm/in]	443.2	17.4
Width [mm/in]	305.0	12.0
Depth [mm/in]	336.5	13.2
Volume (Litres/cubic inches)	45.5	2775.77
Head Unit-19.5" Weight (Landscape)+Gordo Stand		
[kg/lb]	8.80	19.4
Head Unit-19.5" Weight (Portrait)+Gordo Stand		
[kg/lb]	8.80	19.4

Technical Specifications – Measurement

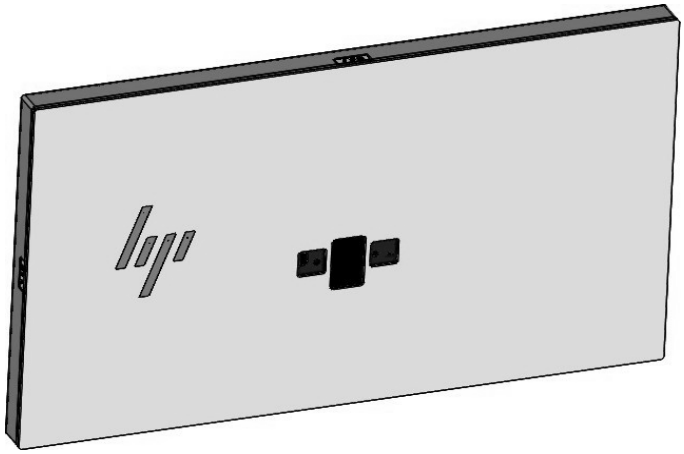

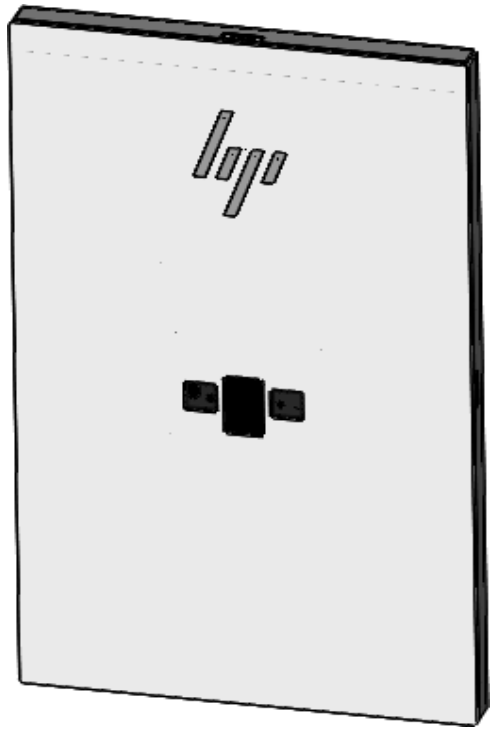

Head Unit-23.8"		
	Metric	US
Head Unit-23.8" Dimensions (Landscape)		
Height [mm/in]	29.4	1.2
Width [mm/in]	576.4	22.7
Depth [mm/in]	339.9	13.4
Volume (Litres/cubic inches)	5.8	351.50
Head Unit-23.8" Dimensions (Portrait)		
Height [mm/in]	29.4	1.2
Width [mm/in]	570.4	22.5
Depth [mm/in]	339.9	13.4
Volume (Litres/cubic inches)	5.7	347.84
Head Unit-23.8" Weight (Landscape)		
[kg/lb]	6.80	15.0
Head Unit-23.8" Weight (Portrait)		

Technical Specifications – Measurement

[kg/lb]	6.79	15.0

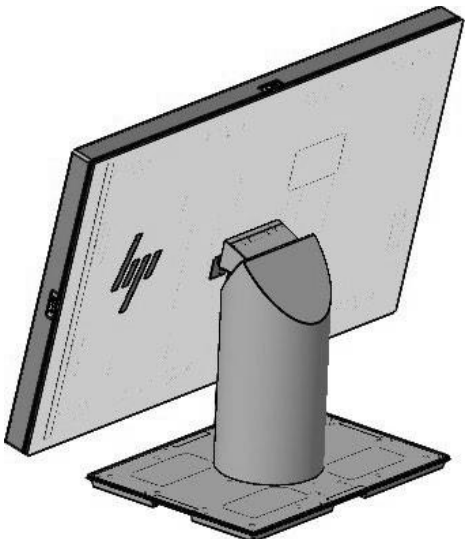

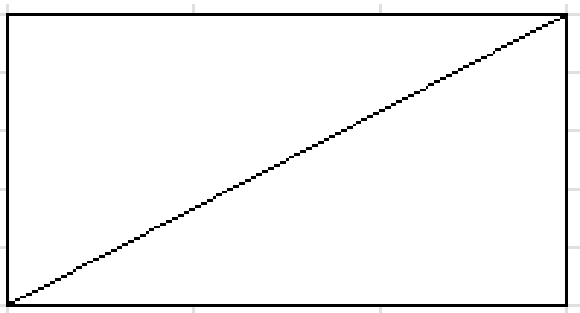

Head Unit-23.8"		
	Metric	US
Landscape dimensions (when working angle is 12 degree)		
Height [mm/in]	414.7	16.3
Width [mm/in]	570.4	22.5
Depth [mm/in]	220.0	8.7
Volume (Litres/cubic inches)	52.0	3175.67
Portrait 23.8” does not support 12 degrees		
Height [mm/in]		
Width [mm/in]		
Depth [mm/in]		
Volume (Litres/cubic inches)		
Head Unit-19.5" Weight (Landscape)		
[kg/lb]	10.60	23.4
Head Unit-19.5" Weight (Portrait)		
[kg/lb]		

Technical Specifications – Measurement

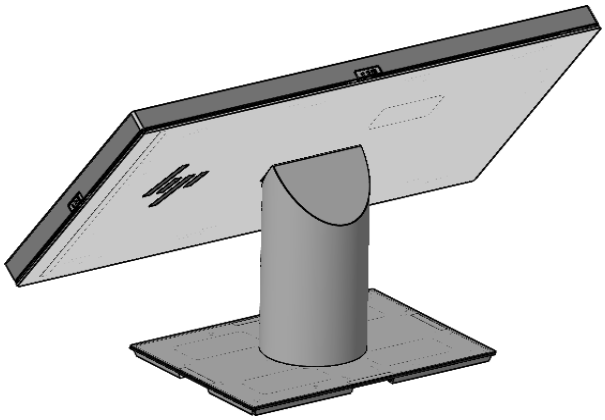

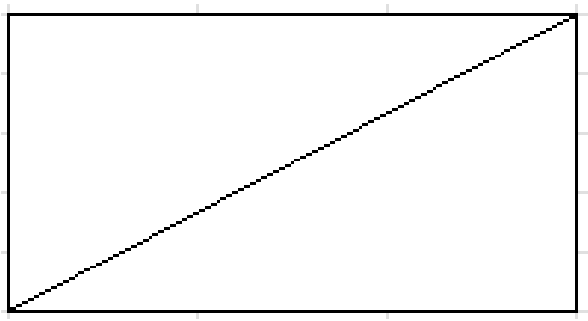

Head Unit-23.8"		
	Metric	US
Landscape dimensions (when working angle is 40~140 degree)		
Height [mm/in]	386.2	15.2
Width [mm/in]	570.4	22.5
Depth [mm/in]	254.7	10.0
Volume (Litres/cubic inches)	56.1	3423.89
Portrait does not support 40~140 degree		
Height [mm/in]		
Width [mm/in]		
Depth [mm/in]		
Volume (Litres/cubic inches)		
Head Unit-19.5" Weight (Landscape)+ Gordo Stand		
[kg/lb]	10.60	23.4
Head Unit-19.5" Weight (Portrait)+ Gordo Stand		
[kg/lb]		

Technical Specifications - Measurement

Pro Stand



Advanced Stand



Marketting Name	Pro Stand		Advanced Stand	
	Metric	US	Metric	US
Stand Dimensions(with Stability Base)				
Height [mm/in]	207.05	8.15	243.3	9.6
Width [mm/in]	305	12	305	12
Depth [mm/in]	220	8.7	220	8.7
Stand Dimensions (without Stability Base)				
Height [mm/in]	195.35	7.69	231.5	9.1
Width [mm/in]	105	4.13	110	4.3
Depth [mm/in]	105	4.13	110	4.3
Stand Weight with Stability Base				
Weight [kg/lb]	2.35	5.2	3.1	6.8
Stand Weight without Stability Base				
Weight [kg/lb]	0.95	2.1	1.7	3.7

Technical Specifications – Measurement

Engage One Pro G2 Advanced Fanless hub		
	Metric	US
Hub Dimensions (with Lifted Hub surround)		
Height [mm/in]	220.3	8.7
Width [mm/in]	305.3	12.0
Depth [mm/in]	36.7	1.4
Hub Dimensions (Without Lifted Hub surround)		
Height [mm/in]	100.0	3.9
Width [mm/in]	275.0	10.8
Depth [mm/in]	28.5	1.1
Hub Weight with Lifted Hub surround		
Weight [kg/lb]	1.00	2.2
Hub Weight (without Spring Hub surround) or Possum Hub Only		
Weight [kg/lb]	0.69	1.5

Engage One Pro G2 Advanced Fanless hub		
	Metric	US
Hub Dimensions (with U-shape Hub surround)		
Height [mm/in]	220.3	8.7
Width [mm/in]	305.3	12.0
Depth [mm/in]	36.7	1.4
Hub Dimensions (Without U-shape Hub surround)		
Height [mm/in]	100.0	3.9
Width [mm/in]	275.0	10.8
Depth [mm/in]	28.5	1.1
Hub Weight with Normal Hub surround		
Weight [kg/lb]	1.00	2.2
Hub Weight (without Spring Hub surround) or Possum Hub Only		
Weight [kg/lb]	0.69	1.5

Technical Specifications - Measurement

HP Engage One Pro G2 VESAhub and Hubless USB-A		
	Metric	US
Dimensions		
Height [mm/in]	150.0	5.9
Width [mm/in]	125.0	4.9
Depth [mm/in]	24.4	1.0
Weight(Without Adapter)		
[kg/lb]	0.54	1.20

HP Engage One Pro G2 Slim VESAMount		
	Metric	US
Dimensions		
Height [mm/in]	120.0	4.7
Width [mm/in]	120.0	4.7
Depth [mm/in]	10.5	0.4
Weight		
[kg/lb]	0.23	0.51

Engage Pro G2 Advanced Stand		
	Metric	US
Stand Dimensions(with Stability Base)		
Height [mm/in]	243.3	9.6
Width [mm/in]	305.0	12.0
Depth [mm/in]	220.0	8.7
Stand Dimensions (without Stability Base)		
Height [mm/in]	231.5	9.1
Width [mm/in]	110.0	4.3
Depth [mm/in]	110.0	4.3
Stand Weight with Stability Base (without wombat)		
Weight [kg/lb]	3.13	6.9
Stand Weight without Stability Base (without wombat)		

Technical Specifications - Measurement

Weight [kg/lb]	1.70	3.7

Engage Pro G2 Stand		
	Metric	US
Stand Dimensions(with Stability Base)		
Height [mm/in]	239.3	9.0
Width [mm/in]	308.0	13.0
Depth [mm/in]	220.0	8.7
Stand Dimensions (without Stability Base)		
Height [mm/in]	239.3	9.0
Width [mm/in]	110.0	4.3
Depth [mm/in]	110.0	4.3
Stand Weight with Stability Base (without wombat)		
Weight [kg/lb]	3.13	6.9
Stand Weight without Stability Base (without wombat)		
Weight [kg/lb]	0.91	2

Technical Specifications - Miscellaneous Features

System Summary Dimension Matrix Summary table

Display Heads Only	Width (Horizontal) [mm]	Height (Vertical) [mm]	Thickness [mm]
15.6 Landscape	397.6	241.0	26.4
19.5 Landscape	494.8	292.6	29.4
23.8 Landscape	576.4	339.9	29.4
15.6 Portrait	241.0	391.6	26.4
19.5 Portrait	292.6	488.8	29.4
23.8 Portrait- Slim VESA only*	339.9	570.4	29.4

NOTE: *23.8" Portrait can only be support with SLIM VESA mount, not configurable with any Column stand, not configurable with column hub

	Width [mm]	Depth [mm]	Thickness [mm]
Stability Base Only	305.0	220.0	11.7
Stability Base With Advance Hub	305.0	220.0	38.7
Delta Height with Advance hub (Note 1 – Add 27 mm to height dimensions when using with the Advance Hub)	305.0	220.0	27.0

10" CFD module		
	Metric	US
10" CFD Dimensions		
Height [mm/in]	170.2	6.7
Width [mm/in]	246.2	9.7
Depth [mm/in]	18.0	0.7
Weight(Without cable) [kg/lb]	1.00	2.20

MISCELLANEOUS FEATURES

Management Features

- Advanced Configuration and Power Management Interface (ACPI). Allows the system to wake from a low power mode.
- Controls system power consumption, making it possible to place individual cards and peripherals in a low-power or powered-off state without affecting other elements of the system.
- Intel® Wired for Management support; industry wide initiative to make Intel® architecture based PCs, servers and mobile computers more inherently manageable out-of-the-box and over the network
- Dual State Power Button; acts as both an on/off button and a suspend-to-sleep button

HP Point of Sale Diagnostics UEFI:

- This utility enables hardware level testing outside the operating system on many components. The diagnostics can be invoked by pressing F2 at POST, and is available as a download from HP Support

Serviceability Features:

- System/Emergency ROM
- Flash ROM
- Flash Recovery with Video Configuration Record Software
- Over-Temp Warning on Screen (Requires IM Agents)
- Clear Password Jumper
- Clear CMOS Button
- Color coordinated cables and connectors
- Front power switch
- System memory can be upgraded without removing the system board or any internal components

Interpreting System Validation Diagnostic Front Panel LEDs and Audible Codes

During the system validation phase that occurs at system startup, the BIOS validates the functionality of the following subsystems and conditions:

- AC adapter
- System board power
- Processor failure
- BIOS corruption
- Memory failure
- Graphics failure
- System board failure
- BIOS authentication failure

If an error is detected, specific patterns of long and short blinks, accompanied by long and short beeps (where applicable) are used to identify the error. These patterns 48esi make up a two part code:

- Major – the category of the error
- Minor – the specific error within the category

NOTE: Single beep/blink codes are not used.

Number of long beeps/blinks	Error category
1	Not used
2	BIOS

3	Hardware
4	Thermal
5	System board

Patterns of blink/beep codes are determined by using the following parameters:

- 1 second pause occurs after the last major blink.
- 2 second pause occurs after the last minor blink.
- Beep error code sequences occur for the first 5 iterations of the pattern and then stop.
- Blink error code sequences continue until the computer is unplugged or the power button is pressed.

NOTE: Not all diagnostic lights and audible codes are available on all models.

The red LED blinks to represent the major error category (long blinks). The white LED blinks to represent the minor error category (short blinks). For example, '3.5' indicates 3 long red blinks and 5 short white blinks to communicate the processor is not detected.

Category	Major/minor code	Description
BIOS	2.2	The main area (DXE) of BIOS has become corrupted and there is no recovery binary image available.
	2.3	The embedded controller policy requires the user to enter a key sequence.
	2.4	The embedded controller is checking or recovering the boot block.
Hardware	3.2	The embedded controller has timed out waiting for BIOS to return from memory initialization.
	3.3	The embedded controller has timed out waiting for BIOS to return from graphics initialization.
	3.4	The system board displays a power failure (crowbar).*
	3.5	The processor is not detected.*
	3.6	The processor does not support an enabled feature.
Thermal	4.2	A processor over temperature condition has been detected.*
	4.3	An ambient temperature over temperature condition has been detected.
	4.4	An MXM over temperature condition has been detected.
System board	5.2	The embedded controller cannot find valid firmware.
	5.3	The embedded controller has timed out waiting for the BIOS.
	5.4	The embedded controller has timed out waiting for BIOS to return from system board initialization.
	5.5	The embedded controller rebooted the system after a possible lockup condition had been detected through the use of a System Health Timer, Automated System Recovery Timer, or other mechanism.

* Indicates hardware triggered event; all other events are controlled by the BIOS.

TEMPERATURE, HUMIDITY, ALTITUDE

Temperature	**Operating**	50° to 104° F (10 to 40° C)

Technical Specifications - Miscellaneous Features

	Non-operating	-22° to 149° F (-30°to 65° C)
Humidity	**Operating**	20%-85% relative humidity at max inlet temperature
	Non Operating	20%-85% relative humidity at max inlet temperature
Shock	**Operating**	40g, six surfaces
	Non Operating	30g, six surfaces
Vibration	**Operating**	2-g peak acceleration
	Non Operating	3-g peak acceleration
Altitude (unpressurized)	**Operating**	0 to 10,000 ft (3,048 m)
	Non-operating	0 to 30,000 ft (9,144 m)

Technical Specifications - Environmental

ENVIRONMENTAL & INDUSTRY

Environmental Data

HP Engage One Pro G2 AiO System Model 15.6"

Eco-Label Certifications & declarations

This product has received or is in the process of being certified to the following approvals and may be labeled with one or more of these marks:

- IT ECO declaration
- US ENERGY STAR®
- US Federal Energy Management Program (FEMP)
- EPEAT® Gold registered in the United States. See http://www.epeat.net for registration status in your country.
- China Energy Conservation Program (CECP)
- China State Environmental Protection Administration (SEPA)
- Taiwan Green Mark
- Korea Eco-label
- Japan PC Green label*

*Based on US EPEAT® registration according to IEEE 1680.1-2018 EPEAT®. EPEAT® status varies by country. Visit http://www.epeat.net for more information

Sustainable Impact Specifications

- Product Carbon Footprint
- At least 50% ocean bound plastic in the (CPU Fan and System Fan)and 5% ocean bound plastic in the (Speaker)[1]
- At least 3% ITE-Derived closed loop plastic[2]
- At least 70% post-consumer recycled plastic[2]
- At least 40% recycled metal[3]
- External Power Supply 90% Efficiency
- Low Halogen[4]

100% of HP paper-based packaging is from recycled or certified sustainable sources[5]

System Configuration

The configuration used for the Energy Consumption and Declared Noise Emissions data for the Engage One Pro model is based on a typically configured system featuring an SSD, a high efficiency power supply, and a Microsoft Windows® operating system.

Energy Consumption (in accordance with US ENERGY STAR® test method)	**115VAC, 60Hz**	**230VAC, 50Hz**	**100VAC, 50Hz**
Normal Operation (Short idle)	10.30 W	10.69 W	10.25 W
Normal Operation (Long idle)	5.18 W	5.16 W	5.12 W
Sleep	1.81 W	1.84 W	1.81 W
Off	0.92 W	0.94 W	0.91 W

Note:
Energy efficiency data listed is for an ENERGY STAR® compliant product if offered within the model family. HP computers marked with the ENERGY STAR® Logo are compliant with the applicable U.S. Environmental Protection Agency (EPA) ENERGY STAR® specifications for computers. If a model family does not offer ENERGY STAR® compliant configurations, then energy efficiency data listed is for a typically configured PC featuring a hard disk drive, a high efficiency power supply, and a Microsoft Windows® operating system.

Heat Dissipation*	**115VAC, 60Hz**	**230VAC, 50Hz**	**100VAC, 50Hz**
Normal Operation (Short idle)	35 BTU/hr	37 BTU/hr	35 BTU/hr
Normal Operation (Long idle)	18 BTU/hr	18 BTU/hr	18 BTU/hr
Sleep	6 BTU/hr	6 BTU/hr	6 BTU/hr

Technical Specifications - Environmental

Off	3 BTU/hr	3 BTU/hr	3 BTU/hr

* Heat dissipation is calculated based on the measured watts, assuming the service level is attained for one hour

Declared Noise Emissions (in accordance with ISO 7779 and ISO 9296)	**Sound Power (L_{WAd}, bels)**	**Sound Pressure (L_{pAm}, decibels)**
Typically Configured – Idle	2.6	23.2
Fixed Disk – Random writes	2.7	23.7
Optical Drive – Sequential reads	N/A	N/A

Longevity and Upgrading

This product can be upgraded, possibly extending its useful life by several years. Upgradeable features and/or components contained in the

Spare parts are available throughout the warranty period and or for up to "5" years after the end of production.

Additional Information

- This product is in compliance with the Restrictions of Hazardous Substances (RoHS) directive – 2011/65/EC.
- This HP product is designed to comply with the Waste Electrical and Electronic Equipment (WEEE) Directive – 2002/96/EC.
- This product is in compliance with California Proposition 65 (State of California; Safe Drinking Water and Toxic Enforcement Act of 1986).
- This product is in compliance with the IEEE 1680.1 (EPEAT) standard at the <Gold> level, see http://www.epeat.net
- Plastics parts weighing over 25 grams used in the product are marked per ISO11469 and ISO1043.
- This product is 95.6% recycle-able when properly disposed of at end of life.

Packaging Materials

External:	PAPER/Corrugated	1309 g
	PAPER/Molded Pulp	490 g
Internal:	PLASTIC/Polyethylene Expanded – EPE	154 g
	PLASTIC/Polyethylene high density – HDPE	14 g
	PLASTIC/Polyethylene low density - LDPE	4

The plastic packaging material contains at least 97% recycled content.

The corrugated paper packaging materials contains at least 91.7% recycled content.

RoHS Compliance

HP Inc. complies fully with materials regulations. We were among the first companies to extend the restrictions in the European Union (EU) Restriction of Hazardous Substances (RoHS) Directive to our products worldwide through the HP GSE. HP has contributed to the development of related legislation in Europe, as well as China, India, and Vietnam.

We believe the RoHS directive and similar laws play an important role in promoting industry-wide elimination of substances of concern. We have supported the inclusion of additional substances—including PVC, BFRs, and certain phthalates—in future RoHS legislation that pertains to electrical and electronics products.

We met our voluntary objective to achieve worldwide compliance with the new EU RoHS requirements for virtually all relevant products by July 2013, and we will continue to extend the scope of the commitment to include further restricted substances as regulations continue to evolve.

To obtain a copy of the HP RoHS Compliance Statement, see HP RoHS position statement.

Technical Specifications - Environmental

Material Usage

This product does not contain any of the following substances in excess of regulatory limits (refer to the HP General Specification for the Environment at http://www.hp.com/hpinfo/globalcitizenship/environment/pdf/gse.pdf):

- Asbestos
- Certain Azo Colorants
- Certain Brominated Flame Retardants – may not be used as flame retardants in plastics
- Cadmium
- Chlorinated Hydrocarbons
- Chlorinated Paraffins
- Bis(2-Ethylhexyl) phthalate (DEHP)
- Benzyl butyl phthalate (BBP)
- Dibutyl phthalate (DBP)
- Diisobutyl phthalate (DIBP)
- Formaldehyde
- Halogenated Diphenyl Methanes
- Lead carbonates and sulfates
- Lead and Lead compounds
- Mercuric Oxide Batteries
- Nickel – finishes must not be used on the external surface designed to be frequently handled or carried by the user.
- Ozone Depleting Substances
- Polybrominated Biphenyls (PBBs)
- Polybrominated Biphenyl Ethers (PBBEs)
- Polybrominated Biphenyl Oxides (PBBOs)
- Polychlorinated Biphenyl (PCB)
- Polychlorinated Terphenyls (PCT)
- Polyvinyl Chloride (PVC) – except for wires and cables, and certain retail packaging has been voluntarily removed from most applications.
- Radioactive Substances
- Tributyl Tin (TBT), Triphenyl Tin (TPT), Tributyl Tin Oxide (TBTO)

Notes: * EPE foam packaging material is considered "recycled" pre-Consumer. The scrap or waste EPE material from the manufacturing process of these EPE foam pieces are re-introduced into the manufacturing process.

Packaging Usage

HP follows these guidelines to decrease the environmental impact of product packaging:

- Eliminate the use of heavy metals such as lead, chromium, mercury and cadmium in packaging materials.
- Eliminate the use of ozone-depleting substances (ODS) in packaging materials.
- Design packaging materials for ease of disassembly.
- Maximize the use of post-consumer recycled content materials in packaging materials.
- Use readily recyclable packaging materials such as paper and corrugated materials.
- Reduce size and weight of packages to improve transportation fuel efficiency.
- Plastic packaging materials are marked according to ISO 11469 and DIN 6120 standards.

Technical Specifications - Environmental

End-of-life Management and Recycling

HP offers end-of-life HP product return and recycling programs in many geographic areas. To recycle your product, please go to: https://h20195.www2.hp.com/V2/GetDocument.aspx?docname=c05403198 or contact your nearest HP sales office. Products returned to HP will be recycled, recovered or disposed of in a responsible manner.

The EU WEEE directive (2002/95/EC) requires manufacturers to provide treatment information for each product type for use by treatment facilities. This information (product disassembly instructions) is posted on the Hewlett Packard web site at: HP Product Disassembly Instruction Website. These instructions may be used by recyclers and other WEEE treatment facilities as well as HP OEM customers who integrate and re-sell HP equipment.

HP Inc. Corporate Environmental Information

For more information about HP's commitment to the environment:

- Sustainable Impact Report
  - https://h20195.www2.hp.com/v2/GetDocument.aspx?docname=c06040843
- Eco-label certifications
  - https://www.hp.com/us-en/sustainable-impact/document-reports.html#filters_documents_reports-=document_type-type_energy_star,type_epeat,type_tcoISO
- ISO 14001 certificates
  - https://h20195.www2.hp.com/v2/GetDocument.aspx?docname=c04777932

Footnotes

1. Percentage of ocean-bound plastic contained in each component varies by product. Ocean Bound plastic is expressed as a percentage of the total weight plastic. Ocean Bound plastic is based on the definition set by the UL2809 standard.
2. Recycled plastic is expressed as a percentage of the total weight plastic. Post-consumer recycled is based on the definition set in the EPEAT standard for computers, IEEE 1680.1-2018 standard.
3. Recycled metal is expressed as a percentage of the total weight of the metal according to ISO 14021 definitions for metal parts over 25 grams.
4. External power supplies, WWAN modules, power cords, cables and peripherals excluded. Service parts obtained after purchase may not be Low Halogen.
5. HP paper and fiber-based packaging for PCs, displays, home and office print, and supplies is reported by suppliers as recycled or certified, with a minimum of 97% by volume verified by HP. Packaging is the box that comes with the product and all paper-based materials inside the box. Packaging for personal systems accessories and spare parts is not included. Plastic cushions are made from >90% recycled plastic.

HP Engage One Pro G2 AiO System Model 19.5"

Eco-Label Certifications & declarations

This product has received or is in the process of being certified to the following approvals and may be labeled with one or more of these marks:

- IT ECO declaration
- US ENERGY STAR®
- US Federal Energy Management Program (FEMP)
- EPEAT® Gold registered in the United States. See http://www.epeat.net for registration status in your country.
- China Energy Conservation Program (CECP)
- China State Environmental Protection Administration (SEPA)
- Taiwan Green Mark

Technical Specifications - Environmental

- Korea Eco-label
- Japan PC Green label*

*Based on US EPEAT® registration according to IEEE 1680.1-2018 EPEAT®. EPEAT® status varies by country. Visit http://www.epeat.net for more information

Sustainable Impact Specifications

- Product Carbon Footprint
- At least 50% ocean bound plastic in the (CPU Fan and System Fan)and 5% ocean bound plastic in the (Speaker)[1]
- At least 70% post-consumer recycled plastic[2]
- At least 40% recycled metal[3]
- External Power Supply 90% Efficiency
- Low Halogen[4]
- 100% of HP paper-based packaging is from recycled or certified sustainable sources[5]

System Configuration

The configuration used for the Energy Consumption and Declared Noise Emissions data for the Engage One Pro model is based on a typically configured system featuring an SSD, a high efficiency power supply, and a Microsoft Windows® operating system.

Energy Consumption (in accordance with US ENERGY STAR® test method)	**115VAC, 60Hz**	**230VAC, 50Hz**	**100VAC, 50Hz**
Normal Operation (Short idle)	17.27 W	17.06 W	16.91 W
Normal Operation (Long idle)	5.42 W	5.41 W	5.45 W
Sleep	1.52 W	1.55 W	1.52 W
Off	0.94 W	0.96 W	0.94 W

Note:
Energy efficiency data listed is for an ENERGY STAR® compliant product if offered within the model family. HP computers marked with the ENERGY STAR® Logo are compliant with the applicable U.S. Environmental Protection Agency (EPA) ENERGY STAR® specifications for computers. If a model family does not offer ENERGY STAR® compliant configurations, then energy efficiency data listed is for a typically configured PC featuring a hard disk drive, a high efficiency power supply, and a Microsoft Windows® operating system.

Heat Dissipation*	**115VAC, 60Hz**	**230VAC, 50Hz**	**100VAC, 50Hz**
Normal Operation (Short idle)	59 BTU/hr	58 BTU/hr	58 BTU/hr
Normal Operation (Long idle)	19 BTU/hr	19 BTU/hr	19 BTU/hr
Sleep	5 BTU/hr	5 BTU/hr	5 BTU/hr
Off	3 BTU/hr	3 BTU/hr	3 BTU/hr

* Heat dissipation is calculated based on the measured watts, assuming the service level is attained for one hour

Declared Noise Emissions (in accordance with ISO 7779 and ISO 9296)	**Sound Power (L_{WAd}, bels)**	**Sound Pressure (L_{pAm}, decibels)**
Typically Configured – Idle	2.6	16.3
Fixed Disk – Random writes	2.6	16.3
Optical Drive – Sequential reads	2.6	17.0

Longevity and Upgrading

This product can be upgraded, possibly extending its useful life by several years. Upgradeable features and/or components contained in the

Spare parts are available throughout the warranty period and or for up to "5" years after the end of production.

Technical Specifications - Environmental

Additional Information

- This product is in compliance with the Restrictions of Hazardous Substances (RoHS) directive – 2011/65/EC.
- This HP product is designed to comply with the Waste Electrical and Electronic Equipment (WEEE) Directive – 2002/96/EC.
- This product is in compliance with California Proposition 65 (State of California; Safe Drinking Water and Toxic Enforcement Act of 1986).
- This product is in compliance with the IEEE 1680.1 (EPEAT) standard at the <Gold> level, see http://www.epeat.net
- Plastics parts weighing over 25 grams used in the product are marked per ISO11469 and ISO1043.
- This product is 96.9% recycle-able when properly disposed of at end of life.

Packaging Materials

External:	PAPER/Corrugated	1389 g
	PAPER/Molded Pulp	699 g
Internal:	PLASTIC/Polyethylene Expanded – EPE	308 g
	PLASTIC/Polyethylene high density – HDPE	25 g
	PLASTIC/Polyethylene low density - LDPE	4

The plastic packaging material contains at least 97% recycled content.

The corrugated paper packaging materials contains at least 96% recycled content.

RoHS Compliance

HP Inc. complies fully with materials regulations. We were among the first companies to extend the restrictions in the European Union (EU) Restriction of Hazardous Substances (RoHS) Directive to our products worldwide through the HP GSE. HP has contributed to the development of related legislation in Europe, as well as China, India, and Vietnam.

We believe the RoHS directive and similar laws play an important role in promoting industry-wide elimination of substances of concern. We have supported the inclusion of additional substances—including PVC, BFRs, and certain phthalates—in future RoHS legislation that pertains to electrical and electronics products.

We met our voluntary objective to achieve worldwide compliance with the new EU RoHS requirements for virtually all relevant products by July 2013, and we will continue to extend the scope of the commitment to include further restricted substances as regulations continue to evolve.

To obtain a copy of the HP RoHS Compliance Statement, see HP RoHS position statement.

Material Usage

This product does not contain any of the following substances in excess of regulatory limits (refer to the HP General Specification for the Environment at http://www.hp.com/hpinfo/globalcitizenship/environment/pdf/gse.pdf):

- Asbestos
- Certain Azo Colorants
- Certain Brominated Flame Retardants – may not be used as flame retardants in plastics
- Cadmium
- Chlorinated Hydrocarbons
- Chlorinated Paraffins
- Bis(2-Ethylhexyl) phthalate (DEHP)
- Benzyl butyl phthalate (BBP)
- Dibutyl phthalate (DBP)
- Diisobutyl phthalate (DIBP)

- Formaldehyde
- Halogenated Diphenyl Methanes
- Lead carbonates and sulfates
- Lead and Lead compounds
- Mercuric Oxide Batteries
- Nickel – finishes must not be used on the external surface designed to be frequently handled or carried by the user.
- Ozone Depleting Substances
- Polybrominated Biphenyls (PBBs)
- Polybrominated Biphenyl Ethers (PBBEs)
- Polybrominated Biphenyl Oxides (PBBOs)
- Polychlorinated Biphenyl (PCB)
- Polychlorinated Terphenyls (PCT)
- Polyvinyl Chloride (PVC) – except for wires and cables, and certain retail packaging has been voluntarily removed from most applications.
- Radioactive Substances
- Tributyl Tin (TBT), Triphenyl Tin (TPT), Tributyl Tin Oxide (TBTO)

Notes: * EPE foam packaging material is considered "recycled" pre-Consumer. The scrap or waste EPE material from the manufacturing process of these EPE foam pieces are re-introduced into the manufacturing process.

Packaging Usage

HP follows these guidelines to decrease the environmental impact of product packaging:

- Eliminate the use of heavy metals such as lead, chromium, mercury and cadmium in packaging materials.
- Eliminate the use of ozone-depleting substances (ODS) in packaging materials.
- Design packaging materials for ease of disassembly.
- Maximize the use of post-consumer recycled content materials in packaging materials.
- Use readily recyclable packaging materials such as paper and corrugated materials.
- Reduce size and weight of packages to improve transportation fuel efficiency.
- Plastic packaging materials are marked according to ISO 11469 and DIN 6120 standards.

End-of-life Management and Recycling

HP offers end-of-life HP product return and recycling programs in many geographic areas. To recycle your product, please go to: https://h20195.www2.hp.com/V2/GetDocument.aspx?docname=c05403198 or contact your nearest HP sales office. Products returned to HP will be recycled, recovered or disposed of in a responsible manner.

The EU WEEE directive (2002/95/EC) requires manufacturers to provide treatment information for each product type for use by treatment facilities. This information (product disassembly instructions) is posted on the Hewlett Packard web site at: HP Product Disassembly Instruction Website. These instructions may be used by recyclers and other WEEE treatment facilities as well as HP OEM customers who integrate and re-sell HP equipment.

Technical Specifications - Environmental

HP Inc. Corporate Environmental Information

For more information about HP's commitment to the environment:

- Sustainable Impact Report
  - https://h20195.www2.hp.com/v2/GetDocument.aspx?docname=c06040843
- Eco-label certifications
  - https://www.hp.com/us-en/sustainable-impact/document-reports.html#filters_documents_reports-=document_type-type_energy_star,type_epeat,type_tcoISO
- ISO 14001 certificates
  - https://h20195.www2.hp.com/v2/GetDocument.aspx?docname=c04777932

Footnotes

1. Percentage of ocean-bound plastic contained in each component varies by product. Ocean Bound plastic is expressed as a percentage of the total weight plastic. Ocean Bound plastic is based on the definition set by the UL2809 standard.
2. Recycled plastic is expressed as a percentage of the total weight plastic. Post-consumer recycled is based on the definition set in the EPEAT standard for computers, IEEE 1680.1-2018 standard.
3. Recycled metal is expressed as a percentage of the total weight of the metal according to ISO 14021 definitions for metal parts over 25 grams.
4. External power supplies, WWAN modules, power cords, cables and peripherals excluded. Service parts obtained after purchase may not be Low Halogen.
5. HP paper and fiber-based packaging for PCs, displays, home and office print, and supplies is reported by suppliers as recycled or certified, with a minimum of 97% by volume verified by HP. Packaging is the box that comes with the product and all paper-based materials inside the box. Packaging for personal systems accessories and spare parts is not included. Plastic cushions are made from >90% recycled plastic.

HP Engage One Pro G2 AiO System Model 23.8"

Eco-Label Certifications & declarations

This product has received or is in the process of being certified to the following approvals and may be labeled with one or more of these marks:

- IT ECO declaration
- US ENERGY STAR®
- US Federal Energy Management Program (FEMP)
- EPEAT® Gold registered in the United States. See http://www.epeat.net for registration status in your country.
- China Energy Conservation Program (CECP)
- China State Environmental Protection Administration (SEPA)
- Taiwan Green Mark
- Korea Eco-label
- Japan PC Green label*

*Based on US EPEAT® registration according to IEEE 1680.1-2018 EPEAT®. EPEAT® status varies by country. Visit http://www.epeat.net for more information

Sustainable Impact Specifications

- Product Carbon Footprint
- At least 50% ocean bound plastic in the (CPU Fan and System Fan)and 5% ocean bound plastic in the (Speaker)[1]
- At least 70% post-consumer recycled plastic[2]
- At least 35% recycled metal[3]
- External Power Supply 90% Efficiency

Technical Specifications - Environmental

- Low Halogen[4]
- 100% of HP paper-based packaging is from recycled or certified sustainable sources[5]

System Configuration

The configuration used for the Energy Consumption and Declared Noise Emissions data for the Engage One Pro model is based on a typically configured system featuring an SSD, a high efficiency power supply, and a Microsoft Windows® operating system.

Energy Consumption (in accordance with US ENERGY STAR® test method)	**115VAC, 60Hz**	**230VAC, 50Hz**	**100VAC, 50Hz**
Normal Operation (Short idle)	21.73 W	21.91 W	21.42 W
Normal Operation (Long idle)	6.18 W	6.35 W	6.13 W
Sleep	1.62 W	1.62 W	1.61 W
Off	0.91 W	0.95 W	0.91 W

Note:
Energy efficiency data listed is for an ENERGY STAR® compliant product if offered within the model family. HP computers marked with the ENERGY STAR® Logo are compliant with the applicable U.S. Environmental Protection Agency (EPA) ENERGY STAR® specifications for computers. If a model family does not offer ENERGY STAR® compliant configurations, then energy efficiency data listed is for a typically configured PC featuring a hard disk drive, a high efficiency power supply, and a Microsoft Windows® operating system.

Heat Dissipation*	**115VAC, 60Hz**	**230VAC, 50Hz**	**100VAC, 50Hz**
Normal Operation (Short idle)	74 BTU/hr	75 BTU/hr	73 BTU/hr
Normal Operation (Long idle)	21 BTU/hr	22 BTU/hr	21 BTU/hr
Sleep	6 BTU/hr	6 BTU/hr	6 BTU/hr
Off	3 BTU/hr	3 BTU/hr	3 BTU/hr

* Heat dissipation is calculated based on the measured watts, assuming the service level is attained for one hour

Declared Noise Emissions (in accordance with ISO 7779 and ISO 9296)	**Sound Power (L_{WAd}, bels)**	**Sound Pressure (L_{pAm}, decibels)**
Typically Configured – Idle	2.7	16.1
Fixed Disk – Random writes	2.7	16.1
Optical Drive – Sequential reads	2.7	16.2

Longevity and Upgrading

This product can be upgraded, possibly extending its useful life by several years. Upgradeable features and/or components contained in the

Spare parts are available throughout the warranty period and or for up to "5" years after the end of production.

Technical Specifications - Environmental

Additional Information

- This product is in compliance with the Restrictions of Hazardous Substances (RoHS) directive – 2011/65/EC.
- This HP product is designed to comply with the Waste Electrical and Electronic Equipment (WEEE) Directive – 2002/96/EC.
- This product is in compliance with California Proposition 65 (State of California; Safe Drinking Water and Toxic Enforcement Act of 1986).
- This product is in compliance with the IEEE 1680.1 (EPEAT) standard at the <Gold> level, see http://www.epeat.net
- Plastics parts weighing over 25 grams used in the product are marked per ISO11469 and ISO1043.
- This product is 97.5% recycle-able when properly disposed of at end of life.

Packaging Materials

External:	PAPER/Corrugated	1389 g
	PAPER/Molded Pulp	699 g
Internal:	PLASTIC/Polyethylene Expanded – EPE	308 g
	PLASTIC/Polyethylene high density – HDPE	25 g
	PLASTIC/Polyethylene low density - LDPE	4

The plastic packaging material contains at least 97% recycled content.

The corrugated paper packaging materials contains at least 96% recycled content.

RoHS Compliance

HP Inc. complies fully with materials regulations. We were among the first companies to extend the restrictions in the European Union (EU) Restriction of Hazardous Substances (RoHS) Directive to our products worldwide through the HP GSE. HP has contributed to the development of related legislation in Europe, as well as China, India, and Vietnam.

We believe the RoHS directive and similar laws play an important role in promoting industry-wide elimination of substances of concern. We have supported the inclusion of additional substances—including PVC, BFRs, and certain phthalates—in future RoHS legislation that pertains to electrical and electronics products.

We met our voluntary objective to achieve worldwide compliance with the new EU RoHS requirements for virtually all relevant products by July 2013, and we will continue to extend the scope of the commitment to include further restricted substances as regulations continue to evolve.

To obtain a copy of the HP RoHS Compliance Statement, see HP RoHS position statement.

Material Usage

This product does not contain any of the following substances in excess of regulatory limits (refer to the HP General Specification for the Environment at http://www.hp.com/hpinfo/globalcitizenship/environment/pdf/gse.pdf):

- Asbestos
- Certain Azo Colorants
- Certain Brominated Flame Retardants – may not be used as flame retardants in plastics
- Cadmium
- Chlorinated Hydrocarbons
- Chlorinated Paraffins
- Bis(2-Ethylhexyl) phthalate (DEHP)
- Benzyl butyl phthalate (BBP)
- Dibutyl phthalate (DBP)
- Diisobutyl phthalate (DIBP)

- Formaldehyde
- Halogenated Diphenyl Methanes
- Lead carbonates and sulfates
- Lead and Lead compounds
- Mercuric Oxide Batteries
- Nickel – finishes must not be used on the external surface designed to be frequently handled or carried by the user.
- Ozone Depleting Substances
- Polybrominated Biphenyls (PBBs)
- Polybrominated Biphenyl Ethers (PBBEs)
- Polybrominated Biphenyl Oxides (PBBOs)
- Polychlorinated Biphenyl (PCB)
- Polychlorinated Terphenyls (PCT)
- Polyvinyl Chloride (PVC) – except for wires and cables, and certain retail packaging has been voluntarily removed from most applications.
- Radioactive Substances
- Tributyl Tin (TBT), Triphenyl Tin (TPT), Tributyl Tin Oxide (TBTO)

Notes: * EPE foam packaging material is considered "recycled" pre-Consumer. The scrap or waste EPE material from the manufacturing process of these EPE foam pieces are re-introduced into the manufacturing process.

Packaging Usage

HP follows these guidelines to decrease the environmental impact of product packaging:

- Eliminate the use of heavy metals such as lead, chromium, mercury and cadmium in packaging materials.
- Eliminate the use of ozone-depleting substances (ODS) in packaging materials.
- Design packaging materials for ease of disassembly.
- Maximize the use of post-consumer recycled content materials in packaging materials.
- Use readily recyclable packaging materials such as paper and corrugated materials.
- Reduce size and weight of packages to improve transportation fuel efficiency.
- Plastic packaging materials are marked according to ISO 11469 and DIN 6120 standards.

End-of-life Management and Recycling

HP offers end-of-life HP product return and recycling programs in many geographic areas. To recycle your product, please go to: https://h20195.www2.hp.com/V2/GetDocument.aspx?docname=c05403198 or contact your nearest HP sales office. Products returned to HP will be recycled, recovered or disposed of in a responsible manner.

The EU WEEE directive (2002/95/EC) requires manufacturers to provide treatment information for each product type for use by treatment facilities. This information (product disassembly instructions) is posted on the Hewlett Packard web site at: HP Product Disassembly Instruction Website. These instructions may be used by recyclers and other WEEE treatment facilities as well as HP OEM customers who integrate and re-sell HP equipment.

Technical Specifications - Environmental

HP Inc. Corporate Environmental Information

For more information about HP's commitment to the environment:

- Sustainable Impact Report
  - https://h20195.www2.hp.com/v2/GetDocument.aspx?docname=c06040843
- Eco-label certifications
  - https://www.hp.com/us-en/sustainable-impact/document-reports.html#filters_documents_reports-=document_type-type_energy_star,type_epeat,type_tcoISO
- ISO 14001 certificates
  - https://h20195.www2.hp.com/v2/GetDocument.aspx?docname=c04777932

Footnotes

1. Percentage of ocean-bound plastic contained in each component varies by product. Ocean Bound plastic is expressed as a percentage of the total weight plastic. Ocean Bound plastic is based on the definition set by the UL2809 standard.
2. Recycled plastic is expressed as a percentage of the total weight plastic. Post-consumer recycled is based on the definition set in the EPEAT standard for computers, IEEE 1680.1-2018 standard.
3. Recycled metal is expressed as a percentage of the total weight of the metal according to ISO 14021 definitions for metal parts over 25 grams.
4. External power supplies, WWAN modules, power cords, cables and peripherals excluded. Service parts obtained after purchase may not be Low Halogen.
5. HP paper and fiber-based packaging for PCs, displays, home and office print, and supplies is reported by suppliers as recycled or certified, with a minimum of 97% by volume verified by HP. Packaging is the box that comes with the product and all paper-based materials inside the box. Packaging for personal systems accessories and spare parts is not included. Plastic cushions are made from >90% recycled plastic.

HP Engage One After Market Option Matrix

HP Engage One Pro Advance Hubs & cable AMOs

AMO Part No.	Description
9YH40AA#xxx	HP Engage One Pro G2 Adv Fan-less Hub *
156N6AA#xxx	HP Engage One Pro G2 Adv Fan-less Hub White *

*Included 280W PSU/1.8M cord, need one of the separate cable below

2Z8M9AA	HP Engage One Pro G2 2m USB-C® cable black
2Z8N0AA	HP Engage One Pro G2 0.5m USB-C® cable black
2Z8N2AA	HP Engage One Pro G2 2m USB-C® cable gray
2Z8N1AA	HP Engage One Pro G2 0.5m USB-C® cable gray
201A2AA	HP Engage One Pro G2 Column/ VESA hub to Advance hub 2m black
201A1AA	HP Engage One Pro G2 Column/ VESA hub to Advance hub 0.5m black
316D6AA	HP Engage One Pro G2 Column/ VESA hub to Ad hub 2m gray
316D7AA	HP Engage One Pro G2 Column/ VESA hub to Ad hub 0.5m gray

HP Engage One Pro G2 VESAHubs & cable AMOs

AMO Part No.	Description
9YH42AA#xxx	Engage One Pro VESAHub**

**Included 230WPSU/ 1.8Mcord &cable

Additional Cable available to connect the Column hub or the VESA hub to the Advance hub below

201A2AA	HP Engage One Pro G2 Column/VESA hub to Advance hub 2m black
201A1AA	HP Engage One Pro G2 Column/VESA hub to Advance hub 0.5m black
316D6AA	HP Engage One Pro G2 Column/VESA hub to Ad hub 2m gray
316D7AA	HP Engage One Pro G2 Column/VESA hub to Ad hub 0.5m gray

HP Engage One Pro G2 Mounting Option AMOs

AMO Part No.	Description
1A4E7AA	Engage One Pro Slim VESA
326R7AA	Engage One Pro Slim VESAWhite
9YH43AA	Engage One Pro U-shaped Adapter
156N7AA	Engage One Pro U-shaped Adapter White
1A4E5AA	HP Engage One Pro G2 AiOStability Plate
1A4E6AA	HP Engage One Pro G2 AiOStability Plate White

HP Engage One After Market Option Matrix

2W7M4AA	Engage One Pro Flexible Pole Single Mount
2W7M3AA	Engage One Pro Flexible Back-to-Back Bracket
9YH51AA	Engage One Pro Undercounter Mount

HP Engage One Pro G2 Mounting Option AMOs

AMO Part No.	Description
2W7M4AA	Engage One Pro Flexible Pole Single Mount
2W7M3AA	Engage One Pro Flexible Back-to-Back Bracket

HP Engage One Pro G2 Customer Facing Displays (CFDs)

AMO Part No.	Description
B11G3AA	HP Engage 6.9 inch Black Display
B11G4AA	HP Engage 6.9 inch White Display
1XD80AA#ABA,#ABT,#AC3	HP Engage One 10 Display
1XD81AA#ABA,#ABT,#AC3	HP Engage One 10t Display
3FH66AA#ABA,#ABT,#AC3	HP Engage One 10w Display
3FH67AA#ABA,#ABT,#AC3	HP Engage One 10tw Display
20C49AA#AB1,#AB2,#ABT,#AC3	HP Engage One 14 FHDMonitor
20C50AA#AB1,#AB2,#ABT,#AC3	HP Engage One 14 FHDNo Stand Monitor
20C51AA#AB1,#AB2,#ABT,#AC3	HP Engage One 14t FHDMonitor
20C52AA#AB1,#AB2,#ABT,#AC3	HP Engage One 14t FHDNo Stand Monitor
2D9V5AA#ABT,#AC3	HP Engage One 16t FHDMonitor
2D9X0AA#ABT,#AC3	HP Engage One 16t FHDNo Stand Monitor
2D9Y5AA#ABT,#AC3	HP Engage One 16ts FHDMonitor
2D9Z4AA#ABT,#AC3	HP Engage One 16ts FHDNo Stand Monitor

HP Engage One Pro G2 Customer Facing Displays (CFDs) Stands

AMO Part No.	Description
10P60AA	HP Engage 6 Clean Mount Arm Bracket
10P61AA	HP Engage 6 Stability Mount Arm Bracket
10P77AA	HP Engage 10 Clean Mount Stand

HP Engage One After Market Option Matrix

10P78AA	HP Engage 10 Stability Mount Stand
10P58AA	HP Engage 14 Clean Mount Stand
10P62AA	HP Engage 14 Stability Mount Stand

HP Integrated Peripherals AMOs

AMO Part No.	Description
9YH50AA	HP Engage One Pro G2 Fingerprint Reader
2U551AA	HP Engage One Pro G2 Magnetic Stripe Reader
2V9G4AA	HP Engage One Pro G2 White Magnetic Stripe Reader
9YH49AA#AB4, #ABA, #ABB	HP Engage One Pro G2 Bar Code Scanner

HP All-in-One Adjustable Height Stand

For Engage One Pro 23.8” All-in-One systems



HP Engage One After Market Option Matrix



Model

HP All-in-One Adjustable Height Stand Black	518U6AA
HP All-in-One Adjustable Height Stand White	518U7AA

Introduction

Optimize viewing of the Engage One Pro 23.8” All-in-One system with the HP All-in-One Adjustable Height Stand. Available in either black or white, this stand allows for height adjustment, tilt, and pan.

Key Features and Benefits

- Position All-in-One for maximum ergonomic comfort—promotes wellness in any work area
- Small footprint frees up your workspace and increases your efficiency
- Integrated base rollers enable 360° rotation of the stand so you can share your views with others
- Features technology that enables light touch adjustments without levers or knobs
- Five-inch (13 cm) height adjustment (landscape mode) ergonomically accommodates average range of users
- Easy to use—simple installation and effortless operation
- Everything is included to neatly route cables behind the stand, out of the way
- IEC 62368-1 certified

Compatibility

HP Engage One After Market Option Matrix

The HP All-in-One Adjustable Height Stands are compatible with the Engage One Pro 23.8" All-in-One system, both in portrait and landscape orientation, when an Engage One Pro VESA Mount or VESA Hub is configured on the system.

Requirements: The Engage One Pro VESA Mount or the Engage One Pro VESA Hub is required to mount the HP Engage One Pro G2 23.8" system onto the HP All-in-One Adjustable Height Stand. SKU options are listed below and are sold separately from the stand.

Drop-in-box SKUs (for configuration with HP Engage One Pro G2 system)

For black systems:

- HP Engage One Pro G2 AiO Slim VESA Mount (A30MJAV)
- HP Engage One Pro G2 AiO VESA Hub (A30MMAV)

For white systems:

- HP Engage One Pro G2 AiO Slim VESA Mount White (A30MKAV)
- HP Engage One Pro G2 AiO VESA Hub White (A30MNAV)

After-market option SKUs

For black systems:

- HP Engage One Pro G2 AiO Slim VESA Mount (1A4E7AA)
- HP Engage One Pro G2 AiO VESA Hub (9YH42AA)

For white systems:

- HP Engage One Pro G2 AiO Slim VESA Mount White (326R7AA)
- HP Engage One Pro G2 AiO VESA Hub White (326R6AA)

Certifications:

- IEC 62368-1:2014
- UL 62368-1, 2nd Ed. And CAN/CSA C22.2 No. 62368-1-14, 2nd Ed.

Compliant with:

- EN 62368-1:2014/ A11:2017
- BS EN 62368-1:2014/ A11:2017

Service and Support

Three (3) year limited warranty with advance exchange when purchased from HP.

General		
	Lift (Height Adjust) in Landscape Mode	5" (13 cm)
	Lift (Height Adjust) in Portrait Mode	2.5" (6.4 cm)
	Weight Capacity	16-36 lb (7.3-16.3 kg)
	Monitor up/down tilt	Up to +25°/ -5° (depends on the height)
	Pan	360°
Mechanical		
	Product Weight	13.8 lb (6.2 kg)
	Product Dimensions	20.4" x 11.5" x 17.6" (51.8 cm x 29.2 cm x 44.8 cm)

HP Engage One After Market Option Matrix

Shipping Weight	17.4 lb (7.9 kg)
Shipping Dimensions	23" x 13" x 7.3" (58.5 cm x 33.0 cm x 18.5 cm)

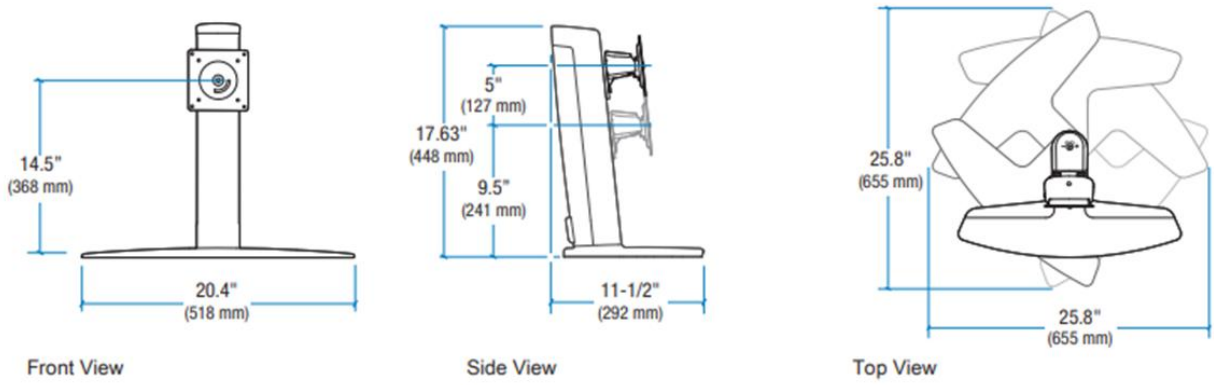

Box Contents

Base, stand, monitor mounting bracket, screws, weight adjustment tool, cable ties, quick-setup manual

HP Engage 6.9 inch Customer Facing Display



Model

HP Engage 6.9 inch Customer Facing Display	B11G3AA
HP Engage 6.9 inch Customer Facing Display White	B11G4AA

HP Engage One After Market Option Matrix

Introduction

Give customers a clear view of their transactions and sharing engaging, colorful, dynamic content at the point of sale with LCD touch display.

Key Benefits

- 6.9 inch diagonal compact LCD display that integrates easily into your retail solution.
- Position as need with adjustable height and swiveling of the display head.
- Place the durable, dust resistant display in a range of high traffic areas.
- A USB connector powers the display and eliminated the need for additional cabling.
- The edge to edge, bezel free 63 esign is easy to clean, helps protection from dust, and create a sleek, modern appearance.

Compatibility

The HP Engage 6.9 inch Customer Facing Display is compatible with HP Retail Point of Sale Systems.

Note: Not all Point of Sale system models are available in all regions.

Service and Support

Three (3) year limited warranty with advance exchange when purchased from HP.

Overview - After Market Options

General

Display Method	Backlit LED
Brightness	400 Nits
Resolution	1440 x 720
Pixel Pitch	0.105 x 0.105 mm
Active Area	75.6 (H) x 151.2 (V) mm
Contrast Ratio	1000:1 (max)
Response Rate	25 ms (rise+fall time)
Viewing Angle	Left: 85° Right: 85° Top: 85° Bottom: 85°
Color Gamut	70% (CIE 1931 Standard NTSC)

Mechanical

Display Dimensions (WxHxD)	171.4 x 76.2 x 56.35 mm
Display Weight	0.25 kg
Hinge Adjustability	Rotation Range 0°~90° (normal using) Folded to 90° for shipping
Color	HP Black / White

Connection

Interface	USB

Power

Operating Voltage	5V
Full Load Current	6.5W (DC +5V, 1300mA)
Idle Current 0.64W	TBD

Temperature Range

Operating	0°C to 35°C [32 to 95°F] at 10% to 90% humidity (non-condensing)
Non-operating	-30°C to 65°C [-22 to 149°F] at 0% to 95% humidity (38.7°C maximum wet bulb temperature)
Webcam	30fps USB 2.0 webcam, 5MP (2560x1920) resolution **Note:** The Integrated webcam is a windows Hello Camera and IR is supported on 5MP Camera

Operating System

Compatible with:	Windows 11 Pro 64-bit Windows 10 Professional 64-bit) Windows 10 IoT Enterprise 2021 LTSC Windows 10 IoT Enterprise 2019 LTSC Android™ 11 Android™ 11 AOSP Android™ 11 GMS FreeDos 2.0 SUSE Linux® Enterprise Server 15

Kit Contents

HP Engage 6.9 inch Customer Facing Display, documentation, warranty card.

Overview - After Market Options

HP Engage One Pro G2 Integrated Barcode Scanner



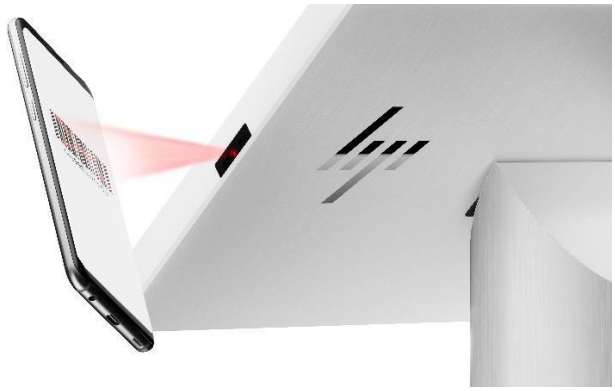

Model

HP Engage One Pro G2 Integrated Barcode Scanner Configure to Order (CTO) with HP Engage	B3WY5AV (bottom), B3WY8AV (left), B3WZ0AV (right)
HP Engage One Pro G2 Integrated Barcode Scanner After-market option (AMO)	B6BP1AA

Introduction

This integrated scanner streamlines your checkout area, while offering placement options, acceptance of various barcodes and coupons, and enhanced features for an easier, more accessible checkout experience.

Key Features and Benefits

- Enjoy a configurable, clutter-free scanning space. Our new integrated barcode scanner inserts into the left, right, or bottom of the HP Engage One Pro G1 AiO or HP Engage One Pro G2 AiO for a sleek, seamless look.
- Quickly scan mobile wallets and digital coupons from customer mobile devices or printed 1D and 2D barcodes, or validate customer identity with passport OCR.
- Enable both employees and customers alike to scan items with ease. The unit reads barcodes when they're placed within 1.2" to 18.5" *inches from the scanner.
- Minimize fatigue by adjusting the scan light for your ambient lighting conditions— lower the brightness in darker environments and increase in brighter environments.
- Choose to have the barcode scanner included when you purchase your HP Engage One Pro G2 AiO, or add it on later as you need the upgrade. **
- The HP Engage One Pro G2 AiO flip- sensing feature will turn off the LED when the head unit is flipped.
- Enjoy support for your retail operating system of choice. The HP Engage One Pro G2 Integrated Barcode Scanner supports Windows 11, Windows 10, Windows IoT, Linux®, and Android-based systems.
- Rest easy that your IT investment is supported by a three- year standard limited warranty.

*Min/max reading distance vary for different symbologies/densities.
**Optional feature sold separately or as an add-on feature.

Compatibility

Overview - After Market Options

The HP Engage One Pro G2 Integrated Scanner is compatible with the HP Engage One Pro All-in-One system and the HP Engage One Pro G2 All-in-One system.

Note: Not all Point of Sale systems are available in all regions.

Service and Support

Three (3) year limited warranty with advance exchange when purchased from HP.

General

Image Sensor	1200 x 800 CMOS
Illumination Aimer	White LED Red LED 625± 10nm

Depth of Field

Typical Performance *

Symbologies	Depth of Field
EAN-13	50mm-470mm (13mil)
Code39	55mm-260mm (5mil)
PDF-417	60mm-190mm (6.7mil)
Data Matrix	43mm-240mm (10mil)
QR Code	30mm-320mm (15mil)

Symbol Contrast	25% minimum reflectance
Roll (tilt)	360°
Pitch	±60°
Skew	±60°
Field of View	Horizontal 47°, Vertical 30°
1D decode symbologies	Autodiscriminates all standard 1D codes including GS1 DataBar™ linear codes. AIM 128 China Post 25 Codabar Code 11 Code 39 Code 49 Code 93 Code 128 Code 16K Coupon EAN-8 EAN-13 Febraban GS1-128 (UCC/EAN-128) GS1 Composite (EAN UCC Composite) GS1 Databar (RSS) Industrial 25 Interleaved 2 of 5 ISBN ISBT 128 ISSN ITF-6 ITF-14 Matrix 25 MSI-Plessey

Overview - After Market Options

	Plessey Standard 25 UPC-A UPC-E
2D decode symbologies	Aztec Code Chinese Sensible Code Code One Data Matrix GM Code MaxiCode MicroPDF417 Micro QR Code PDF417 QR Code
Postal decode symbologies	Australian Post KIX Post Royal Mail USPS Intelligent Mail USPS Planet USPS Postnet
OCR symbologies	Passport OCR
Mechanical	
Dimensions (W xD x H)	30.7 x 45.0 x 10.1 mm (Maximum)
Weight	9.6g
Color	Black
Interface/Connection	
Interface	USB
Temperature	
Operating	-20°C to 40°C (-4°F to 104°F)
Storage	-40°C to 70°F (-40°F to 158°F)
Humidity (non-condensing)	5% to 95%
Power	
Operating Voltage	5VDC±5%
Current at 5VDC	Operating: 300mA (RMS typical), 450mA (RMS max.) Idle: <50mA (level mode), <135mA (sense mode) Sleep: <1.5mA
Rated Power Consumption	1.5 W Typical
Drivers	Windows USB HID-KB and OPOS & JPOS (via USB-COM mode drivers)
Ambient Light	0- 100,000 lux
Water Penetration Protection	IP44
Operating System	
Compatible with:	**Windows** Windows 11 Windows 10 Pro 64bit Windows 10 IoT Enterprise 2016 LTSB 64bit (RS1) Windows 10 IoT Enterprise 2019 LTSC 64bit (RS5) **Linux**

Red Hat/CentOS 5.6.8 and above (64 bit)
Suse Linux Enterprise 11/12 SP3 and above (64 bit)
Ubuntu 12.04/14.04 LTS and above (64 bit)

Android
Android 8.0 and above

Agency Certifications

FCC Part15, Class B, CE EMC Class B, IEC62471, RoHS, IEC 62368-1, AfPS GS 2019, EK1-ITB 2000, UL, CNS13438

AMO Kit Contents

HP Engage One Pro G2 Integrated Barcode Scanner, documentation, warranty card

HP Engage One Magnetic Stripe Reader





Model

HP Engage One Pro G2 Magnetic Stripe Reader	2U551AA
HP Engage One Pro G2 White Magnetic Stripe Reader	2V9G4AA

Compatibility

The HP Engage One Pro G2 Magnetic Stripe Reader is compatible with the HP Engage One Pro G2 All-in-One System.

NOTE: Not all Point of Sale system models are available in all regions.

Service and Support

Three (3) year limited warranty with advance exchange when purchased from HP.

Overview - After Market Options

General

Magnetic stripe formats	ISO 7811, AAMVA
Card Thickness	0.38 to 1.14 mm (0.015 to 0.045 in)
Indicators	Bi-colored LED, beeper (requires system audio driver)
Card Speed	3 to 75 ips (7.6 to 190.5 cm/s)

Mechanical

Weight	5.67 g
Slot width	1.14 mm (0.045 in)
Color	HP Black HP White

Connection

Interface	Eight-pin male Molex 51021-0800
Cable Length	125 ± 6.4 mm

Power

Power Supply	3.0 to 3.6 VDC
I/O Voltage Range	2.7 to 3.6 VDC
Active Power Supply Current	5
mA Standby Power Supply Current	0.03 mA

Temperature Range

Operating	0°C to 55°C
Relative Humidity	-10% to 90% non-condensing

Reliability

Operating Life	1,000,000 card swipes minimum

Agency Certifications

FCC, CE, USB-IF

Operating Systems

Compatible with:	Windows 11 Pro 64-bit Windows 10 Professional (64-bit) Windows 10 IoT Enterprise 2021 LTSC Windows 10 IoT Enterprise 2019 LTSC Android™ 11 Android™ 11 AOSP Android™ 11 GMS FreeDOS 2.0 SUSE Linux® Enterprise Server 15

Kit Contents

HP Engage One Pro G2 Magnetic Stripe Reader, documentation, warranty card.

HP Engage One Pro G2 Fingerprint Reader



Model

HP Engage One Pro G2 Fingerprint Reader	9YH50AA

Compatibility

The HP Engage One Pro G2 Fingerprint Reader is compatible with the HP Engage One Pro G2 All-in-One System.

Service and Support

Three (3) year limited warranty with advance exchange when purchased from HP.

Overview - After Market Options

General

Sensor Type	Capacitive
Array Size	208 x 288 pixels
Image Resolution	508 DPI
Gray Scale	8-bit (256 levels)

Mechanical

Image Area	10.4 x 14.4 mm
Image/Coating	Steel Coat
Color	HP Black

Digital ID Reliability

NVM Storage	100 templates
Data Retention	20 years
Erase/Write	100,000 cycles

Interface/Connection

Interface	USB 2.0
Interface Connector	5 pin, 0.8mm pitch wire-type (gold-plated)

Temperature

Operating	-30° to +85°C
Storage	-40° to +85°C
Humidity (non-condensing)	5% to 85%
ESD Tolerance	IEC 61000-4-2 Level 4

Power

Consumption	Supply voltage: single supply voltage, 3.0V to 3.6V Imaging mode : 105 mA @ 3.3V Sleep mode : 1350 uA @ 3.3V
Wake-up Time	< 15 ms (Sleep to imaging)

Drivers

Windows USB HID-KB and OPOS & JPOS (via USB-COM mode drivers)

Operating Systems

Compatible with:	Windows 11 Pro 64-bit Windows 10 Professional (64-bit) Windows 10 IoT Enterprise 2021 LTSC Windows 10 IoT Enterprise 2019 LTSC Android™ 11 Android™ 11 AOSP Android™ 11 GMS FreeDOS 2.0 SUSE Linux® Enterprise Server 15

Agency Certifications

FCC (47 CFR) Part 15C, Section 15.247 & 15.249

Kit Contents

HP Engage One Pro G2 Fingerprint Reader, documentation, warranty card.

Overview - After Market Options

Service and Support

Ninety-day (90-90-90), one-year (1-1-1), and three-year (3-3-3) limited warranty delivers (ninety days/one year/three years) of on-site, next business day[2] service for parts and labor and complimentary limited technical support.[3] Three-year onsite and labor are not available in all countries. Service offers terms up to 5 years by choosing an optional HP Care Pack.[1] To choose the right level of service for your HP product, visit HP Care Pack Central: http://http://www.hp.com/go/cpc

NOTES:

1. Terms and conditions may vary by country. Certain restrictions and exclusions apply. Other warranty variations may be offered in your region.
2. On-site service may be provided pursuant to a service contract between HP and an authorized HP third-party provider, and is not available in certain countries. Global service response times are based on commercially reasonable best effort and may vary by country.
3. Technical support applies only to HP-configured Compaq and third-party HP-qualified hardware and software. 24 x 7 support may not be available in some countries.

At A Glance: HP Engage Express (Stand only)

- Color: Ebony Black
- AMO Stand Options:
  - HP Engage Express Countertop Stand
  - HP Engage Express Pedestal Stand
    NOTE: HP Engage Express Pedestal Stand must be bolted to the floor, bolts not included.
- AMO Add-on Options:
  - HP Engage Countertop Barcode Scanner Cradle
  - HP Engage Express Shelves
  - HP Engage Express Bag Holder
  - HP Engage Express Universal Payment Arm
  - HP Engage Express Side Payment Arm
  - HP Engage Express Countertop Mount
    NOTE: Refer to disclaimers in product sections
- Head Unit Compatibility: HP Engage One Pro All-in-One with Pro VESA® Hub
- Peripheral Options
  - Payment Arm with 75mm VESA®
  - Custom Modus3 Printer (Integrated)
  - HP Engage 2D G2 Barcode Scanner
  - Datalogic Magellan 1500i Presentation Scanner (Integrated)
    NOTE: Datalogic Magellan 1500i Presentation Scanner is only compatible with Pedestal stand. The Custom Modus3 Printer is factory installed only and must be configured at purchase.
- Optional Payment & Payment Mounts
  - HP Engage Express Universal Payment Arm
  - HP Engage Express Side Payment Arm
- **NOTE:** HP Engage Express Universal Payment Arm and HP Engage Express Side Payment Arm require a payment backplate to connect to a payment terminal. Payment backplate and payment terminal are not included. You must choose an HP Engage Express Countertop or Pedestal Stand enabled for payment at purchase; otherwise, the Universal Payment Arm and Side Payment Arm will not connect to the stand.
- HP Engage Express Mini Hub
  NOTE: HP Engage Mini Hub is included in HP Engage Express Countertop and Pedestal Stands.
  NOTE: If a USB peripheral needs more than 5V of power, use the 12V or 24V Powered USB ports in the Pro VESA Hub rather than the USB-A ports in the Mini Hub. Power voltage threshold may vary depending on the

peripheral.

- 3 Year Onsite Warranty for HP Engage Express After Market Options except for select AMOs

  NOTE: HP Engage Express Shelves, HP Engage Express Bag holder, and HP Engage Express Countertop Mount have 3-year advanced exchange.

At a Glance: Compatibility with HP Engage One Pro All-in-One Head Unit

- Color: Ebony Black
- Choice of two orientations: landscape & portrait
  - Landscape offers the option with or without camera
- Choice of three long- lifecycle performance All-in-One (AiO) Retail Systems:
  - 15.6" diagonal, FHD (1920 x 1080), touch, IPS, UWVA, anti-glare, 400 nits, 45% NTSC
  - 19.5" diagonal, FHD (1920 x 1080), touch, VA, UWVA, anti-glare, 450 nits, 72% NTSC
  - 23.8" diagonal, FHD (1920 x 1080), touch, IPS, UWVA, anti-glare, 625 nits, 72% NTSC
    NOTE: Actual brightness will be lower with touch screen
- Processor choices (Intel® Q470E chipset, 65W Processors):
  - 10th Generation Intel® Core™ i9, i7, i5, & i3 processors
  - Intel® Pentium® and Celeron® processors
- Intel® Wi-Fi 6 AX201 (2x2) and Bluetooth® 5 combo, non-vPro® Intel® Wi-Fi 6 AX201 (2x2) and Bluetooth® 5 combo, vPro® Intel® Wi-Fi 6 + Bluetooth® 5 (802.11AX 2x2) *
  *Wireless access point and Internet service required and sold separately. Availability of public wireless access points limited. Wi-Fi 6 (802.11ax) is backwards compatible with prior 802.11 specs.
- 1 VESA® Hub
  - HP Engage One Pro VESA Hub**
    NOTE: Must configure HP Engage One Pro with Pro VESA® Hub for compatibility with HP Engage Express. Includes 230W power adapter.
- Integrated peripheral options
  - HP Engage Indicator Light
  - HP Engage One Pro Barcode Scanner (choose between three locations: left, right, bottom) of the head unit
  - HP Engage One Pro MSR
  - HP Engage One Pro Fingerprint Reader

  NOTE: The Engage 6.6-inch Customer Facing Display integrated peripheral option on HP Engage One Pro is not compatible with HP Engage Express. HP Engage Indicator Light is an optional peripheral that requires factory installation and must be configured at the HP Engage One Pro AiO purchase.
- Intel WLAN Option
- HP Engage One Pro All-in-One Head Unit Standard Warranty Options – 90/90/90, 1/1/1, 3/3/3; Optional Care Packs available
- (2) Two DDR4 Memory Slots (64 Gb Maximum)
- 64 GB DDR4-3200 SDRAM Transfer rates up to 3200 MT/s.
- 2 SODIMM Memory slots
  - 128 GB to up to 1 TB PCIe® NVMe™ SSD
  - 256 GB to up to 512 GB PCIe® NVMe™ SS
- Integrated HD audio with Realtek ALC3247 codec with standards internal speakers and stereo headphone jack, 2W

For more information & disclaimers on HP Engage One Pro, reference the HP Engage One Pro AiO QuickSpecs.

NOTE: See important legal disclosures for all listed specs in their respective features sections.

HP Engage Express

Countertop



Pedestal



HP Engage Express Countertop

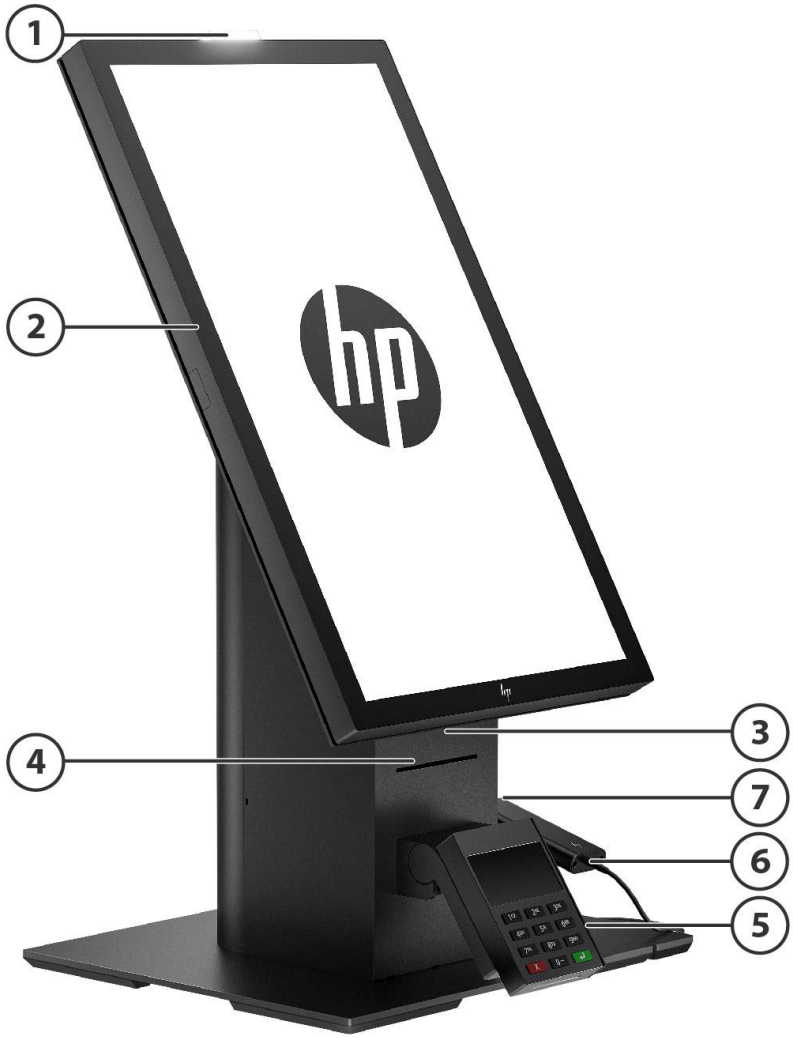

1. Indicator Light
2. HP Engage One Pro AiO Head Unit
3. Printer Drawer Pin Hole[1]
4. Custom Modus 3 Printer[2]
5. Front Payment Connector
6. HP Engage Express Countertop Barcode Scanner Cradle
7. HP Engage 2D G2 Barcode Scanner

Note: Shown is HP Engage Express Countertop 4 (6P2E5AA), HP Engage Express Countertop Barcode Scanner Cradle (includes HP Engage 2D G2 Barcode Scanner) (6P2F9AA).
[1]Metal pin comes with HP Engage Countertop in Printer configuration only and the metal pin is used to open printer drawer.
[2] Printer is factory installation only and must be configured at purchase.
The optional HP Engage Express Universal Payment Arm is available for generic payment terminals on this kiosk. It requires a Havis payment backplate, sold separately, to connect to a payment terminal. Payment terminal not included. Must choose an HP Engage Express Countertop or Pedestal Stand enabled for front payment at purchase or the HP Engage Express Universal Payment Arm will not connect to the stand. Please contact your Sales representative for more details.

Custom Modus 3 Printer

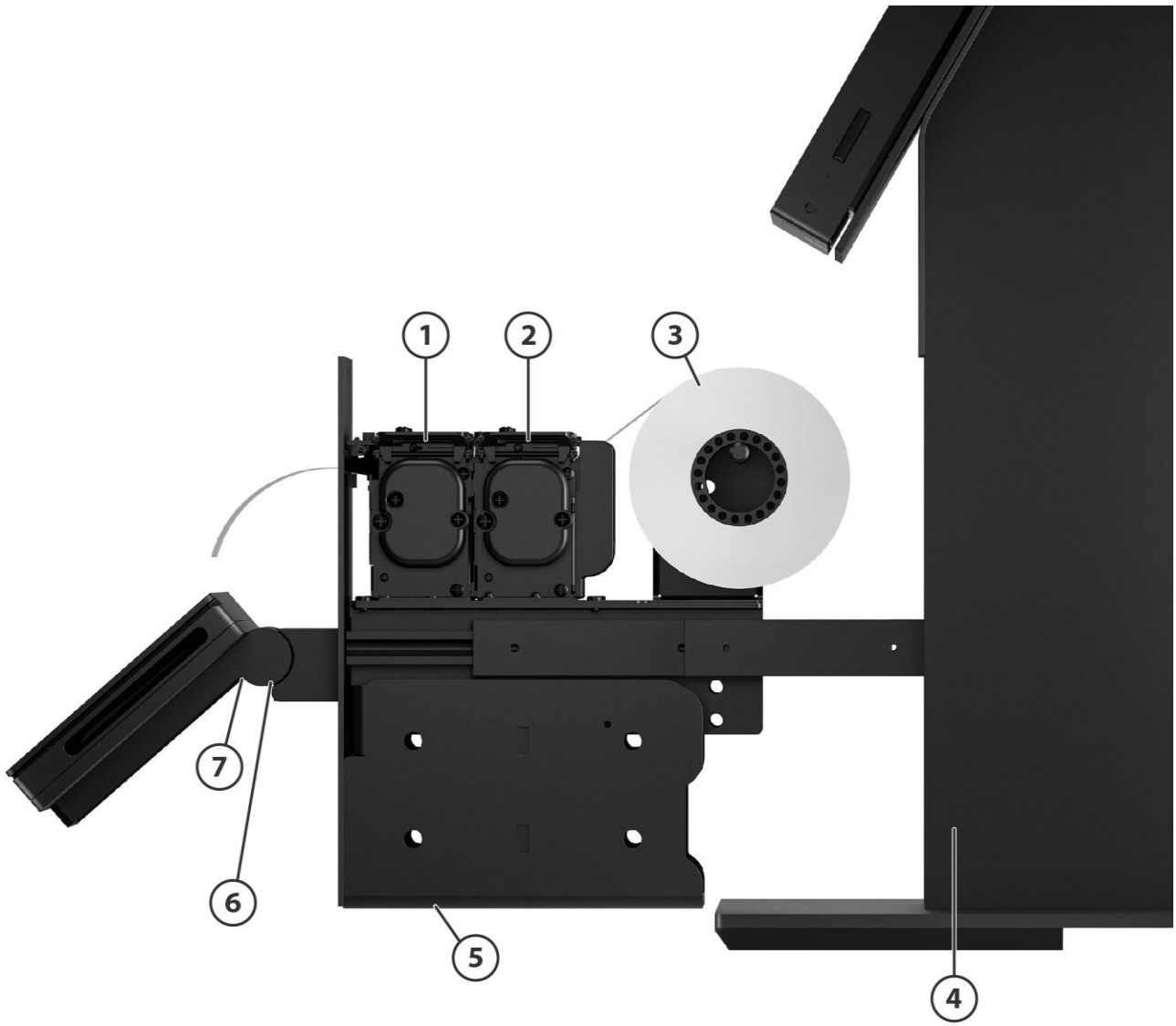

1. Printer Presenter[1]
2. Custom Modus 3 Printer[2]
3. Receipt Paper
4. HP Engage Express Countertop
5. Front Printer Drawer[2]
6. Payment Connector[4]
7. 75mm VESA

[1]Helps to prevent jamming of printer receipt paper.
[2]Custom Modus3 Printer is factory installed only and must be configured at purchase.
The optional HP Engage Express Universal Payment Arm is available for generic payment terminals. It requires a Havis payment backplate, sold separately, to connect to a payment terminal. Payment terminal not included. Must choose an HP Engage Express Countertop or Pedestal Stand enabled for front payment at purchase or the HP Engage Express Universal Payment Arm will not connect to the stand. Please contact your Sales representative for more details.

HP Engage Express Pedestal

Overview - After Market Options

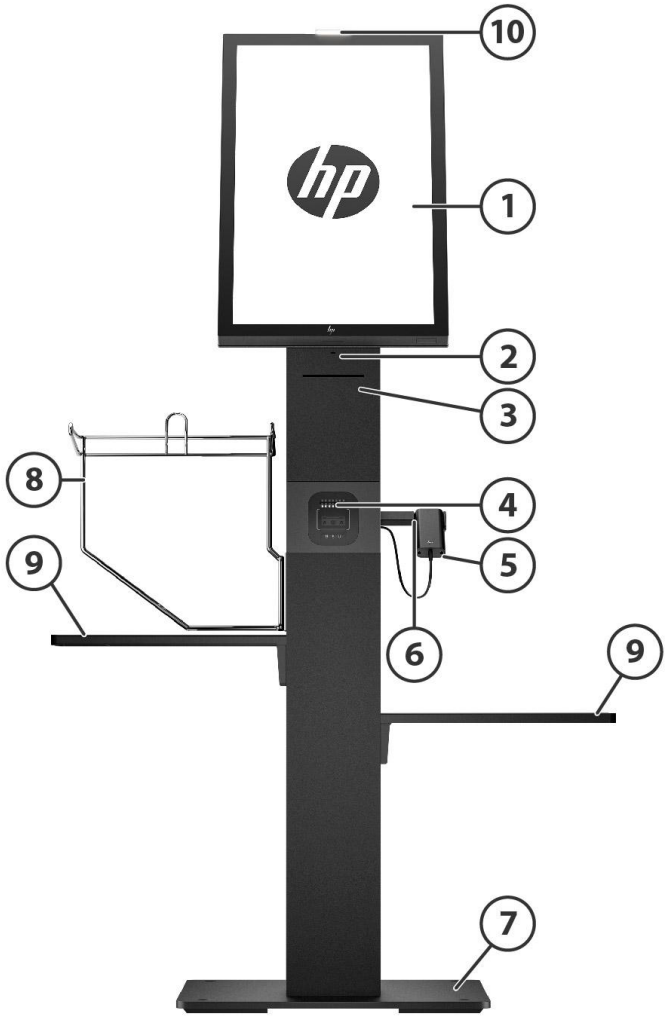

1. HP Engage One Pro AiO Head Unit
2. Printer Drawer Pin Hole[1]
3. Custom Modus 3 Printer[2]
4. Datalogic Magellan 1500i Presentation Scanner[4]
5. HP Engage 2D G2 Barcode Scanner
6. HP Engage Express Pedestal Barcode Scanner Cradle
7. HP Engage Express Pedestal Base Plate holes for mounting x4[3]
8. HP Engage Express Bag Holder
9. HP Engage Express Shelves
10. Indicator light

[1]Metal pin comes with HP Engage Express Printer configurations only and is used to open printer drawer.
[2]Custom Modus3 Printer is factory installed only and must be configured at purchase.
[3]HP Engage Express Pedestal Stand must be bolted to the floor, mounting bolts are not included.
[4]The Datalogic Magellan 1500i Presentation Scanner is factory- installed only and must be configured at purchase.

Rear View

HP Engage Express VESA® hub	
1. 1x RJ-45 Port	4. 1x Powered USB 12V Port
2. 1x DC Power Connector	5. 1x USB-C
3. 1x Powered USB 24V Port	6. 3x USB-A 3.2

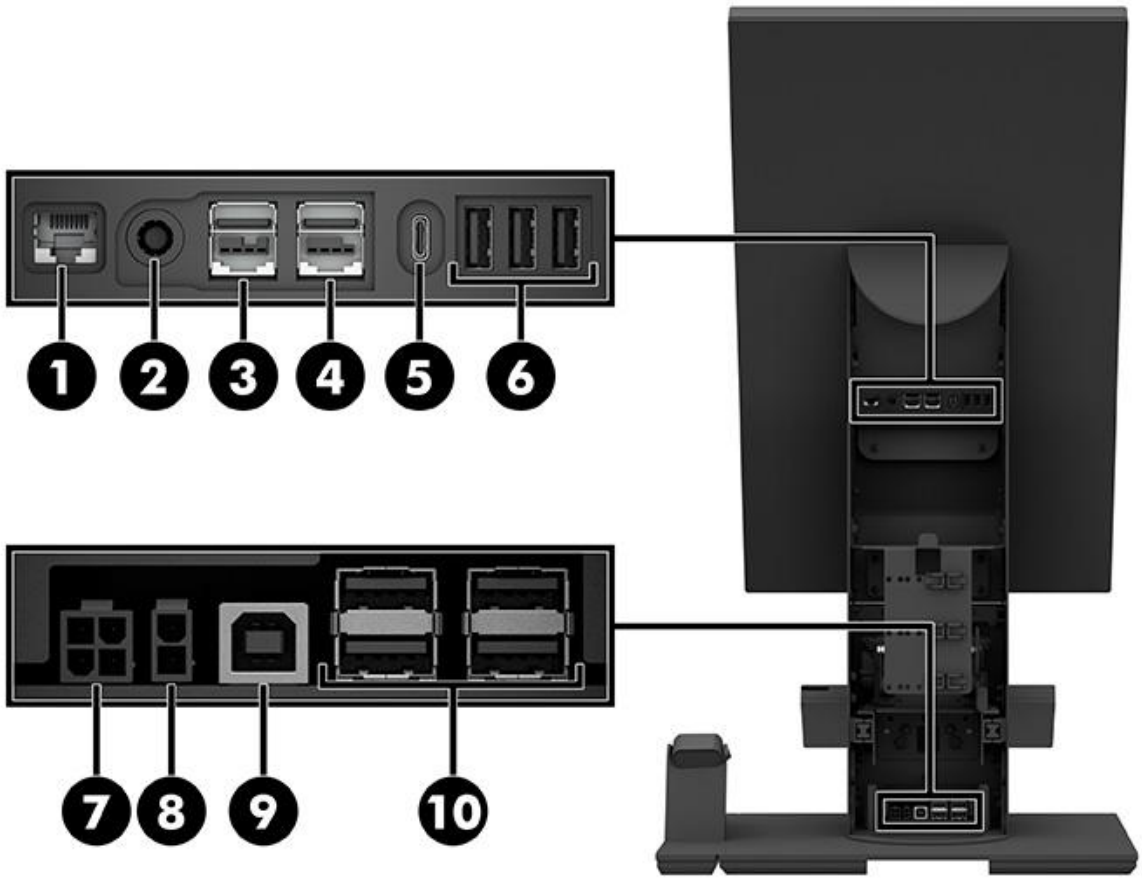

HP Engage Mini Hub	
7. 1x 4-Pin Power Connector (Power source for Pro VESA® hub)	9. 1x USB-B (USB-A extension from VESA® Hub)
8. 1x 2-Pin Power Connector (Power source for Printer)	10. 4x USB-A 2.0

Note: HP Engage One Pro VESA® hub can be configured with HP Engage One Pro AiO for compatibility with all HP Engage Express Countertop or Pedestal Stands.

Overview - After Market Options

HP Engage One Pro Hubless VESA for the HP Engage One Pro AiO is ONLY compatible with HP Engage Express Countertop or Pedestal Stands without a printer (Countertop SKUs 1 & 2; Pedestal SKUs 5 & 6).
HP Engage Mini Hub is included in HP Engage Express Countertop and Pedestal Stands.
Note: If a USB peripheral needs more than 5V of power, use the 12V or 24V Powered USB ports in the Pro VESA Hub rather than the USB-A ports in the Mini Hub. Power voltage threshold may vary depending on the peripheral.

HP Engage Express Countertop Barcode Scanner Cradle



- The HP Engage Express Countertop Barcode Scanner Cradle includes the HP Engage 2D G2 Barcode Scanner.
- The HP Engage Express Countertop Barcode Scanner Cradle is purchased separately from HP Engage Express Countertop Stands.
- It can be installed on the right or left side of the countertop stand.

Note: HP Engage Express Countertop Barcode Scanner Cradle is only compatible with HP Engage Express Countertop Stands.

HP Engage Express Countertop Mount

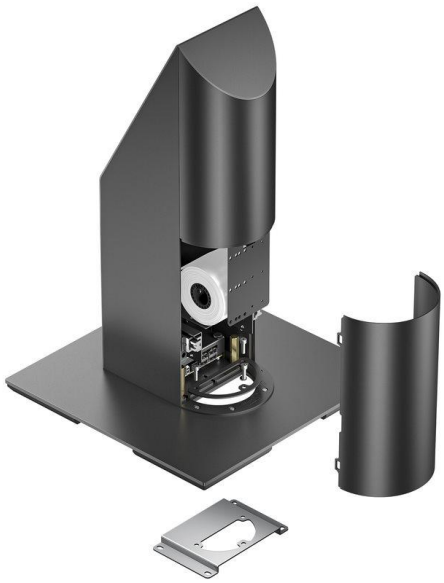

- The HP Engage Express Countertop Mount is sold separately.
- The 4 screws to connect the countertop mount to a surface are not included.

Note: HP Engage Express Countertop Mount is only compatible with HP Engage Express Countertop Stands.

HP Engage Express Universal Payment Arm



- The HP Engage Express Universal Payment Arm (7Y397AA) is optional and sold separately. It is only compatible with HP Engage Express Countertop SKUs 2 and 4 and HP Engage Express Pedestal SKUs 6, 8, and 9.
- To secure the payment terminal to the third- party payment backplate and the Universal Payment Arm, a key mechanism is included with the HP Engage Express Universal Payment Arm for extra security.
- Dimensions: 7.61" (L) x 3.50" (W) x 2.39" (H)/ 19.3 cm (L) x 8.9 cm (W) x 6.1 cm (H)

Overview - After Market Options

Note: The HP Engage Express Universal Payment Arm is available for generic payment terminals on select kiosk SKUs. It requires a Havis payment backplate, sold separately, to connect to a payment terminal. Payment terminal not included. Must choose an HP Engage Express Countertop or Pedestal Stand enabled for front payment at purchase or the HP Engage Express Universal Payment Arm will not connect to the stand.

HP Engage Express Side Payment Arm



- The HP Engage Express Side Payment Arm (9Y3Q8AA) is optional and sold separately. It is only compatible with HP Engage Express Countertop SKUs 1 and 3 and HP Engage Express Pedestal SKUs 5, 7, 10, 11, and 12.
- Side Payment Arm Dimensions: 12.7" (L) x 8.5" (W) x 3.7" (H)/ 32.3 cm (L) x 21.6 cm (W) x 9.3 cm (H)
- The shipping weight is 3.5 lb
- Compatibility limitations:
  - Not compatible with 23.8" landscape.
  - Not compatible with 19.5" landscape with a payment terminal width that is greater than 3.3 in/ 85 mm.

Note: The HP Engage Express Side Payment Arm is available for generic payment terminals on select kiosk SKUs. It requires a Havis payment backplate, sold separately, to connect to a payment terminal. Payment terminal not included. Must choose an HP Engage Express Countertop or Pedestal Stand enabled for side payment at purchase or the HP Engage Express Side Payment Arm will not connect to the stand.

HP Engage Express Shelves & HP Engage Express Bag Holder

Overview - After Market Options

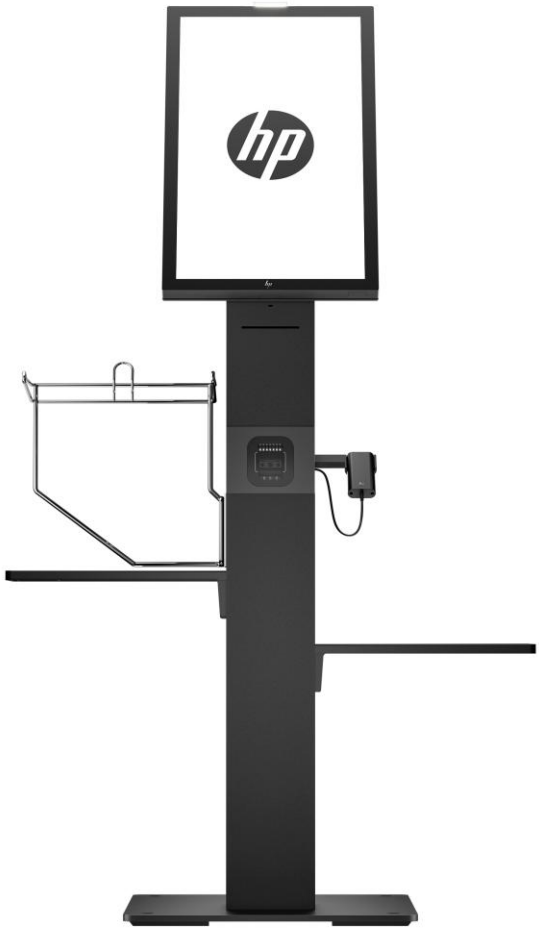

- The HP Engage Express Shelves and HP Engage Express Bag Holder are sold separately.
- HP Engage Express Bag Holder is left- sided. If a bag holder is used, a shelf must be purchased and placed underneath the bag holder to hold the weight of items placed in the bags. Shelves are not interchangeable and can be adjusted up or down on the pedestal stand. Maximum weight per shelf is 20 kg/44lb.

Note: HP Engage Express Shelves and bag holder are only compatible with HP Engage Express Pedestal Stands.

HP Engage Express AMO (Configurations)

AMO Number	AMO Name	AMO Description
6P2E2AA	HP Engage Express Countertop 1	Deliver maximum functionality in a small footprint design with the HP Engage Express Countertop Stand. This simple stand meets your essential self-service needs without additional peripherals. Compatible with side payment arm.
6P2E3AA	HP Engage Express Countertop 2	Deliver maximum functionality in a small footprint, self-service design with the HP Engage Express Countertop Stand with included front payment connector. Sleek and streamlined, it is a versatile option that accommodates your choice of payment.[1]
6P2E4AA	HP Engage Express Countertop 3	Deliver maximum functionality in a small footprint, self-service design with the HP Engage Express Countertop Stand with included Custom Modus3 Printer.[2] The printer sleekly integrates into a front accessible drawer for easy maintenance. Compatible with side payment arm.
6P2E5AA	HP Engage Express Countertop 4	Deliver maximum functionality in a small footprint, self-service design with the HP Engage Express Countertop Stand with included front payment connector[1] and Custom Modus3 Printer.[2] The payment arm accommodates a variety of payment options, and the printer sleekly integrates into a front accessible drawer for easy maintenance.
6P2E7AA	HP Engage Express Pedestal 5	Enhance and streamline customer experiences with an elegantly crafted, highly versatile self-service stand. The HP Engage Express Pedestal Stand[3] delivers a sleek footprint and is ruggedly durable — meeting all your essential self-service needs. Compatible with side payment arm.
6P2E8AA	HP Engage Express Pedestal 6	Enhance and streamline customer experiences with the sleek HP Engage Express Pedestal Stand[3] with included front payment connector. It is elegantly crafted, ruggedly durable, and the payment arm accommodates a variety of payment options.[1]
6P2E9AA	HP Engage Express Pedestal 7	Enhance and streamline customer experiences with the sleek HP Engage Express Pedestal Stand[3] with included Custom Modus3 Printer[2]. It is elegantly crafted, ruggedly durable, and the printer cleanly integrates into a front accessible drawer for easy maintenance. Compatible with side payment arm.
6P2F0AA	HP Engage Express Pedestal 8	Enhance and streamline customer experiences with the elegantly crafted, ruggedly durable HP Engage Express Pedestal Stand[3] with included front payment connector[1] and Custom Modus3 Printer[2]. The payment arm accommodates a variety of payment options, and the printer sleekly integrates into a front accessible drawer for easy maintenance.
6P2F1AA	HP Engage Express Pedestal 9	Enhance and streamline customer experiences with the elegantly crafted, ruggedly durable HP Engage Express Pedestal Stand[3] with included front payment connector[1], Custom Modus3 Printer[2], and hand-held HP Engage 2D G2 Barcode Scanner. The payment arm accommodates a variety of payment options, the printer sleekly integrates into a front accessible drawer for easy maintenance, and the hand-held barcode scanner allows scanning of 1D and 2D omnidirectional barcodes as well as mobile device scanning.
6P2F2AA	HP Engage Express Pedestal 10	Enhance and streamline customer experiences with the elegantly crafted, ruggedly durable HP Engage Express Pedestal Stand[3], Custom Modus3 Printer[2], and Datalogic Magellan 1500i Presentation Scanner[4]. The payment arm accommodates a variety of payment options, and the printer sleekly integrates into a front accessible drawer for easy maintenance. The barcode scanner integrates into the stand for a seamless scanning solution. Compatible with side payment arm.
6P2F3AA	HP Engage Express Pedestal 11	Enhance and streamline customer experiences with the elegantly crafted, ruggedly durable HP Engage Express Pedestal Stand[3], Custom Modus3 Printer[2], integrated Datalogic Magellan 1500i Presentation Scanner[4], and hand-held HP Engage 2D G2 Barcode Scanner. It delivers maximum function in a modern, small footprint design to complement your environment. Compatible with side payment arm.
9Y3Q7AA	HP Engage Express Pedestal 12	Enhance and streamline customer experiences with the elegantly crafted, ruggedly durable HP Engage Express Pedestal Stand[3] with Custom Modus3 Printer[2] and hand-held HP Engage 2D G2 Barcode Scanner. The printer sleekly integrates into a front accessible drawer for easy maintenance and the hand-held barcode scanner allows scanning of 1D and 2D omnidirectional barcodes as well as mobile device scanning. Compatible with side payment arm.

HP Engage Express AMO (Add-Ons)

AMO Number	AMO Name	AMO Description
6P2F9AA	HP Engage Express Countertop BCS Cradle	Built for demanding environments, the HP Engage Express Countertop Barcode Scanner Cradle[5] provides an optimal place for your hand-held barcode scanner to rest while keeping counters clutter-free.
6P2G0AA	HP Engage Express Shelves	Add greater convenience to the self-checkout experience with HP Engage Express Shelves[6] for the HP Engage Express Pedestal Stand.[3] One right shelf and one left shelf are included.
6P2F7AA	HP Engage Express Bag Holder	Easy to use, the HP Engage Express Bag Holder[6] securely holds bags on the left side of the HP Engage Express Pedestal Stand[3] for quick and efficient checkout.

Overview - After Market Options

7P9E2AA	HP Engage Express Countertop Mount	Mount the HP Engage Express Countertop Stand to the counter for extra security.
7Y397AA	HP Engage Express Universal Payment Arm	Universal Payment arm[7] that enables a variety of payment terminals to connect to the front of HP Engage Express Countertop and Pedestal Stands.
9Y3Q8AA	HP Engage Express Side Payment Arm	Side Payment arm[9] that enables a variety of payment terminals to connect to the side of the screen of the HP Engage Express Countertop and Pedestal Stands.

Disclaimers:

1. The Custom Modus3 Printer is factory install only and must be configured at purchase.
2. HP Engage Express Pedestal Stand must be bolted to the floor, bolts not included.
3. The Datalogic Magellan 1500i Presentation Scanner is factory install only and must be configured at purchase.
4. HP Engage Express Countertop Cradle includes the HP Engage 2D G2 Barcode Scanner and is only compatible with the HP Engage Express Countertop Stand.
5. HP Engage Express Shelves and HP Engage Express Bag Holder are only compatible with the HP Engage Express Pedestal Stand. Maximum weight per shelf is 20 kgs/44lbs.
6. HP Engage Express Universal Payment Arm requires a payment backplate to connect to a payment terminal. Payment backplate and payment terminal are not included. Must choose an HP Engage Express Countertop or Pedestal Stand enabled for payment at purchase or the Universal Payment Arm will not connect to the stand.
7. HP Engage Express Side Payment Arm requires a payment backplate to connect to a payment terminal. Payment backplate and payment terminal are not included. Must choose an HP Engage Express Countertop or Pedestal Stand enabled for side payment at purchase or the side payment arm will not connect to the stand.

Overview - After Market Options

PORTS

HP Engage One Pro Pro VESA® Hub I/O:

- 1x 140W data port (PDO cable to Head Unit)[1]
- 1x RJ45 vPro NIC
- 1x UAJ (Audio jack)
- 4x Integrated USB-A Gen1 Peripherals ports
- 2x USB3.2 G1 Type-A / 900mA
- 2x USB3.2 G1 Type-A / 2.2A

HP Engage Express Mini hub I/O:

- 1x 4 Pin Power Connector (Power source for Pro VESA® hub)
- 1x 2 Pin Power Connector (Power source for Printer)
- 1x USB-B (USB-A extension from VESA® Hub)
- 4x USB-A 2.0

Note: HP Engage Mini Hub is included in HP Engage Express Countertop and Pedestal Stands. Pro VESA® Hub must be configured on the HP Engage One Pro to work with HP Engage Express Stands.

Note: If a USB peripheral needs more than 5V of power, use the 12V or 24V Powered USB ports in the Pro VESA Hub rather than the USB-A ports in the Mini Hub. Power voltage threshold may vary depending on the peripheral.

USB SPECIFICATION

Speed	Terminology
Hi-Speed USB 480Mbps signaling rate	USB 2.0
SuperSpeed USB 5Gbps signaling rate	USB 3.2 Gen 1

Integrated Custom Modus 3 Printer

General

Supported Character Set/ Resident Code Pages:

290 Japanese/ Katakana
437 US
720 Arabic
737 Greek
850 Multi-lingual
852 Slavic
855 Cyrillic
857 Turkish
858 with Eurosymbol
860 Portuguese
862 Hebrew
863 French Canadian
864 Arabic
865 Nordic
866 Cyrillic
932 Japanese
949 Korean - Hangul
1125 Ukrainian
1250 Latin
1251 Cyrillic

Overview - After Market Options

1252 Windows Latin I
1253 Greek
1254 Turkish
1255 Hebrew
1256 Arabic
1257 Baltic
1258 Vietnamese
GB18030 Chinese (Simplified & Traditional)
ISO8859-2 Latin 2
KU42 Thai
Unicode support for resident fonts/ Code Pages

Bar Codes	1D: UPC-A, UPC-E, EAN 8, EAN 13, EAN 128, Code 39, Code 93, Code 128 Parsed, Codabar, ITF 2D: QR Code, DataMatrix, PDF417
Print Method	Direct Thermal
Printing Speed	Up to 120 mm/sec
Printer Sensor	Head temperature, paper presence, black mark, cover open, low paper
Resolution	203 DPI
Roll Width	80 mm
Print Width	76 mm
Flash Memory	2 MB
RAM	640 KB
Knife	Full cut only (remove partial cut because HP Engage Express without presenter module is not available)
Receipt-Columns	44/56 (80mm paper roll)
Paper Type	Thermal Paper
Roll Core Diameter	25 mm
Paper size	Page Mode: Fixed paper size (3", 8", 16", 22", 36", or 157") Non- page Mode: Paper cut occurs at the end of the document
Estimated life	1,000,000 cuts
External roll diameter	80mm max.
Cash drawer	Not supported
Knife cuts	1,000,000 cuts
Print head life	150 km or 100 M pulse durability
Interface	USB2.0 type-A
Operating voltage	19.5V
Current consumption	0.8A
Standby consumption	0.03A

Environmental Conditions

Operating temperature	-20°C to 70°C
Relative humidity	10% to 85% (w/o condensation)
Storage temperature	-20°C to 70°C

Overview - After Market Options

Storage relative humidity	10% to 90% (w/o condensation)

Drivers

Windows, OPOS, JPOS, Android, Linux

Operating System

Compatible with:

Windows

- Windows 11 Pro 64-bit
- Windows 10 Pro 64-bit
- Windows 10 IoT Enterprise 2019 LTSC 64-bit (RS5-based)
- Windows 10 IoT Enterprise 2016 LTSB 64-bit (RS1-based)

Linux

- CentOS: 8.4.2105-x86_64
- Fedora: Workstation-Live-x86_64-34-1.2
- OpenSUSE: Leap-15.3-DVD-x86_64
- SUSE Linux: 12-SP5-Server-DVD-x86_64-GM-DVD1, SUSE Linux-15-SP2-Full-x86_64, SUSE Linux 15-SP3-Full-x86_64
- Ubuntu: 18.04.5-desktop-amd64, ubuntu-20.04.2.0-desktop-amd64, ubuntu-mate-20.04.2.0-desktop-amd64

Android

- HP Android 11.0 (HP Engage One Pro AiO)

Overview - After Market Options

HP Engage 2D G2 Barcode Scanner



Model

HP Engage 2D G2 Barcode Scanner (Black)

Introduction

Deliver an efficient customer experience with the reliable, versatile, and efficient HP Engage 2D G2 Barcode Scanner, HP's smallest, slimmest barcode scanner. It reads mobile wallets, digital coupons, and printed barcodes, and can be used by hand or in presentation mode.

Key Features and Benefits

- Quickly scan mobile wallets and digital coupons from customer mobile devices or printed 1D and 2D barcodes. Intuitive feedback confirms a successful read.
- Supports a wide variety of symbols, including 1D, 2D, and OCR.
- Built into an IP42-sealed and drop-resistant (1.2 m/ 3.94 ft) housing, can stand up to tough environments.
- User-friendly illumination and aiming: Employs highly- visible laser aimer to achieve crisp and accurate targeting while using flicker-free white soft illumination to reduce eye strain and fatigue from long-time operation.
- Powerful data formatting capability: Allows customizing scanned data with ease and provides supporting software to address diverse application needs.

Compatibility

The HP Engage 2D G2 Barcode Scanner is compatible with HP Retail & Industry Solutions systems.
NOTE: Not all Point of Sale system models are available in all regions.

Service and Support

Three (3) year limited warranty with advance exchange when purchased from HP. Additional HP Care Pack Services options are available to extend warranty coverage.

General

Scanner Technology	Global Shutter
Image Sensor	1280 x 800 CMOS
Light source/ illumination	White LED
Aiming	650 nm red laser diode
Read Rate	60 frames/second

Overview - After Market Options

Motion Tolerance 20 cm/second

Resolution >= 3 mil*

Field of View Horizontal: 47°; vertical: 30°

Typical Depth of Field Depth of Field distance determined by symbol length and scan angle. Printing resolution, contrast, and ambient light dependent.

*Test conditions: T=23℃; lllumination=3001ux using incandescent lamp; sample barcodes made by Newland.

Typical Performance *

Narrow Width	Depth of Field
Code 39	55 mm – 220 mm (5 mil)
Data Matrix	45 mm – 245 mm (10 mil)
EAN-13	45 mm – 450 mm (13 mil)
PDF417	55 mm – 195 mm (6.7 mm)
QR Code	20 mm – 320 mm (15 mil)

* Performance may be impacted by bar code quality and environmental conditions.

Min. Symbol Contrast 20% minimum reflectance difference*

*Test conditions: T=23℃; illumination=3001ux using incandescent lamp; sample barcodes made by Newland.

Scan Angle*

Roll (tilt) ± 360°

*Test conditions: Scan Distance= (min. DOF + max. DOF)/2; T=23℃; lllumination=3001ux using incandescent lamp; 2D: QR Code; 10 Bytes; Resolution=lSmil; PCS=0.8.

Pitch ± 55°

Skew ± 60°

Additional Features Data parsing (driver license parsing), data formatter

Symbologies

1D (Linear)

AIM 128
Codabar
Code 11
Code 39
Code 49
Code 93
Code 128
Code 16K
Coupon
EAN-8
EAN-13
Febraban
GS1-128 (UCC/ EAN-128)
GS1 Composite (EAN UCC Composite)
GS1 Databar (RSS)

	Industrial 25 Interleaved 2 of 5 ISBN ISBT 128 ISSN ITF-6 ITF-14 Matrix 25 MSI-Plessey Plessey Standard 25 UPC-A UPC-E
2D	Aztec Barcode Chinese Sensible Code Code One Data Matrix GM Code MaxiCode MicroPDF417 Micro QR Code PDF417 QR Code
Postal Codes	Australian Post China Post 25 KIX Post (Netherlands) Royal Mail (UK) USPS Intelligent Mail USPS Postnet

Mechanical/ Electrical

Dimensions (H x W x D)	160 x 44 x 33 mm (6.30 x 1.73 x 1.18 in)
Cable length	1.8m (5.9 ft)
Color	Ebony Black or Ceramic White
Power Typical Current	5V – 255.76 mA
Weight	130g (4.59 oz)
Interface	USB
Input Voltage	5.0 Vdc +/- 5%
Typical Current	5V – 255.76 mA

Environmental

Operating Temperature	-20°C to 60°C (-4°F to 140°F)
Storage Temperature	-40°C to 70°C (-40°F to 158 °F)
Humidity	5% to 95% relative humidity, non-condensing
ESD	±15KV (air discharge); ±8KV (contact discharge)
Drop	1.2m (3.94 ft)
Sealing	IP42

Overview - After Market Options

Drivers

Windows USB COM, OPOS, and JPOS

Operating System

Compatible with:

Windows
Win 11 Pro 64-bit
Win 10 Pro 64-bit
Windows 10 IoT Enterprise LTSC 2021 64-bit
Windows 10 IoT Enterprise LTSC 2019 64-bit
Windows 10 IoT Enterprise LTSB 2016 64-bit

Linux
Ubuntu 20.04.1 LTS
Ubuntu-18.04.6-desktop-amd64
Ubuntu-20.04.4.0-desktop-amd64
Ubuntu-22.04.0.0-desktop-amd64
RHEL 9.0-x86_64
SLE-12-SP5-Server-x86_64
SLE-15-SP3-x86_64
Debian-11.3.0-amd64

Agency Certifications

FCC Part 15 Class B, CE EMC Class B, KCC, VCCI

Option Kit Contents

HP Engage 2D G2 Barcode Scanner with attached 5.9 ft (1.8M) USB cable, scanner stand

HP Engage Indicator Light



General		
	Standard Colors	white, red, green, yellow
	Brightness	6,400 nits in solid states; up to 10,000 nits in flicker states
	Indicator Light Dimensions (excluding USB connector)	56 (W) x 29.4 (H) x 8.3 (D) mm (2.2 x 1.6 x 0.3 inches)
	Indicator Light Module Dimensions (including USB connector)	56 (W) x 29.4 (H) x 53.5 (D) mm (2.2 x 1.6 x 2.1 inches)
	Net Weight	Approx. 21 grams (0.74 oz)
	Interface	USB in 5V only
	MTBF	30,000 hours
	Power Consumption	5V - 600mA
	EMC / Safety Standards	FCC, CE, VCCI, RCM, KCC, ICE, CSA, EAC
Power		
	Voltage (typical)	5 VDC +/- 10%
	Current Consumption (typical)	200mA
	Communication Interface	USB (HID class)
Operating System		
	Compatible with:	**Windows** Windows 10 IoT Enterprise 2019 LTSC 64-bit Windows 10 IoT Enterprise 2021 LTSC 64-bit Windows 10 Pro 21H2 64-bit and newer Windows 11 Pro 22H2 64-bit and newer

Overview - After Market Options

Linux
Red Hat Enterprise Linux (RHEL) x64 8.5 and newer
SUSE Linux Enterprise Server (SLES) x64 15 SP3 and newer
Ubuntu x64 20.04.3.0 and newer

Android
Android 11 including Android 11 GMS

Software Interface

OPOS (Windows), JPOS (Linux, Windows, and Android) and HP Retail SDK for Android

Default Settings

- Initial state on Power on (plug-in): White
- Default setting of brightness: 50%

Note: HP Engage Indicator Light is an optional peripheral that requires factory installation and must be configured at HP Engage One Pro AiO purchase.

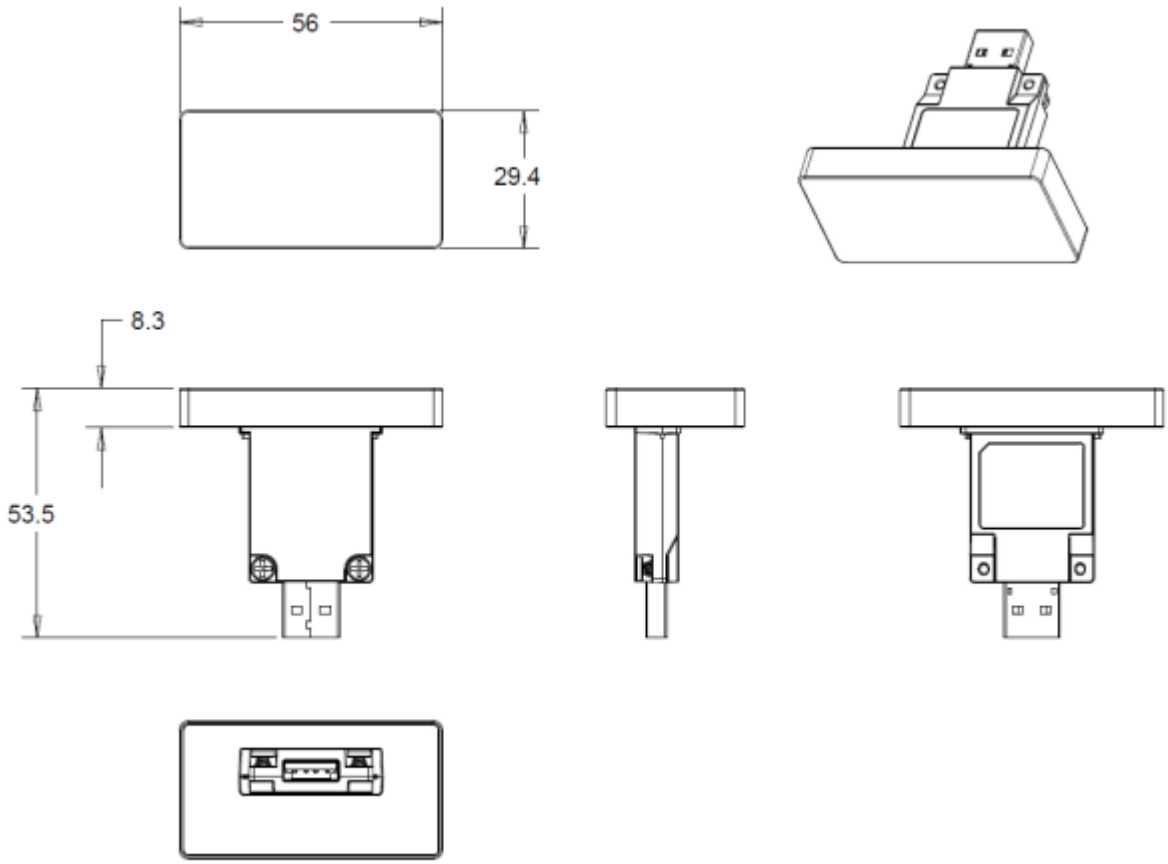

Dimensions in mm

Overview - After Market Options

Datalogic Magellan 1500i Presentation Barcode Scanner



Key Features and Benefits

- Seamlessly reads 1D and 2D bar codes, whether printed or displayed on mobile phone, laptop, or tablets.
- Digimarc® Barcode decoding.
- Subtle, adaptive illumination for user comfort.
- Compact, ergonomic design is ideal for hands-free or hand held operations
- Datalogic's 'Green Spot' technology for good-read feedback

General

Scanner Type	Omnidirectional Imager		
Source	1 Megapixel: 1280 x 800 pixel		
Light source	LED		
Depth of Field	Typical Performance*		
	Narrow Width		**Depth of Field**
	1D/Linear Codes		5 mils: 2.5 to 9.0 cm (0.9 to 3.5 in)
			7.5 mils: 0 to 17.0 cm (0 to 6.6 in)
			10 mils: 0 to 21 cm (0 to 8.2 in)
			UPC: 13 mils: 0 to 25.0 cm (0 to 9.8 in)
			20 mils: 1.0 to 30.0 cm (0.4 to 11.8 in)
	2D Codes		PDF: 6.5 mils: 2.5 to 11.0 cm (0.9 to 4.3 in)
			Data Matrix: 13 mils: 0 to 17.0 cm (0 to 6.7 in)
			PDF: 16 mils: 0 to 2.0 cm (0 to 7.8 in)
			Data Matrix: 24 mils: 0 to 25.0 cm (0 to 9.8 in)
Symbol Contrast	25% minimum reflectance		
Roll (tilt)	360°		

Overview - After Market Options

Pitch	± 65°
Skew	± 75°
1D decode symbologies	Autodiscriminates all standard 1D codes including GS1 DataBar™ linear codes.
2D decode symbologies	Aztec Code Data Matrix MaxiCode QR Code
Postal decode symbologies	Australian Post British Post Canadian Post China Post IMB Japanese Post KIX Post Planet Code Portuguese Post Postnet Royal Mail Code (RM4SCC) Swedish Post
Stacked decode symbologies	GS1 DataBar Composites GS1 DataBar Expanded Stacked GS1 DataBar Stacked GS1 DataBar Stacked Omnidirectional Micro PDF417 PDF417

Mechanical

Dimensions (L x W x H)	6.0 x 7.5 x 8.4 cm (2.4 x 3.0 x 3.3 in)
Weight	170 g (6 oz)
Cable length	2 m (6.5 ft)
Color	Black

Interface/Connection

Interface	USB-A

Temperature

Operating	0 to 40 °C (32 to 104 °F)
Storage/transport	-40 to 70 °C (-40 to 158 °F)
Humidity (non-condensing)	5 - 95%

Power

Standby	300mA
Current Operating	500mA

Reliability

Ambient Light	0 to 86,100 lux
Water Penetration Protection	IP52
Drop ESD	1.2 m (4.0 ft) 25 kV

Drivers

Windows UBB HID-KB and OPOS & JPOS (via USB-COM mode drivers)

Operating System

Overview - After Market Options

Compatible with:

Windows
Windows 10 IoT Enterprise for Retail (64-bit)
Windows 10 Pro (64-bit)

Linux
Red Hat/Cento 6 and 7 (32-bit and 64-bit)
Suse Linux® Enterprise POS 11 SP3 (32-bit and 64-bit)
Ubuntu 14.04 LTS (32-bit and 64-bit)

Agency Certifications

IEC62368

HP Engage Express Pedestal Stand Mounting

Pedestal Base Plate Top View

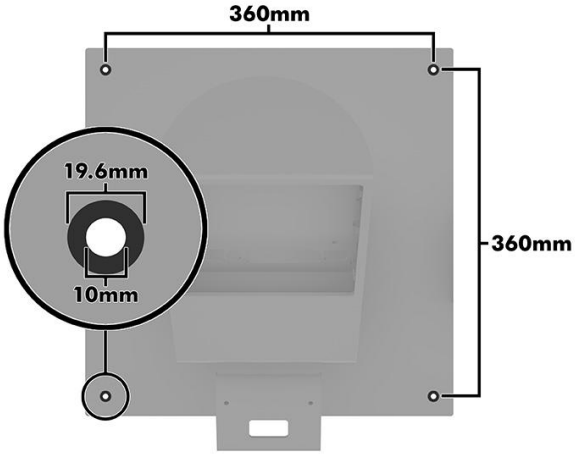

Note: HP Engage Express Pedestal Stand must be bolted to the floor, bolts not included.

HP Engage Express Countertop & Pedestal Dimensions with HP Engage One Pro AiO

NOTE: Weight and dimensions below do not include MSR, Biometric Reader, Countertop BCS Cradle, Bag Holder, Shelves, and Payment Arm.

Description	Length/Depth (in/mm)	Width (in/mm)	Height (in/mm)
Countertop + 15.6” Landscape	13.78/350.00	15.65/397.56	23.08/586.18
Countertop + 15.6” Portrait	13.78/350.00	13.78/350.00	25.65/651.40
Countertop + 19.5” Landscape	13.78/350.00	19.48/494.80	24.01/609.95
Countertop + 19.5” Portrait	13.78/350.00	13.78/350.00	27.37/695.26
Countertop + 23.8” Landscape	13.78/350.00	22.36/568.00	24.78/629.37
Countertop + 23.8” Portrait	13.78/350.00	13.78/350.00	28.72/729.39
Pedestal + 15.6” Landscape	17.99/457.00	17.99/457.00	53.24/1352.18
Pedestal + 15.6” Portrait	17.99/457.00	17.99/457.00	55.41/1407.35
Pedestal + 19.5” Landscape	17.99/457.00	19.48/495.00	54.17/1375.95
Pedestal + 19.5” Portrait	17.99/457.00	17.99/457.00	57.53/1461.16
Pedestal + 23.8” Landscape	17.99/457.00	22.36/568.00	54.94/1395.37
Pedestal + 23.8” Portrait	17.99/457.00	17.99/457.00	58.87/1495.39
HP Engage Express Countertop Barcode Scanner Cradle (with HP Engage 2D G2 BCS)	13.78/350.00	5.61/142.50	3.85/97.85
HP Engage Express Shelves (2)	14.49/368.00	7.24/184.00	4.00/101.56
HP Engage Express Bag Holder	8.52/216.37	13.37/339.50	13.75/349.31

HP Engage Express Countertop Mount	3.94/100.00	6.14/156.00	1.04/26.50
HP Engage Express Universal Payment Arm	7.15/181.70	3.50/88.94	2.24/56.97

HP Engage Express Countertop and Pedestal Weights

AMO Number	AMO Name	Weights (lb/kg)
6P2E2AA	HP Engage Express Countertop 1	26.90/12.20
6P2E3AA	HP Engage Express Countertop 2	27.12/12.30
6P2E4AA	HP Engage Express Countertop 3	28.22/12.80
6P2E5AA	HP Engage Express Countertop 4	28.45/12.90
6P2E7AA	HP Engage Express Pedestal 5	79.37/36.00
6P2E8AA	HP Engage Express Pedestal 6	79.59/36.10
6P2E9AA	HP Engage Express Pedestal 7	80.69/36.60
6P2F0AA	HP Engage Express Pedestal 8	80.91/36.7
6P2F1AA	HP Engage Express Pedestal 9	81.57/37.00
6P2F2AA	HP Engage Express Pedestal 10	81.35/36.90
6P2F3AA	HP Engage Express Pedestal 11	82.01/37.20
9Y3Q7AA	HP Engage Express Pedestal 12	
6P2F9AA	HP Engage Express Countertop Barcode Scanner Cradle (with HP Engage 2D G2 BCS)	2.89/1.31
6P2G0AA	HP Engage Express Shelves	2.49/1.13 (per shelf)
6P2F7AA	HP Engage Express Bag Holder	2.34/1.06
7P9E2AA	HP Engage Express Countertop Mount	0.68/0.31
7Y397AA	HP Engage Express Universal Payment Arm	0.90/0.41
9Y3Q8AA	HP Engage Express Side Payment Arm	

HP Engage One Pro All-in-One System Weight and Dimensions

NOTE: Weight and dimensions below are only HP Engage One Pro units and do not include MSR, Biometric Reader, Webcam, or CFD.

Head Unit-15.6"		
	Metric	US
Head Unit-15.6" Dimensions (Landscape)		
Height [mm/in]	26.4	1.0
Width [mm/in]	397.6	15.7
Depth [mm/in]	241.0	9.5
Volume (Liters/cubic inches)	2.5	154.35

Overview - After Market Options

Head Unit-15.6" Dimensions (Portrait)		
Height [mm/in]	26.4	1.0
Width [mm/in]	397.6	15.7
Depth [mm/in]	241.0	9.5
Volume (Liters/cubic inches)	2.5	154.35
Head Unit-15.6" Weight (Landscape)		
[kg/lb]	3.37	7.4
Head Unit-15.6" Weight (Portrait)		
[kg/lb]	3.35	7.4

Head Unit-19.5"		
	Metric	US
Head Unit-19.5" Dimensions (Landscape)		
Height [mm/in]	29.4	1.2
Width [mm/in]	494.8	19.5
Depth [mm/in]	292.6	11.5
Volume (Liters/cubic inches)	4.3	259.75
Head Unit-19.5" Dimensions (Portrait)		
Height [mm/in]	29.4	1.2
Width [mm/in]	488.8	19.2
Depth [mm/in]	292.6	11.5
Volume (Liters/cubic inches)	4.2	256.60
Head Unit-19.5" Weight (Landscape)		
[kg/lb]	5.70	12.6
Head Unit-19.5" Weight (Portrait)		
[kg/lb]	5.69	12.5

Head Unit-23.8"		
	Metric	US
Head Unit-23.8" Dimensions (Landscape)		
Height [mm/in]	29.4	1.2

Overview - After Market Options

Width [mm/in]	576.4	22.7
Depth [mm/in]	339.9	13.4
Volume (Liters/cubic inches)	5.8	351.50
Head Unit-23.8" Dimensions (Portrait)		
Height [mm/in]	29.4	1.2
Width [mm/in]	570.4	22.5
Depth [mm/in]	339.9	13.4
Volume (Liters/cubic inches)	5.7	347.84
Head Unit-23.8" Weight (Landscape)		
[kg/lb]	6.80	15.0
Head Unit-23.8" Weight (Portrait)		
[kg/lb]	6.79	15.0

Overview - After Market Options

HP Engage One Pro VESA hub		
	Metric	US
Dimensions		
Height [mm/in]	150.0	5.9
Width [mm/in]	125.0	4.9
Depth [mm/in]	24.4	1.0
Weight(Without Adapter)		
[kg/lb]	0.54	1.20

HP Engage One Pro AiO Summary Dimension Matrix

Display Heads Only	Width (Horizontal)	Height (Vertical)	Thickness
15.6 Landscape	397.6	241.0	26.4
19.5 Landscape	494.8	292.6	29.4
23.8 Landscape	576.4	339.9	29.4
15.6 Portrait	241.0	391.6	26.4
19.5 Portrait	292.6	488.8	29.4
23.8 Portrait- Slim VESA only*	339.9	570.4	29.4

ENVIRONMENTAL & INDUSTRY

Environmental Data

Sustainable Impact Specifications

- Countertop: 5% Recycled Metal*
- Pedestal: 9% Recycled Metal*
- This product is 92% recycle-able when properly disposed of at the end of life.
- Metals used:
  - Kiosk pedestal: aluminum
  - Base plate: steel

Footnote: Recycled metal is expressed as a percentage of the total weight of the metal according to ISO 14021 definitions for metal parts over 25 grams.

Packaging Materials

External: Paper/Corrugated

Internal: Plastic/Polyethylene Expanded – EPE

Plastic/Polyethylene low density – LDPE

The EPE foam packaging material is made from 100% recycled content.

The corrugated paper packaging materials contains at least 35% recycled content.

The plastic bag is 100 % recyclable

Material Usage

This product does not contain any of the following substances above regulatory limits (refer to the HP General Specification for the Environment at http://www.hp.com/hpinfo/globalcitizenship/environment/pdf/gse.pdf):

- Asbestos
- Certain Azo Colorants
- Certain Brominated Flame Retardants – may not be used as flame retardants in plastics
- Cadmium
- Chlorinated Hydrocarbons
- Chlorinated Paraffins
- Formaldehyde
- Halogenated Diphenyl Methanes
- Lead carbonates and sulfates
- Lead and Lead compounds
- Mercuric Oxide Batteries
- Nickel – finishes must not be used on the external surface designed to be frequently handled or carried by the user.
- Ozone Depleting Substances
- Polybrominated Biphenyls (PBBs)
- Polybrominated Biphenyl Ethers (PBBEs)
- Polybrominated Biphenyl Oxides (PBBOs)
- Polychlorinated Biphenyl (PCB)
- Polychlorinated Terphenyls (PCT)
- Polyvinyl Chloride (PVC) – except for wires and cables, and certain retail packaging has been voluntarily removed from most applications.
- Radioactive Substances
- Tributyl Tin (TBT), Triphenyl Tin (TPT), Tributyl Tin Oxide (TBTO)

Notes: * EPE foam packaging material is considered "recycled" pre-Consumer. The scrap or waste EPE material from the manufacturing process of these EPE foam pieces are re-introduced into the manufacturing process.

Overview - After Market Options

Packaging Usage

HP follows these guidelines to decrease the environmental impact of product packaging:

- Eliminate the use of heavy metals such as lead, chromium, mercury and cadmium in packaging materials.
- Eliminate the use of ozone-depleting substances (ODS) in packaging materials.
- Design packaging materials for ease of disassembly.
- Maximize the use of post-consumer recycled content materials in packaging materials.
- Use readily recyclable packaging materials such as paper and corrugated materials.
- Reduce size and weight of packages to improve transportation fuel efficiency.
- Plastic packaging materials are marked according to ISO 11469 and DIN 6120 standards.

End-of-life Management and Recycling

HP Inc. offers end-of-life HP product return and recycling programs in many geographic areas. To recycle your product, please go to: http://www.hp.com/go/reuse-recycle or contact your nearest HP sales office. Products returned to HP will be recycled, recovered, or disposed of in a responsible manner.

HP Inc. Corporate Environmental Information

For more information about HP's commitment to the environment

Global Citizenship Report
http://www.hp.com/hpinfo/globalcitizenship/gcreport/index.html
Eco-label certifications
http://www8.hp.com/us/en/hp-information/environment/ecolabels.html
ISO 14001 certificates:
PC Product Design ISO 14001 certificate
and
HP Operations ISO 14001 certificate

Overview - After Market Options

Service and Support

Three-year (3-3-3) limited warranty delivers (three years) of on-site, next business day[2] service for parts and labor and complimentary limited technical support.[3] HP Engage Express Shelves, HP Engage Express Bag Holder, and HP Engage Express Countertop Mount are 3-year advanced exchange (3-3-0). Three-year onsite and labor are not available in all countries. Optional HP Care Pack for HP Engage One Pro All-in-One.[1] To choose the right level of service for your HP product, visit HP Care Pack Central: http://http://www.hp.com/go/cpc

NOTES:

1. Terms and conditions may vary by country. Certain restrictions and exclusions apply. Other warranty variations may be offered in your region.
2. On-site service may be provided pursuant to a service contract between HP and an authorized HP third-party provider, and is not available in certain countries. Global service response times are based on commercially reasonable best effort and may vary by country.
3. Technical support applies only to HP-configured Compaq and third-party HP-qualified hardware and software. 24 x 7 support may not be available in some countries.

Date of change:	Version History:		Description of change:
January 27, 2025	From v1 to v2	Changed	Format
February 20, 2025	From v2 to v3	Changed	ENVIRONMENTAL & INDUSTRY section
May 14, 2025	From v3 to v4	Added	Engage Express section
June 3, 2025	From v4 to v5	Changed	OPERATING SYSTEM section
July 15, 2025	From v5 to v6	Changed	Format
December 16, 2025	From v6 to v7	Addition	At a Glance from HP Engage Express QS

Copyright © 2025 HP Development Company, L.P.

All rights reserved. Microsoft, Windows, Windows 7, Windows 8, and Windows 10 are registered trademarks or trademarks of Microsoft Corporation in the U.S. and/or other countries. Intel®, Celeron® and Core™ are registered trademarks or trademarks of Intel Corporation in the U.S. and/or other countries. Linux is the registered trademark of Linus Torvalds in the U.S. and other countries. Bluetooth® is a registered trademark of its proprietor and used by HP Inc. under license. ENERGY STAR® is a registered trademark owned by the U.S. Environmental Protection Agency.

The information contained herein is subject to change without notice. The only warranties for HP products are set forth in the express limited warranty statements accompanying such products. Nothing herein should be construed as constituting an additional warranty. HP shall not be liable for technical or editorial errors or omissions contained herein.