Owner's Manual
Havis Docking Station
For Zebra ET60, ET65, ET60W and ET65W

DS-ZEB-500 Series

This owner's manual applies to the following part numbers:

DS-ZEB-501

DS-ZEB-501-3

DS-ZEB-503

DS-ZEB-504

DS-ZEB-504-3

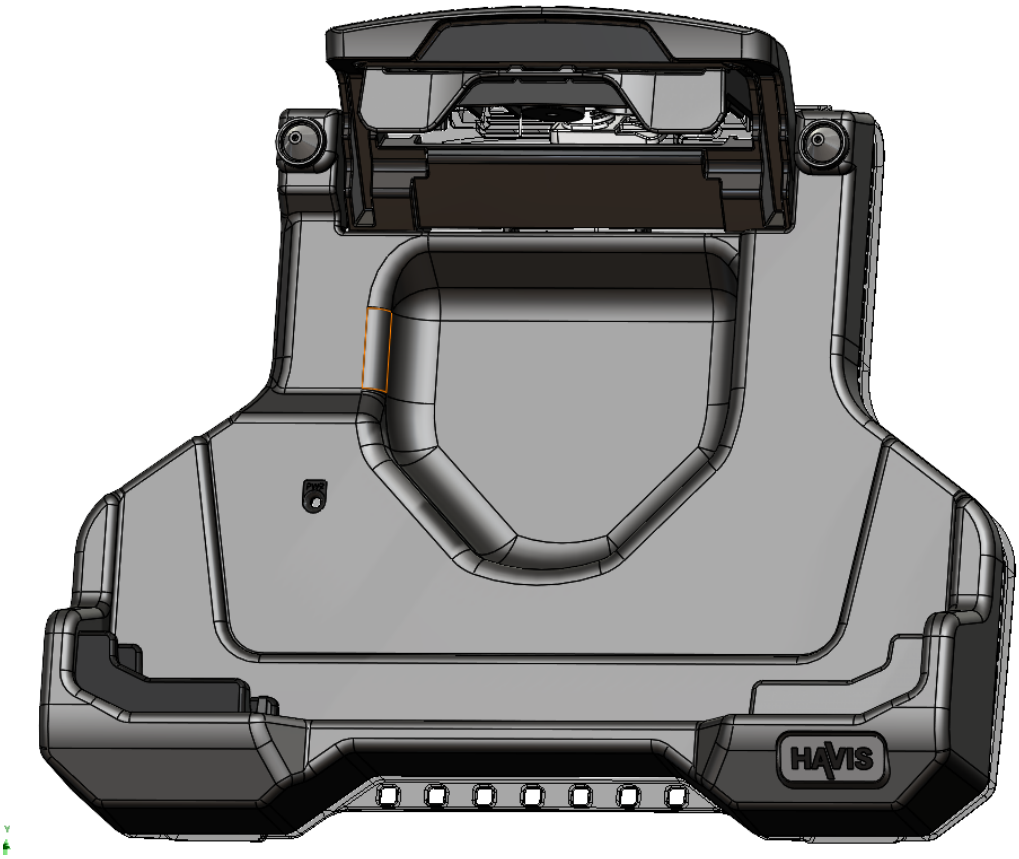

DS-ZEB-500_SERIES_OMN_12-24

Before Beginning

Havis is pleased to provide this Owner's Manual to aid in the proper installation and use of the DS-ZEB-500 Series Docking Station for the Zebra ET6x 10.1" Tablet.

For questions regarding the set-up of your DS-ZEB-500 Series Docking Station, please contact Havis at 1-800-524-9900 or visit www.havis.com for additional product support and information.

⚠ WARNING

- **NEVER STOW OR MOUNT THE DOCKING STATION DIRECTLY IN A VEHICLE AIRBAG DEPLOYMENT ZONE.**
- **DO NOT USE COMPUTER WHILE DRIVING.**
- **DO NOT PLACE METAL OBJECTS OR CONTAINERS OF LIQUID ON TOP OF THE DOCKING STATION.**
- **IF A MALFUNCTION OCCURS, IMMEDIATELY UNPLUG THE POWER SUPPLY AND REMOVE THE TABLET.**

⚠ CAUTION

- **READ ALL INSTRUCTIONS THOROUGHLY BEFORE BEGINNING INSTALLATION.**
- **THIS PRODUCT IS NOT CLASSIFIED WITH AN IP (INGRESS PROTECTION) RATING. DO NOT STORE, INSTALL, OR OPERATE THE DOCKING STATION WHERE WATER, MOISTURE, STEAM, DUST, ETC. ARE PRESENT.**
- **DO NOT DOCK OR UNDOCK YOUR COMPUTER UNLESS IT IS POWERED OFF. DOCKING OR UNDOCKING WITH YOUR COMPUTER IN ON, STANDBY, HIBERNATION, OR SLEEP MODES CAN CAUSE PERMANENT DAMAGE.**
- **FOR THE DS-ZEB-501, DS-ZEB-501-3, DS-ZEB-503, DS-ZEB-504-1, AND DS-ZEB-504-3 DOCKING STATIONS: DO NOT CONNECT DIRECTLY TO VEHICLE VOLTAGE SOURCE: THIS PRODUCT REQUIRES A CERTIFIED, AUTOMOTIVE GRADE, HAVIS APPROVED POWER SUPPLY WITH A 12 V POWER OUTPUT, SUCH AS THE LPS-189, OR AN APPROPRIATE ISOLATED POWER SUPPLY SUCH AS THE LPS-190 OR LPS-191. FAILURE TO COMPLY WITH THIS REQUIREMENT WILL CAUSE PRODUCT DAMAGE THAT IS NOT REPAIRABLE AND IS NOT COVERED UNDER WARRANTY.**
- **USE ONLY THE SPECIFIED POWER SUPPLY CABLE WITH THIS DOCKING STATION.**
- **DO NOT CONNECT CABLES INTO PORTS OTHER THAN WHAT THEY ARE SPECIFIED FOR.**
- **DO NOT LEAVE THE DOCKING STATION IN A HIGH TEMPERATURE ENVIRONMENT (GREATER THAN 70°C, 158°F) FOR A LONG PERIOD OF TIME.**

NOTICE

- **PLEASE REFER TO ZEBRA ET6x OWNER'S MANUAL FOR BATTERY CHARGING INFORMATION.**
- **THE DS-ZEB-500 SERIES IS NOT COMPATIBLE WITH ALL OF THE ZEBRA ET6x ACCESSORIES. THIS DOCKING STATION WAS INTENDED TO ACCOMMODATE ALL ZEBRA BATTERIES. IT WAS ALSO INTENDED TO ACCOMMODATE SMART CARD READERS, RFID READER, AND KICKSTAND, ALL WITH OR WITHOUT HANDSTRAP.**
- **FOR DOCKING STATION MODELS EQUIPPED WITH A BUNDLED POWER SUPPLY REFER TO THE POWER SUPPLY'S REFERENCE GUIDE.**
- **WHEN DOCKED, THE COMPUTER PREVENTS OVERCHARGING OF THE BATTERY BY RECHARGING ONLY WHEN THE REMAINING POWER IS LESS THAN APPROXIMATELY 95% OF REMAINING CAPACITY.**

Avant de commencer

Havis est ravi de fournir ce manuel du propriétaire pour faciliter l'installation et à assurer une utilisation adéquate de la station d'accueil de série DS-XXX-#### pour le insérer la marque et le modèle de l'ordinateur.

Pour toute question concernant la configuration de votre station d'accueil de série DS-XXX-####, veuillez communiquer avec Havis au 1-800-524-9900 ou visitez le www.havis.com pour obtenir de l'aide et des informations supplémentaires sur le produit.

⚠ AVERTISSEMENT

- **NE JAMAIS RANGER OU MONTER LA STATION D'ACCUEIL DIRECTEMENT DANS LA ZONE DE DÉPLOIEMENT D'UN COUSSIN GONFLABLE DU VÉHICULE.**
- **NE PAS UTILISER L'ORDINATEUR EN CONDUISANT.**
- **NE PAS PLACER D'OBJETS MÉTALLIQUES OU DE RÉCIPIENTS CONTENANT DU LIQUIDE SUR LA STATION D'ACCUEIL.**
- **EN CAS DE DYSFONCTIONNEMENT, DÉBRANCHEZ IMMÉDIATEMENT L'ALIMENTATION ÉLECTRIQUE ET RETIREZ L'ORDINATEUR PORTABLE.**

⚠ ATTENTION

- **LISEZ ATTENTIVEMENT TOUTES LES INSTRUCTIONS AVANT DE COMMENCER L'INSTALLATION.**
- **CE PRODUIT N'EST PAS DOTÉ D'UN INDICE DE PROTECTION IP (PROTECTION CONTRE LES INFILTRATIONS). NE PAS ENTREPOSER, NE PAS INSTALLER ET NE PAS UTILISER LA STATION D'ACCUEIL DANS UN ENDROIT OÙ DE L'EAU, DE L'HUMIDITÉ, DE LA VAPEUR, DE LA POUSSIÈRE, ETC. SONT PRÉSENTS.**
- **NE PAS PLACER OU RETIRER L'ORDINATEUR DE LA STATION D'ACCUEIL S'IL N'EST PAS ÉTEINT. PLACER OU RETIRER L'ORDINATEUR EN MODE MARCHE, ATTENTE, VEILLE OU VEILLE PROLONGÉE PEUT PROVOQUER DES DOMMAGES PERMANENTS.**
- **POUR LES STATIONS D'ACCUEIL DS-ZEB-501, DS-ZEB-501-3, DS-ZEB-503, DS-ZEB-504-1, et DS-ZEB-504-3 : NE PAS CONNECTER DIRECTEMENT À LA SOURCE DE TENSION DU VÉHICULE: CE PRODUIT NÉCESSITE UNE SOURCE D'ALIMENTATION NOMINALE DE QUALITÉ AUTOMOBILE, APPROUVÉE PAR ZEBRA, CONÇUE POUR UNE SORTIE CONTINUE ET RÉGULÉE 12 VDC (*NUMÉRO DE PIÈCE HAVIS LPS-189 OU ÉQUIVALENT*). LE NON-RESPECT DE CETTE EXIGENCE ENTRAÎNERA DES DOMMAGES AU PRODUIT QUI NE SONT PAS RÉPARABLES ET NE SONT PAS COUVERTS PAR LA GARANTIE.**
- **UTILISER UNIQUEMENT LE BLOC D'ALIMENTATION SPÉCIFIÉ AVEC CETTE STATION D'ACCUEIL.**
- **NE PAS BRANCHER DE CÂBLES DANS D'AUTRES PORTS QUE CEUX AUXQUELS ILS SONT DESTINÉS.**
- **NE LAISSER PAS LA STATION D'ACCUEIL DANS UN ENVIRONNEMENT À HAUTE TEMPÉRATURE (PLUS DE 70°C, 158°F) POUR UNE PÉRIODE PROLONGÉE.**

Specifications Tablet, Set-Up and Port Specifications

Item	Description	Vendor	Download Link	Version	Identification	Specifications
1	Serial Port	FTDI	https://ftdichip.com/drivers/vcp-drivers/	Ver 2.12.36.4U for Windows (or later)	VID=0403, PID=6015	Pin 9 (5V/1A)
2	Rear USB	Microchip	WIN OS PnP	-	-	USB 2.0 (5V/1.5A)
3	Ethernet	Microchip	https://www.microchip.com/en-us/software-library?swsearch=LAN95xx%20&%20LAN97xx%20Windows%20(OneCore)%20Device%20Drivers	Ver 18.12.18.0 for Windows (or later)	VID=0424, PID=EC00	100 Mbps MAX

Please see Zebra (ET6x) Specification Sheets for Tablet Specifications.

ET60/ET65 Rugged Enterprise Tablets Specification Sheet | Zebra | Zebra

ET60W/ET65W Rugged Enterprise Tablets Specification Sheet | Zebra

Specifications Docking Station

Configuration (SKU)	Description	Power Options	Dock Input Voltage Requirement	Weight : Lbs (kg)
DS-ZEB-501	Standard	External Power Supply	12V DC	2.10 (0.95)
DS-ZEB-501-3	Standard I/O with Pass-Thru Antenna	External Power Supply	12V DC	2.13 (0.97)
DS-ZEB-503	Cradle	None	None	1.94 (0.88)
DS-ZEB-504	Advanced	External Power Supply	12V DC	2.15 (0.97)
DS-ZEB-504-3	Advanced I/O with Pass-Thru Antenna	External Power Supply	12V DC	2.19 (0.99)
Dimensions	10.2” (26.0 cm) H x 12.0” (30.5 cm) W x 3.3” (83.8 cm) D			
Operating Environment	-4° C to 50° C (25° F to 122° F)			
Storage Environment	-40° C to 70° C (-40° F to 158° F)			

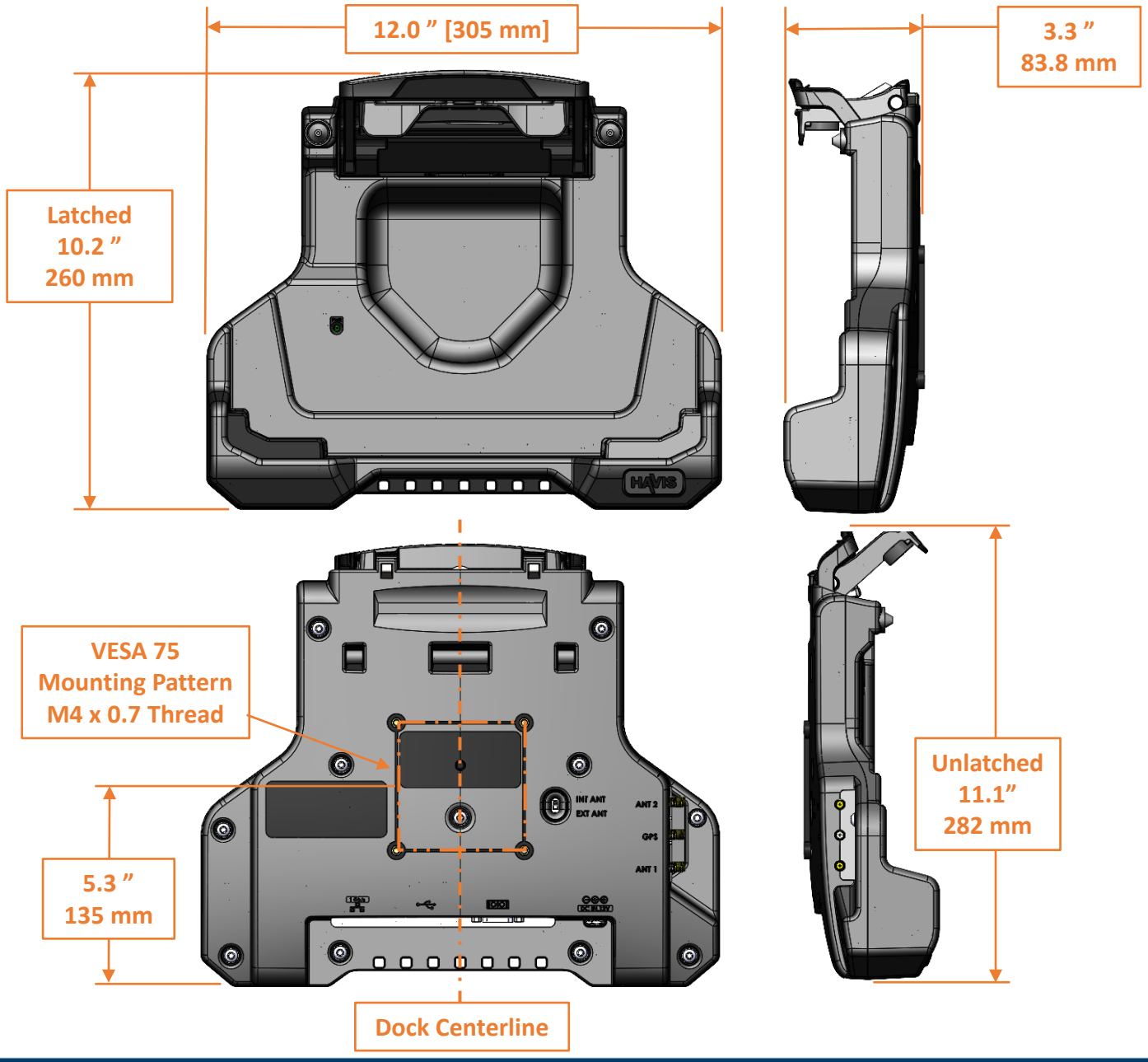

Parts Included

Docking Station

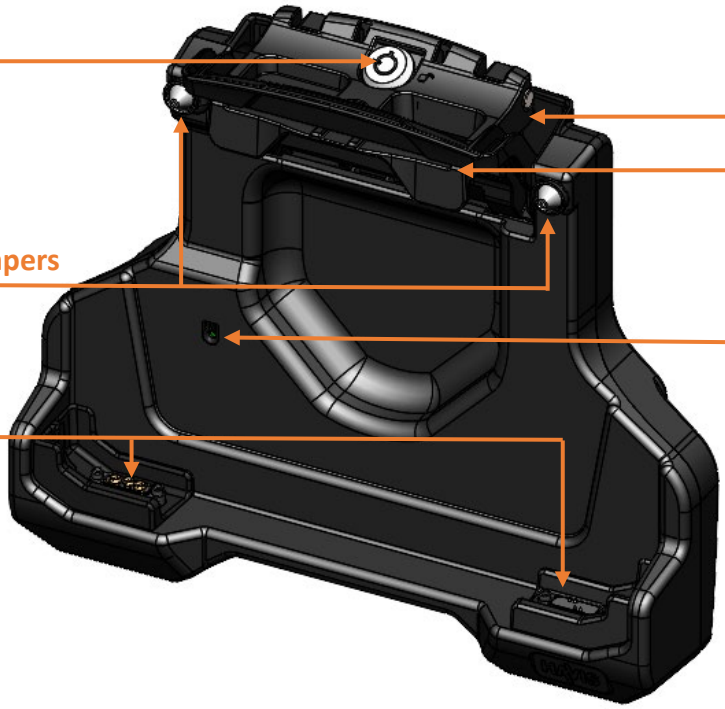

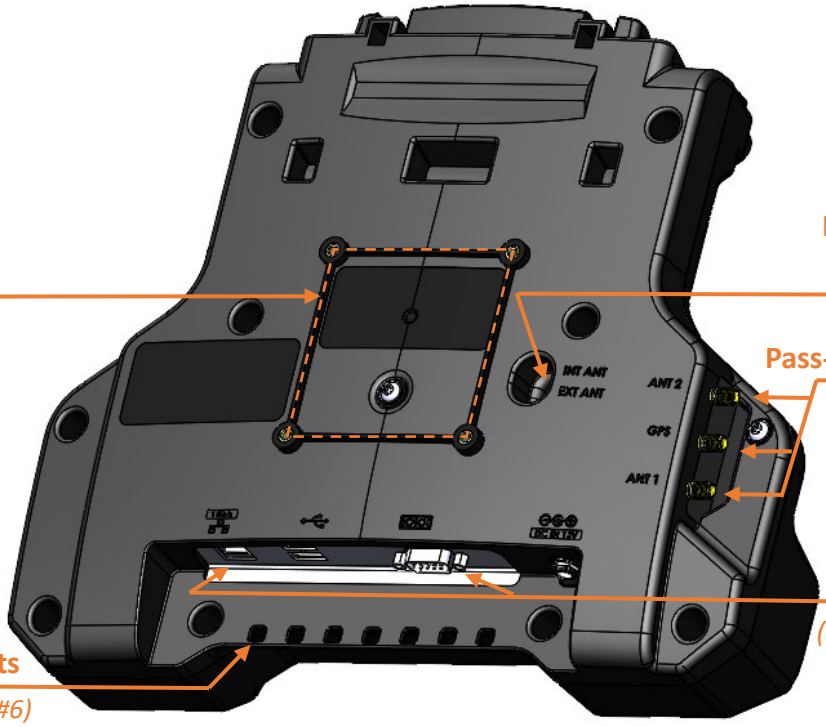

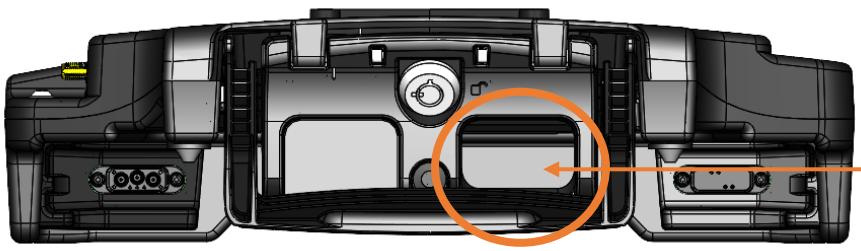

Parts Included *(continued)*

Hardware Kit *(HWK-0035)*

This Hardware Kit includes:
1. Zip Ties (4)
2. Keys (2)
3. M4 x 0.7 x 12mm long Pan Head Screws (5)
4. Split Lock Washers (5)
5. Washers, M4 (5)

Tools required for installation:
- #2 Phillips (For M4 Pan Head Screws)

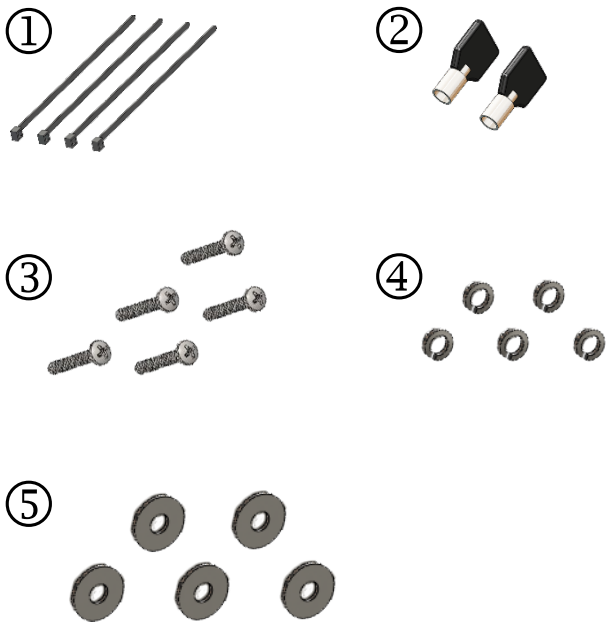

Antenna Identification

DS-ZEB-501-3 AND 504-3

A – ZEBRA "ANT 2" (ANTENNA 2)
B – ZEBRA "GPS"
C – ZEBRA "ANT 1" (ANTENNA 1)

Antenna Connectors
(SMA)

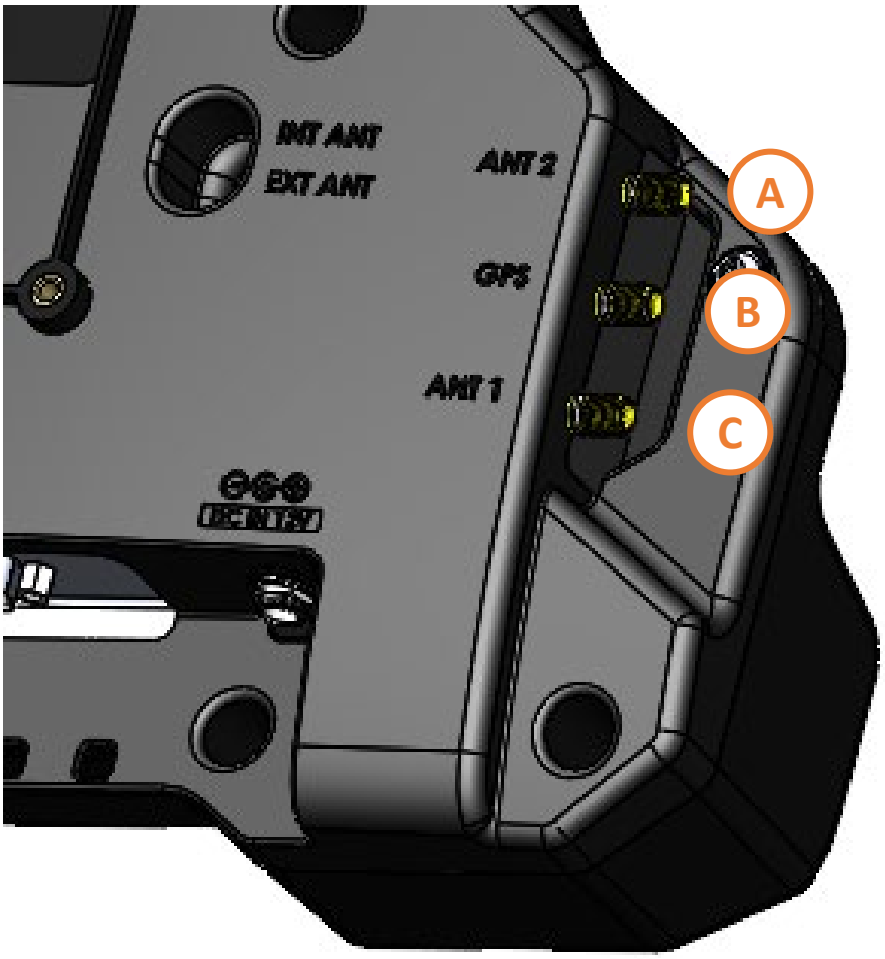

Port Replication Capability

STANDARD I/O

DS-ZEB-501, DS-ZEB-501-3

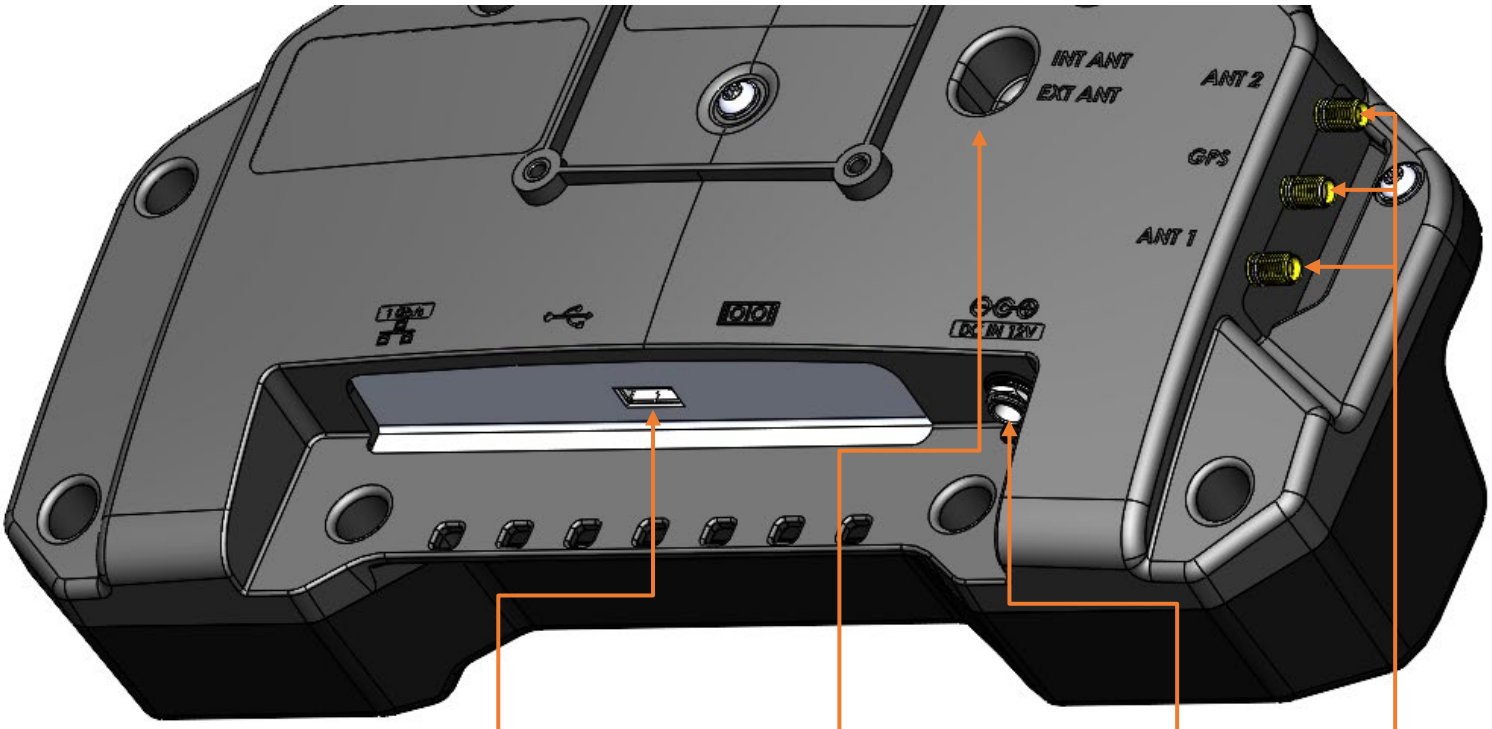

USB 2.0
Type A
5V/1.5A

External -
Internal
Antenna
Switch
(EXT-INT)
DS-ZEB-501-3
ONLY

Power Input
12.0 VDC

Antenna (SMA)
DS-ZEB-501-3
ONLY

Port Replication Capability

ADVANCED I/O

DS-ZEB-504, DS-ZEB-504-3

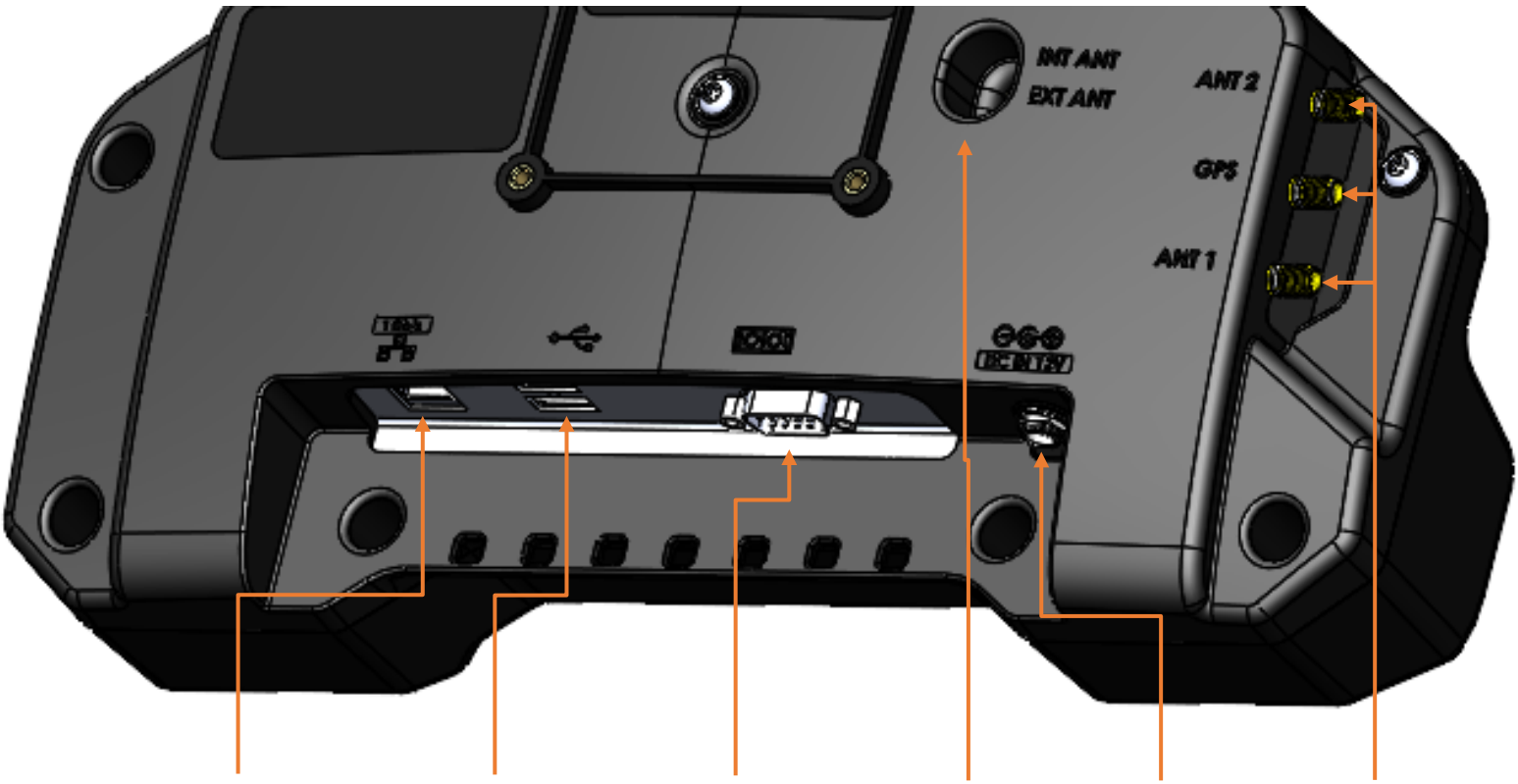

Ethernet
10/100Mb/s

2X USB 2.0
Type A
5V/1.5A

Powered Serial
RS-232 (DB-9)
5V/1A (ON PIN9)

External - Internal Antenna Switch
(EXT-INT)
DS-ZEB-504-3 ONLY

Power Input
12.0 VDC

Antenna (SMA)
DS-ZEB-504-3 ONLY

Installation

1) Orient the docking station in a position that is comfortable to work with.
2) Install all cables that are necessary for computing needs.
3) Use zip-ties to strain relieve cables to the strain relief points, routing all cables as needed high and tight to docking station.

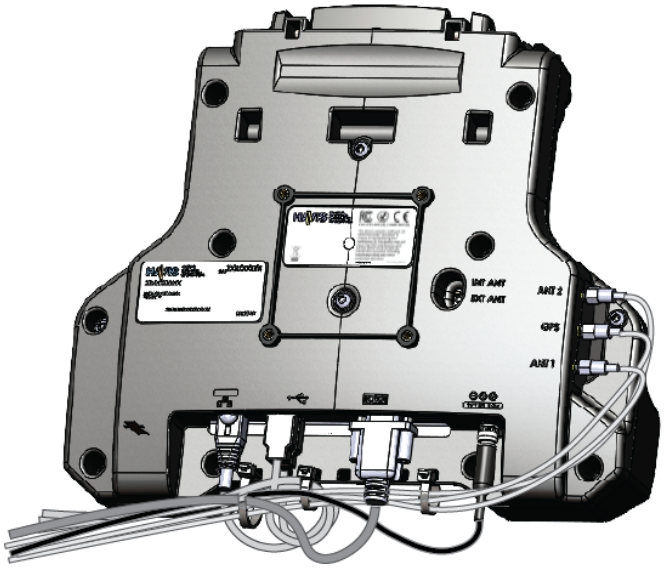

4) Align the docking station mounting holes with the hole pattern on the mounting device. Using the four (4) M4 0.7 x 12 mm screws, four (4) M4 washers, and four (4) M4 lock washers, secure the docking station to the mounting device. Torque the screws to 20 in-lbs (2.3Nm) ± 10%

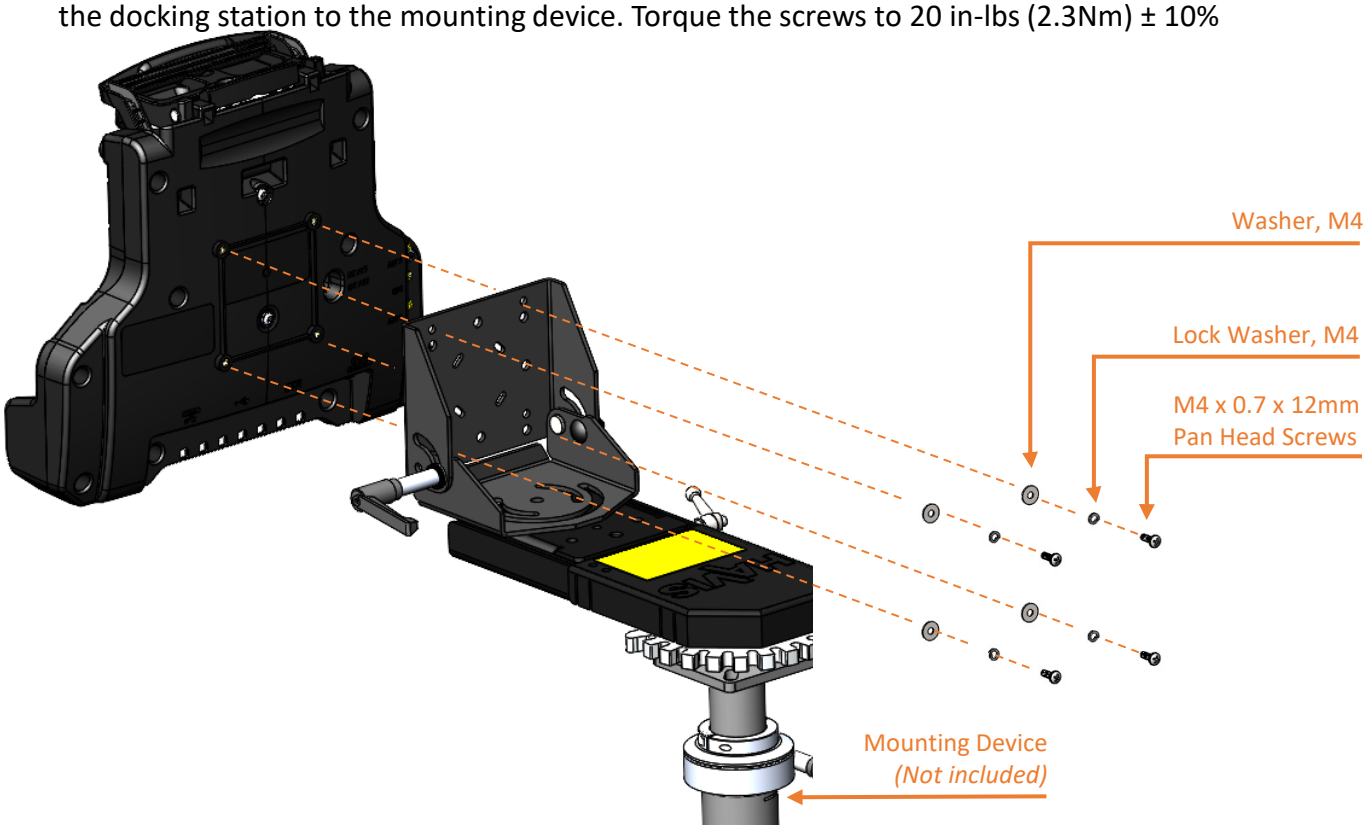

Cable Management

1) Orient the docking station in a position that is comfortable to work with.
2) Secure the cable bundle with as many zip-ties as necessary.
3) Create a service loop with the cable bundle to ensure that no tension is on the connectors, and to enable the intended range of motion.
4) Tie off the cables onto a stationary part of the mounting system.
   (Mounting system not included with the docking station.)

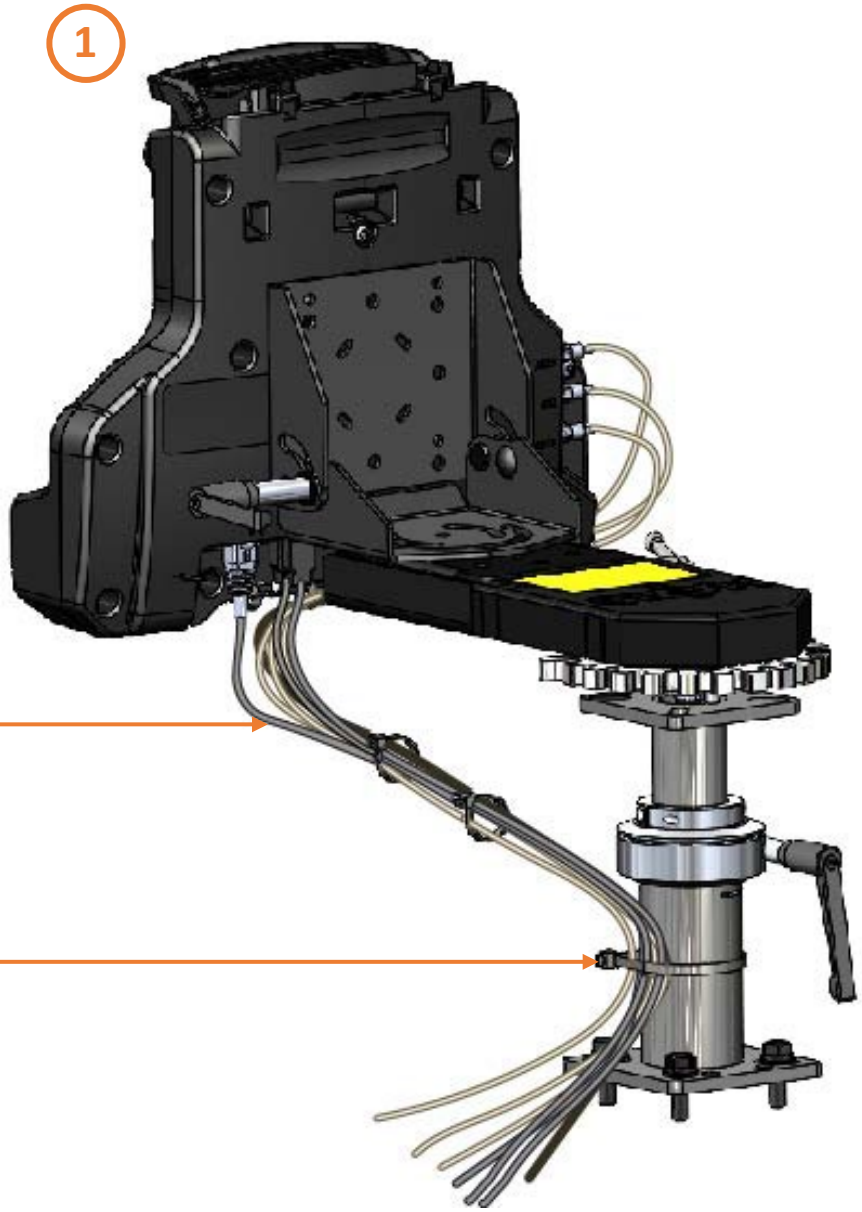

Operation - Docking

⚠ CAUTION

DO NOT FORCE THE TABLET ONTO THE DOCKING STATION. IF THERE IS RESISTANCE, CHECK THE ALIGNMENT OF TABLET ON THE DOCKING STATION.



Alignment Posts on the DS-ZEB-500 Series Docking Station

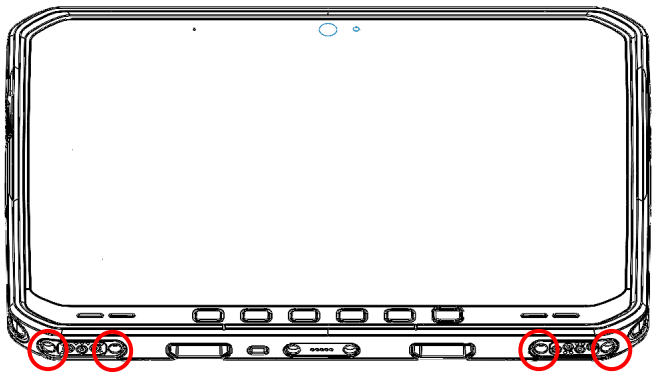

Alignment Sockets on the Zebra ET6x Tablets.

⚠ WARNING

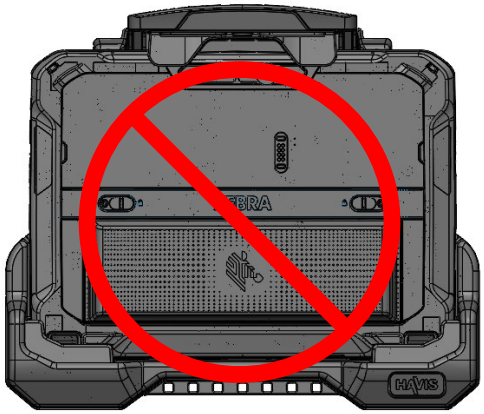

DO NOT ATTEMPT TO DOCK THE TABLET BACKWARDS IN THE DOCKING STATION.

Operation - Docking

1) Ensure the Docking Station is unlatched by lifting the Latch Handle.

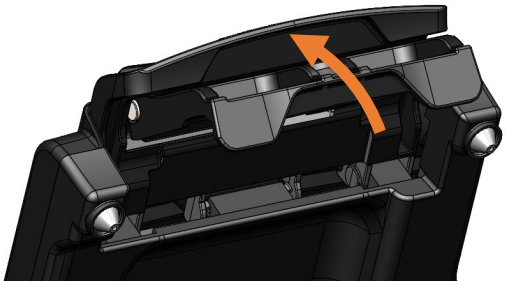

2) Hold the tablet in landscape orientation with the bottom angled toward the Docking Station, aligning the tablet's Docking Connector with the Docking Station's Docking Connector. Lower the tablet into the bottom of the Docking Station.

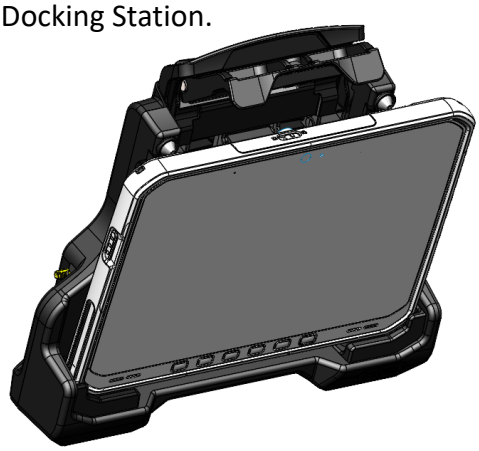

3) Pivot the tablet so the top pushes against the Docking Station's rubber bumpers. While holding the tablet firmly against the bumpers, pull forward and down on the Latch Handle to secure the tablet in place. NOTE: The Latch Handle will drive the Latch Hook over the front of the tablet. Pull the Latch Handle until it snaps into position.

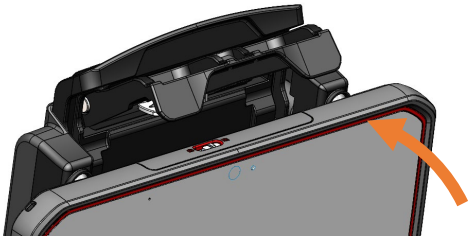

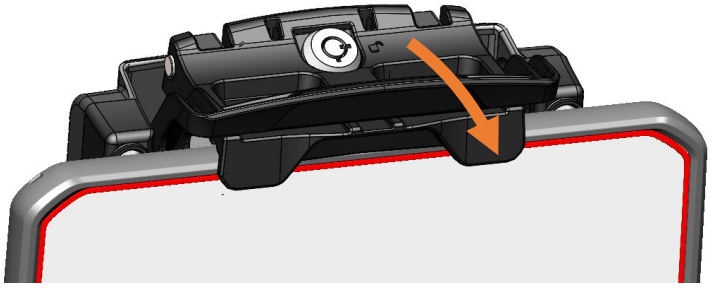

4) For theft deterrence, lock the docking station using the supplied key.

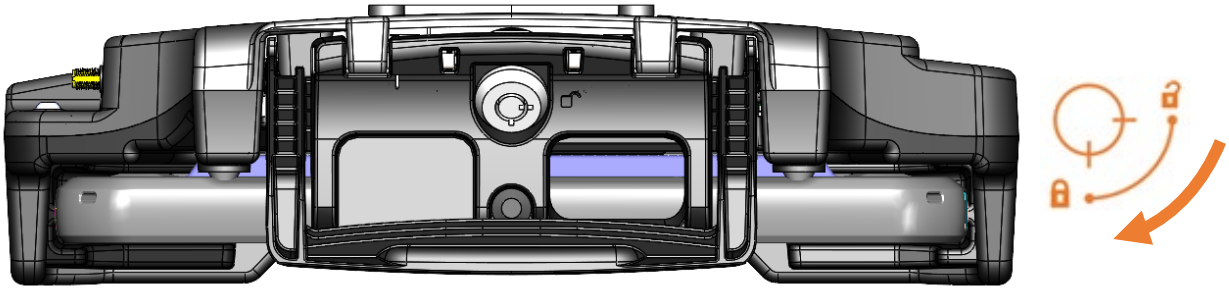

Operation - Undocking

1) If previously locked, unlock the Docking Station using the supplied key.

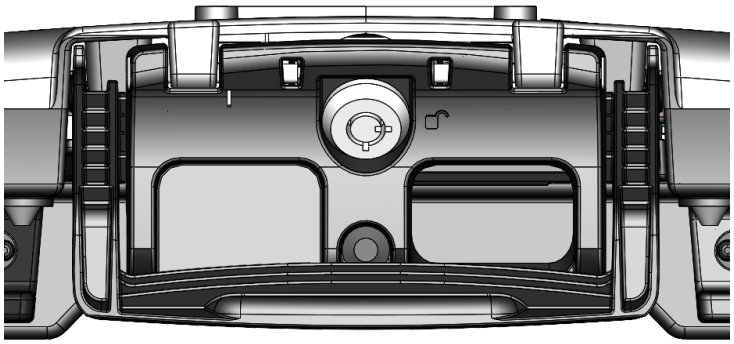



2) Lift only the Latch Handle up and rearward. Note that the Latch Hook is spring loaded and will follow the Latch Handle.

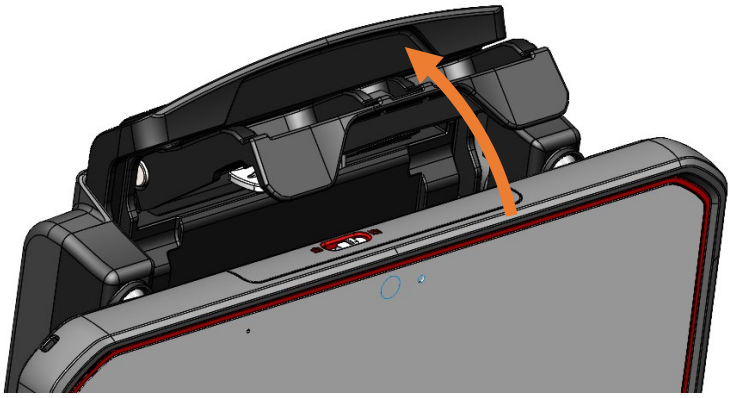

3) Once unlatched grab the tablet, pivot it forward, and carefully lift the tablet out of the Docking Station top end first.

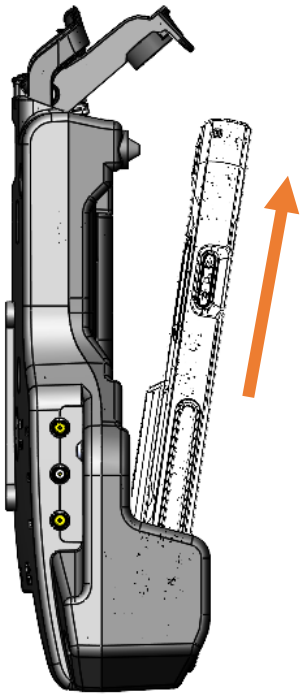

Regulatory Information

Canada

CAN ICES-3 (B) / NMB-3 (B)

Class B equipment
This class B digital apparatus meets all requirements of the Canadian Interference-Causing Equipment Regulations.

Équipement de classe B
Cet appareil numérique de la classe B respecte toutes les exigences du Règlement sur le matériel brouilleur du Canada.

United States of America

FCC Compliance

This device complies with part 15 of the FCC Rules. Operation is subject to the following two conditions: (1) This device may not cause harmful interference, and (2) this device must accept any interference received, including interference that may cause undesired operation.

Note: This equipment has been tested and found to comply with the limits for a Class B digital device, pursuant to part 15 of the FCC Rules. These limits are designed to provide reasonable protection against harmful interference in a residential installation. This equipment generates, uses and can radiate radio frequency energy and, if not installed and used in accordance with the instructions, may cause harmful interference to radio communications. However, there is no guarantee that interference will not occur in a particular installation. If this equipment does cause harmful interference to radio or television reception, which can be determined by turning the equipment off and on, the user is encouraged to try to correct the interference by one or more of the following measures:

- Reorient or relocate the receiving antenna.
- Increase the separation between the equipment and receiver.
- Connect the equipment into an outlet on a circuit different from that to which the receiver is connected.
- Consult the dealer or an experienced radio/TV technician for help.

Changes or modifications not expressly approved by the party responsible for compliance could void the user's authority to operate the equipment.

Responsible party (contact for FCC matters only):
Havis, Inc.
75 Jacksonville Road
Warminster, PA 18974
havis.com/contact-us

Regulatory Information *(continued)*

European Union

Waste Electrical and Electronic Equipment (WEEE)

Electrical and electronic equipment (EEE) contain materials, components and substances that can be hazardous and harmful to human health and the environment when WEEE is not disposed of properly.

Products marked with the "crossed-out wheeled bin" symbol are EEE. The crossed-out wheeled bin symbolizes that WEEE must not be disposed of together with unsorted household waste, but must be collected separately.

For this purpose, all municipalities have established collection schemes where WEEE can be handed in, free of charge, by citizens at recycling stations or other collection points or collected directly from households. Further information should be obtained from the municipality's technical administration.

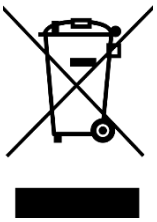

This symbol on the product or on its packaging indicates that the product must not be disposed of with normal household waste. Instead, it is your responsibility to dispose of your waste equipment by arranging to return it to a designated collection point for the recycling of WEEE. By separating and recycling your waste equipment at the time of disposal, you will help to conserve natural resources and ensure that the equipment is recycled in a manner that protects human health and the environment. This product is EEE and shall not be placed in the municipal waste after end of its life. This device should be handled properly and handed over to appropriate collection places or to authorized companies.

Conformité Européene (CE) Mark



The CE marking on a Havis product indicates conformity to the provisions of applicable European Union (EU) directives. The EU Declaration of Conformity (DoC) is the manufacturer’s declaration that the product complies with those directives.

Related Products

Havis offers a wide variety of accessory products specifically for use with your Docking Station.
For more information or to order, please visit ***www.havis.com***.



DS-DA-501
Replacement Keys
Set of (2) replacement keys for HAVIS Docking Stations.



LPS-191
20-60V Isolated Power Supply
20-60V Isolated Power Supply For Use With DS-ZEB-500 Series Docking Stations.



LPS-190
12-32V Isolated Power Supply
12-32V Isolated Power Supply For Use With DS-ZEB-500 Series Docking Stations.



LPS-189
96W Power Supply
Non-Isolated Power Supply For Use With DS-ZEB-500 Series Docking Stations.



CG-X
Charge Guard-Select
Auto Shut-Off timer that will protect your vehicles battery and peripherals.



DS-DA-604
Rugged USB-C Port Replication Hub
Two Type C and two Type A USB3.1 ports and a Gigabit RJ45 port.

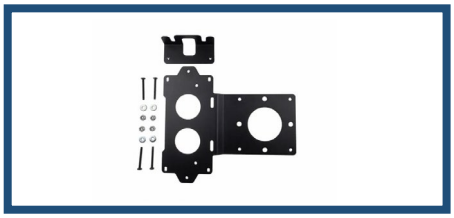

LPS-211
Multipurpose Bracket
Multipurpose Bracket Secures Power Supplies On Havis Docking Stations Or Cradles.