SAMSUNG

Unpacking and Installation Guide

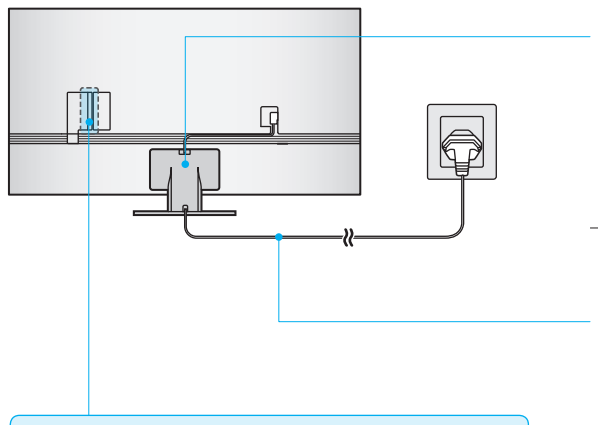

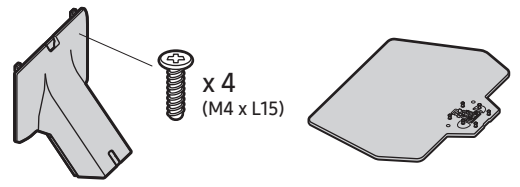



Power Cable



Samsung Smart Remote

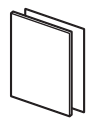

Simple User Guide / Remote control guide / Regulatory Guide

BN68-20861A-00

◀ Scan this QR code with your smart phone to see helpful videos.

1

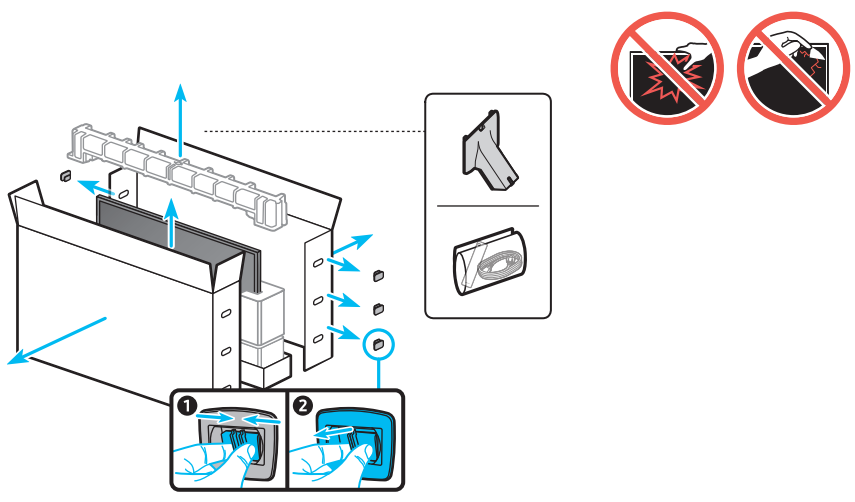

2

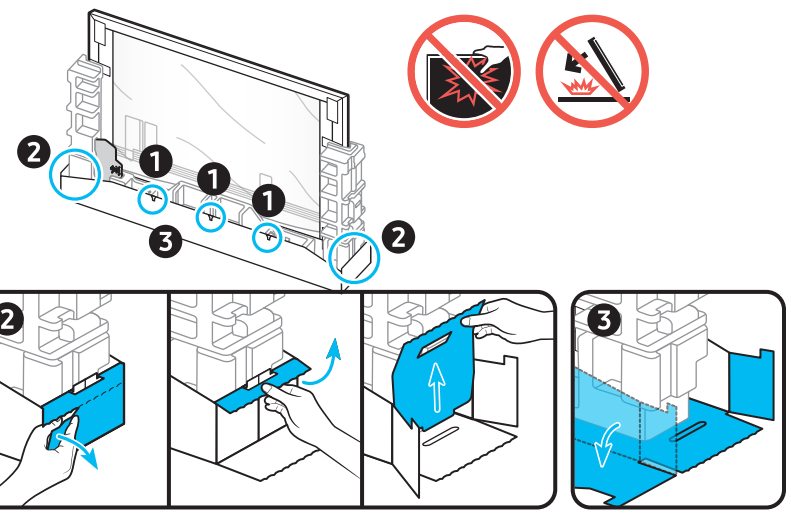

3

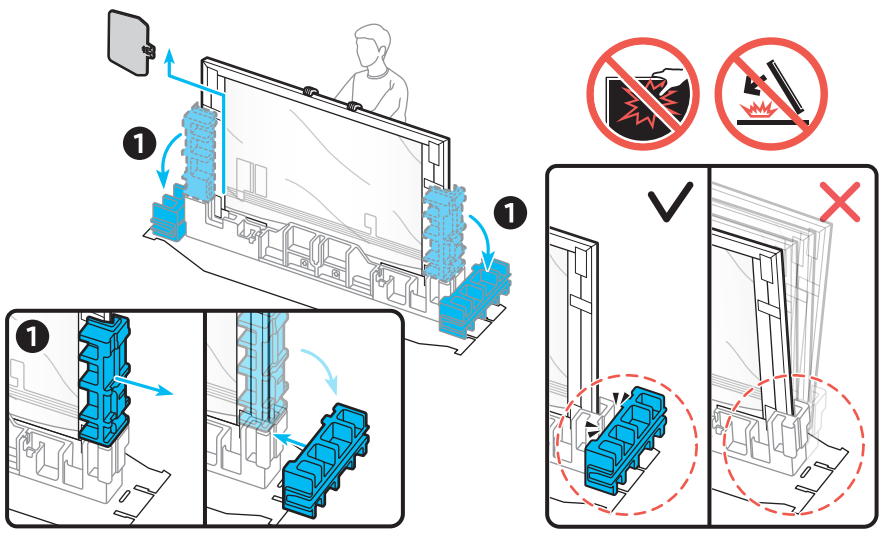

4

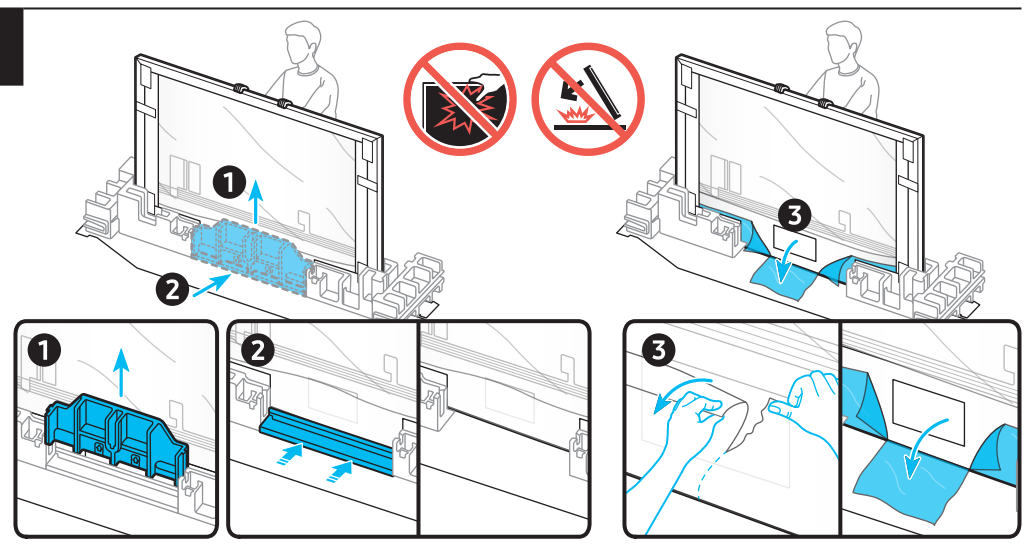

5

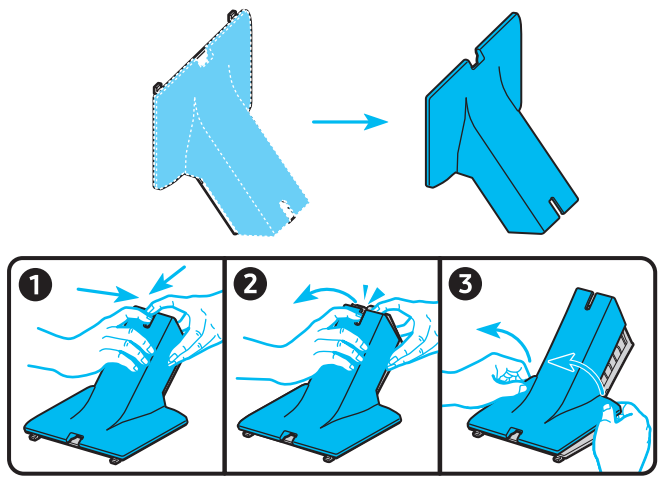

6

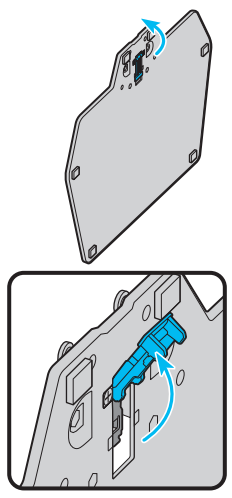

7

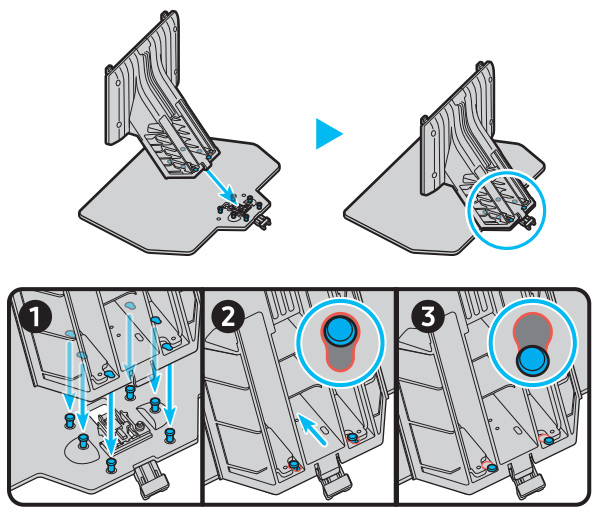

8

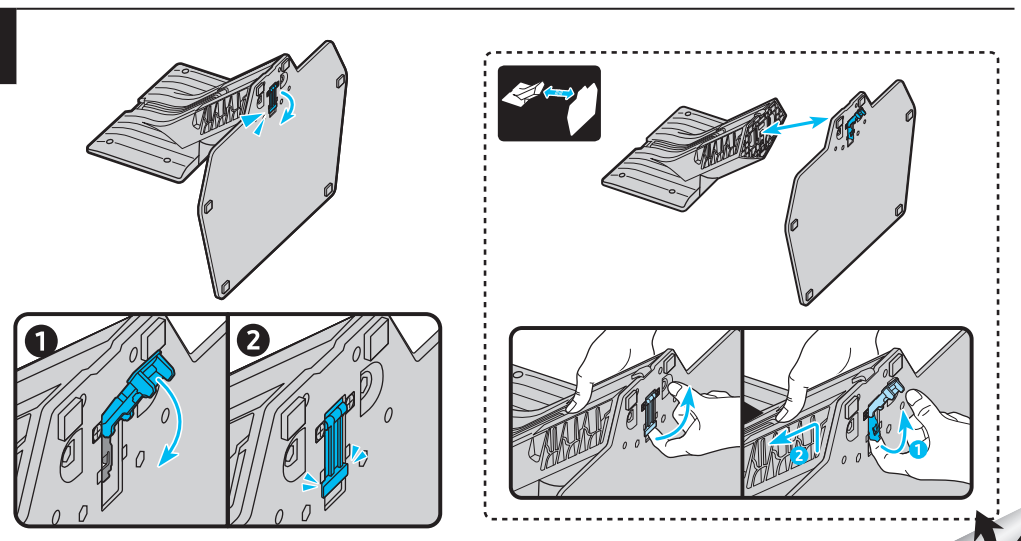

9

x 4
(M4 x L15)

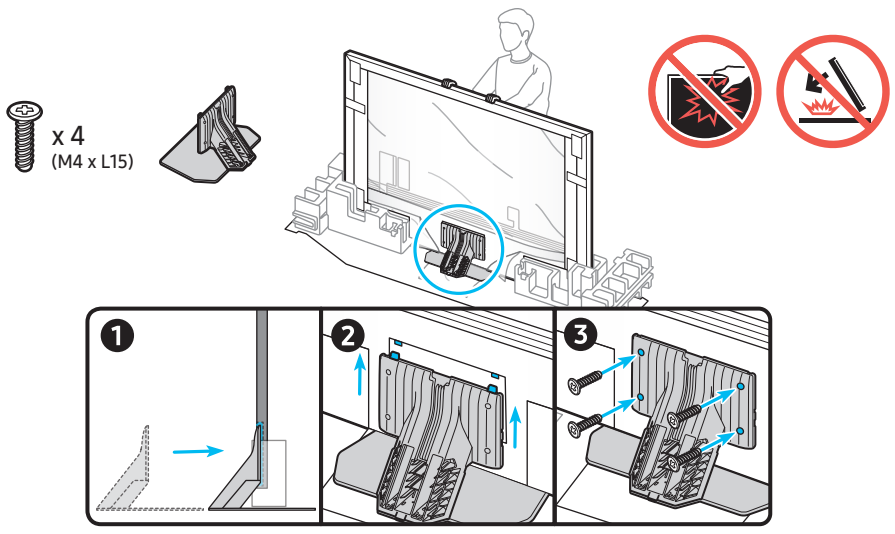

10

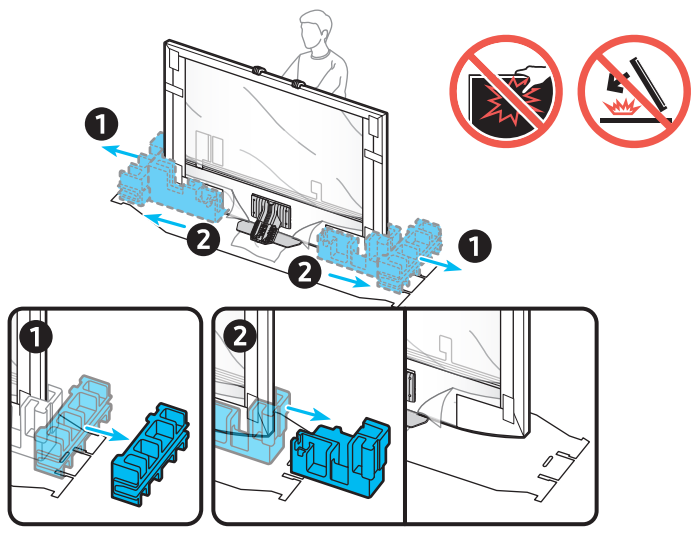

11

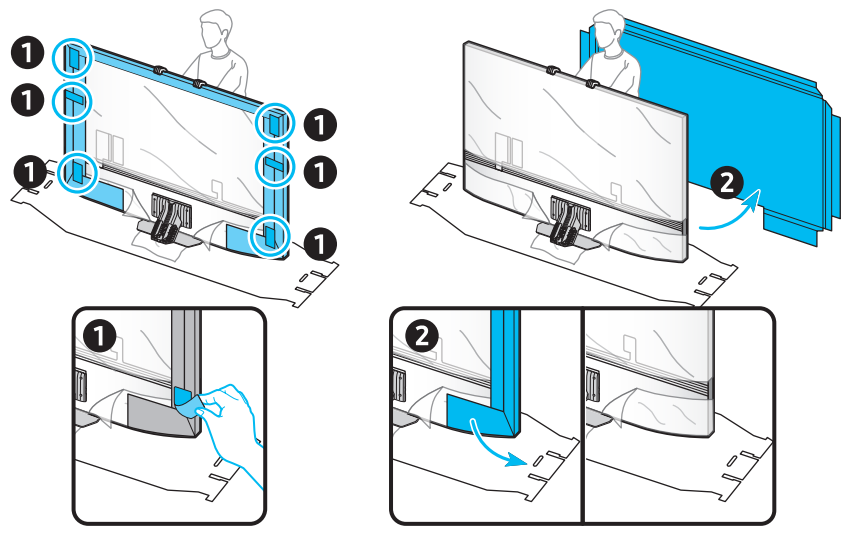

12

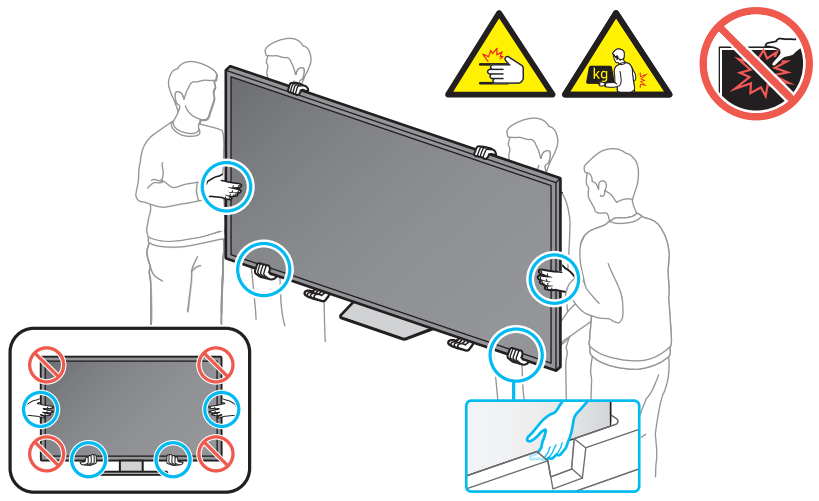

13

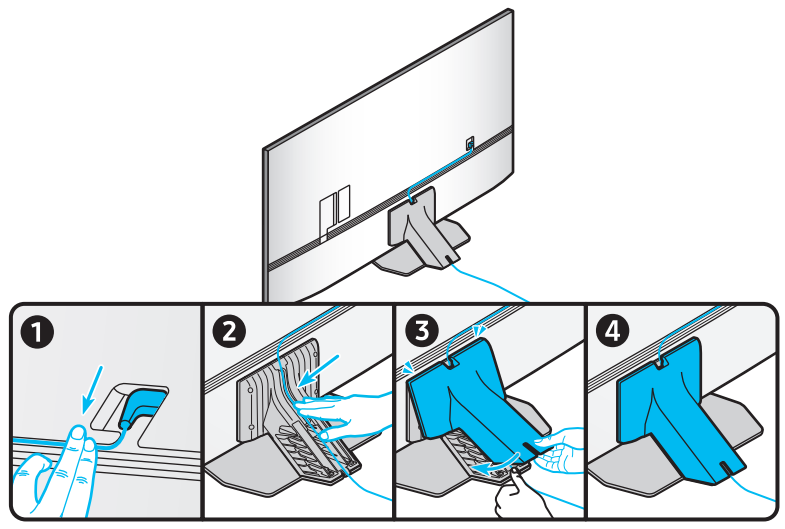

14

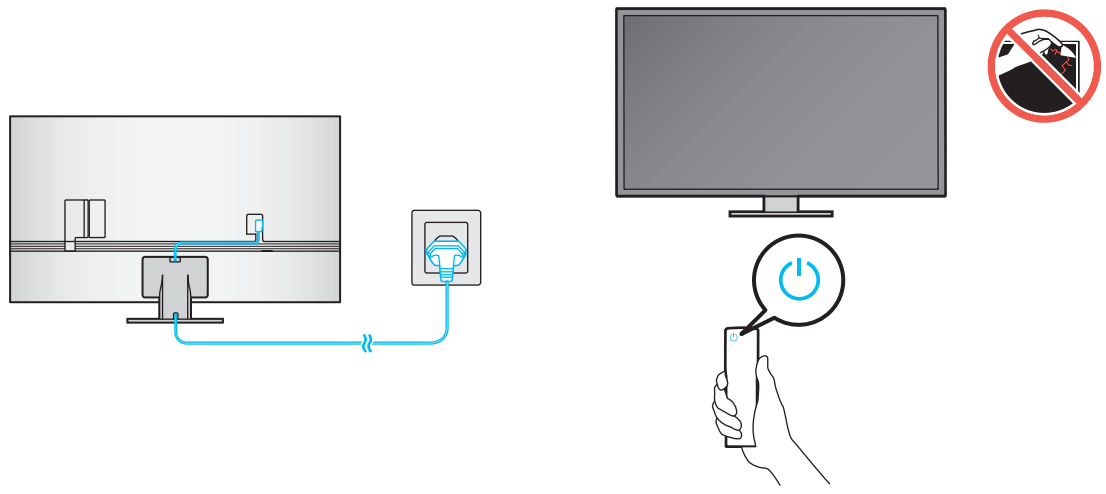

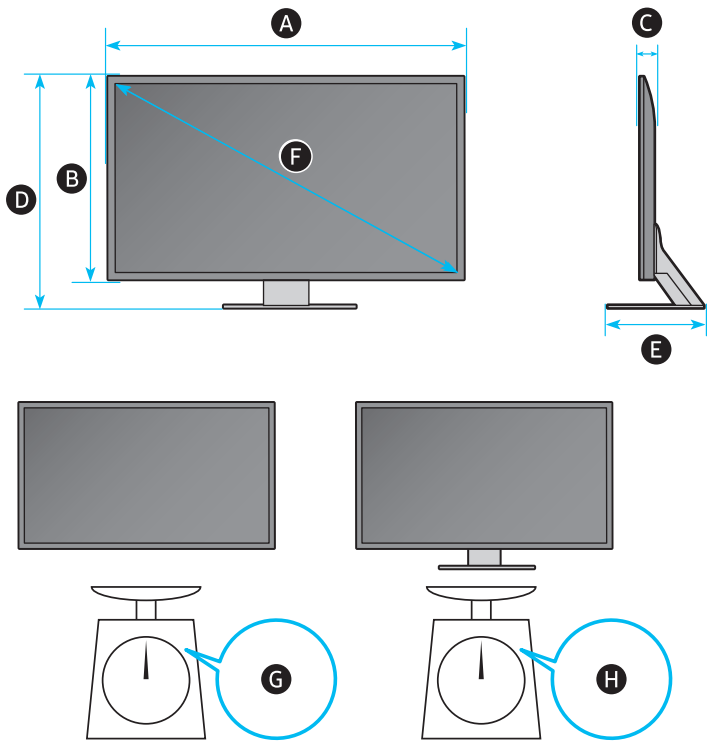

	A	B	C	D	E	F	G	H
98QN9*D 98QN9*F	86.0 inches (2185.1 mm)	49.2 inches (1249.3 mm)	1.2 inches (31.1 mm)	51.4 inches (1305.9 mm)	14.4 inches (364.9 mm)	97.5 inches	135.4 lbs (61.4 kg)	155.6 lbs (70.6 kg)

* : 0~9, A~Z

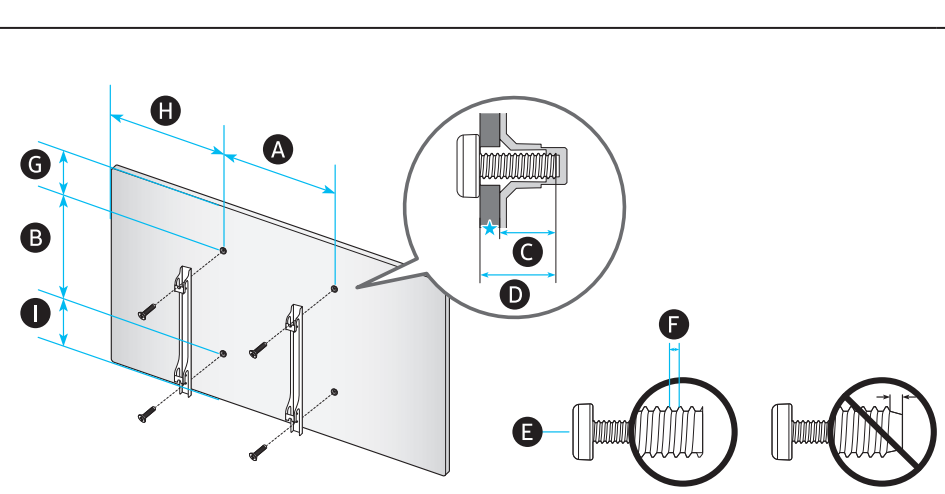

	VESA A x B (mm)	C (mm)	D	E x 4	F (mm)	G (inches)	H (inches)	I (inches)
98QN9*D 98QN9*F	600 x 400	11-13	C + ★	M8	1.25	13.5	31.1	19.8

* : 0~9, A~Z

★ : Wall-Mount Bracket