01

Eaton.com/G4RackPDU

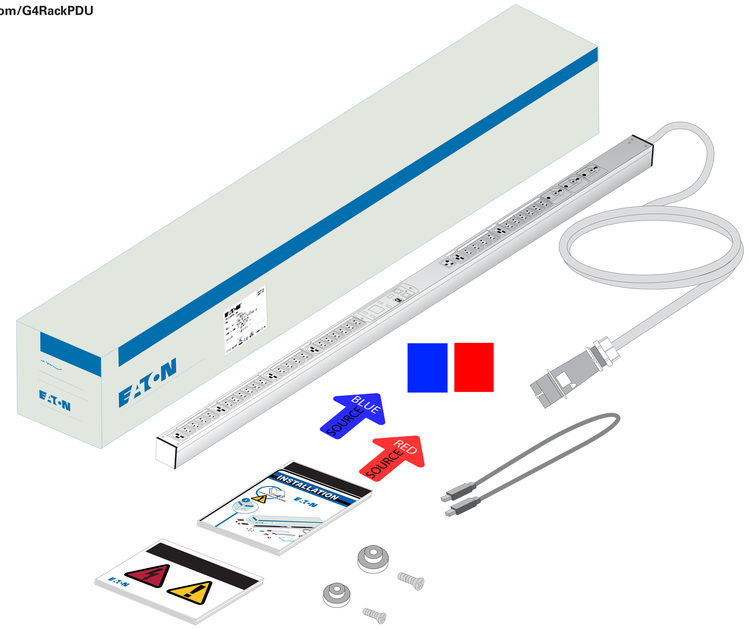

Powering Business Worldwide

02

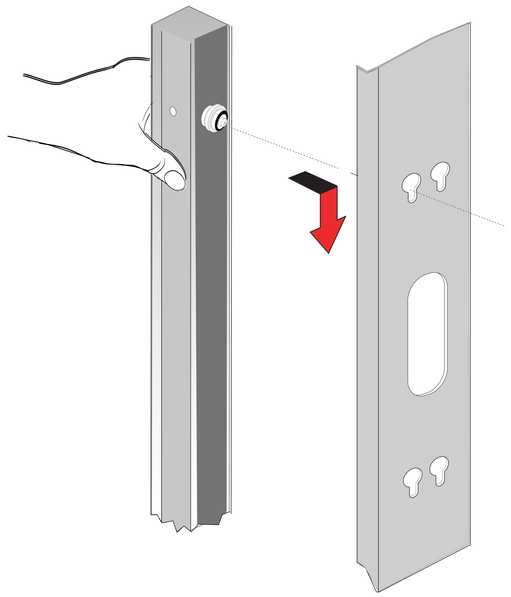

Powering Business Worldwide

03

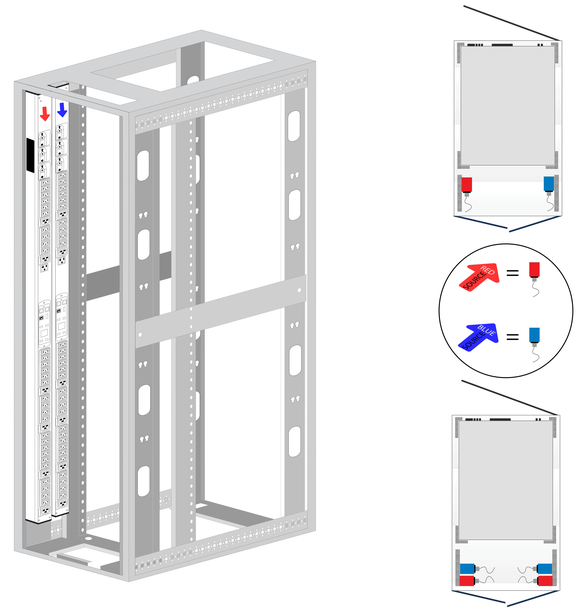

04

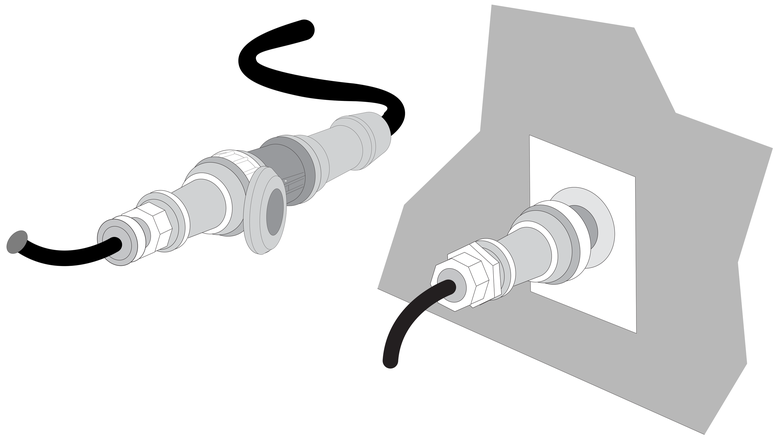

05

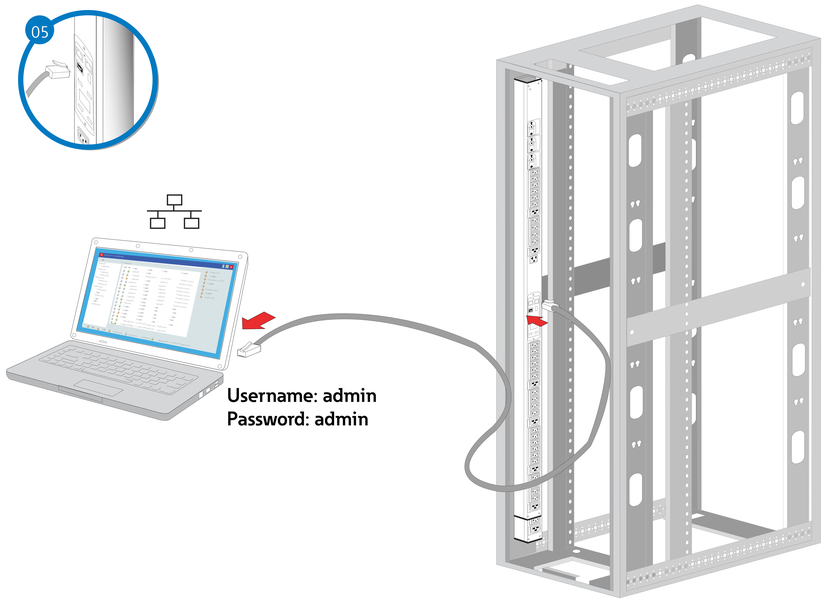

Username: admin
Password: admin

Eaton.com/G4RackPDU

Rack PDU G4

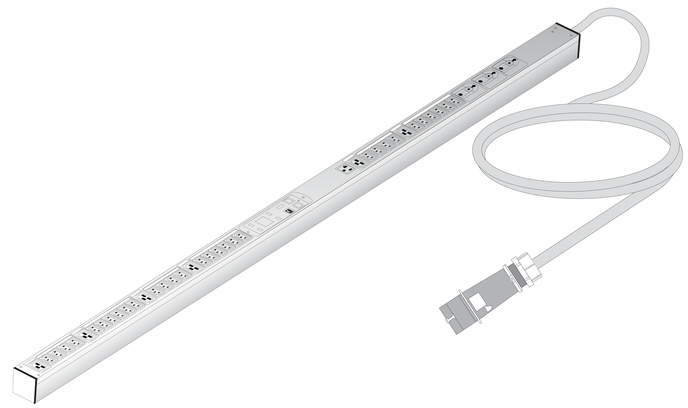

Powering Business Worldwide

Powering Business Worldwide

614-21357
P-164001182-Rev 1