Overview

HP Z8 G5 Workstation Desktop PC



Front View

1. Integrated Front Handle
2. Power Button
3. HDD Activity LED
4. Headphone/microphone combo
5. Front I/O:
   4 SuperSpeed USB Type-A 5 Gbps signaling rate [left-most Type-A ports supports BC1.2 (Battery Charging)]
6. SD Card Reader
7. 2x External 5.25" bay[1]
8. 9.5mm Optical Drive Bay

[1]Only 1 external 5.25" drive configurable from factory

Overview



Internal View

1. 2 Intel® Xeon® Processors (Sapphire Rapids-Scalable)
2. 16 DIMM slots for DDR5 ECC Memory – 8 DIMMs per installed processor
3. •Slot 1: PCIe x16 Gen4
   •Slot 2: PCIe x16 Gen4 - Available ONLY when 2nd processor is installed
   •Slot 3: PCIe x4 Gen3
   •Slot 4: PCIe x16 Gen5
   •Slot 5: PCIe x8 Gen3
   •Slot 6: PCIe x16 Gen3 - Available ONLY when 2nd processor is installed
   •Slot 7: PCIe x4 Gen3
4. 2 PCIe x8 Gen4 configurable with 4 Z Turbo M.2 SSDs
   (2nd slot available ONLY when 2nd processor is installed)
5. 6 SATA ports
6. 3 Internal USB Ports
   (1 single USB2.0 port, 1 dual USB2.0 port, 1 USB3.0 port (for the SD card reader))
7. 4 Internal 3.5" bays
8. 2 External 5.25" bays and Slimline Optical Drive
9. 1 Internal NVMe connector to front removable M.2 carrier

Overview

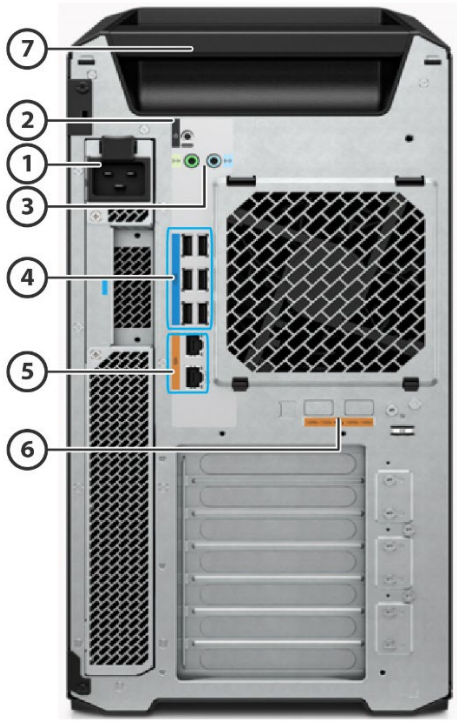

Rear View

1. Choice of 90% Efficient Power Supplies:
   - 1125W @110V or 1450W @200V
   - 1450W @110V or 1700W @200V
2. Rear Power Button
3. Audio in/out
4. 6 SuperSpeed USB Type-A 5 Gbps signaling rate
5. 2 RJ-45 integrated LAN ports (1 GbE AMT, 1GbE)
6. 2 10GbE LAN ports (optional)
7. Integrated Rear Handle

Form Factor

Tower

Operating Systems

Preinstalled:

- Windows 11 Pro for Workstations[2]
- Windows 11 Pro for Workstations (preinstalled with Windows 10 Pro for Workstations Downgrade)[,2,3]
- Ubuntu 22.04 LTS[4]
- HP Linux®-ready (minimal OS ready for customer OS installation)[5]

License Only:

- Red Hat® Enterprise Linux® Desktop Workstation (includes paper license with 1 year support; no preinstalled OS)[6]

Supported:

- Windows 11, version 22H2, 21H2[2]
- Windows 10, version 22H2, 21H2[2]

- Red Hat® Enterprise Linux® Workstation 8 & 9[6]
- SUSE Linux® Enterprise Desktop 15[6]
- Ubuntu 20.04 & 22.04 LTS[5]

Web-supported only:

- Windows 11 Enterprise[2,1]
- Windows 10 Enterprise[2,1]

Operating System Design Behavior:

-Memory and rear chassis fans will spin at lowest achievable speed when unit enters into Sleep Mode. This is by engineering design to cool the higher wattage of DDR5 ECC memory. This allows the memory to stay within thermal specifications.

[1] Windows Enterprise sold separately and requires that customer have an enterprise license from Microsoft.
[2] Not all features are available in all editions or versions of Windows. Systems may require upgraded and/or separately purchased hardware, drivers, software or BIOS update to take full advantage of Windows functionality. Windows is automatically updated and enabled. High speed internet and Microsoft account required. ISP fees may apply and additional requirements may apply over time for updates. See http://www.windows.com.
[3]This system is preinstalled with Windows 10 Pro software and also comes with a license for Windows 11 Pro software and provision for recovery software. You may only use one version of the Windows software at a time. Switching between versions will require you to uninstall one version and install the other version. You must back up all data (files, photos, etc.) before uninstalling and installing operating systems to avoid loss of your data.
[4] Not all features are available in all editions or versions of Ubuntu. Systems may require upgraded and/or separately purchased hardware, drivers, software or BIOS to take full advantage of Ubuntu functionality. Ubuntu may be automatically updated. ISP fees may apply and additional requirements may apply over time for updates.
[5]A certified preloaded version of Ubuntu® 20.04 LTS is available from HP for this platform. Not all features are available in all editions or versions of Ubuntu. Systems may require upgraded and/or separately purchased hardware, drivers, software or BIOS to take full advantage of Ubuntu functionality. Ubuntu may be automatically updated. ISP fees may apply, and additional requirements may apply over time for upgrades.
[6]For detailed Linux® OS/hardware support information, see:
http://www.hp.com/support/linux_hardware_matrix

NOTE: Your product does not support Windows 8 or Windows 7. In accordance with Microsoft's support policy, HP does not support the Windows® 8 or Windows 7 operating system on products configured with Intel® and AMD® 7th generation and forward processors or provide any Windows® 8 or Windows 7 drivers on http://www.support.hp.com. A full list of HP products and the Windows 10 versions tested is available on the HP support website. https://support.hp.com/us-en/document/c05195282

Overview

Processors

Name[1]	Cores	Threads	Frequency (GHz)		Cache (MB)	Max Memory Speed (MT/s)	TDP (W)
			Base Clock Speed	Max Turbo Frequency[2]		1 DIMM per Channel	
Intel® Xeon® Gold 5520+	28	56	2.2	4	52.5	4800	205
Intel® Xeon® Gold 6526Y	16	32	2.8	3.9	37.5	5200	195
Intel® Xeon® Gold 6530	32	64	2.1	4	160	4800	270
Intel® Xeon® Gold 6542Y	24	48	2.9	4.1	60	5200	250
Intel® Xeon® Gold 6548Y+	32	64	2.5	4.1	60	5200	250
Intel® Xeon® Silver 4510	12	24	2.4	4.1	30	4400	150
Intel® Xeon® Silver 4516Y+	24	48	2.2	3.7	45	4400	185
Intel® Xeon® Gold 5415+	8	16	2.9	4.1	22.5	4400	150
Intel® Xeon® Silver 4410Y	12	24	2.0	3.9	30	4000	150
Intel® Xeon® Silver 4514Y	16	32	2	3.4	30	4400	150
Intel® Xeon® Silver 4509Y	8	16	2.6	4.1	22.5	4400	125

Notes:

- 4th Gen Xeon -SP processors all feature Intel® vPro® Technology[3]
- 4th Gen Xeon -SP processors all support Hyper-Threading
- 4th Gen Xeon -SP processors do not offer integrated graphics

[1] Multicore is designed to improve performance of certain software products. Not all customers or software applications will necessarily benefit from use of this technology. Performance and clock frequency will vary depending on application workload and your hardware and software configurations. Intel's numbering, branding and/or naming is not a measurement of higher performance.

[2] Intel Turbo Boost Max (ITBM) performance varies depending on hardware, software and overall system configuration. See http://www.intel.com/technology/turboboost for more information.

[3] Intel vPro® requires Windows 10 Pro 64 bit or higher, a vPro supported processor, vPro enabled chipset, vPro enabled wired LAN and/or Wi-Fi 6E WLAN and TPM 2.0. Some functionality requires additional 3rd party software in order to run. Features of vPro® Essentials and Enterprise vary. See http://intel.com/vpro

Color Black

Convertibility No

Overview

Expansion Slots (see system board section for more details)	•Slot 1: PCIe x16 Gen4 •Slot 2: PCIe x16 Gen4 - Available ONLY when 2nd processor is installed •Slot 3: PCIe x4 Gen3 •Slot 4: PCIe x16 Gen5 •Slot 5: PCIe x8 Gen3 •Slot 6: PCIe x16 Gen3 - Available ONLY when 2nd processor is installed •Slot 7: PCIe x4 Gen3
Expansion Bays (see storage section for more details)	4 internal 3.5" bays (All 4 include acoustic dampening rail assemblies) 2 external 5.25" bays (175mm depth limit) 1 dedicated 9.5mm slim optical disk drive bay
Front I/O	Front I/O: 4 SuperSpeed USB Type-A 5 Gbps signaling rate, 1 headphone/microphone combo, SD card reader (optional). [left-most Type-A ports supports BC1.2 (Battery Charging)]
Internal I/O [5]	3 Internal USB ports and 6 SATA ports.
Rear I/O	Audio in/out, 6 SuperSpeed USB Type-A 5 Gbps signaling rate, 2 RJ-45 integrated LAN ports (1 GbE AMT, 1GbE)
Optional I/O	2 10GbE LAN ports
On-board RAID Support	RAID 0 Striped Array RAID 1 Mirrored Array RAID 10 Striped/Mirrored RAID 5 Parity Array (See System Board section for further details and configuration options)
Chassis Dimensions (H x W x D)	Footprint: H: 17.5" [444.5mm] W: 8.5" [215.9mm] D: 21.7" [551.2mm] (measured to the rear of service panel) Maximum: H: 17.5" [444.5mm] W: 8.5" [215.9mm] D: 21.85" [555.2mm] (measured to the embossment for the rear chassis fans)
Packaged Dimensions	H: 25" (636mm) W: 13.1" (332mm) D: 28.9" (734mm)
Palletization Profile	4 units x 3 layers = 12 units per pallet 1200x1000x2034mm (pallet included)
Rack Dimensions	5U
Weight	Exact weights depend upon configuration (System weight only). Minimum: 22.5kg (49.6lbs.) Typical: 24.3kg (53.7lbs.) Maximum: 33.8kg (74.6lbs.)
Temperature	Operating: 5° to 40°C (40° to 104°F)[1] Non-operating: -40° to 60°C (-40° to 140°F) Above 1524 m (5,000 feet) altitude, the maximum operating temperature is reduced by 1° C (1.8° F) for every 305 m (1,000 feet) increase in elevation Maximum rate of change: 10 °C/hr No direct sustained sunlight [1]40°C has been validated for configs up to 2x 270W CPU (Intel Xeon Gold 6430), 2x NVIDIA® RTX A4000 graphics cards, 8x64GB RAM, 4x 2TB M.2 storage, 2x 2TB HDD storage, and 1125W PSU
Humidity	Operating: Operating: 8% to 85% RH, non-condensing, 35° C maximum wet bulb Non-operating: 8% to 90%, non-condensing, 35° C maximum wet bulb

Overview

Maximum Altitude (non-pressurized)[6]	Operating (with Rotational Hard Drives): 3,048 m (10,000 feet) Operating (with only Solid-State Drives): 5,000 m (16,404 feet) Non-operating: 12,192 m (40,000ft) Note: Above 1524 m (5,000 feet) altitude, maximum operating temperature is reduced by 1° C (1.8° F) per 305 m (1,000 feet) increase in elevation.
Power Supply	Choice of 80 Plus Gold (90% efficiency at 50% load) Power Supplies: • 1125W @110V/15A (Delta Efficiency Report) • 1450W @230V/10A (Delta Efficiency Report)1450W @110V/20A (Delta Efficiency Report) • 1700W @230V/10A (Delta Efficiency Report) Note: Not all configurations are supported on all power supplies. Configuration support depends on total system power budget and having sufficient number or type of PCIe supplemental power connectors. Confirm power supply and configuration support using configurator on hp.com. • 1125W supports up to 600W of auxiliary graphics power (dependent on system configuration) • 1450W supports up to 600W of auxiliary graphics power (dependent on system configuration) • 1700W supports up to 600W of auxiliary graphics power (dependent on system configuration) Note: updating graphics after purchase may require additional power distribution cables and/or auxiliary graphics adapters to support the new graphics configuration.
Workstation ISV Certifications	See the latest list of certifications at http://www.hp.com/united-states/campaigns/workstations/partnerships.html
Chipset	Intel® C741 chipset
Memory	16 DIMM slots, supporting up to 1TB, DDR5 5600 MT/s speed depending on the system configuration

Supported Components

Processors	Factory Configured	Option Kit	Option Kit Part Number	Support Notes
5th Generation Intel® Xeon® Scalable Processors				
Intel® Xeon® Gold 5520+	Y	Y		
Intel® Xeon® Gold 6526Y	Y	Y		
Intel® Xeon® Gold 6530	Y	Y		
Intel® Xeon® Gold 6542Y	Y	Y		
Intel® Xeon® Gold 6548Y+	Y	Y		
Intel® Xeon® Silver 4510	Y	Y		
Intel® Xeon® Silver 4516Y+	Y	Y		
Intel® Xeon® Gold 5415+	Y	Y		
Intel® Xeon® Silver 4410Y	Y	Y		
Intel® Xeon® Silver 4514Y	Y	Y		
Intel® Xeon® Silver 4509Y	Y	Y		
Intel® Xeon® Gold 5520+	Y	Y		
Intel® Xeon® Gold 6526Y	Y	Y		

NOTE 1: When ordering two processors, the second processor must be the same as the first. Intel processor numbers are not a measurement of higher performance. Processor numbers differentiate features within each processor family, not across different processor families.

SATA Hard Drives	Factory Configured	Option Kit	Option Kit Part Number
1TB 7200RPM SATA 3.5in Enterprise HDD	Y	Y	W0R10AA
2TB 7200RPM SATA 3.5in Enterprise HDD	Y	Y	2Z274AA
4TB 7200RPM SATA 3.5in Enterprise HDD	Y	Y	K4T76AA/AT
8TB 7200RPM SATA 3.5in Enterprise HDD	Y	Y	2Z273AA
12TB 7200RPM SATA-6G 3.5in Enterprise HDD	Y	Y	5S461AA

NOTE: Starting November 1, 2023, HP PCs with Windows require Windows to be installed on SSD. HDD can only be configured as additional data drives and not as the boot drive.

PCIe Solid State Drives	Factory Configured	Option Kit	Option Kit Part Number
Z Turbo 512GB 2280 PCIe-4x4 TLC SSD[4]	Y	Y	38T80AA
Z Turbo 512GB 2280 PCIe-4x4 SED OPAL2 TLC M.2 SSD[4]	Y	Y	38T81AA
Z Turbo 512GB 2280 PCIe-4x4 TLC Z8 Kit SSD[5]	N	Y	360H7AA
Z Turbo 512GB 2280 PCIe-4x4 SED OPAL2 TLC M.2 Z8 Kit SSD[5]	N	Y	360H2AA
Z Turbo 1TB 2280 PCIe-4x4 SED OPAL2 TLC M.2 SSD[4]	Y	Y	38T76AA
Z Turbo 1TB 2280 PCIe-4x4 TLC SSD[4]	Y	Y	38T77AA
Z Turbo 1TB 2280 PCIe-4x4 TLC Z8 Kit SSD[5]	N	Y	360H5AA
Z Turbo 1TB 2280 PCIe-4x4 SED OPAL2 TLC M.2 Z8 Kit SSD[5]	N	Y	360H4AA
Z Turbo 2TB 2280 PCIe-4x4 SED OPAL2 TLC M.2 SSD[4]	Y	Y	38T79AA
Z Turbo 2TB 2280 PCIe-4x4 TLC SSD[4]	Y	Y	38T75AA

Supported Components

Z Turbo 2TB 2280 PCIe-4x4 SED OPAL2 TLC M.2 Z8 Kit SSD[5]	N	Y	360H1AA
Z Turbo 4TB 2280 PCIe-4x4 TLC M.2 SSD[2, 4]	Y	Y	5S496AA/AT
Z Turbo 4TB 2280 PCIe-4x4 SED OPAL2 TLC M.2 SSD[2,4]	Y	Y	5S497AA/AT
Z Turbo 4TB 2280 PCIe-4x4 SED OPAL2 TLC M.2 Z8 Kit SSD[2, 5]	N	Y	5S4A0AA
HP Z Turbo Drive Dual Pro			
HP Z Turbo Drive Dual Pro PCIe-4x4 NVMe Carrier[1]	Y	Y	56Q86AA
HP Z Turbo Drive Dual Pro 512GB TLC SSD	Y	N	
HP Z Turbo Drive Dual Pro 1TB TLC SSD	Y	N	
HP Z Turbo Drive Dual Pro 2TB TLC SSD	Y	N	
HP Z Turbo Drive Dual Pro 4TB TLC SSD	Y	N	
HP Z Turbo Drive Quad Pro			
HP Z Turbo Drive Quad Pro PCIe-4x16 NVMe Carrier[1]	Y	Y	7H9Z3AA
HP Z Turbo Drive Quad Pro 512GB TLC SSD	Y	N	
HP Z Turbo Drive Quad Pro 1TB TLC SSD	Y	N	
HP Z Turbo Drive Quad Pro 2TB TLC SSD	Y	N	
HP Z Turbo Drive Quad Pro 4TB TLC SSD	Y	N	
Intel® Virtual RAID on CPU (Intel® VROC) for NVMe			
Intel VROC NVMe SSD Premium Ctlr Module[3]	N	Y	3FJ81AA
Intel VROC NVMe SSD Standard Ctlr Module[2]	N	Y	3FJ80AA

Note 1: Kit includes carrier and heatsink. Requires separate purchase of Z Turbo PCIe 4x4 M.2 SSD modules.
Note 2: Enables RAID 0, 1 & 10
Note 3: Enables RAID 0, 1 & 10 plus RAID 5 with write hole closure options
Note 4: Does not include a heatsink.
Note 5: Includes a heatsink.

NOTE: Internal M.2 PCIe SSDs are installed using HP Personality Card (up to 2 Personality Cards per system). Each Personality Card can support two M.2 drives.

NOTE: For storage drives, GB = 1 billion bytes. TB = 1 trillion bytes. Actual formatted capacity is less. Up to 36GB of system disk (for Windows) is reserved for system recovery software.

Graphics		Factory Configured	Option Kit	Option Kit Part Number	Supported # of cards
Graphics Cable Adapters	HP DisplayPort To VGA Adapter	N	Y	AS615AA/AT	
	HP DisplayPort To VGA Adapter	N	Y	F7W97AA	
	HP DisplayPort to HDMI Adapter	Y	Y	2JA63AA	
	HP (Bulk 12) miniDP-to-DP Adapter Cables	N	Y	2KW87A6	
	HP Single miniDP-to-DP Adapter Cable	Y	Y	2MY05AA	
	HP miniDP-to-DP Adapter (2-pack)	Y	N		
	HP miniDP-to-DP Adapter (4-pack)	Y	N		
	HP miniDP-to-DP Adapter (8-pack)	Y	N		
	HP DisplayPort To DVI Adapter (Bulk 90)	N	Y	FH973A6	
	NVIDIA NVLink 3-Slot Bridge	Y	Y	340L3AA	
	NVIDIA 3D Stereo Bracket	N	Y	K0A25AA	
	NVIDIA® RTX 6000 Ada 48GB	Y	Y	79C23AA/AT	2

Supported Components

Ultra High-End Graphics	NVIDIA® RTX 6000 Ada 48 GB 4DP w/NVIDIA Omniverse Enterprise Graphics	N	Y	9X3E1AA	2
	NVIDIA® RTX 5880 Ada 48 GB 4DP Graphics	Y	Y	9Z7P5AA	2
	NVIDIA® RTX PRO 5000 Blackwell 48GB [1]	Y	Y	B11F1AA	
	NVIDIA® RTX 5000 Ada 24GB	Y	Y	8D6B6AA	2
	NVIDIA® Quadro® Sync II	N	Y	1WT20AA	
	NVIDIA® RTX PRO Sync Card[2]	N	Y	C08YVAA	1
	AMD® Radeon™ Pro W7900 48GB	Y	Y	8F699AA	1
High-End Graphics	NVIDIA® RTX PRO 4500 Blackwell 32GB [1]	Y	Y	B11F2AA	2
	NVIDIA® RTX 4500 Ada 24 GB	Y	Y	8D6C1AA	2
	NVIDIA® RTX A4500 20GB	Y	Y	5S458AA/AT	2
	NVIDIA® RTX PRO 4000 Blackwell 24GB [1]	Y	Y	B11F3AA	2
	NVIDIA® RTX 4000 Ada 16GB	Y	Y	8D6B7AA	2
	NVIDIA® RTX A4000 16GB	Y	Y	20X24AA/AT	2
Midrange Graphics	NVIDIA® RTX 2000 Ada 16 GB	Y	Y	8D6B8AA	2
	NVIDIA® RTX 2000E Ada 16GB	Y	N		1
	NVIDIA® Long-Life RTX A2000E 12GB	Y	N		2
	NVIDIA® A1000 8GB	Y	Y	AV8J4AA	2
	NVIDIA® Long-Life T1000E 8GB	Y	Y	6V9V4AA/AT	2
	AMD® Radeon™ Pro W7600 8GB	Y	Y	8D6B9AA	2
Entry Graphics	NVIDIA® A400 4GB	Y	Y	AV8J3AA	2
	NVIDIA® T400E 4 GB 4mDP Graphics	Y	Y	A4HP3AA	2
	AMD® Radeon™ RX 6400 4GB	Y	Y	6Q3U4AA/AT	1
	Intel Arc Pro A40 6GB	Y	Y	6E3Y8AA	1

Note 1: NVIDIA driver support for Ubuntu on the Blackwell series is currently unavailable.
Note 2: The NVIDIA® RTX™ PRO Sync Card is the next generation of the NVIDIA® Quadro® Sync II, offering the same functionality and compatibility.

Memory

	Factory Configured	Option Kit	Option Kit Part Number	Support Notes
32GB (2x16GB) DDR5 5600 DIMM ECC REG Memory	Y	N		
64GB (4x16GB) DDR5 5600 DIMM ECC REG Memory	Y	N		1
64GB (2x32GB) DDR5 5600 DIMM ECC REG Memory	Y	N		
128GB (8x16GB) DDR5 5600 DIMM ECC REG Memory	Y	N		1
128GB (4x32GB) DDR5 5600 DIMM ECC REG Memory	Y	N		1
256GB (16x16GB) DDR5 5600 DIMM ECC REG Memory	Y	N		2
256GB (8x32GB) DDR5 5600 DIMM ECC REG Memory	Y	N		1
256GB (4x64GB) DDR5 5600 DIMM ECC REG Memory	Y	N		1
512GB (16x32GB) DDR5 5600 DIMM ECC REG Memory	Y	N		2
512GB (8x64GB) DDR5 5600 DIMM ECC REG Memory	Y	N		1
1TB (16x64GB) DDR5 5600 DIMM ECC REG Memory	Y	N		2
After Market Options				
16GB (1x16GB) DDR5 5600 DIMM ECC REG Memory	Y	Y	340K1AA	
32GB DDR5 (1x32GB) 5600 DIMM ECC REG Memory	N	Y	340K2AA	

Supported Components

64GB DDR5 (1x64GB) 5600 DIMM ECC REG Memory	N	Y	340K3AA

Note 1: Memory configuration is available for both single and dual CPU configurations.
Note 2: Memory configuration is only available with dual CPU configuration.
Note: The CPUs determine the speed at which the memory is clocked. For example, if a 5600MHz capable CPU is used in the system, the maximum speed the memory will run at is 5600MHz regardless of the specified speed of the memory.

Multimedia and Audio Devices	Factory Configured	Option Kit	Option Kit Part Number
Integrated Realtek ALC 3205-CG	Y	N	

Optical and Removable Storage	Factory Configured	Option Kit	Option Kit Part Number
HP CRU QX428 Removable with 415mm Cable Frame/Carrier[1,4]	Y	N	
HP CRU Secure High Performance Storage Module with 4TB M.2 SSD[5]	Y	N	-
HP DX175 Removable HDD Frame/Carrier[2]	Y	Y	1ZX71AA
HP DX175 Removable HDD Spare Carrier[2]	N	Y	1ZX72AA
HP CRU Secure High Performance Storage Module with 2TB M.2 SSD[3]	Y	Y	56Q87AA
HP CRU Secure High Performance Storage Module with 1TB M.2 SSD[3]	Y	Y	56Q88AA
HP CRU Secure High Performance Storage Module with 512GB M.2 SSD[3]	Y	Y	56Q89AA
HP 9.5mm Slim DVD-ROM Drive	Y	Y	K3R63AA
HP 9.5mm Slim BDXL Blu-Ray Writer Drive	Y	Y	K3R65AA
HP 9.5mm Slim SuperMulti DVD Writer	Y	Y	K3R64AA

Note 1: Optional separate purchase of HP CRU Secure High Performance Storage (SHIPS) Module(s).
Note 2: Only supports 4TB or lower capacity HDDs.
Note 3: HP CRU SHIPS Module Kit contains select M.2 SSD for install into a factory configured front removeable storage carrier (HP CRU QX428 Frame/Carrier).
Note 4: Front QX428 carrier supports hot-swap capability with front removable drives
Note 5: Some double-sided M.2 SSDs may throttle during heavy use, resulting in lower read and write speeds. This behavior is by design in order to protect the SSD from over-heating.

Networking and Communications	Factory Configured	Option Kit	Option Kit Part Number
HP Dual Port 10GbE NIC G2	Y	Y	360K6AA
Intel® X550 10GBASE-T Dual Port NIC	Y	Y	1QL46AA
Intel® I225-T1 Single Port 2.5GbE PCIe NIC	Y	Y	406L9AA
Intel® Ethernet I350-T4 4-Port 1Gb NIC	N	Y	W8X25AA
Allied Telesis AT-2914SX/LC-901 1GB LC Fiber NIC	Y	Y	1C7Q2AA
Allied Telesis AT-2911T/2-901 Dual Port 1GbE NIC	Y	Y	6E3Y9AA/AT
NVIDIA® Mellanox® ConnectX-6 DX Dual Port 10/25GbE SFP28 NIC [1]	Y	Y	436M8AA
HP 10GbE SFP+ SR/SW LC Fiber Optic Transceiver	Y	Y	860T8AA

Supported Components

HP 25GbE SFP28 LC Fiber Optic Transceiver	Y	Y	860T9AA
Intel AX210 Wi-Fi 6E non-vPro + Bluetooth® 5.2 wireless card with External Antenna WLAN	Y	Y	340L7AA

Note1: Transceivers sold separately. You must have a transceiver installed to connect this card to a network. The NVIDIA Mellanox ConnectX-6 only supports SFP28.

HP Remote System Controller	Factory Configured	Option Kit	Option Kit Part Number
HP Remote System Controller*	Y	Y	7K6D7AA
HP Remote System Controller Main Board Adapter*	Y	Y	7K6D8AA
HP Z4/Z6/Z8 G4 / ZCentral 4R Remote System Controller Cable Adapter	Y	Y	7K6E5AA
HP Integrated Remote System Controller	Y	Y	7K6D9AA
HP Remote System Controller for Universal KVM	N	Y	7K7N2AA

*Separate purchase of kit 7K6E5AA HP Z4/Z6/Z8 G4/ZCentral 4R Remote System Controller Cable Adapter is required. Kit 7K6E5AA includes the PCIe bracket required to mount the bulkhead PCA for either 7K6D7AA or 7K6D8AA when using with the HP Z4/Z6/Z8 G4, ZCentral 4R, or Z8G5, which do not have a dedicated bulkhead knockout for the bulkhead PCA adapter.

Racking and Physical Security	Factory Configured	Option Kit	Option Kit Part Number
HP Z640/Z840/Z8 G4 Rail Rack Kit	N	Y	2FZ77AA/AT
HP Z8 Rack Rail Upgrade Kit	N	Y	2FZ76AA/AT

Input Devices	Factory Configured	Option Kit	Option Kit Part Number
HP 320K Wired Keyboard	Y	Y	9SR37AA/ET/UT
HP 125 Wired Keyboard	Y	Y	266C9AA/ET/UT
HP 975 USB+BT Dual-Mode Wireless Keyboard	N	Y	3Z726AA/ET/UT
HP 455 Programmable Wireless Keyboard	N	Y	4R177AA/ET/UT/A6
HP Wired Desktop 320MK Mouse and Keyboard	N	Y	9SR36AA/ET/UT
HP 655 Wireless Keyboard and Mouse Combo	N	Y	4R009AA/ET/UT/A6
HP Wired 320M Mouse	Y	Y	9VA80AA/ET/UT
HP Creator 935 Black Wireless Mouse	N	Y	1D0K8AA/ET/UT
HP 128 LSR Wired Mouse	Y	Y	265D9AA/ET/UT
HP 125 Wired Mouse	N	Y	265A9AA/ET/UT
HP Business Slim Smartcard Keyboard	Y	Y	Z9H48AA/AT

Note: Keyboard and Mouse are optional or add on features.

Other Hardware	Factory Configured	Option Kit	Option Kit Part Number

Supported Components

HP C13 1.83m Power Cord Kit (halogen-free)	Y	N	
HP Z8 1450W C19 2.5m Power Cord Kit[3,**]	N	Y	6Z9V1AA
HP 2.5in to 3.5in HDD Adapter Kit	N	Y	J5T63AA/A6
HP Internal Serial+PS/2 Port	Y	Y	56Q78AA
HP Dual TBT4 PCIe x4 Low Profile Card[5]	Y	Y	340L1AA
HP USB 2.0 Type-A Port Adapter Kit[4]	Y	Y	79C24AA
HP 2.5in HDD/SSD 2-in-1 Optical Bay Bracket	N	Y	K4T74AA
HP Optical Bay HDD Mounting Bracket[1]	N	Y	NQ099AA
HP SD 4 Card Reader Zx G4	Y	N	
HP C13 1.83m Power Cord Kit[2,*]	N	Y	6Z1T9AA
C13-C14 2.0m 15A 100-127V Countries Straight Desktop Power Cord	Y	Y	8R881AA
C13-C14 2.0m 10A 200-240V Countries Straight Desktop Power Cord	Y	Y	8R882AA

*Does not support HP Z8 G5 1450W PSU.
**Does not support HP Z8 G5 1125W PSU.

Note 1: NQ099AA HP Optical Bay HDD Mounting Bracket is required as a separate purchase for HDD option kits installed into an external bay.
Note 2: 6Z1T9AA is only for 1125W PSU Z8 G5.
Note 3: 6Z9V1AA is only for 1450W PSU Z8 G5.
Note 4: The USB 2.0 Type-A Port Adapter Kit has a single USB 2.0 type A connector.
Note 5: Available in July 2023

Software	**Factory Configured**	**Option Kit**	**Support Notes**
HP Anyware	Y	N	
HP Performance Advisor	Y	N	1
HP PC Hardware Diagnostics UEFI (Windows OS only)	Y	N	2
HP PC Hardware Diagnostics Windows	Y	N	
HP Wolf Security	Y	N	3
HP Notifications	Y	N	
HP Desktop Support Utility	Y	N	
HP Documentation	Y	N	
myHP	Y	N	
HP Easy Clean	Y	N	
Kingsoft WPS Office	Y	N	4
Z by HP Data Science Stack Manager	Y	N	5, 6
WSL2/Ubuntu Data Science Stack	Y	N	5
HP Image Assistant	N	N	
HP Support Assistant	N	N	
HP Smart Health	N	N	
Wolf Pro Security			7

Supported Components

Note 1: Supported with Windows only. Also available as a free download from http://www.hp.com/go/performanceadvisor
Note 2: Windows OS only
Note 3: Not available in Russia
Note 4: Not available in China
Note 5: Only available with NVIDIA® graphics
Note 6: Only available with Ubuntu
Note 7: HP Wolf Pro Security Edition is available preloaded on select SKUs, and, depending on the HP product purchased, includes a license with a term length communicated to you at purchase and in your order confirmation email. The HP Wolf Pro Security Edition software is licensed under the license terms of the HP Wolf Security Software - End-User license Agreement (EULA) that can be found at: https://support.hp.com/us-en/document/ish_3875769-3873014-16 as that EULA is modified by the following: 7. Term. Unless otherwise terminated earlier pursuant to the terms contained in this EULA, the license for the HP Wolf Pro Security Edition is effective upon 4 months after the date the HP Product was shipped by HP and will continue for the term communicated to you at purchase and in your order confirmation email ("Initial Term"). At the end of the Initial Term you may either (a) purchase a renewal license for the HP Wolf Pro Security Edition from HP.com, HP Sales or an HP Channel Partner, or (b) continue using the standard versions of HP Sure Click and HP Sure Sense at no additional cost with no future software updates or HP Support. Notwithstanding the foregoing, the license shall expire no later than one year after the fixed term of the subject license ends.
s

Operating Systems

Windows 11 Pro for Workstations[1,2]

Windows 11 Pro for Workstations (preinstalled with Windows 10 Pro for Workstations Downgrade)[1,2,3]

Ubuntu 22.04 LTS[4]

HP Linux®-ready

[1] Windows Enterprise sold separately and requires that customer have an enterprise license from Microsoft.
[2] Not all features are available in all editions or versions of Windows. Systems may require upgraded and/or separately purchased hardware, drivers, software or BIOS update to take full advantage of Windows functionality. Windows is automatically updated and enabled. High speed internet and Microsoft account required. ISP fees may apply and additional requirements may apply over time for updates. See http://www.windows.com.
[3]This system is preinstalled with Windows 10 Pro software and also comes with a license for Windows 11 Pro software and provision for recovery software. You may only use one version of the Windows software at a time. Switching between versions will require you to uninstall one version and install the other version. You must back up all data (files, photos, etc.) before uninstalling and installing operating systems to avoid loss of your data.
[4] Not all features are available in all editions or versions of Ubuntu. Systems may require upgraded and/or separately purchased hardware, drivers, software or BIOS to take full advantage of Ubuntu functionality. Ubuntu may be automatically updated. ISP fees may apply and additional requirements may apply over time for updates.

NOTE: Your product does not support Windows 8 or Windows 7. In accordance with Microsoft's support policy, HP does not support the Windows® 8 or Windows 7 operating system on products configured with Intel® and AMD® 7th generation and forward processors or provide any Windows® 8 or Windows 7 drivers on http://www.support.hp.com. A full list of HP products and the Windows 10 versions tested is available on the HP support website. https://support.hp.com/us-en/document/c05195282

Supported Components

HP BIOS

Key features of the HP BIOS include:

- Deployment and manageability – HP BIOS provides several technologies that help integrate the HP Z8 G5 Workstation into the enterprise, such as PXE, remote recovery, remote configuration, remote control, and BIOS (F10) Setup support for 15 languages.
- Network firmware updates –Update your BIOS via the cloud or standardize on a BIOS version hosted on an Enterprise network.
- Stability – HP BIOS supports the HP stable product roadmap by releasing only critical BIOS changes to the factory and advanced change notification.
- Class 3 UEFI specification version 2.7B
- Absolute Persistence agent – For tracking and tracing services, available in select countries, separate software and purchase of a subscription is required.
- Thermal and power management – The HP BIOS provides and enables thermal and power management technologies so component temperatures are managed for high reliability and to assist in operating the HP Workstation computer in any enterprise environment.
- Acoustic performance – Industry leading acoustic emissions across the range of operating conditions.
- Serviceability – HP BIOS provides diagnostic and detailed service information.
- Upgrades and recovery – HP BIOS provides numerous ways to upgrade HP Workstation computers, including BIOS updates from within Windows (HP Firmware Update and Recovery), Capsule update, HP Client Manager, and fail-safe recovery. In addition, the HP BIOS Configuration Utility enables replication of BIOS settings within Windows while the Replicated Setup feature provides the same capability within BIOS (F10) Setup. The BIOS Configuration Utility is available from the HP support website.
- HP BIOS uses PKI signing of the BIOS for trusted BIOS upgrades and recovery. Additional HP BIOS Features:
    - Power-On password – Helps prevent an unauthorized user from powering on the system.
    - Administrator password – Also known as the BIOS Setup password, this helps prevent unauthorized changes to the system configuration. If the administrator password is not known, the BIOS cannot be updated and changes cannot be made to BIOS settings using BIOS Setup or under the OS.
    - S4/S5 Maximum Power Savings setting supports EU Lot6 requirement and allows the computer to power down below 0.5W in S4/S5 (when turned off). When S4/S5 Maximum Power Savings feature is enabled below features are turned off:
        - Power to expansion connectors / slots
        - Most Wake events other than power buttons and WOL (Wake on LAN supported by embedded Lan controller under S4/S5 Maximum Power Saving Enabled)
        - USB charging ports

HP Sure Start Gen7

- BIOS Integrity checking – Sure Start protection ensures that only trusted BIOS code is executed and not rootkits, viruses and malware. Verification is done upon boot up, shutdown and while the system is on.
- Sure Start is set by default to automatically repair the BIOS if corrupted or compromised but is policy driven for better manageability. Start is set by default to automatically repair the BIOS if corrupted or compromised but is policy driven for better manageability.
- Protecting beyond BIOS – Integrity checking and repair is extended to other data that should be protected such as network configuration parameters, platform specific information (i.e. system IDs), secure boot credentials, and other code the system needs to boot.
- Audit enabled – System Audit via Sure Start Event Logs capture data such as incident, repair date and time for troubleshooting and investigating.

SOFTWARE COMPONENTS AND APPLICATIONS WITH WINDOWS

BIOS
HP BIOSphere Gen6[13]
HP DriveLock & Automatic DriveLock
BIOS Update via Network
Master Boot Record Security
Power On Authentication
Absolute Persistence Module[23]
Pre-boot Authentication
HP Wireless Wakeup

Software
HP Desktop Support Utility
HP Performance Advisor[1]
HP Privacy Settings
HP Notifications
myHP
HP Services Scan[25]

Manageability Features
HP Driver Packs[2]
HP System Software Manager (SSM)
HP BIOS Config Utility (BCU)
HP Client Catalog
HP Manageability Integration Kit Gen6[3]

Client Security Software
HP Wolf Security (Including HP Sure Click & HP Sure Sense)[22]
HP Pro Wolf Security (Including Credential Manager)[18]
HP Client Security Manager Gen 7[4]
HP Sure Run[9]
HP Sure Recover[10]
HP Power On Authentication
Microsoft Defender[7]

Security Management
HP Security Update Service (SUS)
Secure Erase[16]
TPM 2.0 Embedded Security Chip(Common Criteria EAL4+ Certified)[24]
SATA port disablement (viaBIOS)
Serial, USB enable/disable (viaBIOS)
Power-on password (viaBIOS)
Setup password (viaBIOS)
Support for chassis padlocks and cable lock devices
Integrated hood sensor0
HP Sure Start Gen4[8]

[1] HP Performance Advisor Software - HP Performance Advisor is ready to help you get the most out of your HP Workstation from day one—and every day after. Learn more or download at: http://hp.com/PerformanceAdvisor

[2] HP Driver Packs not preinstalled, however available for download at http://www.hp.com/go/clientmanagement.

[3] HP Manageability Integration Kit can be downloaded from https://ftp.ext.hp.com/pub/caps-softpaq/cmit/HPMIK.html

[4] HP Client Security Manager Gen7 requires Windows and is available on the select HP PCs.

Supported Components

[7] Microsoft Defender Opt in and internet connection required for updates.

[8] HP Sure Start Gen 7 is available on select HP PCs and workstations. See product specifications for availability.

[9] HP Sure Run Gen5 is available on select Windows 11 based HP Pro, Elite and Workstation PCs with select Intel® or AMD processors

[10] HP Sure Recover Gen4 is available on select HP PCs and requires Windows 10 and an open network connection. You must back up important files, data, photos, videos, etc. before using HP Sure Recover to avoid loss of data. Network based recovery using Wi-Fi is only available on PCs with Intel Wi-Fi Module

[13] HP BIOSphere Gen6 features may vary depending on the platform and configurations.

[16] Secure Erase - For the methods outlined in the National Institute of Standards and Technology Special Publication 800-88 "Clear" sanitation method. HP Secure Erase does not support platforms with Intel® Optane.

[18] HP Wolf Pro Security Edition is available preloaded on select SKUs, and, depending on the HP product purchased, includes a license with a term length communicated to you at purchase and in your order confirmation email. The HP Wolf Pro Security Edition software is licensed under the license terms of the HP Wolf Security Software - End-User license Agreement (EULA) that can be found at: https://support.hp.com/us-en/document/ish_3875769-3873014-16 as that EULA is modified by the following: 7. Term. Unless otherwise terminated earlier pursuant to the terms contained in this EULA, the license for the HP Wolf Pro Security Edition is effective upon 4 months after the date the HP Product was shipped by HP and will continue for the term communicated to you at purchase and in your order confirmation email ("Initial Term"). At the end of the Initial Term you may either (a) purchase a renewal license for the HP Wolf Pro Security Edition from HP.com, HP Sales or an HP Channel Partner, or (b) continue using the standard versions of HP Sure Click and HP Sure Sense at no additional cost with no future software updates or HP Support. Notwithstanding the foregoing, the license shall expire no later than one year after the fixed term of the subject license ends.

[22] HP Wolf Security for Business requires Windows 10 or higher, includes various HP security features and is available on HP Pro, Elite, RPOS and Workstation products. See product details for included security features

[23] Absolute agent is shipped turned off, and will be activated when customers activate a purchased subscription. Subscriptions can be purchased for terms ranging multiple years. Service is limited, check with Absolute for availability outside the U.S. The Absolute Recovery Guarantee is a limited warranty. Certain conditions apply. For full details visit: http://www.absolute.com/company/legal/agreements/computrace-agreement. Data Delete is an optional service provided by Absolute Software. If utilized, the Recovery Guarantee is null and void. In order to use the Data Delete service, customers must first sign a Pre-Authorization Agreement and either obtain a PIN or purchase one or more RSA SecurID tokens from Absolute Software.

[24] Firmware TPM is version 15.21. Hardware TPM is v2.0.

[25] HP Services Scan is provided with Windows Update on select products and will check entitlement on each hardware device to determine if an HP TechPulse-enabled service has been purchased, and will download applicable software automatically. HP TechPulse is a telemetry and analytics platform that provides critical data around devices and applications. For full system requirements or to disable this feature, please visit http://www.hpdaas.com/requirements . Not applicable in China.

System Board

System Board Form Factor	Approximately 415.04mm x 386.08mm (16.34 x 15.20 inches)
Processor Socket	Dual LGA-4677
CPU Bus Speed	DMI Gen3 x 8 lanes. 3 UPI x24 interconnects between CPUs that operate at 16GT/s
Chipset	Intel C741 Emmitsburg PCH
Super I/O Controller	Nuvoton SIO21
Memory Expansion Slots	16 DDR5 memory slots (only 8 DDR5 memory slots with single CPU installed)
Memory Type Supported	DDR5, RDIMM (Registered) ECC
Memory Modes	Non-Interleaved for single channel. Interleaved when multiple channels are populated
Memory Speed Supported	Max memory speed is processor-dependent, refer to processor table for more details: 5600 MT/s DDR5 or 4800MT/s DDR5 or 4400MT/s DDR5 or 4000MT/s DDR5
Memory Protection	ECC
Maximum Memory	1TB
Memory Configuration (Supported)	16GB, 32GB and 64GB RDIMMs are supported. 64GB RDIMMs cannot be mixed with other module capacities in the same system.
NVDIMM Memory	No
PCI Express Connectors	CPU0 Standard PCIe Slots: • 1 PCI Express Gen5 slot x16 mechanical/ x16 electrical (full height, full length) • 1 PCI Express Gen4 slot x16 mechanical/ x16 electrical (full height, full length) • 1 PCI Express Gen3 slot x8 mechanical/ x8 electrical (full height, full length) • 1 PCI Express Gen3 slot x4 mechanical/ x4 electrical (full height, full length) CPU0 Personality Slots: • 1 PCI Express Gen4 slot x8 mechanical/ x8 electrical (full height, half length) (supports two x4 M.2 devices per personality slot) CPU0 Other PCIe Connections • 1 Front NVMe Storage SlimSAS PCIe Gen4 x8 (supports two x4 M.2 devices via QX428) • 1 10GbE (PCIe Gen3 x4) CPU 1 Standard PCIe Slots: • 1 PCI Express Gen4 slot x16 mechanical/ x16 electrical (full height, full length) • 1 PCI Express Gen3 slot x16 mechanical/ x16 electrical (full height, full length) CPU1 Personality Slots: • 1 PCI Express Gen4 slot x8 mechanical/ x8 electrical (full height, half length) (supports two x4 M.2 devices per personality slot) PCH Standard PCIe Slots: • 1 PCI Express Gen3 slot x4 mechanical/ x4 electrical (full height, full length)
Supported Drive Interfaces	**Integrated RAID**

		RAID 0	RAID 1	RAID 5	RAID 10
Standard Factory Configuration	NVMe	On-Board Boot (Max 2)	On-Board Boot	-	-
	SATA	-	-	-	-

System Technical Specifications

	Supported Operating Systems: Windows 11				
Factory Services	NVME	Boot & Data All Supported Locations	Boot & Data All Supported Locations	Boot & Data All Supported Locations	Boot & Data All Supported Locations
	SATA	Boot & Data All Supported Locations	Boot & Data All Supported Locations	Boot & Data All Supported Locations	Boot & Data All Supported Locations
	Supported Operating Systems: Windows 11, RHEL 8.6 and later, SLE 15 SP4 and later, and Ubuntu 20.04 or later				

Note: HP only supports VROC (Intel) and AMD-RAIDXpert2 (AMD) RAID configurations
Note: Customers may use the built-in Linux software RAID. See details at: www.hp.com/support/Linux_hardware_matrix

	SATA	Number of SATA ports: 6 Intel® SATA controller: secondary SATA
	Integrated Graphics	No
	Network Controller	Intel WGI210AT and WGI219LM. WGI219LM LOM provides Management capabilities: WOL, PXE 2.1, DASH 1.1, iSCSI and AMT
	External SATA (eSATA)	No
	Serial	1 internal header (requires optional Serial Port Adapter Kit)
	2nd Serial	No
	HD Integrated Audio	Yes
USB Connector(s)	**Front**	Front I/O: 4x USB 3.1 Gen1 Type-A (left-most port supports Battery Charging 1.2) • Charging USB Type-A port provides 1.5 Amps @ 5 Volts • Standard USB Type-A Ports provide 900mA @ 5 Volts
	Rear	6x USB 3.1 Gen1 Type-A via USB hub.
	Internal	1 USB 3.1 Gen1 (via USB hub) header, with a single 12-pin shrouded connector. This header supports a USB Media Card reader. 1 USB 2.0 single port header 1 USB 2.0 dual port header
Flash ROM	Yes	
CPU Fan Header	Yes (CPU0 and CPU1)	
Memory Fan Header	No	
Chassis Fan Header	Yes (2)	
Front PCI Fan Header	Via Aux fan header if needed.	
Front Control Panel/Speaker Header	Yes	
CMOS Battery Holder - Lithium	Yes	
Integrated Trusted Platform Module	Integrated TPM 2.0. Convertible to FIPS 140-2 Certified Mode through firmware v15.21. The TPM module is disabled where restricted by law.	
Power Supply Headers	Yes	

System Technical Specifications

Power Switch, Power LED & Hard Drive LED Header	Yes
Clear Password Jumper	Yes
Keyboard/Mouse	USB and PS/2 (option)

[1]Maximum memory capacities assume 64-bit operating systems, such as Genuine Windows® 11 Professional 64 bit, Red Hat Linux 64-bit.
[2]M.2 storage supports compatible devices up to 80mm

System Technical Specifications

System Configurations								
Example Configuration #1	**Processor Info**	1x Intel® Xeon® 5415+ 8C 2.9GHz 150W						
	Memory Info	32GB DDR5 (2x16GB) RegRAM						
	Graphics Info	1x NVIDIA® A2000						
	Disks/Optical/Floppy	1x 1TB Internal SATA HDD + 1x DVDRW SATA						
	PSU	1125W						
	Other	N/A						
Energy Consumption (Watts)		115 VAC		230 VAC		100 VAC		
		LAN Enabled	LAN Disabled	LAN Enabled	LAN Disabled	LAN Enabled	LAN Disabled	
	Windows Idle (S0)	97.783		93.632		96.522		
	Windows Busy Typ (S0)	255.653		253.33		252.18		
	Windows Busy Max (S0)	258.699		253.884		253.224		
	Sleep (S3)	4.266	4.178	4.246	4.189	4.218	4.176	
	Off (S5)	1.689	1.681	1.699	1.697	1.654	1.631	
	Zero Power Mode (EuP)	0.221		0.323		0.219		

Heat Dissipation (Btu/hr)		115 VAC		230 VAC		100 VAC		
		LAN Enabled	LAN Disabled	LAN Enabled	LAN Disabled	LAN Enabled	LAN Disabled	
	Windows Idle (S0)	333.635		319.472		329.333		
	Windows Busy Typ (S0)	872.288		864.362		860.438		
	Windows Busy Max (S0)	882.681		866.252		864.000		
	Sleep (S3)	14.556	14.255	14.487	14.293	14.392	14.249	
	Off (S5)	5.763	5.736	5.797	5.790	5.643	5.565	
	Zero Power Mode (EuP)	0.754		1.102		0.747		
Example Configuration #2	**Processor Info**	2x Intel® Xeon® 5415+ 8C 2.9GHz 150W						
	Memory Info	64GB DDR5 (4x16GB) RegRAM						
	Graphics Info	1x NVIDIA® A4000						
	Disks/Optical/Floppy	2x 1TB SATA HDD + 2x 4TB Internal M.2 SSD + 1x DVDRW SATA						
	PSU	1125W						
	Other	N/A						
Energy Consumption (Watts)		115 VAC		230 VAC		100 VAC		
		LAN Enabled	LAN Disabled	LAN Enabled	LAN Disabled	LAN Enabled	LAN Disabled	
	Windows Idle (S0)	167.365		158.346		166.35		
	Windows Busy Typ (S0)	474.655		472.688		471.555		
	Windows Busy Max (S0)	508.788		506.355		506.141		
	Sleep (S3)	5.785	5.682	5.564	5.488	5.543	5.418	
	Off (S5)	2.217	2.117	2.237	2.268	2.208	2.104	
	Zero Power Mode (EuP)	0.246		0.351		0.238		

		115 VAC		230 VAC		100 VAC		

System Technical Specifications

Heat Dissipation (Btu/hr)		LAN Enabled	LAN Disabled	LAN Enabled	LAN Disabled	LAN Enabled	LAN Disabled
	Windows Idle (S0)	571.049		540.277		567.586	
	Windows Busy Typ (S0)	1619.523		1612.811		1608.946	
	Windows Busy Max (S0)	1735.985		1727.683		1726.953	
	Sleep (S3)	19.738	19.387	18.984	18.725	18.913	18.486
	Off (S5)	7.564	7.223	7.633	7.738	7.534	7.179
	Zero Power Mode (EuP)	0.839		1.197		0.812	

Example Configuration #3	**Processor Info**	2x Intel® Xeon® 6426Y 2.6GHz 16C 185W
	Memory Info	256GB DDR5 (16x16GB) RegRAM
	Graphics Info	1x NVIDIA® A6000
	Disks/Optical/Floppy	4x 4TB Internal M.2 SSD + 1x DVDRW SATA
	PSU	1450W
	Other	N/A

Energy Consumption (Watts)		115 VAC		230 VAC		100 VAC	
		LAN Enabled	LAN Disabled	LAN Enabled	LAN Disabled	LAN Enabled	LAN Disabled
	Windows Idle (S0)	200.685		196.652		198.568	
	Windows Busy Typ (S0)	627.685		625.992		625.147	
	Windows Busy Max (S0)	658.742		654.668		653.472	
	Sleep (S3)	7.689	7.599	7.674	7.569	7.673	7.558
	Off (S5)	2.425	2.418	2.498	2.459	2.368	2.407
	Zero Power Mode (EuP)	0.278		0.469		0.269	

Heat Dissipation (Btu/hr)		115 VAC		230 VAC		100 VAC	
		LAN Enabled	LAN Disabled	LAN Enabled	LAN Disabled	LAN Enabled	LAN Disabled
	Windows Idle (S0)	684.737		670.977		677.514	
	Windows Busy Typ (S0)	2141.661		2135.885		2133.002	
	Windows Busy Max (S0)	2247.628		2233.727		2229.646	
	Sleep (S3)	26.235	25.928	26.184	25.825	26.180	25.788
	Off (S5)	8.274	8.250	8.523	8.390	8.080	8.213
	Zero Power Mode (EuP)	0.949		1.682		0.918	

Example Configuration #4	**Processor Info**	2x Intel® Xeon® 6430 32C 1.9GHz 270W
	Memory Info	1024GB DDR5 (16x64GB) RegRAM
	Graphics Info	2x NVIDIA® A6000
	Disks/Optical/Floppy	4x 4TB Internal M.2 SSD + 1x DVDRW SATA
	PSU	1450W
	Other	N/A

Energy Consumption (Watts)		115 VAC		230 VAC		100 VAC	
		LAN Enabled	LAN Disabled	LAN Enabled	LAN Disabled	LAN Enabled	LAN Disabled
	Windows Idle (S0)	238.334		216.387		236.884	

System Technical Specifications

	Windows Busy Typ (S0)	830.883		827.664		826.456	
	Windows Busy Max (S0)	977.655		974.662		973.481	
	Sleep (S3)	18.864	18.175	18.688	18.162	18.674	18.115
	Off (S5)	2.738	2.718	2.748	2.729	2.721	2.705
	Zero Power Mode (EuP)	0.297		0.438		0.296	

Heat Dissipation (Btu/hr)		115 VAC		230 VAC		100 VAC	
		LAN Enabled	LAN Disabled	LAN Enabled	LAN Disabled	LAN Enabled	LAN Disabled
	Windows Idle (S0)	813.196		738.312		808.248	
	Windows Busy Typ (S0)	2834.973		2823.990		2819.868	
	Windows Busy Max (S0)	3335.759		3325.547		3321.517	
	Sleep (S3)	64.357	62.013	63.763	61.969	63.716	61.808
	Off (S5)	9.342	9.274	9.376	9.311	9.284	9.229
	Zero Power Mode (EuP)	1.013		1.734		1.010	

NOTE: The numbers in this table are from actual measurements on a single system. There will be some variation from unit to unit.

NOTE: The busy power number and associated BTU/hr number for each configuration will be a strong function of the actual application software run on the system. There can be a great deal of variation in this number.

NOTE: The Power Supply Efficiency report may be found at the following links:
https://www.plugloadsolutions.com/80PlusPowerSuppliesDetail.aspx?id=0&type=2

System Technical Specifications

Operating Voltage Range	90-269 VAC
Rated Voltage Range	100-240 VAC
Rated Line Frequency	50-60 Hz
Operating Line Frequency Range	47-66 Hz
ENERGY STAR® certified (Config Dependent)	Yes
CECP Compliant @ 220V	Yes
FEMP Standby Power Compliant	Yes, with Wake-on-LAN disabled: <1W in S5 - Power Off
Built-in Self Test (BIST) **LED**	Yes
Surge Tolerant Full Ranging Power Supply (withstands power surges up to 2000V)	Yes
Hood Lock Header	Yes
ErP Lot 6- Tier 1 Compliance @ 230V (<1W in S5 - Power Off)	Yes
ErP Lot 6- Tier 2 Compliance @ 230V (<0.5W in S5 - Power Off)	Yes

Declared Noise Emissions (Entry-level, Mid-level, and High-end configurations; tested on floor)			
System Configuration (Entry level)	**Processor Info**	1 x Intel Sapphire Rapids 16C 150W	
	Memory Info	2 x 16GB DDR5-4800 RDIMM	
	Graphics Info	1 x NVIDIA RTX A2000	
	Disks/Optical	1 x 1TB HDD / Blu-Ray R/RE DVD+/-RW	
	Power Supply	1125W	
Declared Noise Emissions		**Sound Power** (LWAd, bels)	**Deskside Sound Pressure** (LpAm, decibels)
	Idle	3.8	19
	Hard drive Operating (Drive Random Seek)	3.9	20
	Active Mode	3.8	19
System Configuration (Mid-level)	**Processor Info**	2 x Intel Sapphire Rapids 16C 150W	
	Memory Info	4 x 16GB DDR5-4800 RDIMM	
	Graphics Info	1 x NVIDIA RTX A4000	
	Disks/Optical	2 x 512GB M.2 + 2 x 1TB HDD / Blu-Ray DVD+/-RW	
	Power Supply	1125W	
Declared Noise Emissions		**Sound Power** (LWAd, bels)	**Deskside Sound Pressure** (LpAm, decibels)
	Idle	3.7	19
	Hard drive Operating (Drive Random Seek)	3.8	21

System Technical Specifications

	Active Mode	3.8	20
System Configuration (High-end)	**Processor Info**	2 x Sapphire Rapids 32C 270W	
	Memory Info	16 x 64 GB DDR5-4800 RDIMM	
	Graphics Info	2 x NVIDIA RTX A6000	
	Disks/Optical	4 x 4TB M.2 + 4 x 8TB HDD / Blu-Ray DVD+/-RW	
	Power Supply	1450W	
Declared Noise Emissions		**Sound Power** (LWAd, bels)	**Deskside Sound Pressure** (LpAm, decibels)
	Idle	4.0	24
	Hard drive Operating (Drive Random Seek)	4.2	24
	Active Mode	4.1	24

Environmental Requirements	**Temperature**	Operating: 5° to 40°C (40° to 104°F)[1] Non-operating: -40° to 60°C (-40° to 140°F) [1]40°C has been validated for configs up to 2x 270W CPU (Intel Xeon Gold 6430), 2x NVIDIA® RTX A4000 graphics cards, 8x64GB RAM, 4x 2TB M.2 storage, 2x 2TB HDD storage, and 1125W PSU
	Humidity	Operating: 8% to 85% RH, non-condensing Non-operating: 8% to 90% RH, non-condensing
	Maximum Altitude	Operating (with Rotational Hard Drives): 3,048 m (10,000 feet) Operating (with only Solid-State Drives): 5,000 m (16,404 feet) Non-operating: 12,192 m (40,000ft) Note: Above 1524 m (5,000 feet) altitude, maximum operating temperature is reduced by 1° C (1.8° F) per 305 m (1,000 feet) increase in elevation.
	Dynamic	Shock Operating: ½-sine: 40g, 2-3ms (~62 cm/sec) Non-operating: ½-sine: 160 cm/s, 2-3ms (~105g) square: 422 cm/s, 20g NOTE: Values represent individual shock events and do not indicate repetitive shock events Vibration Operating random: 0.5g (rms), 5-300 Hz, up to 0.0025g²/Hz Non-operating random: 2.0g (rms), 5-500 Hz, up to 0.0150 g²/Hz NOTE: Values do not indicate continuous vibration.
	Cooling	Above 1524 m (5,000 feet) altitude, the maximum operating temperature is reduced by 1° C (1.8° F) for every 305 m (1,000 feet) increase in elevation, up to 3048 m (10,000 feet)

System Technical Specifications

Physical Security and Serviceability

Access Panel	Tool-less Includes system board and memory information
Optical Drive	Tool-less, 2nd Optical Drive requires a 5.25" bay carrier
Hard Drives	Tool-less
Expansion Cards	Tool-less
Processor Socket	Screw-in processor coolers
Blue User Touch Points	Yes, on tool-less internal chassis mechanisms
Color-coordinated Cables and Connectors	Yes
Memory	Tool-less
System Board	Tool-less, retained by Front Card Guide and Top Memory Fan Holder
Power and HD LED on Front of Computer	Yes
Configuration Record SW	Yes
Over-Temp Warning on Screen	Yes
Dual Function Front Power Switch	Yes, causes a fail-safe power off when held for 4 seconds
Padlock Support	No
Cable Lock Support	Yes, Kensington Cable Lock (optional): Prevents entire system theft only. 3mm x 7mm slot at rear of system
Universal Chassis Clamp Lock Support	No
Solenoid Lock and Hood Sensor	No
Rear Port Control Cover	No
Serial, USB, Audio, Network, Enable/Disable Port Control	Yes
Removable Media Write/Boot Control	Yes
Power-On Password	Yes
Setup Password	Yes, prevents an unauthorized person from changing the workstation configuration.
3.3V Aux Power LED on System PCA	None
NIC LEDs (integrated) (Green & Amber)	Yes
CPUs and Heatsinks	A torx driver (T30) is needed to remove the processor heatsink. CPU attached to heatsink via tool-less clip
Power Supply Diagnostic LED	Yes
Front Power Button	Yes
Front Power LED	Yes, white (normal), red (fault)
Front Hard Drive Activity LED	Yes, white
Front ODD Activity LED	Yes
Internal Speaker	Yes

System Technical Specifications

System/Emergency ROM Flash Recovery	Yes
Cooling Solutions	Air cooled forced convection
Power Supply Fans	2x - Dual Side Inlet Blowers
CPU Heatsink Fan	92 mm x 92 mm x 25.4 mm for each CPU
Chassis Fan	Rear: 120 mm x 38 mm Front Lower: 120 mm x 25.4 mm (PCIe zone)
Memory Heatsink Fan	Front Upper: 92mm x 25mm (upper memory bank); Front Middle: 80mm x 25mm (lower memory bank)
HP PC Hardware Diagnostics UEFI	HP PC Hardware Diagnostics (UEFI) enables hardware level testing outside the operating system on many components. The diagnostics can be invoked by pressing F2 at POST, and is available as a download from HP Support.
Access Panel Key Lock	Yes, left access panel
ACPI-Ready Hardware	Advanced Configuration and Power Management Interface (ACPI). • Allows the system to wake from a low power mode. • Controls system power consumption, making it possible to place individual cards and peripherals in a low-power or powered-off state without affecting other elements of the system.
Integrated Chassis Handles	Yes, front and rear
Power Supply	Tool-less, rear access direct-connect (blind-mate)
PCI Card Retention	Yes, rear (all), middle (full-height cards), front (cards with extender)
Flash ROM	Yes
Diagnostic Power Switch LED on board	Yes
Clear Password Jumper	Yes
Clear CMOS Button	Yes
CMOS Battery Holder	Yes
DIMM Connectors	Yes

Service, Support, and Warranty

On-site Warranty and Service[1]: One-year, limited warranty and service offering delivers on-site, next business-day[2] service for parts and labor and includes free telephone support[3] 8am - 5pm. Global coverage[2] ensures that any product purchased in one country and transferred to another, non-restricted country will remain fully covered under the original warranty and service offering. 24/7 operation will not void the HP warranty. Storage devices are not covered under warranty for 24/7 operation except for Enterprise class HDDs.

NOTE 1: Terms and conditions may vary by country. Certain restrictions and exclusions apply.
NOTE 2: On-site service may be provided pursuant to a service contract between HP and an authorized HP third-party provider, and is not available in certain countries. Global service response times are based on commercially reasonable best effort and may vary by country.
NOTE 3: Technical telephone support applies only to HP-configured, HP and HP-qualified, third-party hardware and software. Toll-free calling and 24x7 support service may not be available in some countries.
HP Care Pack Services extend service contracts beyond the standard warranties. Service starts from date of hardware purchase. To choose the right level of service for your HP product, use the HP Care Pack Services Lookup Tool at: http://www.hp.com/go/lookuptool. Service levels and response times for HP Care Packs may vary depending on your geographic location.

Certification and Compliance

- USGv6 compliant for Windows OS (USGv6 Compliance Report)

System Technical Specifications

- Completed ISO/IEC 17025 accredited testing designed specifically for the USGv6 Test Program. USGv6 is a test program designated by NIST that provides a proof of compliance to IPv6 (Internet Protocol version 6) specifications outlined in current industry standards for common network products. It is meant as a strategic planning guide for USG (United States Government) IT acquisitions to help ensure the completeness, correctness, interoperability and security of early IPv6 product offerings so as to protect early USG investments in the technology. (source: UNH)

Environmental Sustainability questions concerning:

- Ecolabels (EPEAT, TCO, etc.)
- ENERGY STAR, California Energy Commission (CEC)
- Compliance with Environmental legislation (EU ErP, China CECP, EU RoHS and other countries)
- Supply Chain Social Environmental Responsibility (SER) (conflict minerals; human rights, etc.)
- Product specific environmental features (material content, packaging content, recycled content, etc.)
- China Energy Label (CEL)
-

Please contact sustainability@hp.com

For country specific Regulatory Compliance approval documents or Regulatory and Safety questions concerning:

- Declarations of Conformity (for self-service, go to https://www.hp.com/uk-en/certifications/technical/regulations-certificates.html?jumpid=ex_r135_uk/en/any/corp/hpuk-mu_chev/certificates)
- GS Certificates
- Product Safety Certificates (UL, CB, BIS, etc.)
- EMC Certificates, Declarations of Conformity, or Certificates of Conformity (CE, FCC, ICES, etc.)
- CCC Certificates
- Ergonomics
-

Please contact techregshelp@hp.com

BIOS

PCIe 5.0 Support	Full BIOS support for PCI Express through industry standard interfaces. Supported speeds and slot information vary.
ATA/ATAPI	AT Attachment 6 with Packet Interface (ATA/ATAPI-6), Revision 3b
WMI Support	WMI is Microsoft's implementation of Web-Based Enterprise Management (WBEM) for Windows. WMI is fully compliant with the Distributed Management Task Force (DMTF) Common Information Model (CIM) and WBEM specifications.
BIOS Power On	Users can define a specific date and time for the system to power on.
ROM Based Computer Setup Utility (F10)	Review and customize system configuration settings controlled by the BIOS.
System/Emergency ROM Flash Recovery with Video	Recovers system BIOS in corrupted Flash ROM.
Replicated Setup	Saves BIOS settings to USB flash device in human readable file (HpSetup.txt). BiosConfigurationUtility.exe utility can then replicate these settings on machines being deployed without entering Computer Configuration Utility (F10 Setup).
SMBIOS	System Management BIOS Reference Specification, Version 3.2
Boot Control	Disables the ability to boot from removable media on supported devices.
Memory Change Alert	Alerts management console if memory is removed or changed.
Thermal Alert	Monitors the temperature state within the chassis. Three modes: • NORMAL - normal temperature ranges. • ALERTED - excessive temperatures are detected. Raises a flag so action can be taken to avoid shutdown or provide for a smoother system shutdown. • SHUTDOWN - excessive temperatures are encountered. Automatically shuts down the computer without warning before hardware component damage occurs.

System Technical Specifications

Remote ROM Flash	Provides secure, fail-safe ROM image management from a central network console.
ACPI (Advanced Configuration and Power Management Interface)	Allows the system to enter and resume from low power modes (sleep states). Enables an operating system to control system power consumption based on the dynamic workload. Makes it possible to place individual cards and peripherals in a low-power or powered-off state without affecting other elements of the system. Supports ACPI 6.0 for full compatibility with 64-bit operating systems.
Ownership Tag	A user-defined string stored in non-volatile memory that is displayed in the BIOS splash screen.
Remote Wakeup/Remote Shutdown	System administrators can power on, restart, and power off a client computer from a remote location.
Instantly Available PC (Suspend to RAM - ACPI sleep state S3)	Allows for very low power consumption with quick resume time.
Remote System Installation via F12 (PXE 2.1) (Remote Boot from Server)	Allows a new or existing system to boot over the network and download software, including the operating system.
ROM revision levels	Reports the system BIOS revision level in Computer Configuration Utility (F10 Setup). Version is available through an industry standard interface (SMBIOS and WMI) so that management SW applications can use and report this information.
System board revision level	Allows management SW to read revision level of the system board. Revision level is digitally encoded into the HW and cannot be modified.
Start-up Diagnostics (Power-on Self-Test)	Assesses system health at boot time with selectable levels of testing.
Auto Setup when new hardware installed	System automatically detects addition of new hardware.
Keyboard-less Operation	The system can be booted without a keyboard.
Localized ROM Setup	Common BIOS image supports System Configuration Utility (F10 Setup) menus in 15 languages with local keyboard mappings.
Asset Tag	The user or MIS to set a unique tag string in non-volatile memory.
Per-slot Control	Allows I/O slot parameters (option ROM enable/disable, bifurcation, speed) to be configured individually.
Adaptive Cooling	Control parameters are set according to detected hardware configuration for optimal acoustics.
Pre-boot Diagnostics	(Pre-video) critical errors are reported via beeps and blinks on the power LED.
UEFI Specification Revision	2.7B
ACPI	Advanced Configuration and Power Management Interface, Version 6.0
CD Boot	"El Torito" Bootable CD-ROM Format Specification Version 1.0
EHCI	Enhanced Host Controller Interface for Universal Serial Bus, Revision 1.0
PCI Express	PCI Express Base Specification, Revision 2.0 PCI Express Base Specification, Revision 3.0 PCI Express Base Specification, Revision 4.0 PCI Express Base Specification, Revision 5.0
SATA	Serial ATA Specification, Revision 1.0a Serial ATA 3 Gb/s: Serial ATA Specification, Revision 2.5 Serial ATA 6 Gb/s: Serial ATA Specification, Revision 3.0
SPD	JEDEC JESD300-5
TPM	Trusted Computing Group TPM Specification Version 2.0 (Infineon SLB 9672). Common Criteria EAL4+ certified. FIPS 140-2 Certification TCG TPM Certified products list: http://www.trustedcomputinggroup.org/certification/tpm-certified-products/
UHCI	Universal Host Controller Interface Design Guide, Revision 1.1

System Technical Specifications

USB	Universal Serial Bus Revision 1.1 Specification Universal Serial Bus Revision 2.0 Specification Universal Serial Bus Revision 3.1 Specification Universal Serial Bus Revision 3.2 Specification USB Battery Charging specification, Revision 1.2 USB Power Delivery specification Revision 3.0
SMBIOS	System Management BIOS Reference Specification, Version 3.2

Social and Environmental Responsibility

Eco-Label Certifications & Declarations

This product is low halogen except for configurations that include HP Z Turbo Quad Pro PCIe TLC SSD, CRU QX428 removable storage frames, ConnectX-6 DX Amphenol 10 & 25 Gb Transceivers, Intel VROC M.2 RAID module, Broadcom 5720-2P NIC Card, power cords, cables, and peripherals. Service parts obtained after purchase may not be Low Halogen.

This product has received or is in the process of being certified to the following approvals and may be labeled with one or more of these marks:

- IT ECO declaration
- ENERGY STAR® (energy-saving features available on selected configurations-Windows only)
- US Federal Energy Management Program (FEMP)
- EPEAT® Gold with Climate+ registered. See www.epeat.net for registration status and tier levels by country
- TCO Certified
- China Energy Conservation Program (CECP)
- China State Environmental Protection Administration (SEPA)
- Taiwan Green Mark
- Korea Eco-label
- Japan PC Green label*

Sustainable Impact Specifications

- Product Carbon Footprint (hp.com)
- Ocean-bound plastic in System fan, CPU fan
- 40% post-consumer recycled plastic
- 10% recycled metal
- Low halogen
- Outside Box and corrugated cushions are 100% sustainably sourced and recyclable
- Recycled Plastic cushions

System Configuration

The configuration used for the Energy Consumption and Declared Noise Emissions data is based on a “Typically Configured Desktop Workstation”.

Energy Consumption (in accordance with US ENERGY STAR® test method)	**115VAC, 60Hz**	**230VAC, 50Hz**	**100VAC, 50Hz**
Normal Operation (Sort idle)	187.49 W	191.59 W	197.06 W
Normal Operation (Long idle)	184.27 W	187.92 W	184.67 W
Sleep	14.66 W	13.58 W	14.57 W
Off	2.49 W	2.63 W	2.49 W

Note:
Energy efficiency data listed is for an ENERGY STAR® compliant product if offered within the model family . HP computers marked with the ENERGY STAR® Logo are compliant with the applicable U.S. Environmental Protection Agency (EPA) ENERGY STAR® specifications for computers. If a model family does not offer ENERGY STAR® compliant configurations, then energy efficiency data listed is

for a typically configured PC featuring a hard disk drive, a high efficiency power supply, and a Microsoft Windows® operating system.

Heat Dissipation*	115VAC, 60Hz	230VAC, 50Hz	100VAC, 50Hz
Normal Operation (Short idle)	641.2 BTU/hr	655.2 BTU/hr	673.9 BTU/hr
Normal Operation (Long idle)	630.2 BTU/hr	642.7 BTU/hr	631.6 BTU/hr
Sleep	50.1 BTU/hr	46.4 BTU/hr	49.8 BTU/hr
Off	8.5 BTU/hr	9.0 BTU/hr	8.5 BTU/hr

*NOTE: Heat dissipation is calculated based on the measured watts, assuming the service level is attained for one hour.

Longevity and Upgrading

This product can be upgraded, possibly extending its useful life by several years. Upgradeable features and/or components contained in the

Spare parts are available throughout the warranty period and or for up to “5” years after the end of production.

Additional Information

- This product is in compliance with the Restrictions of Hazardous Substances (RoHS) directive - 2011/65/EC.
- This HP product is designed to comply with the Waste Electrical and Electronic Equipment (WEEE) Directive – 2002/96/EC.
- This product is in compliance with California Proposition 65 (State of California; Safe Drinking Water and Toxic Enforcement Act of 1986).
- This product is in compliance with the IEEE 1680 (EPEAT) standard at the Gold level, see www.epeat.net
- Plastics parts weighing over 25 grams used in the product are marked per ISO11469 and ISO1043.
- This product is 95.1% recycle-able when properly disposed of at end of life.

Packaging Materials

External:	PAPER/Corrugated	2000 g
	PAPER/Corrugated	70 g
Internal:	PLASTIC/Polyethylene low density - LDPE	46 g
	PLASTIC/Polyethylene Expanded - EPE	450 g

The plastic packaging material contains at least 95.1% recycled content.

The corrugated paper packaging materials contains at least 35.0% recycled content.

RoHS Compliance

HP Inc. complies fully with materials regulations. We were among the first companies to extend the restrictions in the European Union (EU) Restriction of Hazardous Substances (RoHS) Directive to our products worldwide through the HP GSE. HP has contributed to the development of related legislation in Europe, as well as China, India, and Vietnam.

We believe the RoHS directive and similar laws play an important role in promoting industry-wide elimination of substances of concern. We have supported the inclusion of additional substances—including PVC, BFRs, and certain phthalates—in future RoHS legislation that pertains to electrical and electronics products.

We met our voluntary objective to achieve worldwide compliance with the new EU RoHS requirements for virtually all relevant products by July 2013, and we will continue to extend the scope of the commitment to include further restricted substances as regulations continue to evolve.

To obtain a copy of the HP RoHS Compliance Statement, see HP RoHS position statement.

System Technical Specifications

Material Usage

This product does not contain any of the following substances in excess of regulatory limits (refer to the HP General Specification for the Environment at http://www.hp.com/hpinfo/globalcitizenship/environment/supplychain/gen_specifications.html):

- Asbestos
- Certain Azo Colorants
- Certain Brominated Flame Retardants – may not be used as flame retardants in plastics
- Cadmium
- Chlorinated Hydrocarbons
- Chlorinated Paraffins
- Bis(2-Ethylhexyl) phthalate (DEHP)
- Benzyl butyl phthalate (BBP)
- Dibutyl phthalate (DBP)
- Diisobutyl phthalate (DIBP)
- Formaldehyde
- Halogenated Diphenyl Methanes
- Lead carbonates and sulfates
- Lead and Lead compounds
- Mercuric Oxide Batteries
- Nickel – finishes must not be used on the external surface designed to be frequently handled or carried by the user.
- Ozone Depleting Substances
- Polybrominated Biphenyls (PBBs)
- Polybrominated Biphenyl Ethers (PBBEs)
- Polybrominated Biphenyl Oxides (PBBOs)
- Polychlorinated Biphenyl (PCB)
- Polychlorinated Terphenyls (PCT)
- Polyvinyl Chloride (PVC) – except for wires and cables, and certain retail packaging has been voluntarily removed from most applications.
- Radioactive Substances
- Tributyl Tin (TBT), Triphenyl Tin (TPT), Tributyl Tin Oxide (TBTO)

Packaging Usage

HP follows these guidelines to decrease the environmental impact of product packaging:

- Eliminate the use of heavy metals such as lead, chromium, mercury and cadmium in packaging materials.
- Eliminate the use of ozone-depleting substances (ODS) in packaging materials.
- Design packaging materials for ease of disassembly.
- Maximize the use of post-consumer recycled content materials in packaging materials.
- Use readily recyclable packaging materials such as paper and corrugated materials.
- Reduce size and weight of packages to improve transportation fuel efficiency.
- Plastic packaging materials are marked according to ISO 11469 and DIN 6120 standards.

End-of-life Management and Recycling

HP offers end-of-life HP product return and recycling programs in many geographic areas. To recycle your product, please go to: http://www.hp.com/go/reuse-recycle or contact your nearest HP sales office. Products returned to HP will be recycled, recovered or disposed of in a responsible manner.

The EU WEEE directive (2002/95/EC) requires manufacturers to provide treatment information for each product type for use by treatment facilities. This information (product disassembly instructions) is posted on the Hewlett Packard web site at: http://www.hp.com/go/recyclers.

These instructions may be used by recyclers and other WEEE treatment facilities as well as HP OEM customers who integrate and re-sell HP equipment.

HP, Inc. Corporate Environmental Information

For more information about HP's commitment to the environment:

Global Citizenship Report
http://www.hp.com/hpinfo/globalcitizenship/gcreport/index.html
Eco-label certifications
http://www8.hp.com/us/en/hp-information/environment/ecolabels.html
ISO 14001 certificates:
http://h20195.www2.hp.com/V2/GetDocument.aspx?docname=c04755842
and
http://www.hp.com/hpinfo/globalcitizenship/environment/pdf/cert.pdf

footnotes

- Percentage of ocean-bound plastic contained in each component varies by product
- Recycled plastic content percentage is based on the definition set in the IEEE 1680.1-2018 standard.
- External power supplies, WWAN modules, power cords, cables and peripherals excluded.
- 100% outer box packaging and corrugated cushions made from sustainably sourced certified and recycled fibers.
- Fiber cushions made from 100% recycled wood fiber and organic materials.
- Plastic cushions are made from >90% recycled plastic.
- Recycled metal is expressed as a percentage of the total weight of the metal according to ISO 14021 definitions for metal parts over 25 grams.

Manageability

Industry Standard Specifications

This product meets the following industry standard specifications for manageability functionality:

- DASH 1.1 (via Intel® LAN on motherboard)

Intel® Active Management Technology (AMT)

Intel® Active Management Technology (AMT) 15.20

An advanced set of remote management features and functionality providing IT administrators the latest and most effective tools to remotely discover, heal, and protect networked client systems regardless of the system's health or power state. AMT 15.20 includes the following advanced management functions:

- Power Management (on, off, reset, graceful shutdown, sleep and hibernate)
  - Support in Max Power Savings (Shutdown and Hibernate Modes)
- Hardware Inventory (includes BIOS and firmware revisions)
- Hardware Alerting
- Agent Presence
- System Defense Filters
- Serial Over LAN (SOL)
- USB Redirect (Media Redirection)
- ME Wake-on-LAN (WOL), even with Maximum Power Savings Enabled
- DASH 1.2 compliance
- IPv6 Support
- Fast Call for Help - a client inside or outside the firewall may initiate a call for help via BIOS screen, periodic connections, or alert triggered connection
- Remote Scheduled Maintenance - pre-schedule when the system connects to the IT or service provider console for maintenance.
- Remote Alerts - automatically alert IT or service provider if issues arise
- Access Monitor - Provides oversight into Intel® AMT actions to support security requirements

	• PC Alarm Clock • Microsoft NAP Support • Host Base set-up and configuration • Management Engine (ME) firmware roll back • Local Time Sync to UTC • Remote Memory Dump Command – Creates memory dump for debug
Intel® vPro™ Technology	Yes, when configured with an Intel® vPro™ supporting processor.

Stable & Consistent Offerings

Global Series SKUs

As part of its commitment to hardware, software, and solution innovation, HP is proud to introduce this breakthrough platform configuration stability to HP Workstation customers. HP Stable & Consistent Offerings are built on the foundation of a carefully chosen set of hardware and software designed and tested to work with all HP Z Workstation platforms through their end of life. These components and their corresponding HP Workstation platform compatibility are outlined in this section.

Stable & Consistent Offerings

HP Stable & Consistent Offerings are available worldwide to all HP Workstation customers-no special programs, no additional cost-no kidding. Simply select your hardware and software components when you customize your HP Workstation and be assured that you'll be able to buy that same configuration throughout the lifecycle of the product.

Processors	Product #	Offering
	3F4D7AV	Intel Xeon 5415+
	3F4D3AV	Intel Xeon 4410Y

Graphics	Product #	Offering
	6Z325AV	NVIDIA Long-Life T1000E
	6Z319AV	NVIDIA Long-Life RTX A2000E
	6Z321AV	NVIDIA Long-Life RTX A4000E
	6B4J4AV	AMD Radeon RX 6400
	3F2W5AV	AMD Radeon Pro 6600

Storage	Product #	Offering
	3F3A6AV	Z Turbo 1TB PCIe-4x4 2280 TLC M.2 Solid State Drive
	3F4E6AV	1TB 7200RPM SATA 3.5in Enterprise

Technical Specifications - Storage Drives

STORAGE/HARD DRIVES

Performance PCIe SSDs for HP Workstations	**Z Turbo 512GB 2280 PCIe-4x4 TLC SSD**	**Capacity**	512GB	
		Protocol	PCIe	
		Form Factor	M.2	
		Controller	NVMe	
		NAND Type	3D TLC	
		Endurance	300TBW (TB Written)	
		Reliability	1.5M hours	
		Rated for 24/7/365 operation	No	
		Interface	PCI Express 4.0 x4 electrical	
		Operating Temperature	32° to 158° F (0° to 70° C)	
		Performance	**Sequential Read**	up to 6400MB/s*
			Sequential Write	up to 3400MB/s*
			Random Read	up to 600K IOPS*
			Random Write	up to 600K IOPS*

*Actual performance may vary.
NOTE: For storage drives, GB = 1 billion bytes. TB = 1 trillion bytes. Actual formatted capacity is less. Up to 36GB of system disk (for Windows) is reserved for system recovery software.

Z Turbo 512GB 2280 PCIe-4x4 SED OPAL2 TLC M.2 SSD	**Capacity**	512GB	
	Protocol	PCIe	
	Form Factor	M.2	
	Controller	NVMe	
	NAND Type	3D TLC	
	Endurance	300TBW (TB Written)	
	Reliability	1.5M hours	
	Rated for 24/7/365 operation	No	
	Interface	PCI Express 4.0 x4 electrical	
	Operating Temperature	32° to 158° F (0° to 70° C)	
	Performance	**Sequential Read**	up to 6400MB/s*
		Sequential Write	up to 3400MB/s*
		Random Read	up to 600K IOPS*
		Random Write	up to 600K IOPS*
	Self-Encrypting Drive Support	OPAL 2	

*Actual performance may vary.
NOTE: For storage drives, GB = 1 billion bytes. TB = 1 trillion bytes. Actual formatted capacity is less. Up to 36GB of system disk (for Windows) is reserved for system recovery software.

Z Turbo 1TB 2280 PCIe-4x4 SED OPAL2 TLC M.2 SSD	**Capacity**	1TB
	Protocol	PCIe
	Form Factor	M.2
	Controller	NVMe
	NAND Type	3D TLC
	Endurance	400TBW (TB Written)
	Reliability	1.5M hours

	Rated for 24/7/365 operation	No
	Interface	PCI Express 4.0 x4 electrical
	Operating Temperature	32° to 158° F (0° to 70° C)
	Performance	**Sequential Read** up to 6500MB/s*
		Sequential Write up to 5000MB/s*
		Random Read up to 800K IOPS*
		Random Write up to 800K IOPS*
	Self-Encrypting Drive Support	OPAL 2

*Actual performance may vary.

NOTE: For storage drives, GB = 1 billion bytes. TB = 1 trillion bytes. Actual formatted capacity is less. Up to 36GB of system disk (for Windows) is reserved for system recovery software.

Z Turbo 1TB 2280 PCIe-4x4 TLC SSD	**Capacity**	1TB
	Protocol	PCIe
	Form Factor	M.2
	Controller	NVMe
	NAND Type	3D TLC
	Endurance	400TBW (TB Written)
	Reliability	1.5M hours
	Rated for 24/7/365 operation	No
	Interface	PCI Express 4.0 x4 electrical
	Operating Temperature	32° to 158° F (0° to 70° C)
	Performance	**Sequential Read** up to 6500MB/s*
		Sequential Write up to 5000MB/s*
		Random Read up to 800K IOPS*
		Random Write up to 800K IOPS*

*Actual performance may vary.

NOTE: For storage drives, GB = 1 billion bytes. TB = 1 trillion bytes. Actual formatted capacity is less. Up to 36GB of system disk (for Windows) is reserved for system recovery software.

Z Turbo 1TB 2280 PCIe-4x4 TLC SSD	**Capacity**	1TB
	Protocol	PCIe
	Form Factor	M.2
	Controller	NVMe
	NAND Type	3D TLC
	Endurance	400TBW (TB Written)
	Reliability	1.5M hours
	Rated for 24/7/365 operation	No
	Interface	PCI Express 4.0 x4 electrical
	Operating Temperature	32° to 158° F (0° to 70° C)
	Performance	**Sequential Read** up to 6500MB/s*
		Sequential Write up to 5000MB/s*
		Random Read up to 800K IOPS*
		Random Write up to 800K IOPS*

Technical Specifications - Storage Drives

*Actual performance may vary.

NOTE: For storage drives, GB = 1 billion bytes. TB = 1 trillion bytes. Actual formatted capacity is less. Up to 36GB of system disk (for Windows) is reserved for system recovery software.

Z Turbo 2TB 2280 PCIe-4x4 SED OPAL2 TLC M.2 SSD	**Capacity**	2TB	
	Protocol	PCIe	
	Form Factor	M.2	
	Controller	NVMe	
	NAND Type	3D TLC	
	Endurance	500TBW (TB Written)	
	Reliability	1.5M hours	
	Rated for 24/7/365 operation	No	
	Interface	PCI Express 4.0 x4 electrical	
	Operating Temperature	32° to 158° F (0° to 70° C)	
	Performance	**Sequential Read**	up to 6500MB/s*
		Sequential Write	up to 5000MB/s*
		Random Read	up to 800K IOPS*
		Random Write	up to 800K IOPS*
	Self-Encrypting Drive Support	OPAL 2	

*Actual performance may vary.

NOTE: For storage drives, GB = 1 billion bytes. TB = 1 trillion bytes. Actual formatted capacity is less. Up to 36GB of system disk (for Windows) is reserved for system recovery software.

Z Turbo 2TB 2280 PCIe-4x4 TLC SSD	**Capacity**	2TB	
	Protocol	PCIe	
	Form Factor	M.2	
	Controller	NVMe	
	NAND Type	3D TLC	
	Endurance	500TBW (TB Written)	
	Reliability	1.5M hours	
	Rated for 24/7/365 operation	No	
	Interface	PCI Express 4.0 x4 electrical	
	Operating Temperature	32° to 158° F (0° to 70° C)	
	Performance	**Sequential Read**	up to 6500MB/s*
		Sequential Write	up to 5000MB/s*
		Random Read	up to 800K IOPS*
		Random Write	up to 800K IOPS*

*Actual performance may vary.

NOTE: For storage drives, GB = 1 billion bytes. TB = 1 trillion bytes. Actual formatted capacity is less. Up to 36GB of system disk (for Windows) is reserved for system recovery software.

Z Turbo 4TB 2280 PCIe-4x4 TLC M.2 SSD	**Capacity**	4TB
	Protocol	PCIe
	Form Factor	M.2
	Controller	NVMe
	NAND Type	3D TLC

		Endurance	600TBW (TB Written)
		Reliability	1.5M hours
		Rated for 24/7/365 operation	No
		Interface	PCI Express 4.0 x4 electrical
		Operating Temperature	32° to 158° F (0° to 70° C)
		Performance	**Sequential Read** up to 6500MB/s*
			Sequential Write up to 5000MB/s*
			Random Read up to 700K IOPS*
			Random Write up to 700K IOPS*

*Actual performance may vary.

NOTE: For storage drives, GB = 1 billion bytes. TB = 1 trillion bytes. Actual formatted capacity is less. Up to 36GB of system disk (for Windows) is reserved for system recovery software.

	Z Turbo 4TB 2280 PCIe-4x4 SED OPAL2 TLC M.2 SSD	**Capacity**	4TB
		Protocol	PCIe
		Form Factor	M.2
		Controller	NVMe
		NAND Type	3D TLC
		Endurance	600TBW (TB Written)
		Reliability	1.5M hours
		Rated for 24/7/365 operation	No
		Interface	PCI Express 4.0 x4 electrical
		Operating Temperature	32° to 158° F (0° to 70° C)
		Performance	**Sequential Read** up to 6500MB/s*
			Sequential Write up to 5000MB/s*
			Random Read up to 700K IOPS*
			Random Write up to 700K IOPS*
		Self-Encrypting Drive Support	OPAL 2

*Actual performance may vary.

NOTE: For storage drives, GB = 1 billion bytes. TB = 1 trillion bytes. Actual formatted capacity is less. Up to 36GB of system disk (for Windows) is reserved for system recovery software.

Performance PCIe SSDs for HP Dual Pro Carrier	**HP Z Turbo Drive Dual Pro 512GB SSD**	**Capacity**	512GB
		Protocol	PCIe
		Form Factor	M.2
		Controller	NVMe
		NAND Type	3D TLC
		Endurance	300TBW (TB Written)
		Reliability	1.5M hours
		Rated for 24/7/365 operation	No
		Interface	PCI Express 4.0 x4 electrical
		Operating Temperature	32° to 158° F (0° to 70° C)
		Performance	**Sequential Read** up to 6400MB/s*

		Sequential Write	up to 3400MB/s*
		Random Read	up to 600K IOPS*
		Random Write	up to 600K IOPS*

*Actual performance may vary.

NOTE: For storage drives, GB = 1 billion bytes. TB = 1 trillion bytes. Actual formatted capacity is less. Up to 36GB of system disk (for Windows) is reserved for system recovery software.

HP Z Turbo Drive Dual Pro 1TB SSD	**Capacity**	1TB	
	Protocol	PCIe	
	Form Factor	M.2	
	Controller	NVMe	
	NAND Type	3D TLC	
	Endurance	400TBW (TB Written)	
	Reliability	1.5M hours	
	Rated for 24/7/365 operation	No	
	Interface	PCI Express 4.0 x4 electrical	
	Operating Temperature	32° to 158° F (0° to 70° C)	
	Performance	**Sequential Read**	up to 6500MB/s*
		Sequential Write	up to 5000MB/s*
		Random Read	up to 800K IOPS*
		Random Write	up to 800K IOPS*

*Actual performance may vary.

NOTE: For storage drives, GB = 1 billion bytes. TB = 1 trillion bytes. Actual formatted capacity is less. Up to 36GB of system disk (for Windows) is reserved for system recovery software.

HP Z Turbo Drive Dual Pro 2TB SSD	**Capacity**	2TB	
	Protocol	PCIe	
	Form Factor	M.2	
	Controller	NVMe	
	NAND Type	3D TLC	
	Endurance	500TBW (TB Written)	
	Reliability	1.5M hours	
	Rated for 24/7/365 operation	No	
	Interface	PCI Express 4.0 x4 electrical	
	Operating Temperature	32° to 158° F (0° to 70° C)	
	Performance	**Sequential Read**	up to 6500MB/s*
		Sequential Write	up to 5000MB/s*
		Random Read	up to 800K IOPS*
		Random Write	up to 800K IOPS*

*Actual performance may vary.

NOTE: For storage drives, GB = 1 billion bytes. TB = 1 trillion bytes. Actual formatted capacity is less. Up to 36GB of system disk (for Windows) is reserved for system recovery software.

HP Z Turbo Drive Dual Pro 4TB SSD	**Capacity**	4TB
	Protocol	PCIe
	Form Factor	M.2
	Controller	NVMe

Technical Specifications - Storage Drives

		NAND Type	3D TLC
		Endurance	500TBW (TB Written)
		Reliability	1.5M hours
		Rated for 24/7/365 operation	No
		Interface	PCI Express 4.0 x4 electrical
		Operating Temperature	32° to 158° F (0° to 70° C)
		Performance	**Sequential Read** up to 6500MB/s*
			Sequential Write up to 5000MB/s*
			Random Read up to 800K IOPS*
			Random Write up to 800K IOPS*

*Actual performance may vary.

NOTE: For storage drives, GB = 1 billion bytes. TB = 1 trillion bytes. Actual formatted capacity is less. Up to 36GB of system disk (for Windows) is reserved for system recovery software.

Performance PCIe SSDs for HP Quad Pro Carrier	**HP Z Turbo Drive Quad Pro 512GB SSD**	**Capacity**	512GB
		Protocol	PCIe
		Form Factor	M.2
		Controller	NVMe
		NAND Type	3D TLC
		Endurance	300TBW (TB Written)
		Reliability	1.5M hours
		Rated for 24/7/365 operation	No
		Interface	PCI Express 4.0 x4 electrical
		Operating Temperature	32° to 158° F (0° to 70° C)
		Performance	**Sequential Read** up to 6400MB/s*
			Sequential Write up to 3400MB/s*
			Random Read up to 600K IOPS*
			Random Write up to 600K IOPS*

*Actual performance may vary.

NOTE: For storage drives, GB = 1 billion bytes. TB = 1 trillion bytes. Actual formatted capacity is less. Up to 36GB of system disk (for Windows) is reserved for system recovery software.

	HP Z Turbo Drive Quad Pro 1TB SSD	**Capacity**	1TB
		Protocol	PCIe
		Form Factor	M.2
		Controller	NVMe
		NAND Type	3D TLC
		Endurance	400TBW (TB Written)
		Reliability	1.5M hours
		Rated for 24/7/365 operation	No
		Interface	PCI Express 4.0 x4 electrical
		Operating Temperature	32° to 158° F (0° to 70° C)
		Performance	**Sequential Read** up to 6500MB/s*
			Sequential Write up to 5000MB/s*

		Random Read	up to 800K IOPS*
		Random Write	up to 800K IOPS*

*Actual performance may vary.
NOTE: For storage drives, GB = 1 billion bytes. TB = 1 trillion bytes. Actual formatted capacity is less. Up to 36GB of system disk (for Windows) is reserved for system recovery software.

HP Z Turbo Drive Quad Pro 2TB SSD	**Capacity**	2TB	
	Protocol	PCIe	
	Form Factor	M.2	
	Controller	NVMe	
	NAND Type	3D TLC	
	Endurance	500TBW (TB Written)	
	Reliability	1.5M hours	
	Rated for 24/7/365 operation	No	
	Interface	PCI Express 4.0 x4 electrical	
	Operating Temperature	32° to 158° F (0° to 70° C)	
	Performance	**Sequential Read**	up to 6500MB/s*
		Sequential Write	up to 5000MB/s*
		Random Read	up to 800K IOPS*
		Random Write	up to 800K IOPS*

*Actual performance may vary.
NOTE: For storage drives, GB = 1 billion bytes. TB = 1 trillion bytes. Actual formatted capacity is less. Up to 36GB of system disk (for Windows) is reserved for system recovery software.

HP Z Turbo Drive Quad Pro 4TB SSD	**Capacity**	4TB	
	Protocol	PCIe	
	Form Factor	M.2	
	Controller	NVMe	
	NAND Type	3D TLC	
	Endurance	500TBW (TB Written)	
	Reliability	1.5M hours	
	Rated for 24/7/365 operation	No	
	Interface	PCI Express 4.0 x4 electrical	
	Operating Temperature	32° to 158° F (0° to 70° C)	
	Performance	**Sequential Read**	up to 6500MB/s*
		Sequential Write	up to 5000MB/s*
		Random Read	up to 800K IOPS*
		Random Write	up to 800K IOPS*

*Actual performance may vary.
NOTE: For storage drives, GB = 1 billion bytes. TB = 1 trillion bytes. Actual formatted capacity is less. Up to 36GB of system disk (for Windows) is reserved for system recovery software.

SATA Hard Drives for HP Workstations	**1TB 7200RPM SATA 3.5in Enterprise HDD**	**Capacity**	1TB
		Protocol	SATA
		Form Factor	3.5"
		Controller	AHCI

	Reliability	2.0M hours	
	Rated Power On Hours	8760/yr	
	Annualized Failure Rate (based on Rated POH)	<0.62%	
	Rated for 24/7/365 operation	YES	
	Height	1 in; 2.54 cm	
	Width	**Media Diameter**	3.5 in; 8.9 cm
		Physical Size	4 in; 10.17 cm
	Interface	Serial ATA (6.0Gb/s), NCQ enabled	
	Synchronous Transfer Rate (Maximum)	Up to 600MB/s *	
	Buffer	128MB	
	Cache	Adaptive	
	Seek Time (typical reads, includes controller overhead, including settling)	**Single Track**	0.32 ms *
		Average	7.45 ms *
		Full Stroke	14.2 ms *
	Rotational Speed	7,200 rpm	
	Logical Blocks	1,953,525,168	
	Operating Temperature	41° to 131° F (5° to 55° C)	
	Performance	**Sequential Read**	up to 226MB/s*
		Sequential Write	up to 226MB/s*

*Actual performance may vary.

NOTE: For storage drives, GB = 1 billion bytes. TB = 1 trillion bytes. Actual formatted capacity is less. Up to 36GB of system disk (for Windows) is reserved for system recovery software.

2TB 7200RPM SATA 3.5in Enterprise HDD	**Capacity**	2TB	
	Protocol	SATA	
	Form Factor	3.5"	
	Controller	AHCI	
	Reliability	2.0M hours	
	Rated Power On Hours	8760/yr	
	Annualized Failure Rate (based on Rated POH)	<0.62%	
	Rated for 24/7/365 operation	YES	
	Height	1 in; 2.54 cm	
	Width	**Media Diameter**	3.5 in; 8.9 cm
		Physical Size	4 in; 10.17 cm
	Interface	Serial ATA (6.0Gb/s), NCQ enabled	
	Synchronous Transfer Rate (Maximum)	Up to 600MB/s *	
	Buffer	128MB	
	Cache	Adaptive	
	Seek Time (typical reads, includes controller	**Single Track**	0.7 ms *
		Average	8.5 ms *
		Full Stroke	15.7 ms *

	overhead, including settling)		
	Rotational Speed	7,200 rpm	
	Logical Blocks	3,907,029,168	
	Operating Temperature	41° to 131° F (5° to 55° C)	
	Performance	**Sequential Read**	up to 226MB/s*
		Sequential Write	up to 226MB/s*

*Actual performance may vary.

NOTE: For storage drives, GB = 1 billion bytes. TB = 1 trillion bytes. Actual formatted capacity is less. Up to 36GB of system disk (for Windows) is reserved for system recovery software.

4TB 7200 RPM SATA 3.5in Enterprise HDD	**Capacity**	4TB	
	Protocol	SATA	
	Form Factor	3.5"	
	Controller	AHCI	
	Reliability	2.0M hours	
	Rated Power On Hours	8760/yr	
	Annualized Failure Rate (based on Rated POH)	<0.62%	
	Rated for 24/7/365 operation	YES	
	Height	1 in; 2.54 cm	
	Width	**Media Diameter**	3.5 in; 8.9 cm
		Physical Size	4 in; 10.17 cm
	Interface	Serial ATA (6.0Gb/s), NCQ enabled	
	Synchronous Transfer Rate (Maximum)	Up to 600MB/s *	
	Buffer	256MB	
	Cache	Adaptive	
	Seek Time (typical reads, includes controller overhead, including settling)	**Single Track**	0.7 ms *
		Average	8.5 ms *
		Full Stroke	15.7 ms *
	Rotational Speed	7,200 rpm	
	Logical Blocks	7,814,037,168	
	Operating Temperature	41° to 131° F (5° to 55° C)	
	Performance	**Sequential Read**	up to 226MB/s*
		Sequential Write	up to 226MB/s*

*Actual performance may vary.

NOTE: For storage drives, GB = 1 billion bytes. TB = 1 trillion bytes. Actual formatted capacity is less. Up to 36GB of system disk (for Windows) is reserved for system recovery software.

8TB 7200RPM SATA 3.5in Enterprise HDD	**Capacity**	8TB
	Protocol	SATA
	Form Factor	3.5"
	Controller	AHCI
	Reliability	2.0M hours
	Rated Power On Hours	8760/yr

	Annualized Failure Rate (based on Rated POH)	<0.62%	
	Rated for 24/7/365 operation	YES	
	Height	1 in; 2.54 cm	
	Width	**Media Diameter**	3.5 in; 8.9 cm
		Physical Size	4 in; 10.17 cm
	Interface	Serial ATA (6.0Gb/s), NCQ enabled	
	Synchronous Transfer Rate (Maximum)	Up to 600MB/s *	
	Buffer	256MB	
	Cache	Adaptive	
	Seek Time (typical reads, includes controller overhead, including settling)	**Single Track**	0.7 ms *
		Average	8.5 ms *
		Full Stroke	15.7 ms *
	Rotational Speed	7,200 rpm	
	Logical Blocks	15,628,053,168	
	Operating Temperature	41° to 140° F (5° to 60° C)	
	Performance	**Sequential Read**	up to 226MB/s*
		Sequential Write	up to 226MB/s*

*Actual performance may vary.

NOTE: For storage drives, GB = 1 billion bytes. TB = 1 trillion bytes. Actual formatted capacity is less. Up to 36GB of system disk (for Windows) is reserved for system recovery software.

12TB 7200 RPM SATA-6G 3.5in Enterprise HDD	**Capacity**	12TB	
	Protocol	SATA	
	Form Factor	3.5"	
	Controller	AHCI	
	Reliability	2.0M hours	
	Rated Power On Hours	8760/yr	
	Annualized Failure Rate (based on Rated POH)	<0.62%	
	Rated for 24/7/365 operation	YES	
	Height	1 in; 2.54 cm	
	Width	**Media Diameter**	3.5 in; 8.9 cm
		Physical Size	4 in; 10.17 cm
	Interface	Serial ATA (6.0Gb/s), NCQ enabled	
	Synchronous Transfer Rate (Maximum)	Up to 600MB/s *	
	Buffer	256MB	
	Cache	Adaptive	
	Seek Time (typical reads, includes controller overhead, including settling)	**Single Track**	0.7 ms *
		Average	8.5 ms *
		Full Stroke	15.7 ms *
	Rotational Speed	7,200 rpm	

Technical Specifications - Storage Drives

Logical Blocks	23,437,770,752	
Operating Temperature	41° to 140° F (5° to 60° C)	
Performance	**Sequential Read**	up to 226MB/s*
	Sequential Write	up to 226MB/s*

*Actual performance may vary.

NOTE: For storage drives, GB = 1 billion bytes. TB = 1 trillion bytes. Actual formatted capacity is less. Up to 36GB of system disk (for Windows) is reserved for system recovery software.

Technical Specifications - Graphics

GRAPHICS

NVIDIA® RTX™ 6000 Ada 48GB	**Form Factor**	Full-Height Dual Slot (4.4” Height x 10.5” Length) Weight: 1230 grams / 2.71 lbs (with extender)
	Max Power Consumption	Power: 300 Watts Cooling: Active
	GPU Memory	48GB GDDR6 memory ECC Memory Bandwidth: Up to 960 GB/s Memory Width: 384 bits
	Connectors	4x DisplayPort 1.4a Quadro Sync II connector Stereo Sync Requires CEM 5.0 16-pin auxiliary power adapter
	Maximum Resolution	7680x4320 @ 120Hz
	Bus Type	PCI Express 4.0 x16
	Available Graphics Drivers	Windows 11 Windows 10 Linux® 64-bit
NVIDIA® RTX™ A6000 48GB	**Form Factor**	Full-Height Dual Slot (4.4” Height x 10.5” Length) Weight: 1230 grams / 2.71 lbs (with extender)
	Max Power Consumption	Power: 300 Watts Cooling: Active
	GPU Memory	48GB GDDR6 memory ECC optional Memory Bandwidth: Up to 768 GB/s Memory Width: 384 bit
	Connectors	4x DisplayPort 1.4a Quadro Sync II connector NVLink® Stereo Sync Requires 8-pin auxiliary power
	Maximum Resolution	7680x4320 @ 120Hz
	Bus Type	PCI Express 4.0 x16
	Available Graphics Drivers	Windows 11 Windows 10 Linux® 64-bit
AMD® Radeon™ Pro W7900 48GB	**Form Factor**	Full-Height Triple Slot (4.4” Height x 10.5” Length)
	Max Power Consumption	Power: 295W Cooling: Active
	GPU Memory	48GB GDDR6 memory Memory Bandwidth: Up to 864 GB/s Memory Width: 384 bit
	Connectors	3x DisplayPort 2.1 1x Enhanced Mini DisplayPort 2.1 Requires 2x 8-pin auxiliary power connectors
	Maximum Resolution	12288x6912 @ 120Hz

Technical Specifications - Graphics

	Bus Type	PCI Express 4.0 x16
	Available Graphics Drivers	Windows 11 Windows 10 Linux® 64-bit
NVIDIA® RTX™ 5000 Ada 32GB	**Form Factor**	Full-Height Dual Slot (4.4” Height x 13.85” Length) Weight: 1130 grams / 2.49 lbs (excluding extender)
	Max Power Consumption	Power: 250 Watts Cooling: Active
	GPU Memory	32GB GDDR6 memory ECC Memory Bandwidth: Up to 576 GB/s Memory Width: 256 bits
	Connectors	4x DisplayPort 1.4a Quadro Sync II connector Stereo Sync Requires CEM 5.0 16-pin auxiliary power adapter
	Maximum Resolution	7680x4320 @ 120Hz
	Bus Type	PCI Express 4.0 x16
	Available Graphics Drivers	Windows 11 Windows 10 Linux® 64-bit
NVIDIA® RTX™ A5000 24GB	**Form Factor**	Full-Height Dual Slot (4.4” Height x 10.5” Length) Weight: 1049 grams + 80 grams extender
	Max Power Consumption	Power: 230W Cooling: Active
	GPU Memory	24GB GDDR6 memory ECC optional Memory Bandwidth: Up to 768 GB/s Memory Width: 384 bit
	Connectors	4x DisplayPort 1.4a Quadro Sync II connector NVLink® Stereo Sync Requires 8-pin auxiliary power
	Maximum Resolution	7680x4320 @ 120Hz
	Bus Type	PCI Express 4.0 x16
	Available Graphics Drivers	Windows 11 Windows 10 Linux® 64-bit
NVIDIA® RTX 4500 Ada 24GB	**Form Factor**	Full-Height Dual Slot (4.4” Height x 10.5” Length)
	Max Power Consumption	210W
	GPU Memory	24GB GDDR6 Memory Bandwidth: 432 GB/s Memory Width: 192-bit

Technical Specifications - Graphics

	Connectors	4x DisplayPort 1.4a Requires: 1x 16-pin CEM 5 power connector (adapter may be needed)
	Maximum Resolution	4x @ 4096 x 2160 @ 120Hz 4x @ 5120 x 2880 @ 60Hz 2x @ 7680 x 4320 @ 60Hz
	Bus Type	PCI Exress 4.0 x16
	Available Graphics Drivers	Windows 10 Windows 11

NOTE: Not available at launch; available early 2024

NVIDIA® RTX A4500 20GB	**Form Factor**	Full-Height Dual Slot (4.4” Height x 10.5” Length) Weight: 1049 grams + 80 grams extender
	Max Power Consumption	Power: 200W Cooling: Active
	GPU Memory	20GB GDDR6 memory Memory Bandwidth: Up to 640 GB/s Memory Width: 320 bit
	Connectors	4x DisplayPort 1.4a Quadro Sync II connector NVLink® Stereo Sync Requires 8-pin auxiliary power
	Maximum Resolution	7680x4320 @ 120Hz
	Bus Type	PCI Express 4.0 x16
	Available Graphics Drivers	Windows 11 Windows 10 Linux® 64-bit

NVIDIA® RTX 4000 Ada 20GB	**Form Factor**	Full-Height Triple Slot (4.4” Height x 11.5” Length)
	Max Power Consumption	130W
	GPU Memory	20GB GDDR6 Memory Bandwidth: 360 GB/s Memory Width: 160-bit
	Connectors	4x DisplayPort 1.4a Requires: 1x 16-pin CEM 5 power connector (adapter may be needed)
	Maximum Resolution	4x @ 4096 x 2160 @ 120Hz 4x @ 5120 x 2880 @ 60Hz 2x @ 7680 x 4320 @ 60Hz
	Bus Type	PCI Express 4.0 x16
	Available Graphics Drivers	Windows 10 Windows 11
NVIDIA® RTX A4000 16GB	**Form Factor**	Full-Height Single Slot (4.4” Height x 9.5” Length) Weight: 500 grams

Technical Specifications - Graphics

	Max Power Consumption	Power: 140W Cooling: Active
	GPU Memory	16GB GDDR6 memory Memory Bandwidth: Up to 448 GB/s Memory Width: 256 bit
	Connectors	4x DisplayPort 1.4a Quadro Sync II connector Stereo Sync Requires 6-pin auxiliary power
	Maximum Resolution	7680x4320 @ 120Hz
	Bus Type	PCI Express 4.0 x16
	Available Graphics Drivers	Windows 11 Windows 10 Linux® 64-bit
NVIDIA® Long-Life RTX A4000E 16GB	**Form Factor**	Full-Height Single Slot (4.4” Height x 9.5” Length) Weight: 500 grams
	Max Power Consumption	Power: 140W Cooling: Active
	GPU Memory	16GB GDDR6 memory Memory Bandwidth: Up to 448 GB/s Memory Width: 256 bit
	Connectors	4x DisplayPort 1.4a Quadro Sync II connector Stereo Sync Requires 6-pin auxiliary power
	Maximum Resolution	7680x4320 @ 120Hz
	Bus Type	PCI Express 4.0 x16
	Available Graphics Drivers	Windows 11 Windows 10 Linux® 64-bit
NVIDIA® RTX™ 2000 Ada 16GB	**Form Factor**	Half Height Dual Slot (2.7" Height x 6.7" Length)
	Max Power Consumption	70W
	GPU Memory	16GB GDDR6 Memory Bandwidth: 224 GB/s Memory Width: 128-bit
	Connectors	4x Mini DisplayPort 1.4a
	Maximum Resolution	4x 4096 x 2160 @ 120 Hz 4x 5120 x 2880 @ 60 Hz 2x 7680 x 4320 @ 60 Hz
	Bus Type	PCI Express 4.0 x8
	Available Graphics Drivers	Windows 10 Windows 11

Technical Specifications - Graphics

NVIDIA® RTX A2000 12GB	**Form Factor**	Half-Height Dual Slot (2.713” Height x 6.6” Length) Weight: 306 grams
	Max Power Consumption	Power: 70W Cooling: Active
	GPU Memory	12GB GDDR6 memory Memory Bandwidth: Up to 288 GB/s Memory Width: 192 bit
	Connectors	4x mini-DisplayPort 1.4a
	Maximum Resolution	7680x4320 @ 120Hz
	Bus Type	PCI Express 4.0 x16
	Available Graphics Drivers	Windows 11 Windows 10 Linux® 64-bit
NVIDIA® Long-Life RTX A2000E 12GB	**Form Factor**	Half-Height Dual Slot (2.713” Height x 6.6” Length) Weight: 306 grams
	Max Power Consumption	Power: 70W Cooling: Active
	GPU Memory	12GB GDDR6 memory Memory Bandwidth: Up to 288 GB/s Memory Width: 192 bit
	Connectors	4x mini-DisplayPort 1.4a
	Maximum Resolution	7680x4320 @ 120Hz
	Bus Type	PCI Express 4.0 x16
	Available Graphics Drivers	Windows 11 Windows 10 Linux® 64-bit
NVIDIA® T1000 8GB	**Form Factor**	Half-Height Single Slot (2.713” Height x 6.137” Length) Weight: 132.6 grams
	Max Power Consumption	Power: 50W Cooling: Active
	GPU Memory	8GB GDDR6 memory Memory Bandwidth: Up to 160 GB/s Memory Width: 128 bit
	Connectors	4x mini-DisplayPort 1.4a
	Maximum Resolution	7680x4320 @ 120Hz
	Bus Type	PCI Express 3.0 x16
	Available Graphics Drivers	Windows 11 Windows 10 Linux® 64-bit
NVIDIA® Long-Life T1000E 8GB	**Form Factor**	Half-Height Single Slot (2.713” Height x 6.137” Length) Weight: 132.6 grams

Technical Specifications - Graphics

	Max Power Consumption	Power: 50W Cooling: Active
	GPU Memory	8GB GDDR6 memory Memory Bandwidth: Up to 160 GB/s Memory Width: 128 bit
	Connectors	4x mini-DisplayPort 1.4a
	Maximum Resolution	7680x4320 @ 120Hz
	Bus Type	PCI Express 3.0 x16
	Available Graphics Drivers	Windows 11 Windows 10 Linux® 64-bit
NVIDIA® T1000 4GB	**Form Factor**	Half-Height Single Slot (2.713” Height x 6.137” Length) Weight: 132.6 grams
	Max Power Consumption	Power: 50W Cooling: Active
	GPU Memory	4GB GDDR6 memory Memory Bandwidth: Up to 160 GB/s Memory Width: 128 bit
	Connectors	4x mini-DisplayPort 1.4a
	Maximum Resolution	7680x4320 @ 120Hz
	Bus Type	PCI Express 3.0 x16
	Available Graphics Drivers	Windows 11 Windows 10 Linux® 64-bit
NVIDIA® T400 4GB	**Form Factor**	Half-Height Single Slot (2.713” Height x 6.137” Length) Weight: 123.5 grams
	Max Power Consumption	Power: 30W Cooling: Active
	GPU Memory	4GB GDDR6 memory Memory Bandwidth: Up to 80 GB/s Memory Width: 64 bit
	Connectors	3x mini-DisplayPort 1.4a
	Maximum Resolution	7680x4320 @ 120Hz
	Bus Type	PCI Express 3.0 x16
	Available Graphics Drivers	Windows 11 Windows 10 Linux® 64-bit
AMD® Radeon™ Pro W6800 32GB	**Form Factor**	Full-Height Dual Slot (4.4” Height x 10.5” Length) Weight: 850 grams
	Max Power Consumption	Power: 261W Cooling: Active

Technical Specifications - Graphics

	GPU Memory	32GB GDDR6 memory Memory Bandwidth: Up to 512 GB/s Memory Width: 256 bit
	Connectors	6x mini-DisplayPort 1.4 Requires 8-pin+6-pin auxiliary power
	Maximum Resolution	7680x4320 @ 60Hz
	Bus Type	PCI Express 4.0 x16
	Available Graphics Drivers	Windows 11 Windows 10 Linux® 64-bit
AMD® Radeon™ Pro W7600 8GB	**Form Factor**	Full-Height Single Slot (4.38" Height x 9.5" Length)
	Max Power Consumption	130W
	GPU Memory	8GB GDDR6 Memory Bandwidth: 288 GB/s Memory Width: 128-bit
	Connectors	4x DP 2.1 Requires: 1x 6-pin PCIe Aux Power
	Maximum Resolution	4x @ 3840x2160 (4K) 4x @ 5120x2880 (5K) 2x @ 7680x4320 (8K)
	Bus Type	PCI Express 4.0 x8
	Available Graphics Drivers	Windows 10 Windows 11
AMD® Radeon™ Pro W6600 8GB	**Form Factor**	Full-Height Single Slot (4.38” Height x 9.50” Length) Weight: 132.6 grams
	Max Power Consumption	Power: 122W Cooling: Active
	GPU Memory	8GB GDDR6 memory Memory Bandwidth: Up to 224 GB/s Memory Width: 128 bit
	Connectors	4x DisplayPort 1.4 Requires 6-pin auxiliary power
	Maximum Resolution	7680x4320 @ 60Hz
	Bus Type	PCI Express 4.0 x16 (x8 electrical)
	Available Graphics Drivers	Windows 11 Windows 10 Linux® 64-bit
AMD® Radeon™ RX 6400 4GB	**Form Factor**	Half-Height Single Slot (4.4” Height x 10.5” Length) Weight: 155 grams
	Max Power Consumption	Power: 50W Cooling: Active
	GPU Memory	4GB GDDR6 memory Memory Bandwidth: Memory Width:

Technical Specifications - Graphics

	Connectors	1x DisplayPort 1.4a 1x HDMI
	Maximum Resolution	7680x4320 @ 60Hz
	Bus Type	PCI Express 4.0 x4
	Available Graphics Drivers	Windows 11 Windows 10 Linux® 64-bit
Intel® Arc Pro A40 6GB	**Form Factor**	Half-Height Single Slot (2.7” Height x 6.6” Length) Weight: 220 grams
	Max Power Consumption	Power: 50W Cooling: Active
	GPU Memory	6GB GDDR6 memory Memory Bandwidth: 192GB Memory Width: 96 bit
	Connectors	4x mini- DisplayPort 1.4
	Maximum Resolution	7680x4320 @ 60Hz
	Bus Type	PCI Express 4.0 x8
	Available Graphics Drivers	Windows 11 Windows 10

Notes for all graphics cards:

- Some graphics and GPU compute cards can consume a great deal of power, thus combinations of cards with other components may exceed a particular power supply’s output capability.
- Some graphics and GPU compute cards require supplemental power cables.
- Not all chassis/PSU configurations have enough supplemental power cables of the correct type for all graphics configurations.

Refer to the Power Supply section within Overview for more information.

OPTICAL AND REMOVABLE STORAGE

HP 9.5mm Slim Blu-Ray Writer	**Description**		9.5mm height, tray-load
	Mounting Orientation		Either horizontal or vertical
	Interface Type		SATA/ATAPI
	Dimensions (WxHxD)		128 x 9.5 x 127mm
	Supported Media Types		BD-ROM BD-R BD-RE DVD+R DVD+RW DVD+R DL DVD-R DL DVD-R DVD-RW CD-R CD-RW
	Disc Capacity	**DVD-ROM**	8.5 GB DL or 4.7 GB standard

	Blu-ray	25 GB (single-layer) 50 GB (dual-layer) 100/128 GB (BDXL)
	Full Stroke DVD	< 230 ms (seek)
	Full Stroke CD	< 220 ms (seek)
	Blu-ray	< 230 ms (seek) (Full Stroke Blu-ray)
	Startup Time	(Time to drive ready from tray loading) BD-ROM (SL/DL) 25S / 28S BD-R (SL/DL) 25S / 28S BD-RE (SL/DL) 25S / 28S DVD-ROM (SL/DL) 18S / 18S DVD-R (SL/DL) 25S / 25S DVD-RW 25S DVD+R (SL/DL) 25S / 25S DVD+RW 25S CD-ROM 15S
Maximum Data Transfer Rates	**CD ROM Read**	CD-ROM, CD-R Up to 24X CD-RW Up to 24X
	DVD ROM Read	DVD+RW Up to 8X DVD-RW Up to 8X DVD+R DL Up to 8X DVD-R DL Up to 8X DVD-ROM Up to 8X DVD-ROM DL Up to 8X DVD+R Up to 8X DVD-R Up to 8X
	Blu-ray	BD-ROM Up to 6X BD-ROM DL Up to 6X BD-R Up to 6X BD-R DL Up to 6X BD-R Up to 6X BD-RE SL/DL Up to 6X
Power	**Source**	SATA DC power receptacle
	DC Power Requirements	5 VDC ± 5%-100 mV ripple p-p
	DC Current	5 VDC -900 mA typical, 2000mA maximum
Operating Environmental (all conditions non-condensing)	**Temperature**	41° to 122° F (5° to 50° C)
	Relative Humidity	10% to 80%
	Maximum Wet Bulb Temperature	84° F (29° C)
Operating Systems Supported	Windows 11, Windows 10, Windows 7 Professional 64-bit, Red Hat® Enterprise Linux® (RHEL) 8, 9 Desktop/Workstation SUSE Linux® Enterprise Desktop 15 Ubuntu 20.04, 22.04 LTS No driver is required for this device. Native support is provided by the operating system.	
Kit Contents	9.5mm Slim BDXL Blu-Ray Writer, 5.25" ODD Bay adapter/carrier, slim SATA data/power cable, installation guide	

As Blu-ray is a new format containing new technologies, certain disc, digital connection, compatibility and/or performance issues may arise, and do not constitute defects in the product. Flawless playback on all systems is not guaranteed. In order for some Blu-ray titles to play, they may require a DVI or HDMI digital connection and your display may require HDCP support. HD-DVD movies cannot be played on this workstation.

NOTE: HD-DVD disks cannot be played on the DVD-ROM drive. No support for DVD-RAM. Actual speeds may vary. Don't copy copyright-protected materials. Double Layer discs can store more data than single layer discs. Discs burned with this drive may not be compatible with many existing single-layer DVD drives and players. Flawless playback on all systems is not guaranteed.

HP 9.5mm Slim DVD Writer	**Description**	9.5mm height, tray-load	
	Mounting Orientation	Either horizontal or vertical	
	Interface Type	SATA/ATAPI	
	Dimensions (WxHxD)	128 x 9.5 x 127mm	
	Supported Media Types	DVD+R DVD+RW DVD+R DL DVD-R DL DVD-R DVD-RW CD-R CD-RW	
	Disc Capacity	**DVD-ROM**	8.5 GB DL or 4.7 GB standard
		Full Stroke DVD	< 200 ms (seek)
		Full Stroke CD	< 200 ms (seek)
	Maximum Data Transfer Rates	**CD ROM Read**	CD-ROM, CD-R Up to 24X CD-RW Up to 24X
		DVD ROM Read	DVD+RW Up to 8X DVD-RW Up to 8X DVD+R DL Up to 8X DVD-R DL Up to 8X DVD-ROM Up to 8X DVD-ROM DL Up to 8X DVD+R Up to 8X DVD-R Up to 8X
	Power	**Source**	SATA DC power receptacle
		DC Power Requirements	5 VDC ± 5%-100 mV ripple p-p
		DC Current	5 VDC -< 800 mA typical, <1600 mA maximum
	Operating Environmental (all conditions non-condensing)	**Temperature**	41° to 122° F (5° to 50° C)
		Relative Humidity	10% to 80%
		Maximum Wet Bulb Temperature	84° F (29° C)
	Operating Systems Supported	Windows 11, Windows 10, Windows 7 Professional 64-bit, Windows Vista Business 64*, Windows 2000. Red Hat® Enterprise Linux® (RHEL) 8, 9 Desktop/Workstation SUSE Linux® Enterprise Desktop 15 Ubuntu 20.04, 22.04 LTS	

		* No driver is required for this device. Native support is provided by the operating system	
	Kit Contents	HP SATA DVD Writer drive, installation guide.	

NOTE: Actual speeds may vary. No support for DVD-RAM (DVD Writer). Does not permit copying of commercially available DVD movies or other copyright protected materials. Intended for creation and storage of your original material and other lawful uses. Double Layer discs can store more data than single layer discs. However, double-layer discs burned with this drive may not be compatible with many existing single-layer DVD drives and players.

HP 9.5mm Slim DVD-ROM	**Description**	9.5mm height, tray-load	
	Mounting Orientation	Either horizontal or vertical	
	Interface Type	SATA/ATAPI	
	Dimensions (WxHxD)	128 x 9.5 x 127mm	
	Disc Capacity	**DVD-ROM**	Single layer: Up to 4.7 GB Double layer: Up to 8.5 GB
	Access Times	**DVD-ROM Single Layer**	< 110 ms (typical)
		CD-ROM Mode 1	< 110 ms (typical)
		Full Stroke DVD	< 230 ms (typical)
		Full Stroke CD	< 220 ms (typical)
	Power	**Source**	SATA DC power receptacle
		DC Power Requirements	5 VDC ± 5%-100 mV ripple p-p
		DC Current	5 VDC -< 800 mA typical, <1600 mA maximum
	Operating Environmental (all conditions non-condensing)	**Temperature**	41° to 122° F (5° to 50° C)
		Relative Humidity	10% to 80%
		Maximum Wet Bulb Temperature	84° F (29° C)
	Operating Systems Supported	Windows 11, Windows 10, Windows 8.1, Windows 7 Professional 64-bit Red Hat® Enterprise Linux® (RHEL) 8, 9 Desktop/Workstation SUSE Linux® Enterprise Desktop 15 Ubuntu 20.04, 22.04 LTS No driver is required for this device. Native support is provided by the operating system.	
	Kit Contents	9.5mm Slim DVD-ROM Drive, 5.25"" ODD Bay adapter/carrier, slim SATA data/power cable, installation guide	

NOTE: Actual speeds may vary. No support for DVD-RAM (DVD Writer). Does not permit copying of commercially available DVD movies or other copyright protected materials. Intended for creation and storage of your original material and other lawful uses. Double Layer discs can store more data than single layer discs. However, double-layer discs burned with this drive may not be compatible with many existing single-layer DVD drives and players.

Technical Specifications - Networking and Communications

NETWORKING AND COMMUNICATIONS

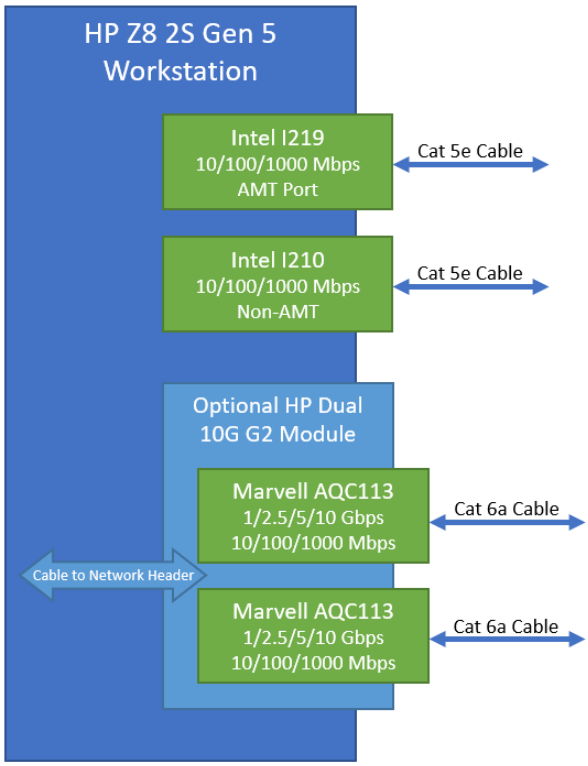

Integrated Intel® I219LM PCIe GbE Controller (Intel® vPro® with Intel® AMT 16.01)	**Connector**	RJ-45
	Cabling	Twisted pair up to 100m
	Controller	Intel® I219LM GbE platform LAN connect networking controller
	Memory	3 KB Tx and 3KB Rx FIFO packet buffer memory
	Data Rates Supported	10/100/1000Mbps
	Compliance	IEEE 802.3x, 802.3az, 802.1as/1588, 802.1p, 802.1Q, 802.3, 802.3ab, 802.3i, 802.3u, 802.3z
	Bus Architecture	PCI Express and SMBus
	Data Transfer Mode	PCIe-based interface for active state operation (S0 state) and SMBus for host and management traffic (Sx low power state)
	Power Requirements	0.5 Watts Max
	Boot ROM Support	Yes
	Network Transfer Mode	Full-duplex; Half-duplex
	Network Transfer Rate	0BASE-T (half-duplex) 10 Mbps 10BASE-T (full-duplex) 20 Mbps 100BASE-TX (half-duplex) 100 Mbps 100BASE-TX (full-duplex) 200 Mbps 1000BASE-T (full-duplex) 2000 Mbps
	Management Capabilities	vPro®, WOL, auto MDI crossover, PXE, Muti-port teaming, RSS, ACPI, Advanced cable diagnostic, loopback modes, AMT 16.0 support, Circuit Breaker, VLAN, Multicast Listener Discovery (MLD), iSCSI

Technical Specifications - Networking and Communications

[1]Requires activation and a system with a corporate network connection, an Intel® AMT enabled chipset, and network hardware and software. For notebooks, Intel AMT may be unavailable or limited over a host OS-based VPN, when connecting wirelessly, on battery power, sleeping, hibernating, or powered off. Results dependent upon hardware, setup, and configuration. For more information, visit: https://www.intel.com/content/www/us/en/architecture-and-technology/intel-active-managementtechnology.
html

I210 (integrated)	**Connector**	RJ-45
	Cabling	Up to 100m with Cat 5e or better
	Controller	Intel I210
	Memory	N/A
	Data Rates Supported	10/100/1000Mbps
	Compliance	IEEE 802.3az, 802.3u, 802.3z, 802.3ab, 802.1AS/1588, 802.1Qav
	Bus Architecture	PCIe
	Data Transfer Mode	BASE-T
	Power Requirements	N/A
	Network Transfer Mode	BASE-T
	Network Transfer Rate	10/100/1000Mbps
	Management Capabilities	Wake-on-LAN, PXE, UEFI
	Kit Contents	Integrated into system

NVIDIA® Mellanox® ConnectX-6 DX Dual Port 10/25GbE SFP28 NIC	**Connector**	2 x SFP28 Transceiver Cage (Dual Port)*
	Cabling	Depends on transceiver pairing. Typically OM4 or higher MMF LC fiber optic cabling with LC SFP28 Transceivers.
	Controller	ConnectX6-DX
	Memory	256Mbit SPI Quad Flash Device
	Data Rates Supported	1/10/25GbE
	Compliance	– IEEE 802.3by 25 Gigabit Ethernet – IEEE 802.3ae 10 Gigabit Ethernet – IEEE 802.3ap based auto-negotiation and KR startup – IEEE 802.3ad, 802.1AX Link Aggregation – IEEE 802.1Q, 802.1P VLAN tags and priority – IEEE 802.1Qau (QCN) – Congestion Notification – IEEE 802.1Qaz (ETS) – IEEE 802.1Qbb (PFC) – IEEE 802.1Qbg – IEEE 1588v2 – Jumbo frame support (9.6KB) – Safety: CB/cTUVus/CE – EMC: CE/FCC/VCCI/RCM – RoHS Compliant – KCC – CAN ICES-3 (B) – NM EN 55035/55032 (Morocco) – UKCA

Technical Specifications - Networking and Communications

	Bus Architecture	PCIe Gen 4 x8
	Data Transfer Mode	PCI Express - stores and accesses Ethernet fabric connection information and packet data
	Power Requirements	11.5 Watts (typical)
	Network Transfer Rate	1Gbps, 10Gbps, 25Gbps Note: Network Transfer Rate depends on transceiver model.*
	Kit Contents	NVIDIA® Mellanox® ConnectX-6 DX Dual Port 10/25GbE SFP28 NIC
HP Dual Port 10GBase-T NIC Module G2	**Networking Interface**	2 RJ-45
	System Interface	Cabled from Dedicated Rear I/O Slot
	Networking Speeds Supported	10Gbps, 5Gbps, 2.5Gbps,1Gbps, 100Mbps, 10Mbps
	Cabling (up to 100m)	Cat5e (or higher) for 1Gbps Cat6a (or higher) for 10Gbps
	Power Consumption (active-typical)	5.5W at 1Gbps 11.2W at 10Gbps
	Physical Dimensions	0.875 in x 3 in x 2.75 in
	Connect Speed LED Indicators	Link/Activity LED • Off = No link • Blinking = Activity Speed LED • Amber = 1Gbps • Green = 10Gbps
	Operating Temperature	0 °C to 55 °C (32 °F to 131 °F)
Intel® X550 10GBASE-T Dual Port NIC	**Connector**	2 x RJ-45
	Cabling	Cat5 (or higher) for 100Mbps Cat5e (or higher) for 1Gbps, 2.5Gbps, or 5Gbps Cat6 (or higher) for 10Gbps up to 55m Cat6a (or higher) for 10Gbps up to 100m
	Controller	Intel X550-AT2
	Memory	Jumbo Frames up to 15.5KB, 64 Tx and 64Rx Queues per port, 160KB/port of programmable memory transmit buffers
	Data Rates Supported	100Mbps (BASE-TX), 1Gbps (BASE-T, 2.5Gbps, 5Gbps, 10Gbps
	Compliance	802.1q (VLAN), 802.1Qbb, 802.1p, 802.1Qaz
	Bus Architecture	PCIe 3x4
	Data Transfer Mode	PCIe Gen 3 x4 based interface
	Power Requirements	3.9W at 100Mbps 5.5W at 1Gbps 11.2W at 10Gbps
	Boot ROM Support	Yes
	Network Transfer Mode	Auto negotiation between 1GbE, 2.5GbE, 5GbE and 10GbE

Technical Specifications - Networking and Communications

	Management Capabilities	DMI 2.0 Support, Windows Management Instrumentation (WMI) and SNMP, PXE 2.0 through boot ROM, Multi-mode I/O Virtualization, VxLAN, VMDq, VLAN support with VLAN tag insertion
	Kit Contents	Intel® X550 10GBASE-T Dual Port NIC
Intel® I225-T1 Single Port 2.5GbE PCIe NIC	**Connector**	RJ-45 (Single Port)
	Cabling	Cat5e (or better) up to 100m
	Controller	Intel® Ethernet I225 Controller
	Memory	Jumbo Frames up to 9.5KB, 4 Tx and Rx Queues,
	Data Rates Supported	2.5GbE, 1GbE, 100MbE, 10MbE
	Compliance	IEEE 802.3 auto negotiation, 802.3x, 802.3z
	Bus Architecture	PCIe Gen 3.1x1
	Data Transfer Mode	PCIe-based interface for active state operation
	Power Requirements	1.9 Watts (typical)
	Management Capabilities	WOL, PXE 2.1, Power Management Protocol Offload (proxying), MAC Power Management, Active State Power Management,
	Kit Contents	Intel® I225-T1 1-Port 2.5GbE NIC with standard height bracket attached and Low-profile bracket included Product Literature
Intel® Ethernet I350-T4V2 4-Port 1Gb NIC	**Connector**	4x RJ-45 (Quad Port)
	Cabling	Cat3 (or higher) for 10Mbps Cat5 (or higher) for 100Mbps Cat5e (or higher) for 1Gbps up to 100m
	Controller	Intel® I350
	Memory	Jumbo Frames up to 9.5KB, 8 Tx/Rx Queue pairs per port, Main Internal memory is Error Code Correcting
	Data Rates Supported	10Mbps, 100Mbps, 1Gbps
	Compliance	IEEE 802.3 auto negotiation, 802.3, 802.3u, 802.3ab, 802.3x, 802.3z, IEEE1588 protocol and 802.1AS implementation, 802.3az EEE
	Bus Architecture	PCI Express 2.1 x4
	Data Transfer Mode	PCIe-based interface for active state operation
	Power Requirements	5W
	Network Transfer Mode	Multi-speed, full, and half-duplex
	Network Transfer Rate	10BASE-T 100BASE-Tx 1000BASE-T
	Management Capabilities	WOL, PXE 2.1, UEFI, Power Management Protocol Offload (proxying), MAC Power Management, Active State Power Management, VLAN, ACPI
	Kit Contents	Intel® Ethernet I350-T4V2 4-Port 1Gb NIC with full-height bracket installed Low-profile bracket included
Allied Telesis AT-2911T/2-901 Dual Port 1GbE NIC	**Connector**	2 x RJ-45 (Dual Port)
	Cabling	Cat3 (or higher) for 10Mbps Cat5 (or higher) for 100Mbps Cat5e (or higher) for 1Gbps up to 100m

Technical Specifications - Networking and Communications

	Memory	17 Rx and 16 Tx queues
	Data Rates Supported	10/100/1000 Mbps
	Compliance	IEEE 802.1p (Quality of Service), IEEE 802.1Q (VLANs), IEEE 802.2 (LLC), IEEE 802.3ac (MAC), IEEE 802.3x (Flow control auto-negotiation), IEEE 802.3z (1000 Base-X), IEEE 802.3ad (Link aggregation), IEEE 802.3ab (10/100/1000T) RoHS, UL, FCC/EN55022 Class A, TUV, EN55024, CE, C-TICK, VCCI
	Bus Architecture	PCIe 2x1
	Data Transfer Mode	PCIe-based interface
	Power Requirements	2.4 Watts (typical)
	Management Capabilities	VLAN support, Link aggregation LACP, Link aggregation smart switch, Failover, Smart Load Balancing (SLB), iSCSI boot support, Windows Management Instrumentation (WMI), PXE 2.1, SNMP
	Kit Contents	Allied Telesis AT-2911T/2-901 Dual Port 1GbE NIC with low-profile bracket attached and standard bracket included
Allies Telesis AT-2914SX/LC 1GB LC Fiber NIC	**Connector**	LC Fiber (Single Port)
	Cabling	50/125 µm (core/cladding) multimode fiber optic cable up to 500m 62.5/125 µm (core/cladding) multimode fiber optic cable up to 220m
	Memory	Jumbo Frames up to 9.6KB
	Data Rates Supported	1000SX (1GbE Fiber at 850nm Wavelength)
	Compliance	IEEE 802.1p (Quality of Service), IEEE 802.1Q (VLANs), IEEE 802.2 (LLC), IEEE 802.3ac (MAC), IEEE 802.3x (Flow control auto-negotiation), IEEE 802.3z (1000 Base-X), IEEE 802.3ad (Link aggregation) RoHS, UL, FCC/EN55022 Class A, TUV, EN55024, CE, C-TICK, VCCI
	Bus Architecture	PCIe x1
	Data Transfer Mode	PCIe-based interface
	Power Requirements	1.5 Watts (typical)
	Network Transfer Rate	1000SX only (1GbE Fiber at 850nm Wavelength)
	Management Capabilities	UEFI, Smart Load Balancing and failover, Link aggregation (IEEE802.3ad), Generic trunking (FEC/GEC) / IEEE 802.3ad-draft static, VLAN Support
	Kit Contents	Allied Telesis AT-2914SX/LC 1GB LC Fiber NIC with low-profile bracket attached and standard height bracket included
Intel® AX210 Wi-Fi 6E non-vPro + Bluetooth® 5.2 wireless card with External Antenna WLAN	**Connector**	Wireless
	Cabling	N/A
	Controller	Intel® AX210
	Data Rates Supported	Wi-Fi 6e (2.4GHz/5GHz/6GHz)
	Compliance	Wi-Fi Alliance* Wi-Fi Alliance CERTIFIED 6, WiFi CERTIFIED a/b/g/n/ac, WMM, WMM-Power Save, WPA2, WPA3, Wi-Fi Direct, and Wi-Fi Agile Multiband IEEE WLAN Standard 802.11-2016, 802.11a, b, d, e, g, h, I, k, n, r, u, v, w, ac, and ax, Bluetooth® 5.2
	Bus Architecture	PCIe G3x1 for WLAN, USB3.1G1 for BT
	Management Capabilities	Authentication Protocols: 802.1X EAP-TLS, EAP-TTLS/MSCHAPv2, PEAPv0 - MSCHAPv2 (EAP-SIM, EAP-AKA, EAP-AKA') Encryption: 128-bit AES-CCMP, 256-bit AES-GCMP

Technical Specifications - Networking and Communications

	UEFI
Kit Contents	Intel® AX210 Wi-Fi 6 + Bluetooth® 5.2 PCIe NIC External Dipole Antenna Installation Instructions

*Wi-Fi 6E requires a Wi-Fi 6E router, sold separately to function in the 6GHz band. Availability of public wireless access points limited. Wi-Fi 6E is backwards compatible with prior 802.11 specs. And available in countries where Wi-Fi 6E is supported.

Date of change:	Version History:		Description of change:
March 1, 2023	From v1 to v2	Changed	Optical and Removable Storage, Networking and Communications sections and Changed Format
March 30, 2023	From v2 to v3	Changed	Image page 1
April 1, 2023	From v3 to v4	Changed	Format
May 1, 2023	From v4 to v5	Changed	Power Supply section
June 1, 2023	From v5 to v6	Changed	Graphics, Storage, Networking and Communications, Social and Environmental Responsibility, Overview sections
July 1, 2023	From v6 to v7	Added	HP Remote System Controller section
		Changed	Optical and Removable Storage, Networking and Communications sections
August 1, 2023	From v7 to v8	Changed	Storage Drives, Social and Environmental Responsibility sections
August 1, 2023	From v8 to v9	Changed	ENVIRONMENTAL DATA section
September 1,2023	From v9 to v10	Changed	Overview, NETWORKING AND COMMUNICATIONS sections
September 25, 2023	From v10 to v11	Changed	SOFTWARE AND SECURITY section
October 1, 2023	From v11 to v12	Changed	Input Devices section
November 1, 2023	From v12 to v13	Changed	PCIe Solid State Drives, Multimedia and Audio Devices, Input Devices, Social and Environmental Responsibility sections
December 1, 2023	From v13 to v14	Changed	Other Hardware, Social and Environmental Responsibility sections
February 1, 2024	From v14 to v15	Changed	STORAGE/HARD DRIVES, Social and Environmental Responsibility sections
March 1, 2024	From v15 to v16	Changed	Graphics section
April 1, 2024	From v16 to v17	Changed	HP Remote System Controller, Certification and Compliance sections
April 8, 2024	From v17 to v18	Changed	Networking and Communications section
May 1, 2024	From v18 to v19	Changed	Graphics, Social and Environmental Responsibility sections
June 1, 2024	From v19 to v20	Changed	Storage section
June 12, 2024	From v20 to v21	Changed	Software section
August 1, 2024	From v21 to v22	Changed	Graphics, Memory sections
August 29, 2024	From v22 to v23	Changed	NETWORKING AND COMMUNICATIONS section
September 2, 2024	From v23 to v24	Changed	Processors, NETWORKING AND COMMUNICATIONS sections
September 26, 2024	From v24 to v25	Changed	Maximum Altitude section
December 4, 2024	From v25 to v26	Changed	BIOS section
June 9, 2025	From v26 to v27	Changed	Operating Systems, Optical and Removable Storage sections
June 20, 2025	From v27 to v28	Changed	Supported Drive Interfaces section
August 20, 2025	From v28 to v29	Changed	Memory section
September 1, 2025	From v29 to v30	Changed	Graphics section
October 1, 2025	From v30 to v31	Changed	Other Hardware section

© 2025 HP Development Company, L.P. The information contained herein is subject to change without notice. The only warranties for HP products and services are set forth in the express warranty statements accompanying such products and services. Nothing herein should be construed as constituting an additional warranty. HP shall not be liable for technical or editorial errors or omissions contained herein. Intel, Intel Core, Xeon, Pentium, Thunderbolt and vPro are trademarks of Intel Corporation in the U.S. and other countries. Microsoft and Windows are either registered trademarks or trademarks of Microsoft Corporation in the United States and/or other countries. AMD is a trademark of Advanced Micro Devices, Inc. ENERGY STAR® is a registered trademark owned by the U.S. government. Linux® is the registered trademark of Linus Torvalds in the U.S. and other countries. NVIDIA, NVS and Quadro and the NVIDIA logo are trademarks and/or registered trademarks of NVIDIA Corporation in the U.S. and other countries. Red Hat® is a registered trademark of Red Hat, Inc. in the United States and other countries. SD is a trademark or registered trademark of SD-3C in the United States, other countries or both. Bluetooth is a trademark of its proprietor used by HP Inc. under license.