Overview

HP Pro Mini 400 G9 Desktop PC



1. Type-C® SuperSpeed USB 20Gbps signaling rate port (charge support up to 5V/3A)
2. Type-A SuperSpeed USB 10Gbps signaling rate port
3. Type-A SuperSpeed USB 10Gbps signaling rate port (charge support up to 5V/1.5A)
4. Combo Audio Jack with CTIA and OMTP and headset support
5. Dual-state power button
6. Hard drive activity light

Not shown

(2) M.2 (1 as M.2 2230 socket for WLAN/Bluetooth® and 1 as M.2 2280 socket for storage)

(1) 2.5" internal storage drive bay

Overview

HP Pro Mini 400 G9 Desktop PC

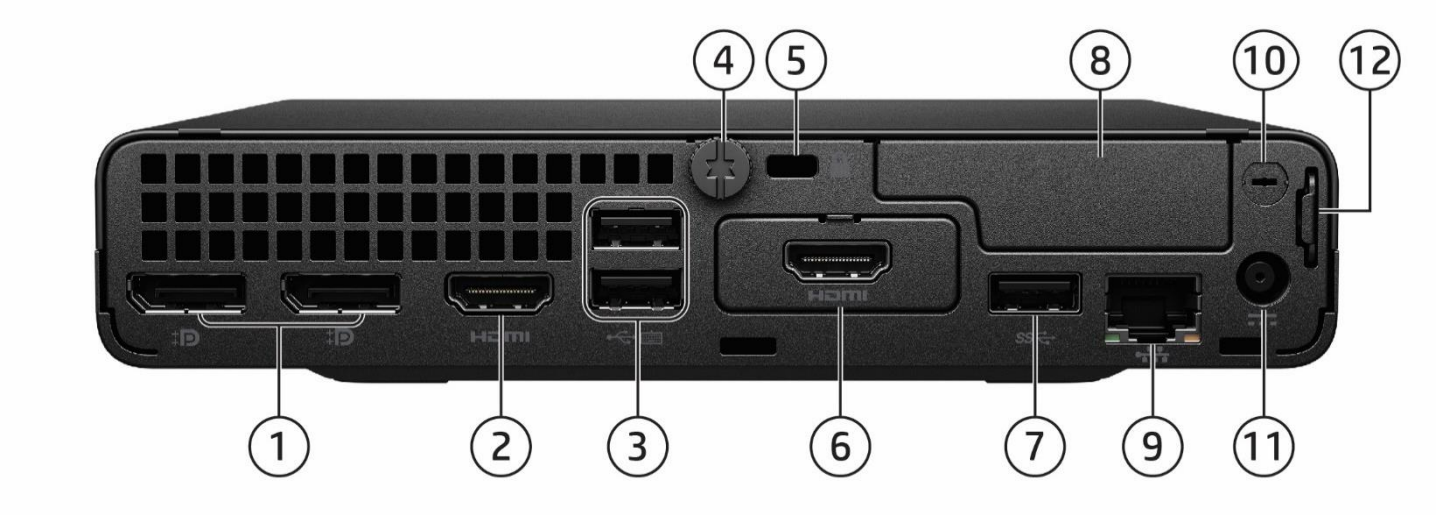

1. 2x Dual Mode DisplayPort™ 1.4a(DP++)
2. HDMI 2.1
3. 2x Type-A SuperSpeed USB 5Gbps signaling rate port (Supporting wake from S4/S5 with keyboard/mouse connected and enabled in BIOS)
4. Cover release thumbscrew
5. Standard cable lock slot (10 mm)
6. Flex Port 1, choice of:
   - DisplayPort™1.4a with HBR3
   - HDMI 2.1a
   - VGA
   - Serial[1]
   - Type-C® SuperSpeed USB 10Gbps signaling rate port w/ DisplayPort™ Alt mode and power intake via Type-C® Power Delivery up to 100W
7. Type-A SuperSpeed USB 10Gbps signaling rate port
8. Flex Port 2[2], choice of:
   - 2x Type-A Hi-Speed USB 480Mbps signaling rate port
   - Serial
   - 2nd External Antenna
9. RJ45 network connector
10. External WLAN antenna opening[2]
11. Power connector
12. Retractable Padlock loop

Not shown

Slots
(1) Internal M.2 2230 connector for WLAN
(1) Internal M.2 SSD storage 2280 connector

Mounting
Support for
- Dual VESA Sleeve V4 Standalone
-Quick Release Bracket
- B200/B300/B500/B550/B560/B600 Mounting bracket
- Integrated Work Center Stand
- HP Single Monitor Arm

1. Sold separately or as an optional feature.
2. Must be configured at time of purchase.

Overview

HP Pro SFF 400 G9 Desktop PC

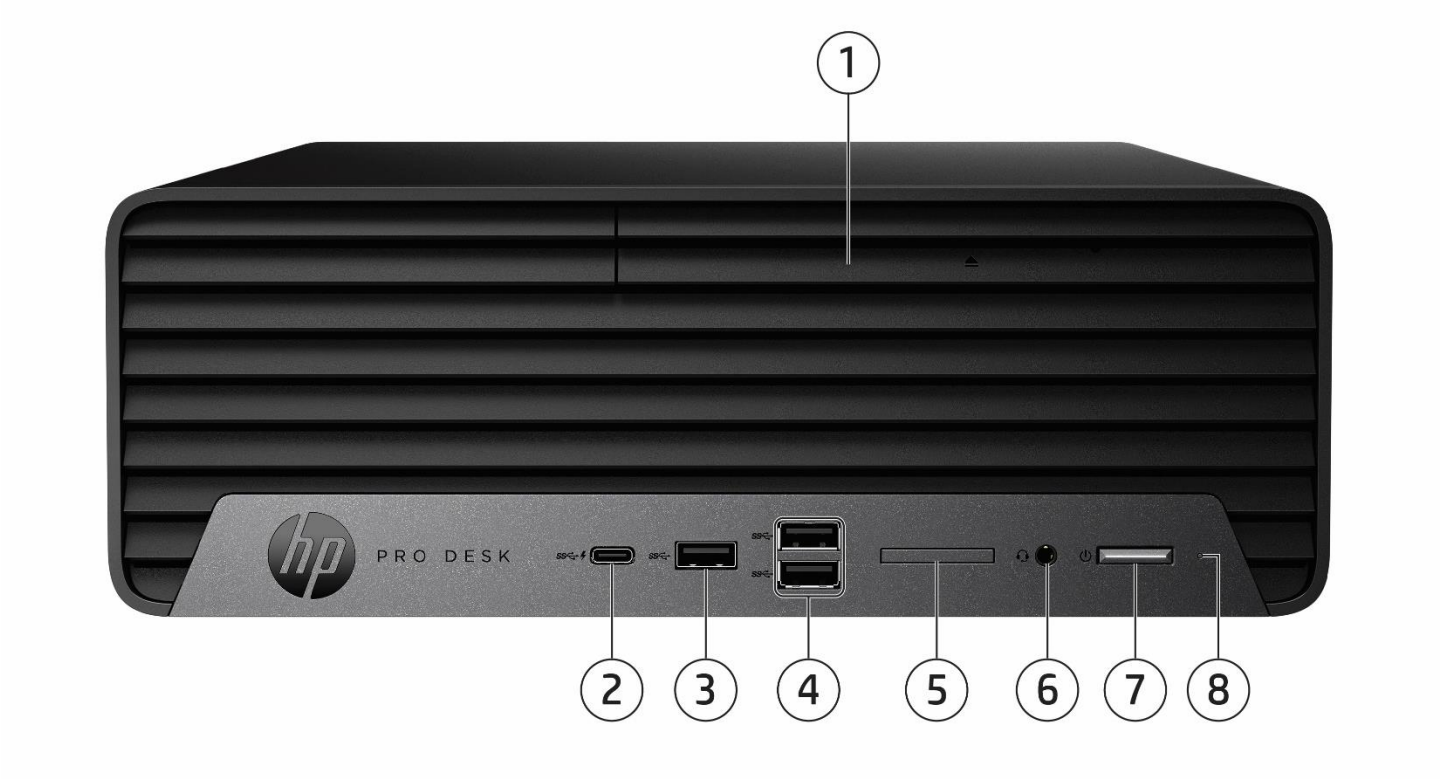

1. Slim optical drive (optional)
2. (1) Type-C® SuperSpeed USB 10Gbps signaling rate port
3. (1) Type-A SuperSpeed USB 10Gbps signaling rate port
4. (2) Type-A SuperSpeed USB 10Gbps signaling rate port
5. SD card 4.0 reader (optional)
6. Combo Audio Jack with CTIA and OMTP and headset support
7. Dual-state power button
8. Hard drive activity light

Not shown

(1) PCI Express x16

(1) PCI Express x1

(2) M.2 (1 as M.2 2230 socket for WLAN/Bluetooth®[1] and 1 as M.2 2280 socket for storage)

1. Must be configured at time of purchase.

Overview

HP Pro SFF 400 G9 Desktop PC

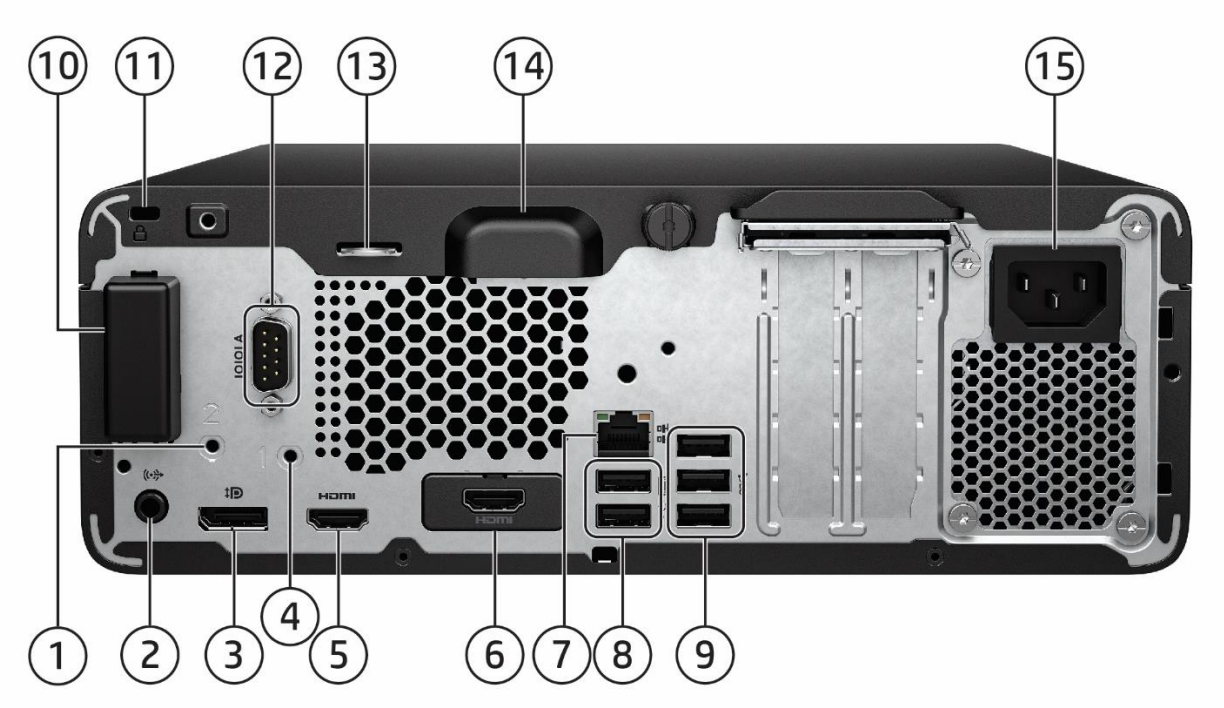

1. External antenna (optional)
2. Audio line-in/line-out connector
3. Dual-Mode DisplayPort™ 1.4a (DP++)
4. External antenna (option 1)
5. HDMI 1.4b
6. Flex Port, choice of:
   - DisplayPort™1.4a
   - HDMI 2.1
   - VGA
   - Serial
   - Dual Type-A SuperSpeed USB 5Gbps signaling rate
   - Type-C® SuperSpeed USB 10Gbps signaling rate with DisplayPort™ Alt mode
7. RJ45 network connector
8. (2) Type-A Hi-Speed USB 480Mbps signaling rate port (Supporting wake from S4/S5 with keyboard/mouse connected and enabled in BIOS)
9. (3) Type-A SuperSpeed USB 5Gbps signaling rate port
10. Internal WLAN antenna cover (optional)
11. Standard cable lock slot
12. Serial Port (Optional)
13. Padlock loop
14. Integrated accessory cable lock
15. Power cord connector

Not shown

Port	Bay
Optional PS/2 (2 ports) & serial port card[1] (connected with mainboard via flyer cable)	(1) 9.5mm internal optical drive bay (1) 3.5" internal storage drive bay
Optional parallel port[1]	
Optional 4 Serial Port PCIe Card[1] (1 to 4 serial port dongle)	

1. Each of the legacy options will occupy one rear slot.

Overview

HP Pro Tower 400/480 G9 PCI Desktop PC

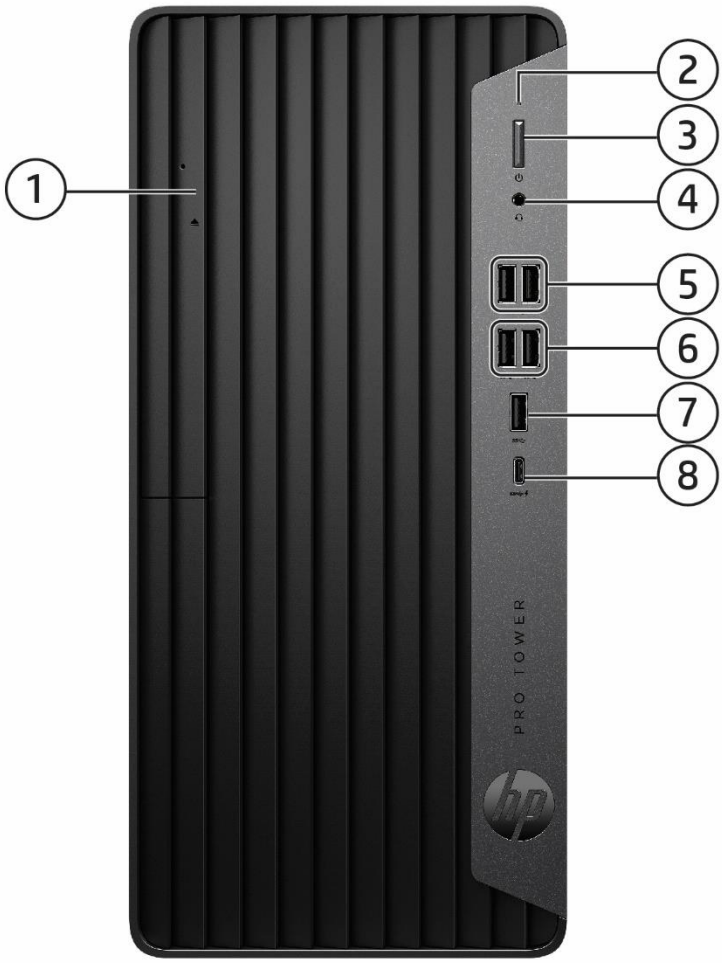

1. Slim optical drive (optional)
2. Hard drive activity light
3. Dual-state power button
4. Combo Audio Jack with CTIA and OMTP headset support
5. Front FlexIO Dual USB module (Option)
6. (2) Type-A SuperSpeed USB 10Gbps signaling rate port
7. (1) Type-A SuperSpeed USB 10Gbps signaling rate port
8. (1) Type-C® SuperSpeed USB 10Gbps signaling rate port

Not shown

PCI Express x16
(1) PCI Express x1
(1) PCI x1
(2) M.2 (1 as M.2 2230 socket for WLAN/Bluetooth®/storage[1] and 1 as M.2 2280 socket for storage)

1. Optional
2. SD card and front flex port can only select one at the same time

Overview

HP Pro Tower 400/480 G9 PCI Desktop PC



1. External WLAN antenna (select products only)
2. Audio line-in/line-out connector
3. Dual-Mode DisplayPort™ 1.4a (DP++)
4. HDMI 1.4b
5. Flex Port, choice of:
   - DisplayPort™1.4a
   - HDMI 2.1
   - VGA
   - Serial
   - Dual Type-A SuperSpeed USB 5Gbps signaling rate
   - Type-C® SuperSpeed USB 10Gbps signaling rate with DisplayPort™ Alt mode)
6. (2) Type-A Hi-Speed USB 480Mbps signaling rate (Supporting wake from S4/S5 with keyboard/mouse connected and enabled in BIOS)
7. (3) Type-A SuperSpeed USB 5Gbps signaling rate port
8. Power cord connector
9. Internal WLAN antenna cover (optional)
10. Internal WLAN antenna cover (optional)
11. RJ45 network connector
12. Serial port (optional)
13. Integrated keyboard/mouse wire hoop
14. Padlock loop
15. Standard cable lock slot

Not shown

Port

Optional PS/2 (2 ports) & serial port card (connected with mainboard via flyer cable) [1]

Optional parallel port[1]

Optional 4 Serial Port PCIe Card[1] (1 to 4 serial port dongle)

Bay

(1) 9.5mm internal optical drive bay

(2) 3.5" internal storage drive bay

1. Each of the legacy options will occupy one rear slot

HP ProOne 440 23.8 inch G9 All-in-One Desktop PC (Touch/Non-Touch)



1. Pull-up webcam (optional)
2. Combo Audio Jack with CTIA and OMTP headset support
3. Speakers (optional)
4. SD media card reader (optional)
5. On-screen display (OSD) buttons
6. Power button
7. Power activity light
8. Type-C® SuperSpeed USB 10Gbps signaling rate port (charge support up to 5V/3A)
9. Type-A SuperSpeed USB 10Gbps signaling rate port (charge support up to 5V/1.5A)

5MP webcam with Temporal Noise Reduction (optional)

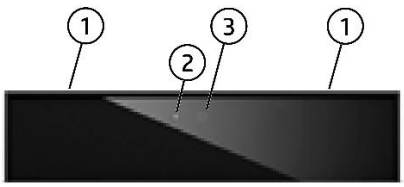

1. Dual microphones
2. Webcam light
3. 5MP webcam

5MP webcam with Temporal Noise Reduction + IR Sensor + Color Light Sensor (optional)

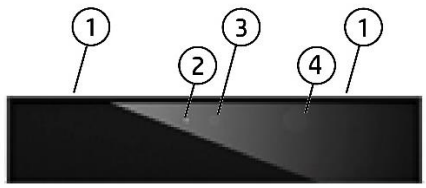

1. Dual microphones
2. Webcam light
3. IR/5MP/CLS webcam
4. IR light

HP ProOne 440 23.8 inch G9 All-in-One Desktop PC (Touch & Non-Touch)

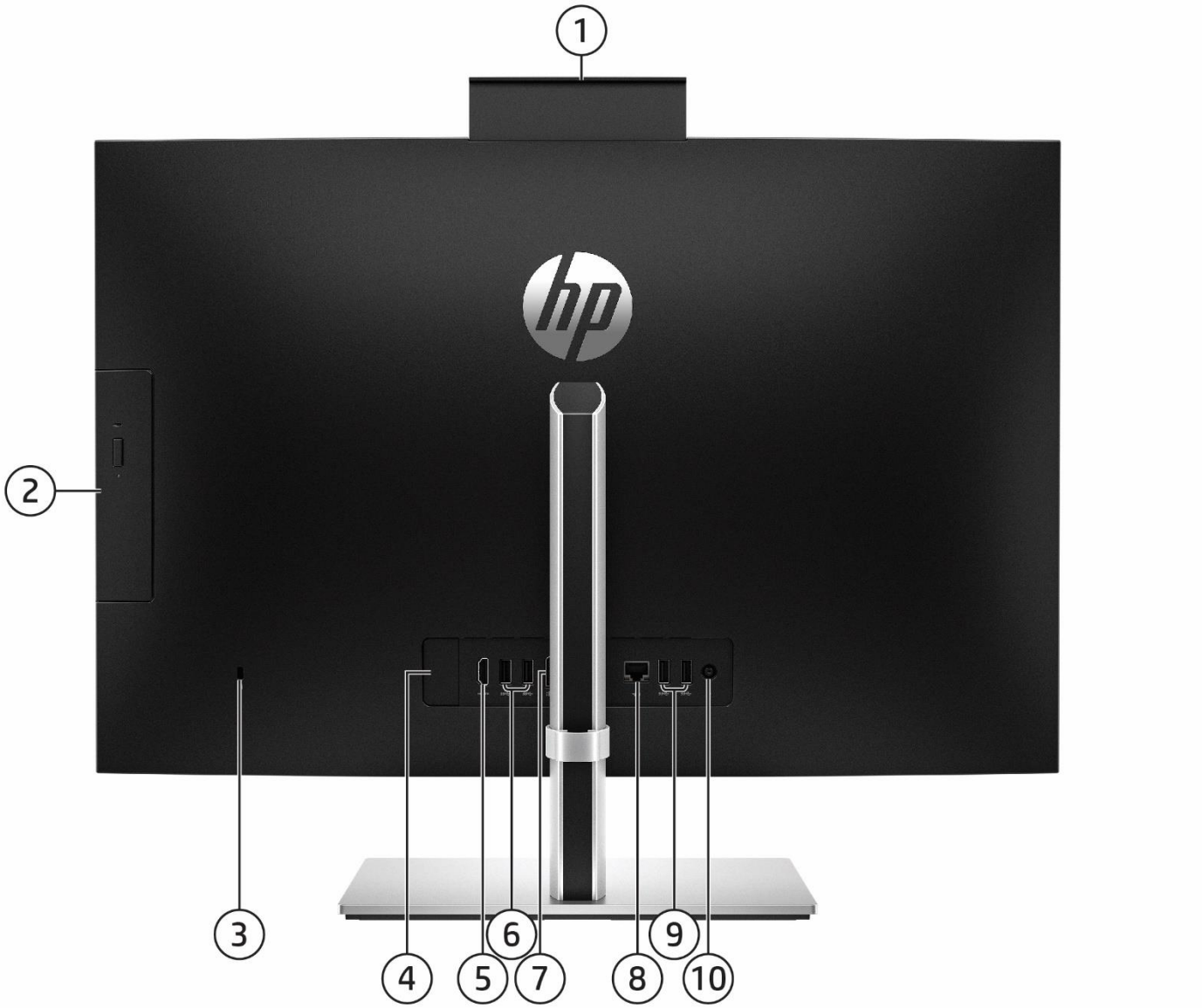

1. Pull-up webcam (optional)
2. Optical disc drive (optional)
3. Standard cable lock slot
4. Flex Port, choice of:
   - DisplayPort™ 1.4a
   - HDMI 2.1a
   - Serial Port
   - Type-C
5. HDMI-in 1.4b
6. (2) Type-A SuperSpeed USB 5Gbps signaling rate port (Supporting wake in from S4/S5 with keyboard/mouse connected and enabled BIOS)
7. Dual-Mode DisplayPort™ 1.4 (DP++)
8. RJ45 network connector
9. (2) Type-A SuperSpeed USB 10Gbps signaling rate port
10. Power connector

1. Availability may vary by country

AT A GLANCE

- Choice of four form factors: Tower, Small Form Factor, Mini Desktop and All-in-One.
- Latest commercial class Intel® Q670 chipsets supporting Intel® Core™ 12th, 13th and latest 14th Generation processors, featuring both integrated Intel® UHD Graphics and optional discrete graphics.
- Choice of Windows 11 Professional, Windows 11 Home, and FreeDOS.
- Dust filter available for the following platforms (Mini Desktop, PC SFF and Tower)
- Hardware feature highlights:
    - All Form Factors:
        - Up to 64 GB DDR5 Memory, Max Speed up to 4800 MT/s (and up to 5600 MT/s on TWR and SFF) with selected Intel® Core™ 14th Gen i5 & i7 Processors.
        - Integrated 10/100/1000 Ethernet Controller, with optional Wi-Fi 6E, Wi-Fi 6 (802.11ax) and Wi-Fi 5 (802.11ac) and Bluetooth®.
        - TUV Ultra Low Noice Certification on selected configuration.
    - TWR/SFF:
        - Multiply video outputs via 2 standard video ports, optional Flex IO and discrete graphics.
        - Rear Flex IO choices of Serial, VGA, DisplayPort, HDMI & USB Type-C® with DisplayPort™ Output.
        - Total 9 USB ports including 8 USB-A and 1 USB Type-C®
    - Mini
        - Configurable FlexPort which provides the following choices: HDMI 2.1, Serial, VGA, DisplayPort™ 1.4a, or USB Type-C® with DisplayPort™ 1.4 with Power Delivery and Dual USB Type-A.
        - 2nd FlexPort available for configuration with the following ports: Serial, Dual USB Type-A, and 2nd external antenna.
        - Single cable scenario support when configured with FlexPort USB Type-C® with DisplayPort™ 1.4 with Power Delivery via selected HP monitors.
        - Total 10 USB ports including 9 USB-A and 1 USB Type-C ® when configured with both FelxPorts in USB offering.
    - AiO:
        - Audio with HP Noise Cancellation Software, HP Dynamic Audio, and HP Sound Calibration.
        - Enhanced video conferencing experience with HP Auto Frame, HP Keystone Correction, Auto Camera Select, and Backlight/Lowlight Adjustments.
        - Multicamera software support of an additional webcam (optional) (sold separately).
        - HP Eye Ease TÜV Certified Integrated Low Blue Light panels.
        - Optional 23.8” FHD touchscreen with micro-edge bezel.
        - Optional 5MP pull-up camera with options for Temporal Noise Reduction, IR sensor, and Color Light sensor.
        - HDMI-in enabled Monitor Mode which disassociates panel from CPU for use as strictly display only.
        - Rear Flex IO choices of Serial, DisplayPort, HDMI & USB Type-C® with DisplayPort™ Output.
- Sustainability:
    - ENERGY STAR® certified. EPEAT® Climate+ registered where applicable.
    - High efficiency energy saving power supply and external power supply adapters.
    - Recycled metals, low halogen & ocean bound plastics used in materials.

- 100% sustainably sourced and recyclable package.

- TCO edge for AiO & TCO 9.0 for TWR/SFF/Mini.Software, Security & Manageability
  - Optional vPro Enterprise and Essentials
  - HP Wolf Security for Business includes HP Sure Click and HP Sure Sense
  - HP Tamper lock
  - HP Connect
  - HP BIOSphere
- Protected by HP Services, including limited warranty up to 1-1-1 (terms and conditions vary by country; certain restrictions and exclusions apply); Care Packs available with up to 5 years Next Business Day Onsite Hardware Support.
- Power consumption of Desktop Mini PC varies per configuration, for the best user experience, please connect PC power cord while using USB-C® cable via Super Speed USB Type-C® port in the rear side of the platform.
- Reduce clutter on Mini Desktop with single cable connection for power and video through USB Type-C® enabled displays with the optional USB- Type-C® port w/ DisplayPort Alt Mode and power intake via USB Type-C® Power Delivery up to 100W; reduce desktop footprint with the DM mounted behind a USB-C™ enabled display.

1. MIL-STD H testing is not intended to demonstrate fitness for U.S. Department of Defense contract requirements or for military use. Test results are not a guarantee of future performance under these test conditions. Accidental damage requires an optional HP Accidental Damage Protection Care Pack.

NOTE: See important legal disclosures for all listed specs in their respective features sections.

Standard Features and Configurable Components (availability may vary by country)

PRODUCT NAME

HP Pro Mini 400 G9 Desktop PC
HP Pro SFF 400 G9 Desktop PC
HP Pro Tower 400 G9 PCI Desktop PC
HP Pro Tower 480 G9 PCI Desktop PC
HP ProOne 440 23.8 inch G9 All-in-One Desktop PC

OPERATING SYSTEM

Preinstalled

Windows 11 Pro[1]
Windows 11 Pro Education[1]
Windows 11 Home - HP recommends Windows 11 Pro for business[1]
Windows 11 Home Single Language - HP recommends Windows 11 Pro for business[1]
Windows 11 Pro (Windows 11 Enterprise or Windows 10 Enterprise available with a Volume Licensing Agreement)[1]
FreeDOS

1. Not all features are available in all editions or versions of Windows. Systems may require upgraded and/or separately purchased hardware, drivers, software or BIOS update to take full advantage of Windows functionality. Windows is automatically updated and enabled. High speed internet and Microsoft account required. ISP fees apply and additional requirements may apply over time for updates.See http://www.windows.com.

CHIPSET

	Mini	SFF	TWR	AiO
Intel® Q670	X	X	X	X

Standard Features and Configurable Components (availability may vary by country)

PROCESSORS

Intel® 12th Generation Core™ Processors	Mini	SFF	TWR	AiO
Intel® Core™ i7-12700 Processor[1] 65W 2.1 GHz base frequency Up to 4.9 GHz max. turbo frequency with Intel® Turbo Boost Technology[2] 25 MB cache, 12 cores, 20 threads Intel® UHD Graphics 770 Supports Intel® vPro® Technology and Intel® Stable Image Platform Program (SIPP)[3]		X	X	X
Intel® Core™ i7-12700T Processor[1] 35W 1.4 GHz base frequency Up to 4.7 GHz max. turbo frequency with Intel® Turbo Boost Technology 3.0[2] 25 MB cache, 12 cores, 20 threads Intel® UHD Graphics 770 Supports Intel® vPro® Technology and Intel® Stable Image Platform Program (SIPP)[3]	X			X
Intel® Core™ i5-12600 Processor[1] 65W 3.3 GHz base frequency Up to 4.8 GHz max. turbo frequency with Intel® Turbo Boost Technology[2] 18 MB cache, 6 cores, 12 threads Intel® UHD Graphics 770 Supports Intel® vPro® Technology and Intel® Stable Image Platform Program (SIPP)[3]		X	X	X
Intel® Core™ i5-12600T Processor[1] 35W 2.1 GHz base frequency Up to 4.6 GHz max. turbo frequency with Single P-core turbo Technology 18 MB cache, 6 cores, 12 threads Intel® UHD Graphics 770 Supports Intel® vPro® Technology and Intel® Stable Image Platform Program (SIPP)[3]	X			X

Standard Features and Configurable Components (availability may vary by country)

	Mini	SFF	TWR	AiO
Intel® Core™ i5-12500 Processor[1] 65W 3.0 GHz base frequency Up to 4.6 GHz max. turbo frequency with Intel® Turbo Boost Technology[2] 18 MB cache, 6 cores, 12 threads Intel® UHD Graphics 770 Supports Intel® vPro® Technology and Intel® Stable Image Platform Program (SIPP)[3]		X	X	X
Intel® Core™ i5-12500T Processor[1] 35W 2.0 GHz base frequency Up to 4.4 GHz max. turbo frequency with Single P-core Turbo Technology 18 MB cache, 6 cores, 12 threads Intel® UHD Graphics 770 Supports Intel® vPro® Technology and Intel® Stable Image Platform Program (SIPP)[3]	X			X
Intel® Core™ i5-12400 Processor[1] 65W 2.5 GHz base frequency Up to 4.4 GHz max. turbo frequency with Intel® Turbo Boost Technology[2] 18 MB cache, 6 cores, 12 threads Intel® UHD Graphics 730		X	X	X
Intel® Core™ i5-12400T Processor[1] 35W 1.8 GHz base frequency Up to 4.2 GHz max. turbo frequency with Single P-core Turbo Technology 18 MB cache, 6 cores, 12 threads Intel® UHD Graphics 730	X			X
Intel® Core™ i3-12300 Processor1 60W 3.5 GHz base frequency Up to 4.4 GHz max. turbo frequency with Single P-Core technology 12 MB cache, 4 cores, 8 threads Intel® UHD Graphics 730		X	X	X

Standard Features and Configurable Components (availability may vary by country)

	Mini	SFF	TWR	AiO
Intel® Core™ i3-12300T Processor[1] 35W 2.3 GHz base frequency Up to 4.2 GHz max. turbo frequency with Single P-Core technology 12 MB cache, 4 cores, 8 threads Intel® UHD Graphics 730	X			X
Intel® Core™ i3-12100 Processor[1] 60W 3.3 GHz base frequency Up to 4.3 GHz max. turbo frequency with Intel® Turbo Boost Technology[2] 12 MB cache, 4 cores, 8 threads Intel® UHD Graphics 730		X	X	X
Intel® Core™ i3-12100T Processor[1] 35W 2.2 GHz base frequency Up to 4.1 GHz max. turbo frequency with Single P-core Technology12 MB cache, 4 cores, 8 threads Intel® UHD Graphics 730	X			X

Standard Features and Configurable Components (availability may vary by country)

Intel® Pentium® Processors	Mini	SFF	TWR	AiO
Intel® Pentium® Gold G-7400 Processor[1] 46W 3.7 GHz base frequency 6 MB cache, 2 cores, 4 threads Intel® UHD Graphics 710		X	X	X
Intel® Pentium® Gold G-7400T Processor[1] 35W 3.1 GHz base frequency 6 MB cache, 2 cores, 4 threads Intel® UHD Graphics 710	X			X
Intel® Celeron® 6900 Processor[1] 46W 3.4 GHz base frequency 4 MB cache, 2 cores, 2 threads Intel® UHD Graphics 710		X	X	X
Intel® Celeron® 6900T Processor[1] 35W 2.8 GHz base frequency 4 MB cache, 2 cores, 2 threads Intel® UHD Graphics 710	X			X

Standard Features and Configurable Components (availability may vary by country)

Intel® 13th Generation Core™ Processors	Mini	SFF	TWR	AiO
Intel® Core™ i7-13700 processor with Intel® UHD Graphics 770 (P-core Max turbo frequency up to 5.1 GHz, up to 5.2 GHz with Intel® Turbo Boost Technology[1], 30 MB L3 cache, 16 cores) 65W[2] Supports Intel® vPro® Technology[3]		X	X	X
Intel® Core™ i7-13700T Processor with Intel® UHD Graphics 770 (P-core Max turbo frequency up to 4.8 GHz, up to 4.9 GHz with Intel® Turbo Boost Technology[1],30MB cache, 16 cores) 35W[2]. Supports Intel® vPro® Technology[3]	X			X
Intel® Core™ i5-13600T processor with Intel® UHD Graphics 770 (P-core Max turbo frequency up to 4.8 GHz, 24 MB cache, 14 cores) 35W. Supports Intel® vPro® Technology	X			X
Intel® Core™ i5-13500 processor with Intel® UHD Graphics 770 (P-core Max turbo frequency up to 4.8 GHz, 24 MB cache, 14 cores) 65W[2]. Supports Intel® vPro® Technology[3]		X	X	X
Intel® Core™ i5-13500T processor with Intel® UHD Graphics 770 (P-core Max turbo frequency up to 4.6 GHz, 20 MB cache, 14 cores) 35W[2]. Supports Intel® vPro® Technology[3]	X			X
Intel® Core™ i5-13400 processor with Intel® UHD Graphics 730 (P-core Max turbo frequency up to 4.6 GHz, 20 MB cache, 10 cores) 65W[2].				X
Intel® Core™ i3-13100 processor with Intel® UHD Graphics 730 (P-core Max turbo frequency up to 4.5 GHz, 12 MB cache, 4 cores) 65W[2].		X	X	X
Intel® Core™ i3-13100T processor with Intel® UHD Graphics 730 (P-core Max turbo frequency up to 4.2 GHz, 12 MB cache, 4 cores) 35W[2].	X			X

1. Multi-core is designed to improve performance of certain software products. Not all customers or software applications will necessarily benefit from use of this technology. Performance and clock frequency will vary depending on application workload and your hardware and software configurations. Intel's numbering, branding and/or naming is not a measurement of higher performance.
2. Intel® Turbo Boost technology requires a PC with a processor with Intel® Turbo Boost capability. Intel® Turbo Boost performance varies depending on hardware, software and overall system configuration. See www.intel.com/technology/turboboost for more information.
3. Intel vPro® requires Windows 10 Pro 64 bit or higher, a vPro supported processor, vPro enabled chipset, vPro enabled wired LAN and/or Wi-Fi 6E WLAN and TPM 2.0. Some functionality requires additional 3rd party software in order to run. Features of vPro® Essentials and Enterprise vary. See http://intel.com/vpro.

Standard Features and Configurable Components (availability may vary by country)

Intel® 14th Generation Core™ Processors	Mini	SFF	TWR	AiO
Intel® Core™ i7-14700 with Intel UHD Graphics 770 (1.5 GHz E-core base frequency, 2.1 GHz P-core base frequency, up to 4.2 GHz E-core Max Turbo frequency, up to 5.3 GHz P-core Max Turbo frequency, 33 MB L3 cache, 8 P-cores and 12 E-cores, 28 threads), supports Intel® vPro® Technology		X	X	X
Intel® Core™ i7-14700T with Intel UHD Graphics 770 (0.9 GHz E-core base frequency, 1.3 GHz P-core base frequency, up to 3.7 GHz E-core Max Turbo frequency, up to 5.0 GHz P-core Max Turbo frequency, 33 MB L3 cache, 8 P-cores and 12 E-cores, 28 threads), supports Intel® vPro® Technology	X			X
Intel® Core™ i5-14500 with Intel UHD Graphics 770 (1.9 GHz E-core base frequency, 2.6 GHz P-core base frequency, up to 3.7 GHz E-core Max Turbo frequency, up to 5.0 GHz P-core Max Turbo frequency, 24 MB L3 cache, 6 P-cores and 8 E-cores, 20 threads), supports Intel® vPro® Technology		X	X	X
Intel® Core™ i5-14500T with Intel UHD Graphics 770 (1.2 GHz E-core base frequency, 1.7 GHz P-core base frequency, up to 3.4 GHz E-core Max Turbo frequency, up to 4.8 GHz P-core Max Turbo frequency, 24 MB L3 cache, 6 P-cores and 8 E-cores, 20 threads), supports Intel® vPro® Technology	X			X
Intel® Core™ i3-14100 with Intel UHD Graphics 730 (3.5 GHz P-core base frequency, up to 4.7 GHz P-core Max Turbo frequency, 12 MB L3 cache, 4 P-cores, 8 threads)		X	X	X
Intel® Core™ i3-14100T with Intel UHD Graphics 730 (2.7 GHz P-core base frequency, up to 4.4 GHz P-core Max Turbo frequency, 12 MB L3 cache, 4 P-cores, 8 threads)	X			X
Intel® Core™ 300 with Intel UHD Graphics 710 (3.9 GHz P-core base frequency, 6 MB L3 cache, 2 P-cores, 4 threads)		X	X	X
Intel® Core™ 300T with Intel UHD Graphics 710 (3.4 GHz P-core base frequency, 6 MB L3 cache, 2 P-cores, 4 threads)	X			X

Standard Features and Configurable Components (availability may vary by country)

GRAPHICS

Integrated Graphics	Mini	SFF	TWR	AiO
Intel® UHD Graphics 770 (integrated on 12th, 13th & 14th gen Core i7, Core i5-1x500 and Core i5-1x500T)	X	X	X	X
Intel® UHD Graphics 730 (integrated on 12th, 13th & 14th gen Core i3/i5-1x400, i5-1x400T)	X	X	X	X
Intel® UHD Graphics 710 (integrated on Pentium® Gold, Celeron® and 300 series)	X	X	X	X

Optional Discrete Graphics Solutions	Mini	SFF	TWR	AiO
NVIDIA® GeForce® RTX 3050 8GB GDDR6 Graphics card			x	
NVIDIA® T400 4GB Graphics Card		X	X	
Intel® Arc A380 6GB GDDR6 Graphics card			X	
AMD Radeon™ 6300M with 2 GB GDDR6 Graphics				X
AMD Radeon™ RX 6300 2GB GDDR6 Graphics card		X	X	

1. Only available with the 12th Generation processors.

Adapters and Cables	Mini	SFF	TWR	AiO
HP DisplayPort™ Cable	X	X	X	X
HP DisplayPort™ to DVI-D Adapter	X	X	X	X
HP DisplayPort™ to HDMI True 4K Adapter	X	X	X	X
HP DisplayPort™ to VGA Adapter	X	X	X	X
HP USB to Serial Port Adapter	X	X	X	X

STORAGE

NOTE: Starting from November 1st, 2023, all shipments will require Windows to be installed when selecting a SSD.
HDD can only be configured as additional data drives and not as the boot drive.

3.5 inch SATA Hard Disk Drives (HDD)	Mini	SFF	TWR	AiO
1TB* 7200RPM SATA HDD		X	X	
2TB* 7200RPM SATA HDD		X	X	

NOTE: RAID is supported when 2 SATA hard drive are configured.

2.5 inch SATA Hard Disk Drives (HDD)	Mini	SFF	TWR	AiO
1TB* 7200RPM SATA HDD	X			X

Standard Features and Configurable Components (availability may vary by country)

M.2 PCIe NMVe Solid State Drives (SSD)	Mini	SFF	TWR	AiO
256GB M.2 2280 PCIe NVMe SSD	X	X	X	X
512GB M.2 2280 PCIe NVMe SSD	X	X	X	X
1TB M.2 2280 PCIe NVMe SSD	X	X	X	X
256GB M.2 2280 PCIe NVMe Three Layer Cell SSD[1]	X	X	X	X
512GB M.2 2280 PCIe NVMe Three Layer Cell SSD	X	X	X	X
1TB M.2 2280 PCIe NVMe Three Layer Cell SSD	X	X	X	X
2TB M.2 2280 PCIe NVMe Three Layer Cell SSD	X	X	X	X
256GB M.2 2280 PCIe NVMe Self Encrypted OPAL2 Three Layer Cell SSD[1]	X	X	X	X
512GB M.2 2280 PCIe NVMe Self Encrypted OPAL2 Three Layer Cell SSD	X	X	X	X
256GB M.2 2280 PCIe OPAL2 NVMe SSD	X	X	X	X

NOTE*: For hard drives and solid state drives, GB = 1 billion bytes. TB = 1 trillion bytes. Actual formatted capacity is less. Up to 36 GB (for Windows) of system disk is reserved for the system recovery software.
NOTE:** Storage DriveLock does not work with Self Encrypting or Optane based storage.
1. Only available with the 12th Generation processors.

Optical Disc Drives	Mini	SFF	TWR	AiO
HP 9.5mm Slim DVD-ROM Drive[1]		X	X	X
HP 9.5mm Slim DVD Writer Drive		X	X	X

1. HD-DVD disks cannot be played on this drive. No support for DVD-RAM. Actual speeds may vary. Don't copy copyright-protected materials. Double Layer discs can store more data than single layer discs. Discs burned with this drive may not be compatible with many existing single-layer DVD drives and players.

Media Card Reader	Mini	SFF	TWR	AiO
SD 4.0 with 5-in-1 Interface (Supports SD, SDXC, SDHC, UHS-I, UHS-II)		X	X	
SD 3.0 with 4-in-1 Interface (Supports SD, SDXC, SDHC, UHS-I)				X

MEMORY

	Mini	SFF	TWR	AiO
DDR4-3200 (Transfer rates up to 3200 MT/s), Max 64 GB, 2 SO-DIMM	X			X
DDR4-3200 (Transfer rates up to 3200 MT/s), Max 64 GB, 2 U-DIMM		X	X	
DDR5-4800 (Transfer rates up to 4800 MT/s), Max 64 GB, 2 U-DIMM		X	X	
DDR5-4800 (Transfer rates up to 4800 MT/s) Max 64 GB, 2 SO-DIMM	X			X
DDR5-5600 (Transfer rates up to 5600 MT/s), Max 64 GB, 2 U-DIMM		X	X	

Standard Features and Configurable Components (availability may vary by country)

Memory Configuration	Mini	SFF	TWR	AiO
4GB (4GB x 1)	X	X	X	X
8GB (4GB x 2)	X	X	X	X
8GB (8GB x 1)	X	X	X	X
16GB (8GB x 2)	X	X	X	X
16GB (16GB x 1)	X	X	X	X
32GB (16GB x 2)	X	X	X	X
32GB (32GB x 1)	X	X	X	X
64GB (32GB x 2)	X	X	X	X

NOTE: For systems configured with more than 3GB of memory and a 32-bit operating system, all memory may not be available due to system resource requirements. Addressing memory above 4GB requires a 64-bit operating system.
NOTE: Memory modules support data transfer rates up to 3200 MT/s respectively depending on memory module used; actual data rate is determined by the system's configured processor. See processor specifications for supported memory data rate.
NOTE: All memory slots are customer accessible / upgradeable.
NOTE: Memory speed 3200 MT/s can be achieved via two UDIMMs per channel (2DPC) when populated with the same part number.
NOTE: Memory modules support data transfer rates up to 5600/MTs requires selected i5, i7 or i9 CPUs. Memory configuration without selected CPUs support data transfer rates up to 4800 MT/s.

Standard Features and Configurable Components (availability may vary by country)

NETWORKING/COMMUNICATIONS

Ethernet (RJ-45)	Mini	SFF	TWR	AiO
Intel® I219-LM 1 Gigabit Network Connection LOM (vPro®)	X	X	X	X
Network Adapter Intel FoxPond1 I225-T1 2.5GbE		X	X	

Wireless				
Intel® Wi-Fi 6E[2] AX211 + Bluetooth® 5.3 wireless card (802.11AX 2x2 vPro®, supporting gigabit data rate[3])[4,5]	X	X	X	X
Intel® Wi-Fi 6E[2] AX211 + Bluetooth® 5.3 wireless card (802.11AX 2x2 non-vPro®, supporting gigabit data rate[3])[4,5]	X	X	X	X
Realtek Wi-Fi 6[2] RTL8852BE 802.11ax 2x2 with Bluetooth® 5.3 wireless card	X	X	X	X
Realtek RTL8821CE 802.11ac[5] 1x1 with Bluetooth® 4.2 wireless card	X	X	X	X

1. Only available with Intel Core 14th Gen processors.
2. Wi-Fi 6E requires a Wi-Fi 6E router, sold separately, to function in the 6GHz band. Availability of public wireless access points limited. Wi-Fi 6E is backwards compatible with prior 802.11 specs. And available in countries where Wi-Fi 6E is supported. Wi-Fi 6E is designed to support gigabit data rate when transferring files between two devices connected to the same router. Requires a wireless router, sold separately, that supports 80MHz and higher channels.
3. Wi-Fi 6 is designed to support gigabit data rate when transferring files between two devices connected to the same router. Requires a wireless router, sold separately, that supports 80MHz and higher channels.
4.The HP 400 G9 TWR/SFF requires Intel ® Core ™ processor with DDR5 memory modules to support Wi-Fi 6E and requires a Wi-Fi 6E router, sold separately, to function in the 6GHz band. Availability of public wireless access points limited. Wi-Fi 6E is backwards compatible with prior 802.11 specs. Available in countries where Wi-Fi 6E is supported. Wi-Fi 6E is backwards compatible with prior 802.11 specs. And available in countries where Wi-Fi 6E is supported. For HP 400 G9 TWR/SFF without Intel ® Core ™ processors and DDR5 memory modules, the product does not support Wi-Fi 6E standard and does not operate under 6GHz band. The products are compatible with 6GHz and other routers, sold separately, which have capability to operate in 2.4GHz and 5GHz, in compliance with Wi-Fi 6 and prior 802.11 specs. The actual throughput depends on network condition and router configuration. Internet service required and public wireless access points are limited.
5. Wireless access point and internet service required and sold separately. Availability of public wireless access points limited. Wi-Fi 5 (802.11 ac) is backwards compatible with prior 802.11 specs.
NOTE: Usage of the 6GHz band relies on Windows 11 Operating System support.

KEYBOARDS AND POINTING DEVICES

Keyboards	Mini	SFF	TWR	AiO
HP Business Slim PS/2 Wired Keyboard		X	X	
HP Wired Desktop 320K Keyboard	X	X	X	X
HP USB Business Slim Wired SmartCard CCID Keyboard	X	X	X	X
HP 125 Wired Keyboard	X	X	X	X
HP 125 Antimicrobial Wired Keyboard (China Only)	X	X	X	X

Keyboard & Mouse Combo				
HP 655 Wireless Keyboard and Mouse Combo	X	X	X	X

Standard Features and Configurable Components (availability may vary by country)

Mouse

HP PS/2 Mouse		X	X	
HP Wired Desktop 320M Mouse	X	X	X	X
HP 125 Wired Mouse	X	X	X	X
HP 125 Wired Antimicrobial Mouse (China Only)	X	X	X	X
HP 128 Wired Laser Mouse	X	X	X	X

NOTE: Availability may vary by country

SECURITY

	Mini	SFF	TWR	AiO
TPM 2.0 (FW: 15.21) endpoint security controller (Infineon SLB9672/Nuvoton NPCT760HABYX) Common Criteria EAL4+ Certified. FIPS 140-2 Level 2 Certified.	X	X	X	X
Intrusion Sensor (Optional)		X	X	
Intrusion Sensor (integrated in the system board, can be enabled/disabled through BIOS)	X			X
Support for chassis cable lock devices	X (10 mm barrel or smaller)	X	X	X
Support for chassis padlocks devices	X	X	X	
Support for table lock				X
SATA port disablement (via BIOS)	X	X	X	
Serial, USB enable/disable (via BIOS)	X	X	X	X
Intel® Identify Protection Technology (IPT)[1]	X	X	X	X
Removable media write/boot control	X	X	X	X
Power-on password (via BIOS)	X	X	X	X
Setup password (via BIOS)	X	X	X	X

1. Models configured with Intel® Core™ processors have the ability to utilize advanced security protection for online transactions. IPT, used in conjunction with participating web sites, provides double identity authentication by adding a hardware component in addition to the usual user name and password. IPT is initialized through an HP Client Security module

Standard Features and Configurable Components (availability may vary by country)

PORTS

Internal Slots and Ports	Mini	SFF	TWR	AiO
M.2 PCIe	(1) M.2 PCIe x1 2230 (for WLAN/BT) (1) M.2 PCIe x4 2280 (for storage)	(1) M.2 PCIe x1 2230 (for WLAN/BT[1]) (1) M.2 PCIe x4 2280 (for storage)	(1) M.2 PCIe x1 2230 (for WLAN/BT/storage[1]) (1) M.2 PCIe x4 2280 (for storage)	(1) M.2 PCIe x1 2230 (for WLAN) (1) M.2 PCIe x4 2280 (for storage) (1) M.2 PCIe x3 2280 (for storage)
PCI Express v4.0 x1		1	1	
PCI Express v4.0 x16		1	1	
PCI x1			1	
SATA port		2	3	
Integrated SATA storage connector	1			1

1. Optional.

NOTE: For Desktop Mini with M.2 Storage config, there will be no SATA drive bracket. If you plan to use or upgrade the storage with any 2.5" SATA drive, please select a DM SATA Drive Bracket (available as both factory configured and after market option).

NOTE: PCI slots for TWR are full height and SFF are low profile.

Standard Features and Configurable Components (availability may vary by country)

Bays	Mini	SFF	TWR	AiO
9.5mm Slim Optical Disc Drive (ODD)		1	1	1[1]
SD Card Reader[1] (optional)		1	1	1
2.5" Internal Storage Drive	1			1
3.5" Internal Storage Drive		1	2	

1. Must be configured at time of purchase
2. Need to be configured at the time of purchase, either SATA or the ODD can only be selected one at the same time.

Standard User Accessible Ports	Mini	SFF	TWR	AiO
Type-A Hi-Speed USB 480Mbps signaling rate port		2 (rear)	2 (rear)	
Type-A SuperSpeed USB 5Gbps signaling rate port	2 (rear)	3 (rear)	3 (rear)	2 (rear)
Type-A SuperSpeed USB 10Gbps signaling rate port	2 (front) 1 (rear)	3 (front)	3 (front)	2 (rear) 1 (side)
Type-C® SuperSpeed USB 10Gbps signaling rate port		1 (front)	1 (front)	1 (side)
Type-C® SuperSpeed USB 20Gbps signaling rate port	1 (front)			
Video	2 DisplayPort™ 1.4a (rear) 1 HDMI 2.1a (rear)	1 DisplayPort™ 1.4a (rear) 1 HDMI 1.4b (rear)	1 DisplayPort™ 1.4a (rear) 1 HDMI 1.4b (rear)	1 DisplayPort™1.4a 1 HDMI-in (Rear) 1.4b
Audio	1 Combo Audio Jack with CTIA and headset support (front)	1 Combo Audio Jack with CTIA & OMTP and headset support (front) 1 Audio-Line-in/Line out (rear)	1 Combo Audio Jack with CTIA & OMTP and headset support (front) 1 Audio-Line-in/Line out (rear)	1 Combo Audio Jack with CTIA and OMTP headset support (side)
Network Interface	1 RJ45 (rear)	1 RJ45 (rear)	1 RJ45 (rear)	1 RJ45 (rear)

1. Upgradeable to SuperSpeed USB 10Gbps signaling rate port if configured with additional digital video port via Flex Port 1 and/or Intel® vPro®

Standard Features and Configurable Components (availability may vary by country)

Rear Configurable Non-PCIe/PCI Slot User Accessible Ports

Flexible Port 1, choice of one of the following:	Mini	SFF	TWR	AiO
Type-A USB		2 Type-A SuperSpeed USB 5Gbps signaling rate port	2 Type-A SuperSpeed USB 5Gbps signaling rate port (rear)	
Type-C® USB	1 SuperSpeed USB 10Gbps signaling rate port w/ DisplayPort™ Alt Mode and power intake via USB Type-C® Power Delivery up to 100W	1 SuperSpeed USB 10Gbps signaling rate port w/ DisplayPort™ Alt Mode	1 SuperSpeed USB 10Gbps signaling rate port w/ DisplayPort™ Alt Mode	1 SuperSpeed USB 10Gbps signaling rate port w/ DisplayPort™ Alt Mode
Video	1 DisplayPort™ 1.4a or HDMI 2.1a or VGA	1 DisplayPort™ 1.4a or HDMI 2.1a or VGA	1 DisplayPort™ 1.4a or HDMI 2.1a or VGA	1 DisplayPort™ 1.4a or HDMI 2.1a or USB-C
Serial (RS-232)	1[1]	1	1	1

1. Sold separately or as an optional feature

(1) Flexible Port 2, choice of one of the following:	Mini	SFF	TWR	AiO
Type-A USB	2 Hi-Speed USB 480Mbps signaling rate port[1]		1 Type-A SuperSpeed USB 5Gbps signaling rate port[2] (front)	
Serial (RS-232)	1[1]			
2nd External antenna	1[1]			

1. Must be configured at time of purchase
2. Front flex IO – Dual USB port and SD card reader can only select one at the same time.

Standard Features and Configurable Components (availability may vary by country)

USB SPECIFICATION AND MARKETING NAME MAPPING TABLE

Marketing Name	Technical Terminology
Hi-Speed USB 480Mbps signaling rate	USB 2.0
SuperSpeed USB 5Gbps signaling rate	USB 3.2 Gen 1
SuperSpeed USB 10Gbps signaling rate	USB 3.2 Gen 2
SuperSpeed USB 20Gbps signaling rate	USB 3.2 Gen 2x2

Standard Features and Configurable Components (availability may vary by country)

SOFTWARE COMPONENTS AND APPLICATIONS WITH WINDOWS

Software
HP Easy Clean[1]
HP PC Hardware Diagnostics UEFI
HP Desktop Support Utilities
HP Privacy Settings
HP Setup Integrated OOBE
HP Support Assistant[2]
myHP with Multicamera support (AIO&Mini)[3]
HP Notifications
HP Connection Optimizer
HP Smart Support[4]
HP Services Scan[5]
Microsoft Office[6]
Miro[7]

Manageability Features
HP Connect[8]
HP Image Assistant (download)
HP Manageability Integration Kit (download) (Win 10 Only)[9]
HP Client Management Script Library (download)
HP Patch Assistant (download)[10]
HP Driver Packs (download)
HP Cloud Recovery[11]
HP Client Catalog (download)

Security Features
HP Wolf Security for Business[12] includes HP Sure Click[13] and HP Sure Sense[14]
HP Sure Start[15]
HP Tamper Lock[16]
HP Sure Admin[17]
Secured-Core PC (AIO&Mini)[18]
Windows Hello Enhanced Sign-in Security (ESS) (AIO)[19]

BIOS
HP BIOSphere[20]
HP Secure Erase[21]
HP DriveLock & Automatic DriveLock
BIOS Update via Network
Absolute Persistence Module[22]
Power-On Authentication[23]
Microsoft 3rd Party UEFI CA Enable
UEFI Self Certification Level: 2.7B

1. HP Easy Clean requires Windows 10 RS3 and will disable the keyboard, touchscreen, and clickpad only. Ports are not disabled. See user guide for cleaning instructions.
2. HP Support Assistant is available on Windows. For more information, please visit http://www.support.hp.com/help/hp-support-assistant.
3. MyHP with Multicamera support for Mini Desktop PC will only available on 13th processor and beyond.
HP Smart Support automatically collects the telemetry necessary upon initial boot of the product to deliver device-level configuration data and health insights and is available preinstalled on select products, thru HP Factory Configuration Services; or it can be downloaded. For more information about how to enable HP Smart Support or for download, please visit http://www.hp.com/smart-support.
5. HP Services Scan automatically collects the telemetry necessary upon initial boot of the product to deliver device-level configuration data and health insights and is available preinstalled on select products, thru HP Factory Configuration Services; or it can be downloaded. For more information about how to enable HP Smart Support or for download, please visit http://www.hp.com/smart-support.
6. Microsoft 365 sold separately and requires Internet access for activation.

Standard Features and Configurable Components (availability may vary by country)

7. HP customers qualify for a 90 day trail of Miro, this offer ends September 2025. Complete terms and conditions are provided by Miro when accepting the offer.
8. HP Connect for Microsoft Endpoint Manager is available from the Azure Market Place for HP Pro, Elite, Z and Point-of-Sale PCs managed with Microsoft Endpoint Manager. Subscription to Microsoft Endpoint Manager required and sold separately. Network connection required.
9. HP Manageability Integration Kit can be downloaded from http://www.hp.com/go/clientmanagement.
10. HP Patch Assistant available on select HP PCs with the HP Manageability Kit that are managed through Microsoft System Center Configuration Manager. HP Manageability Integration Kit can be downloaded from http://www8.hp.com/us/en/ads/clientmanagement/overview.html.
11. HP Cloud Recovery is available for Z by HP, HP Elite and Pro desktops and laptops PCs with Intel® or AMD processors and requires an open, wired network connection. Note: You must back up important files, data, photos, videos, etc. before use to avoid loss of data. Detail, please refer to: https://support.hp.com/us-en/document/c05115630.
12. HP Wolf Security for Business requires Windows 10 or 11 Pro or higher, includes various HP security features and is available on HP Pro, Elite, RPOS and Workstation products. See product details for included security features.
13. HP Sure Click requires Windows 10 Pro or higher or Enterprise. See https://bit.ly/2PrLT6A_SureClick for complete details.
14. HP Sure Sense is available on select HP PCs with Windows 10 Pro, Windows 10 Enterprise, Windows 11 Pro, or Windows 11 Enterprise OS.
15. HP Sure Start is available on select HP PCs and requires Windows 10 and higher
16. HP Tamper Lock can be Enabled/disabled by customers or IT administrator with administrator authority.
17. HP Sure Admin requires HP G8 or newer platforms, Windows 10 or higher, HP BIOS, HP Manageability Kit or KMS Service from http://www.hp.com/go/clientmanagement and HP Sure Admin Local Access Authenticator smartphone app from the Android or Apple store
18. Secured-Core PC Enable requires an Intel® vPro®, AMD Ryzen™ Pro processor or Qualcomm® processor with SD850 or higher and requires 8 GB or more system memory. Secured-core PC is enabled from the factory.
19. Requires a Windows Hello webcam or fingerprint reader.
20. HP BIOSphere features may vary depending on the platform and configuration.
21. HP Secure Erase for the methods outlined in the National Institute of Standards and Technology Special Publication 800-88 "Clear" sanitation method. HP Secure Erase does not support platforms with Intel® Optane™.
22. Absolute firmware module is shipped turned off and can only be activated with the purchase a license subscription and full activation of the software agent. License subscriptions can be purchased for terms ranging multiple years. Service is limited, check with Absolute for availability outside the U.S. Certain conditions apply. For full details visit: http://www.absolute.com/about/legal/agreements/absolute.
23. Ensures that only authorized users can start up the PC or access the BIOS by requiring user authentication using a password prior to system start-up.

Standard Features and Configurable Components (availability may vary by country)

UNIT ENVIRONMENT AND OPERATING CONDITIONS

General Unit Operating Guidelines

- Keep the computer away from excessive moisture, direct moisture and the extremes of heat and cold, to ensure that unit is operated within the specified operating range.
- Leave a 10.2 cm (4 in) clearance on all vented sides of the computer to permit the required airflow.
- Never restrict airflow into the computer by blocking any vents or air intakes.
- Do not stack computers on top of each other or place computers so near each other that they are subject to each other's re-circulated or preheated air.
- Occasionally clean the air vents on the front, back, and any other vented side of the computer. Lint, dust and other foreign matter can block the vents and limit the airflow.
- If the computer is to be operated within a separate enclosure, intake and exhaust ventilation must be provided on the enclosure, and the same operating guidelines listed above will still apply.

Temperature Range	Operating: 5° to 35° C[1] Non-Operating for AiO: -20° to 60° C[1] Non-Operating for MT/SFF/DM: -30° to 60° C[1]
Relative Humidity	Operating: 10% to 90% (non-condensing at ambient) Non-operating: 5% to 95% (non-condensing at ambient)
Maximum Altitude (unpressurized)	Operating: 5000m Non-operating: 50000ft (15240 m)

1. Operating temperature is de-rated 1.0 deg C per 300 m (1000 ft) to 3000 m (10,000 ft) above sea level, no direct sustained sunlight. Maximum rate of change is 10 deg C/Hr. The upper limit may be limited by the type and number of options installed.

Standard Features and Configurable Components (availability may vary by country)

ENVIRONMENTAL & INDUSTRY

HP Pro Mini 400 G9 Desktop PC

Eco-Label Certifications & declarations	This product has received or is in the process of being certified to the following approvals and may be labeled with one or more of these marks: • IT ECO declaration • US ENERGY STAR® • US Federal Energy Management Program (FEMP) • EPEAT® Climate+ registered in the United States. See http://www.epeat.net for registration status in your country.* • TCO Certified • China Energy Conservation Program (CECP) • China State Environmental Protection Administration (SEPA) • Taiwan Green Mark • Korea Eco-label • Japan PC Green label • Commission Regulation (EC) No 617/2013 (ErP Lot 3) **NOTE***: Based on US EPEAT® registration according to IEEE 1680.1-2018 EPEAT®. EPEAT® status varies by country. Visit http://www.epeat.net for more information.		
Sustainable Impact Specifications	• Ocean-bound plastic in Frame, Panel and Speaker[1] • 40% post-consumer recycled plastic[2] • Low halogen[3] • Outside Box and corrugated cushions are 100% sustainably sourced and recyclable[4] • Molded Paper Pulp Cushion inside box is 100% sustainably sourced and recyclable[5] • Bulk packaging available[6]		
System Configuration	The configuration used for the Energy Consumption and Declared Noise Emissions data for the Desktop model is based on a Typically Configured Desktop.		
Energy Consumption (in accordance with US ENERGY STAR® test method)	**115VAC, 60Hz**	**230VAC, 50Hz**	**100VAC, 60Hz**
Normal Operation (Short idle)	7.23 W	7.31 W	7.07 W
Normal Operation (Long idle)	2.16 W	2.24 W	2.01 W
Sleep	2.14 W	2.21 W	1.99 W
Off	0.62 W	0.7 W	0.47 W
	NOTE: Energy efficiency data listed is for an ENERGY STAR® certified product if offered within the model family. HP computers marked with the ENERGY STAR® Logo are certified with the applicable U.S. Environmental Protection Agency (EPA) ENERGY STAR® specifications for computers. If a model family does not offer ENERGY STAR® certified configurations, then energy efficiency data listed is for a typically configured PC featuring a hard disk drive, a high efficiency power supply, and a Microsoft Windows® operating system.		
Heat Dissipation*	**115VAC, 60Hz**	**230VAC, 50Hz**	**100VAC, 50Hz**
Normal Operation (Short idle)	24.7 BTU/hr	25 BTU/hr	24.2 BTU/hr
Normal Operation (Long idle)	7.4 BTU/hr	7.7 BTU/hr	6.9 BTU/hr
Sleep	7.3 BTU/hr	7.6 BTU/hr	6.8 BTU/hr
Off	2.1 BTU/hr	2.41 BTU/hr	1.6 BTU/hr

Standard Features and Configurable Components (availability may vary by country)

	NOTE: Heat dissipation is calculated based on the measured watts, assuming the service level is attained for one hour.	
Declared Noise Emissions (in accordance with ISO 7779 and ISO 9296)	Sound Power (L_{WAd}, bels)	Sound Pressure (L_{pAm}, decibels)
Typically Configured – Idle	2.9	17
Fixed Disk – Random writes	3.0	19
Longevity and upgrading	This product can be upgraded, possibly extending its useful life by several years. Upgradeable features and/or components contained in the product may include: • 2 SODIMM memory slots • Interchangeable M.2 PCIe NVME SSD & 2.5" SATA HDD Spare parts are available throughout the warranty period and or for up to "5" years after the end of production.	
Batteries	This battery(s) in this product comply with EU Directive 2006/66/EC Batteries used in the product do not contain: Mercury greater than 1ppm by weight Cadmium greater than 20ppm by weight Battery size: CR2032 (coin cell) Battery type: Lithium	
Additional Information	• This product is in compliance with the Restrictions of Hazardous Substances (RoHS) directive - 2011/65/EC. • This HP product is designed to comply with the Waste Electrical and Electronic Equipment (WEEE) Directive – 2002/96/EC. • This product is in compliance with California Proposition 65 (State of California; Safe Drinking Water and Toxic Enforcement Act of 1986). • Plastics parts weighing over 25 grams used in the product are marked per ISO11469 and ISO1043. • This product contains a minimum of 35% post-consumer recycled (PCR) plastic (by wt.); including 10% ITE-derived post-consumer recycled plastic.* • This product is 95.1% recycle-able when properly disposed of at end of life. *Recycled plastic content percentage is based on the definition set in the IEEE 1680.1-2018 standard.	
Packaging Materials (vary by country)	**External:**	PAPER/Paper 562g
	Internal:	PAPER/Molded Pulp 79g
		PLASTIC/Polyethylene low density - LDPE 16g
Material Usage	This product does not contain any of the following substances in excess of regulatory limits (refer to the HP General Specification for the Environment at http://www.hp.com/hpinfo/globalcitizenship/environment/pdf/gse.pdf): • Asbestos • Certain Azo Colorants • Certain Brominated Flame Retardants – may not be used as flame retardants in plastics • Cadmium • Chlorinated Hydrocarbons • Chlorinated Paraffins • Formaldehyde • Halogenated Diphenyl Methanes • Lead carbonates and sulfates • Lead and Lead compounds	

Standard Features and Configurable Components (availability may vary by country)

	• Mercuric Oxide Batteries • Nickel – finishes must not be used on the external surface designed to be frequently handled or carried by the user. • Ozone Depleting Substances • Polybrominated Biphenyls (PBBs) • Polybrominated Biphenyl Ethers (PBBEs) • Polybrominated Biphenyl Oxides (PBBOs) • Polychlorinated Biphenyl (PCB) • Polychlorinated Terphenyls (PCT) • Polyvinyl Chloride (PVC) – except for wires and cables, and certain retail packaging has been voluntarily removed from most applications. • Radioactive Substances • Tributyl Tin (TBT), Triphenyl Tin (TPT), Tributyl Tin Oxide (TBTO)
Packaging Usage	HP follows these guidelines to decrease the environmental impact of product packaging: • Design packaging materials for ease of disassembly. • Maximize the use of post-consumer recycled content materials in packaging materials. • Use readily recyclable packaging materials such as paper and corrugated materials. • Reduce size and weight of packages to improve transportation fuel efficiency. • Plastic packaging materials are marked according to ISO 11469 and DIN 6120 standards.
End-of-life Management and Recycling	HP Inc. offers end-of-life HP product return and recycling programs in many geographic areas. To recycle your product, please go to: http://www.hp.com/go/reuse-recycle or contact your nearest HP sales office. Products returned to HP will be recycled, recovered or disposed of in a responsible manner. The EU WEEE directive (2002/95/EC) requires manufacturers to provide treatment information for each product type for use by treatment facilities. This information (product disassembly instructions) is posted on the Hewlett Packard web site at: http://www.hp.com/go/recyclers. These instructions may be used by recyclers and other WEEE treatment facilities as well as HP OEM customers who integrate and re-sell HP equipment. Global Citizenship Report http://www.hp.com/hpinfo/globalcitizenship/gcreport/index.html Eco-label certifications http://www8.hp.com/us/en/hp-information/environment/ecolabels.html ISO 14001 certificates: http://www.hp.com/hpinfo/globalcitizenship/environment/pdf/PC_GBU_Product_Design_ISO_14K_Certificate.pdf and http://www.hp.com/hpinfo/globalcitizenship/environment/pdf/cert.pdf
Footnotes	1. Percentage of ocean-bound plastic contained in each component varies by product. 2. Recycled plastic content percentage is based on the definition set in the IEEE 1680.1-2018 standard. 3. External power supplies, WWAN modules, power cords, cables and peripherals excluded. 4. 100% outer box packaging and corrugated cushions made from sustainably sourced certified and recycled fibers. 5. Fiber cushions made from 100% recycled wood fiber and organic materials. 6. Plastic cushions are made from >90% recycled plastic.

Standard Features and Configurable Components (availability may vary by country)

HP Pro SFF 400 G9 Desktop PC

Eco-Label Certifications & declarations	This product has received or is in the process of being certified to the following approvals and may be labeled with one or more of these marks: • IT ECO declaration • US ENERGY STAR® • US Federal Energy Management Program (FEMP) • EPEA® Climate+ registered in the United States. See http://www.epeat.net for registration status in your country.* • TCO Certified • China Energy Conservation Program (CECP) • China State Environmental Protection Administration (SEPA) • Taiwan Green Mark • Korea Eco-label • Japan PC Green label • Commission Regulation (EC) No 617/2013 (ErP Lot 3) **NOTE***: Based on US EPEAT® registration according to IEEE 1680.1-2018 EPEAT®. EPEAT® status varies by country. Visit http://www.epeat.net for more information.		
Sustainable Impact Specifications	• Ocean-bound plastic in Speaker and Fan • 50% post-consumer recycled plastic • Low halogen • Outside Box and corrugated cushions are 100% sustainably sourced and recyclable • Molded Paper Pulp Cushion inside box is 100% sustainably sourced and recyclable • Bulk packaging available		
System Configuration	The configuration used for the Energy Consumption and Declared Noise Emissions data for the Desktop model is based on a Typically Configured Desktop.		
Energy Consumption (in accordance with US ENERGY STAR® test method)	**115VAC, 60Hz**	**230VAC, 50Hz**	**100VAC, 60Hz**
Normal Operation (Short idle)	12.12 W	12.15 W	12.10 W
Normal Operation (Long idle)	10.38 W	10.41 W	10.35 W
Sleep	0.94 W	0.94 W	0.94 W
Off	0.78 W	0.78 W	0.78 W
	NOTE: Energy efficiency data listed is for an ENERGY STAR® certified product if offered within the model family. HP computers marked with the ENERGY STAR® Logo are certified with the applicable U.S. Environmental Protection Agency (EPA) ENERGY STAR® specifications for computers. If a model family does not offer ENERGY STAR® certified configurations, then energy efficiency data listed is for a typically configured PC featuring a hard disk drive, a high efficiency , and a Microsoft Windows® operating system.		
Heat Dissipation*	**115VAC, 60Hz**	**230VAC, 50Hz**	**100VAC, 60Hz**
Normal Operation (Short idle)	41.34 BTU/hr	41.42 BTU/hr	41.26 BTU/hr
Normal Operation (Long idle)	35.40 BTU/hr	35.50 BTU/hr	35.28 BTU/hr
Sleep	3.21 BTU/hr	3.20 BTU/hr	3.21 BTU/hr
Off	2.65 BTU/hr	2.64 BTU/hr	2.64 BTU/hr

	NOTE: Heat dissipation is calculated based on the measured watts, assuming the service level is attained for one hour.

Declared Noise Emissions (in accordance with ISO 7779 and ISO 9296)	Sound Power (L_{WAd}, bels)	Sound Pressure (L_{pAm}, decibels)
Typically Configured – Idle	3.3	23
Fixed Disk – Random writes	4.6	36
Optical Drive sequential reads	3.2	23

Longevity and Upgrading	This product can be upgraded, possibly extending its useful life by several years. Upgradeable features and/or components contained in the product may include: • 2 DIMM memory slots • Interchangeable M.2 PCIe NVME SSD & 2.5”/3.5” SATA HDD Spare parts are available throughout the warranty period and or for up to “5” years after the end of production.		
Batteries	This battery(s) in this product comply with EU Directive 2006/66/EC Batteries used in the product do not contain: Mercury greater than 1ppm by weight Cadmium greater than 20ppm by weight Battery size: CR2032 (coin cell) Battery type: Lithium		
Additional Information	• This product is in compliance with the Restrictions of Hazardous Substances (RoHS) directive - 2011/65/EC. • This HP product is designed to comply with the Waste Electrical and Electronic Equipment (WEEE) Directive – 2002/96/EC. • This product is in compliance with California Proposition 65 (State of California; Safe Drinking Water and Toxic Enforcement Act of 1986). • Plastics parts weighing over 25 grams used in the product are marked per ISO11469 and ISO1043. • This product contains a minimum of 35% post-consumer recycled (PCR) plastic (by wt.); including 10% ITE-derived post-consumer recycled plastic.* • This product is 92.1% recycle-able when properly disposed of at end of life. *Recycled plastic content percentage is based on the definition set in the IEEE 1680.1-2018 standard.		
Packaging Materials (vary by country)	**External:**	PAPER/Corrugated	1104 g
	Internal:	PAPER/Molded pulp	462 g
		PLASTIC/Polyethylene low density	26 g
Material Usage	This product does not contain any of the following substances in excess of regulatory limits (refer to the HP General Specification for the Environment at http://www.hp.com/hpinfo/globalcitizenship/environment/pdf/gse.pdf): • Asbestos • Certain Azo Colorants • Certain Brominated Flame Retardants – may not be used as flame retardants in plastics • Cadmium • Chlorinated Hydrocarbons • Chlorinated Paraffins • Formaldehyde		

Standard Features and Configurable Components (availability may vary by country)

	• Halogenated Diphenyl Methanes • Lead carbonates and sulfates • Lead and Lead compounds • Mercuric Oxide Batteries • Nickel – finishes must not be used on the external surface designed to be frequently handled or carried by the user. • Ozone Depleting Substances • Polybrominated Biphenyls (PBBs) • Polybrominated Biphenyl Ethers (PBBEs) • Polybrominated Biphenyl Oxides (PBBOs) • Polychlorinated Biphenyl (PCB) • Polychlorinated Terphenyls (PCT) • Polyvinyl Chloride (PVC) – except for wires and cables, and certain retail packaging has been voluntarily removed from most applications. • Radioactive Substances • Tributyl Tin (TBT), Triphenyl Tin (TPT), Tributyl Tin Oxide (TBTO)
Packaging Usage	HP follows these guidelines to decrease the environmental impact of product packaging: • Design packaging materials for ease of disassembly. • Maximize the use of post-consumer recycled content materials in packaging materials. • Use readily recyclable packaging materials such as paper and corrugated materials. • Reduce size and weight of packages to improve transportation fuel efficiency. • Plastic packaging materials are marked according to ISO 11469 and DIN 6120 standards.
End-of-life Management and Recycling	HP Inc. offers end-of-life HP product return and recycling programs in many geographic areas. To recycle your product, please go to: http://www.hp.com/go/reuse-recycle or contact your nearest HP sales office. Products returned to HP will be recycled, recovered or disposed of in a responsible manner. The EU WEEE directive (2002/95/EC) requires manufacturers to provide treatment information for each product type for use by treatment facilities. This information (product disassembly instructions) is posted on the Hewlett Packard web site at: http://www.hp.com/go/recyclers. These instructions may be used by recyclers and other WEEE treatment facilities as well as HP OEM customers who integrate and re-sell HP equipment.
HP Inc. Corporate Environmental Information	For more information about HP's commitment to the environment: Global Citizenship Report http://www.hp.com/hpinfo/globalcitizenship/gcreport/index.html Eco-label certifications http://www8.hp.com/us/en/hp-information/environment/ecolabels.html ISO 14001 certificates: http://www.hp.com/hpinfo/globalcitizenship/environment/pdf/PC_GBU_Product_Design_ISO_14K_Certificate.pdf and http://www.hp.com/hpinfo/globalcitizenship/environment/pdf/cert.pdf

Standard Features and Configurable Components (availability may vary by country)

HP Pro Tower 400/480 G9 PCI Desktop PC

Eco-Label Certifications & declarations	This product has received or is in the process of being certified to the following approvals and may be labeled with one or more of these marks: • IT ECO declaration • US ENERGY STAR® • US Federal Energy Management Program (FEMP) • EPEAT® Climate+ registered in the United States. See http://www.epeat.net for registration status in your country.* • TCO Certified • China Energy Conservation Program (CECP) • China State Environmental Protection Administration (SEPA) • Taiwan Green Mark • Korea Eco-label • Japan PC Green label • Commission Regulation (EC) No 617/2013 (ErP Lot 3) **NOTE***: *Based on US EPEAT® registration according to IEEE 1680.1-2018 EPEAT®. EPEAT® status varies by country. Visit http://www.epeat.net for more information.		
Sustainable Impact Specifications	• Ocean-bound plastic in Speaker and Fan • 60% post-consumer recycled plastic • Low halogen • Outside Box and corrugated cushions are 100% sustainably sourced and recyclable • Molded Paper Pulp Cushion inside box is 100% sustainably sourced and recyclable • Bulk packaging available		
System Configuration	The configuration used for the Energy Consumption and Declared Noise Emissions data for the Desktop model is based on a Typically Configured Desktop.		
Energy Consumption (in accordance with US ENERGY STAR® test method)	**115VAC, 60Hz**	**230VAC, 50Hz**	**100VAC, 60Hz**
Normal Operation (Short idle)	12.69 W	12.69 W	12.69 W
Normal Operation (Long idle)	10.95 W	10.97 W	10.95 W
Sleep	0.99 W	0.99 W	0.98 W
Off	0.80 W	0.80 W	0.80 W
	NOTE: Energy efficiency data listed is for an ENERGY STAR® certified product if offered within the model family. HP computers marked with the ENERGY STAR® Logo are certified with the applicable U.S. Environmental Protection Agency (EPA) ENERGY STAR® specifications for computers. If a model family does not offer ENERGY STAR® certified configurations, then energy efficiency data listed is for a typically configured PC featuring a hard disk drive, a high efficiency power supply, and a Microsoft Windows® operating system.		
Heat Dissipation*	**115VAC, 60Hz**	**230VAC, 50Hz**	**100VAC, 60Hz**
Normal Operation (Short idle)	43.27 BTU/hr	43.28 BTU/hr	43.26 BTU/hr
Normal Operation (Long idle)	37.35 BTU/hr	37.40 BTU/hr	37.34 BTU/hr
Sleep	3.36 BTU/hr	3.37 BTU/hr	3.35 BTU/hr
Off	2.72 BTU/hr	2.72 BTU/hr	2.71 BTU/hr
	NOTE: Heat dissipation is calculated based on the measured watts, assuming the service level is attained for one hour.		

Standard Features and Configurable Components (availability may vary by country)

Declared Noise Emissions (in accordance with ISO 7779 and ISO 9296)	Sound Power (L_{WAd}, bels)	Sound Pressure (L_{pAm}, decibels)
Typically Configured – Idle	3.1	21
Fixed Disk – Random writes	3.2	22
Optical Drive - Sequential reads	4.0	28

Longevity and Upgrading	This product can be upgraded, possibly extending its useful life by several years. Upgradeable features and/or components contained in the product may include: • 2 DIMM memory slots • Interchangeable M.2 PCIe NVME SSD & 2.5”/3.5” SATA HDD Spare parts are available throughout the warranty period and or for up to “5” years after the end of production.		
Batteries	This battery(s) in this product complies with EU Directive 2006/66/EC Batteries used in the product do not contain: Mercury greater than 1ppm by weight Cadmium greater than 20ppm by weight Battery size: CR2032 (coin cell) Battery type: Lithium		
Additional Information	• This product is in compliance with the Restrictions of Hazardous Substances (RoHS) directive - 2011/65/EC. • This HP product is designed to complies with the Waste Electrical and Electronic Equipment (WEEE) Directive – 2002/96/EC. • This product is in compliance with California Proposition 65 (State of California; Safe Drinking Water and Toxic Enforcement Act of 1986). • This product is in compliance with the IEEE 1680.1 (EPEAT) standard at the ® Climate+ level, see http://www.epeat.net • Plastics parts weighing over 25 grams used in the product are marked per ISO11469 and ISO1043. • This product contains 44.4% post-consumer recycled plastic (by wt.) • This product is 92.1% recycle-able when properly disposed of at end of life.		
Packaging Materials (vary by country)	**External:**	PAPER/Corrugated	1110 g
		PAPER/Molded Pulp	654 g
	Internal:	PLASTIC/Polyethylene low density - LDPE	32 g
Material Usage	This product does not contain any of the following substances in excess of regulatory limits (refer to the HP General Specification for the Environment at http://www.hp.com/hpinfo/globalcitizenship/environment/pdf/gse.pdf): • Asbestos • Certain Azo Colorants • Certain Brominated Flame Retardants – may not be used as flame retardants in plastics • Cadmium • Chlorinated Hydrocarbons • Chlorinated Paraffins • Formaldehyde • Halogenated Diphenyl Methanes • Lead carbonates and sulfates • Lead and Lead compounds • Mercuric Oxide Batteries		

Standard Features and Configurable Components (availability may vary by country)

	• Nickel – finishes must not be used on the external surface designed to be frequently handled or carried by the user. • Ozone Depleting Substances • Polybrominated Biphenyls (PBBs) • Polybrominated Biphenyl Ethers (PBBEs) • Polybrominated Biphenyl Oxides (PBBOs) • Polychlorinated Biphenyl (PCB) • Polychlorinated Terphenyls (PCT) • Polyvinyl Chloride (PVC) – except for wires and cables, and certain retail packaging has been voluntarily removed from most applications. • Radioactive Substances • Tributyl Tin (TBT), Triphenyl Tin (TPT), Tributyl Tin Oxide (TBTO)
Packaging Usage	HP follows these guidelines to decrease the environmental impact of product packaging: • Design packaging materials for ease of disassembly. • Maximize the use of post-consumer recycled content materials in packaging materials. • Use readily recyclable packaging materials such as paper and corrugated materials. • Reduce size and weight of packages to improve transportation fuel efficiency. • Plastic packaging materials are marked according to ISO 11469 and DIN 6120 standards.
End-of-life Management and Recycling	HP Inc. offers end-of-life HP product return and recycling programs in many geographic areas. To recycle your product, please go to: http://www.hp.com/go/reuse-recycle or contact your nearest HP sales office. Products returned to HP will be recycled, recovered or disposed of in a responsible manner. The EU WEEE directive (2002/95/EC) requires manufacturers to provide treatment information for each product type for use by treatment facilities. This information (product disassembly instructions) is posted on the Hewlett Packard web site at: http://www.hp.com/go/recyclers. These instructions may be used by recyclers and other WEEE treatment facilities as well as HP OEM customers who integrate and re-sell HP equipment.
HP Inc. Corporate Environmental Information	For more information about HP's commitment to the environment: Global Citizenship Report http://www.hp.com/hpinfo/globalcitizenship/gcreport/index.html Eco-label certifications http://www8.hp.com/us/en/hp-information/environment/ecolabels.html ISO 14001 certificates: http://www.hp.com/hpinfo/globalcitizenship/environment/pdf/PC_GBU_Product_Design_ISO_14K_Certificate.pdf and http://www.hp.com/hpinfo/globalcitizenship/environment/pdf/cert.pdf

Standard Features and Configurable Components (availability may vary by country)

HP ProOne 440 23.8 inch G9 All-in-One Desktop PC

Eco-Label Certifications & declarations	This product has received or is in the process of being certified to the following approvals and may be labeled with one or more of these marks: • IT ECO declaration • US ENERGY STAR® • US Federal Energy Management Program (FEMP) • EPEAT® Climate+ registered in the United States. See http://www.epeat.net for registration status in your country. • TCO Certified • China Energy Conservation Program (CECP) • China State Environmental Protection Administration (SEPA) • Taiwan Green Mark • Korea Eco-label • Japan PC Green label • Commission Regulation (EC) No 617/2013 (ErP Lot 3)		
Sustainable Impact Specifications	• Ocean-bound plastic in CPU Fan and Speaker • 45% post-consumer recycled plastic • External Power Supply 90% Efficiency • Low halogen • Outside Box and corrugated cushions are 100% sustainably sourced and recyclable • Recycled Plastic cushions		
System Configuration	The configuration used for the Energy Consumption and Declared Noise Emissions data for the Desktop model is based on a "Typically Configured Desktop".		
Energy Consumption (in accordance with US ENERGY STAR® test method)	**115VAC, 60Hz**	**230VAC, 50Hz**	**100VAC, 60Hz**
Normal Operation (Short idle)	16.13 W	16.47 W	16.25 W
Normal Operation (Long idle)	4.60 W	4.73 W	4.87 W
Sleep	1.75 W	1.76 W	1.73 W
Off	0.67 W	0.62 W	0.62 W
	NOTE: Energy efficiency data listed is for an ENERGY STAR® certified product if offered within the model family. HP computers marked with the ENERGY STAR® Logo are certified with the applicable U.S. Environmental Protection Agency (EPA) ENERGY STAR® specifications for computers. If a model family does not offer ENERGY STAR® certified configurations, then energy efficiency data listed is for a typically configured PC featuring a hard disk drive, a high efficiency power supply, and a Microsoft Windows® operating system.		
Heat Dissipation*	**115VAC, 60Hz**	**230VAC, 50Hz**	**100VAC, 60Hz**
Normal Operation (Short idle)	55 BTU/hr	56 BTU/hr	55 BTU/hr
Normal Operation (Long idle)	15 BTU/hr	16 BTU/hr	17 BTU/hr
Sleep	6 BTU/hr	6 BTU/hr	6 BTU/hr
Off	2 BTU/hr	2 BTU/hr	2 BTU/hr
	NOTE: Heat dissipation is calculated based on the measured watts, assuming the service level is attained for one hour.		
Declared Noise Emissions	Sound Power (L_{WAd}, bels)	Sound Pressure (L_{pAm}, decibels)	

Standard Features and Configurable Components (availability may vary by country)

(in accordance with ISO 7779 and ISO 9296)		
Typically Configured – Idle	2.6	15
Fixed Disk – Random writes	2.6	16
Optical Drive – Sequential reads	4.7	35

Longevity and Upgrading	This product can be upgraded, possibly extending its useful life by several years. Upgradeable features and/or components contained in the product may include: • 2 SODIMM memory slots Spare parts are available throughout the warranty period and or for up to "5" years after the end of production.		
Batteries	This battery(s) in this product comply with EU Directive 2006/66/EC Batteries used in the product do not contain: Mercury greater than 1ppm by weight Cadmium greater than 20ppm by weight Battery size: CR2032 (coin cell) Battery type: Lithium		
Additional Information	• This product is in compliance with the Restrictions of Hazardous Substances (RoHS) directive - 2011/65/EC. • This HP product is designed to comply with the Waste Electrical and Electronic Equipment (WEEE) Directive – 2002/96/EC. • This product is in compliance with California Proposition 65 (State of California; Safe Drinking Water and Toxic Enforcement Act of 1986). • This product is in compliance with the IEEE 1680 (EPEAT) standard, see http://www.epeat.net. • Plastics parts weighing over 25 grams used in the product are marked per ISO11469 and ISO1043. • This product contains a minimum of 50% post-consumer recycled (PCR) plastic (by wt.); including 10% ITE-derived post-consumer recycled plastic.* • This product is 95.9% recycle-able when properly disposed of at end of life. *Recycled plastic content percentage is based on the definition set in the IEEE 1680.1-2018 standard.		
Packaging Materials (vary by country)	**External:**	PAPER/Corrugated	2072 g
		Paper/Paperboard	1040 g
	Internal:	PLASTIC/EPE (Expanded Polyethylene)	182 g
		PLASTIC/Polyethylene low density - LDPE	45 g
	The plastic packaging material contains at least 0.0% recycled content.		
	The corrugated paper packaging materials contains at least 90.0% recycled content.		
Material Usage	This product does not contain any of the following substances in excess of regulatory limits (refer to the HP General Specification for the Environment at http://www.hp.com/hpinfo/globalcitizenship/environment/pdf/gse.pdf): • Asbestos • Certain Azo Colorants • Certain Brominated Flame Retardants – may not be used as flame retardants in plastics • Cadmium • Chlorinated Hydrocarbons • Chlorinated Paraffins • Formaldehyde • Halogenated Diphenyl Methanes		

	• Lead carbonates and sulfates • Lead and Lead compounds • Mercuric Oxide Batteries • Nickel – finishes must not be used on the external surface designed to be frequently handled or carried by the user. • Ozone Depleting Substances • Polybrominated Biphenyls (PBBs) • Polybrominated Biphenyl Ethers (PBBEs) • Polybrominated Biphenyl Oxides (PBBOs) • Polychlorinated Biphenyl (PCB) • Polychlorinated Terphenyls (PCT) • Polyvinyl Chloride (PVC) – except for wires and cables, and certain retail packaging has been voluntarily removed from most applications. • Radioactive Substances • Tributyl Tin (TBT), Triphenyl Tin (TPT), Tributyl Tin Oxide (TBTO)
Packaging Usage	HP follows these guidelines to decrease the environmental impact of product packaging: • Eliminate the use of heavy metals such as lead, chromium, mercury and cadmium in packaging materials. • Eliminate the use of ozone-depleting substances (ODS) in packaging materials. • Design packaging materials for ease of disassembly. • Maximize the use of post-consumer recycled content materials in packaging materials. • Use readily recyclable packaging materials such as paper and corrugated materials. • Reduce size and weight of packages to improve transportation fuel efficiency. • Plastic packaging materials are marked according to ISO 11469 and DIN 6120 standards.
End-of-life Management and Recycling	HP Inc. offers end-of-life HP product return and recycling programs in many geographic areas. To recycle your product, please go to: http://www.hp.com/go/reuse-recycle or contact your nearest HP sales office. Products returned to HP will be recycled, recovered or disposed of in a responsible manner. The EU WEEE directive (2002/95/EC) requires manufacturers to provide treatment information for each product type for use by treatment facilities. This information (product disassembly instructions) is posted on the Hewlett Packard web site at: http://www.hp.com/go/recyclers. These instructions may be used by recyclers and other WEEE treatment facilities as well as HP OEM customers who integrate and re-sell HP equipment. Global Citizenship Report http://www.hp.com/hpinfo/globalcitizenship/gcreport/index.html Eco-label certifications http://www8.hp.com/us/en/hp-information/environment/ecolabels.html ISO 14001 certificates: http://h20195.www2.hp.com/V2/GetDocument.aspx?docname=c04755842 and http://www.hp.com/hpinfo/globalcitizenship/environment/pdf/cert.pdf
footnotes	• Percentage of ocean-bound plastic contained in each component varies by product • Recycled plastic content percentage is based on the definition set in the IEEE 1680.1-2018 standard. • External power supplies, WWAN modules, power cords, cables and peripherals excluded. • 100% outer box packaging and corrugated cushions made from sustainably sourced certified and recycled fibers. • Plastic cushions are made from >90% recycled plastic.

SERVICE AND SUPPORT

On-site Warranty[1]: One-year (1-1-1) limited warranty delivers one year of on-site, next business day[2] service for parts and labor support. Service offers terms up to 5 years by choosing an optional HP Care Pack. To choose the right level of service for your HP product, visit HP Care Pack Central: http://www.hp.com/go/cpc.[3]

1. Terms and conditions may vary by country. Certain restrictions and exclusions apply. Other warranty variations may be offered in your region.
2. On-site service may be provided pursuant to a service contract between HP and an authorized HP third-party provider and is not available in certain countries. Global service response times are based on commercially reasonable best effort and may vary by country.
3. Service levels and response times for HP Care Packs may vary depending on your geographic location. Service starts on date of hardware purchase. Restrictions and limitations apply. For details, visit www.hp.com/go/cpc. HP services are governed by the applicable HP terms and conditions of service provided or indicated to Customer at the time of purchase. Customer may have additional statutory rights according to applicable local laws, and such rights are not in any way affected by the HP terms and conditions of service or the HP Limited Warranty provided with your HP Product.

PROCESSORS

12th /13th/14th Generation Intel® Core™ Processors[1]

All HP ProDesk & ProOne 400 Business PC models featuring this technology include processors that are part of the Intel® Stable Image Platform Program (SIPP) designed to ensure the stability promise inherent in the value proposition of the HP ProDesk and ProOne 400 Business PC.

Intel® Advanced Management Technology (AMT)[1] v16 – An advanced set of remote management features and functionality which provides network administrators the latest and most effective tools to remotely discover, heal, and protect networked client systems regardless of the system's health or power state. AMT 16 includes the following advanced management functions:

- Support for configuration of Intel® AMT 16.0 capabilities
- No reset after provisioning
- Support for Intel® Enterprise Digital Fence
- The Platform Discovery Utility can now discover these additional Intel® products:
  - Intel® Identity Protection Technology with One Time Password
  - Public Key Infrastructure
  - Multi Factor Authentication
- Profile Editor and Profile Editor Plugin Interface
- Required Permissions for Solutions Framework

1. Intel® Active Management Technology requires an Intel® AMT-enabled chipset, network hardware and software, as well as connection with a power source and a corporate network connection. Setup requires configuration by the purchaser and may require scripting with the management console or further integration into existing security frameworks to enable certain functionality. It may also require modifications of implementation of new business processes.

DISPLAY PANEL SPECIFICATIONS

NOTE: All specifications represent the typical specifications provided by HP's component manufacturers; actual performance may vary either higher or lower.

HP ProOne 440 23.8 inch G9 All-in-One Desktop PC

23.8" diagonal IPS widescreen WLED backlit anti-glare LCD (1920 x 1080)
Projected Capacitive Touch supports up to 10 touch-points
Support HW low blue light feature

Type	IPS WLED Backlit LCD
Active area (mm)	527.04 x 296.46
Native Resolution (HxV)	1920 x 1080
Refresh Rate	60 Hz @ 1920 x 1080
Aspect ratio	16:9
Pixel pitch (HxV)(mm)	0.2745 x 0.2745
Contrast ratio	1000:1
Brightness*	300nits*
Viewing angle (HxV)	178° x 178°
Backlight lamp life (to half brightness)	30,000 hours minimum
Color support	Up to 16.7 million colors with 8 Bit(6 Bit + FRC)
Color gamut	sRGB 99%
Anti-glare	Yes
Response Time	14ms
Default color temperature	Warm (6500K)

*Actual brightness will be lower with touchscreen

23.8" diagonal IPS widescreen WLED backlit anti-glare LCD (1920 x 1080) non-touch
Support HW low blue light feature

Type	IPS WLED Backlit LCD
Active area (mm)	527.04 x 296.46
Native Resolution (HxV)	1920 x 1080
Refresh Rate	60 Hz @ 1920 x 1080
Aspect ratio	16:9
Pixel pitch (HxV)(mm)	0.2745 x 0.2745
Contrast ratio	1000:1
Brightness*	250nits*
Viewing angle (HxV)	178° x 178°
Backlight lamp life (to half brightness)	30,000 hours minimum
Color support	Up to 16.7 million colors with 8 Bit(6 Bit + FRC)
Color gamut	NTSC 72%
Anti-glare	Yes
Response Time	14ms
Default color temperature	Warm (6500K)

*Actual brightness will be lower with touchscreen

ALL-IN-ONE STAND SPECIFICATIONS

HP ProOne 440 23.8 inch G9 All-in-One Desktop PC

Cantilever Stand (Fixed Height Tilt Stand)	**Tilt Angle**	-5° to +20°
	Rotation (Swivel)	None
	Pivot	None

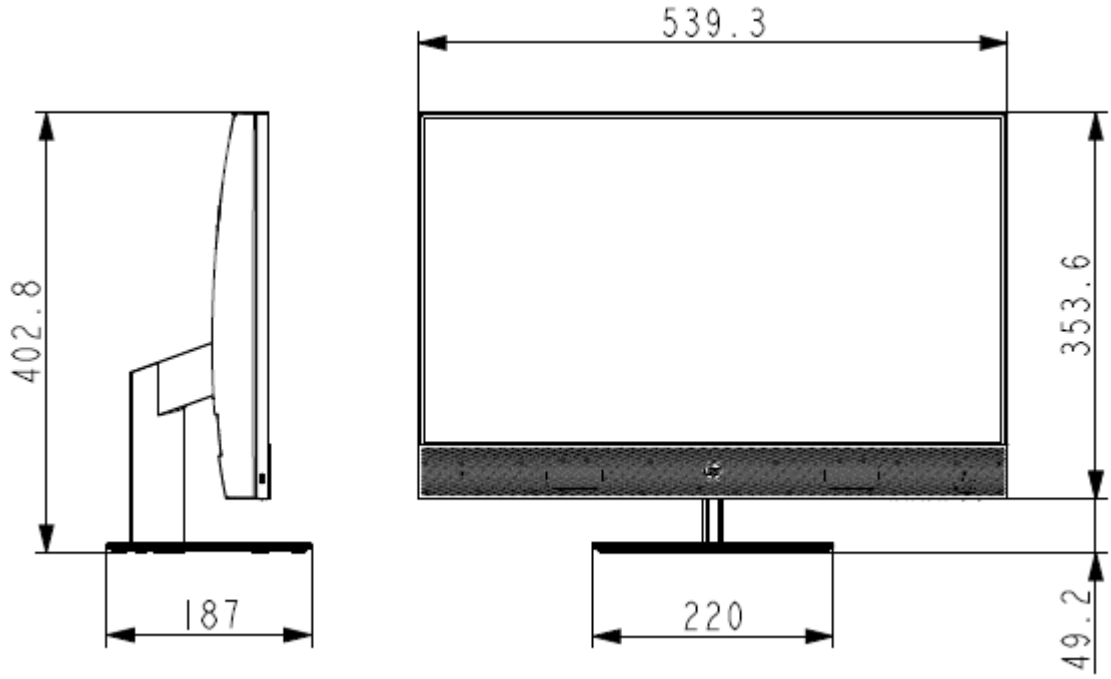

Technical Specifications - All-in-One Stand Specifications

Adjustable Height Stand	**Height Adjustment (Landscape Mode)**	5.12 in / 130mm
	Height Adjustment (Portrait Mode)	N/A
	Tilt Angle	-5° to +20°
	Rotation (Swivel)	±45°
	Pivot	None

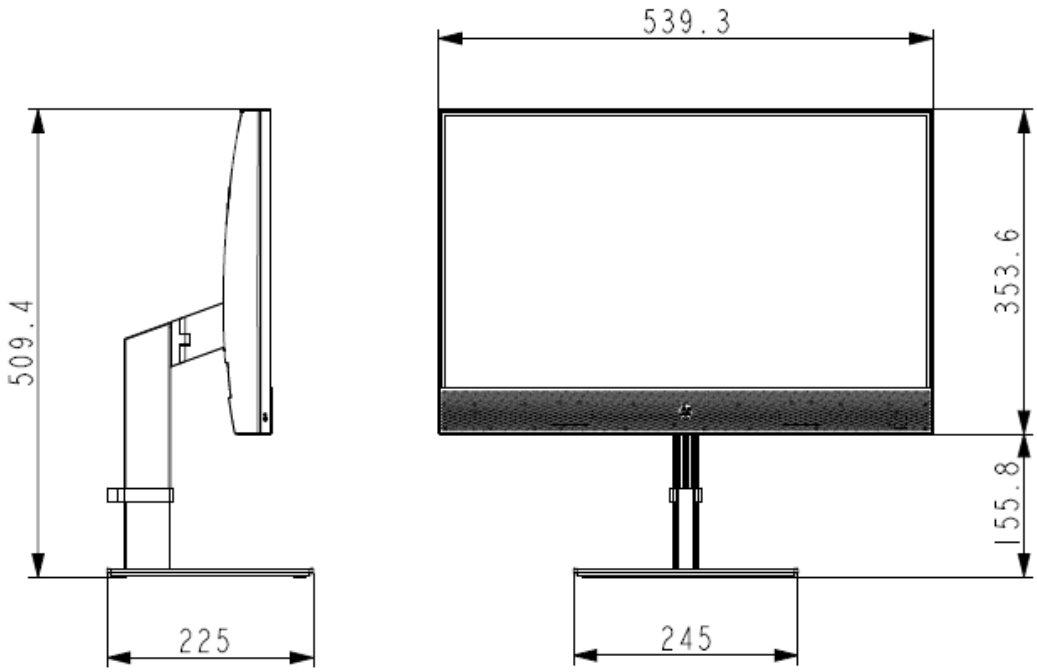

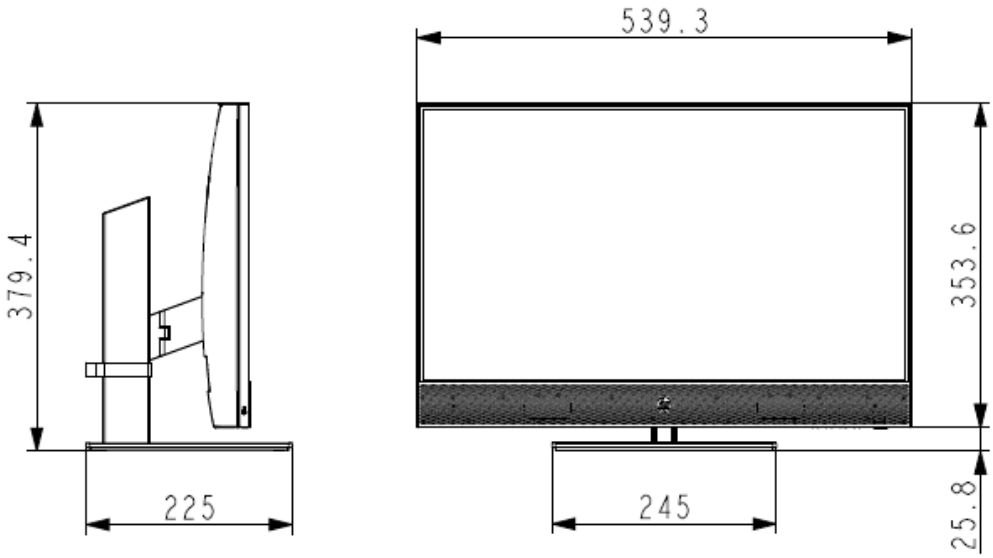

Technical Specifications - All-in-One Stand Specifications

No Stand
(VESA COVER with EPS Holder)

Tilt Angle	None
Rotation (Swivel)	None
Pivot	None

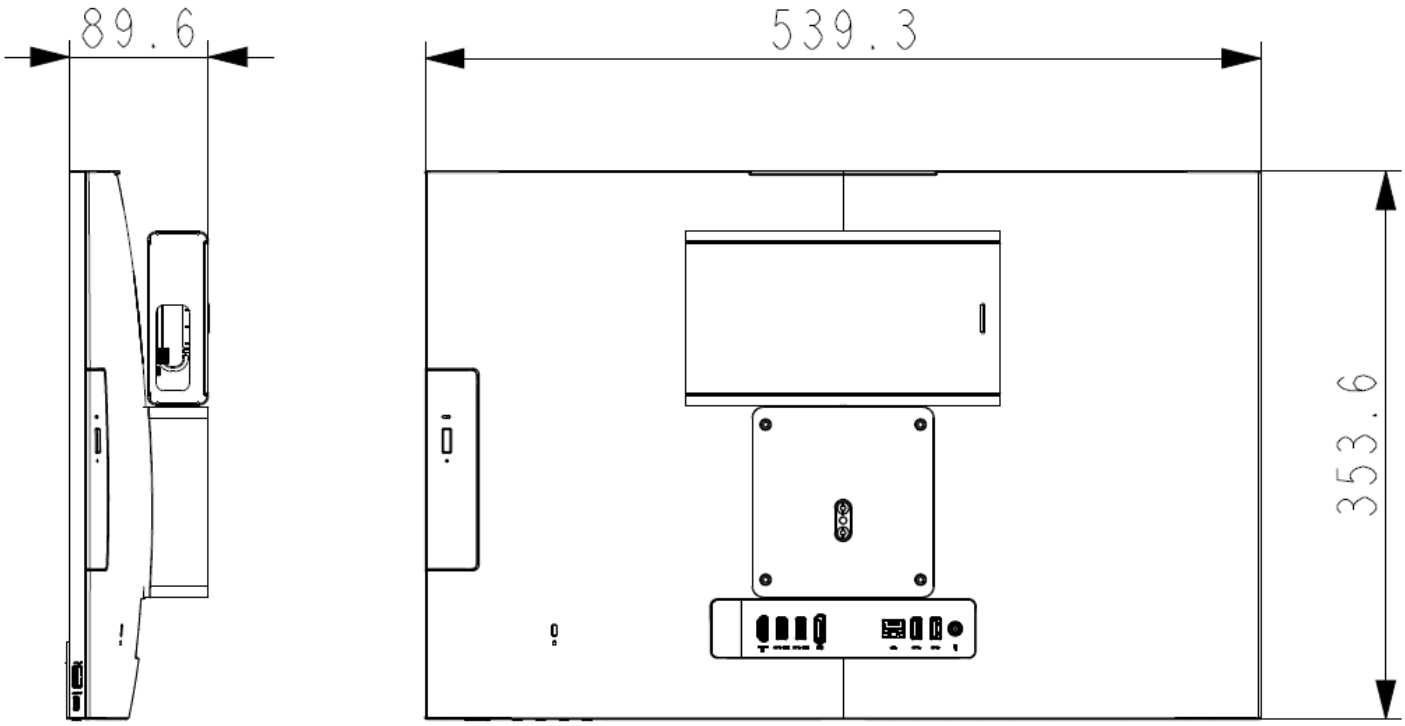

GRAPHICS

HP Pro Mini 400 G9 Desktop PC

Intel® UHD Graphics (integrated)

Graphics Controller	Integrated
DisplayPort™	Multimode capable; supports HDCP, Display Port Audio , HBR2 link rates and Multi-Stream Technology for a maximum of 3 displays connected to any output controlled by Intel® Graphics
HDMI (on board/optional)	Supports HDMI 2.1 features Supports HDCP 2.3 Supports audio over HDMI
VGA (optional)	VGA output
USB-C® DP Alt Mode(optional)	DisplayPort™ over the USB-C® module
Memory	The actual amount of maximum graphics memory can be >4GB. System memory is allocated for graphics as needed using Intel's Dynamic Video Memory Technology (DVMT), to provide an optimal balance between graphics and system memory use.
Maximum Color Depth	up to 16 bits/color
Graphics/Video API Support	HEVC 10b Enc/12b Dec HW VP9 12b Dec HW HDR Rec. 2020 DX12
Max. Resolution (HDMI)	4096 x 2160@60Hz
Max. Resolution (DP)	4096 x 2304@60Hz
Max Resolution (optional VGA)	2048 x 1536@60Hz
Max Resolution (optional DP)	5120 x 2160@60Hz
Max Resolution (optional HDMI)	3840 x 2160@60Hz

Technical Specifications – Graphics

HP Pro SFF 400 G9 Desktop PC

Intel® HD Graphics (integrated)

VGA Controller	Integrated
DisplayPort™	Multimode capable; supports HDCP, Display Port Audio, Onboard support HBR2 link rates/option DP support to HBR3 and Multi-Stream Technology for a maximum of 3 displays connected to any output controlled by Intel® Graphics
HDMI (onboard / optional)	Supports HDMI 2.1 features (onboard HDMI support HDMI1.4; Option HDMI support HDMI 2.1) Supports HDCP 2.3 (Support HDCP 1.4/2.3) Supports audio over HDMI
VGA (optional)	VGA output
USB-C® DP Alt Mode (optional)	DisplayPort™ over the optional USB-C® module (Support DP1.4 HBR2)
Memory	The actual amount of maximum graphics memory can be >4GB. System memory is allocated for graphics as needed using Intel's Dynamic Video Memory Technology (DVMT), to provide an optimal balance between graphics and system memory use.
Maximum Color Depth	up to 16 bits/color
Graphics/Video API Support	HEVC 10b Enc/12b Dec HW VP9 12b Dec HW à AV1 decode support 8/10b, 4:2:0 HDR Rec. 2020 DX12
Max. Resolution (VGA Option)	2048 x 1536@60Hz
Max. Resolution (Onboard HDMI)	1920 x 1080@60Hz
Max. Resolution (Option HDMI)	3840 x 2160@60Hz
Max. Resolution (On board DP)	HBR2: 4096 x 2304@60hz 24 bpp
Max. Resolution (Option DP)	HBR3: 5120 x3200 @60hz 24 bpp
Max. Resolution (Option Type C)	DP HBR2: 4096 x2304 @60hz 24bpp

NVIDIA® Quadro T400 2GB Graphics Card

Engine Clock	2100 MHz
Memory Clock	5001 MHz
Memory Size (width)	2GB (64-bit)
Memory Type	256M x 16 GDDR6
Max. Resolution (DP)	7680x4320@120Hz
Multi Display Support	3 displays
HDCP Compliance	Yes
Rear I/O connectors (bracket)	mDPx3
Cooling (active/passive)	Active fan-sink (Active cooling with dynamic speed)
Total power consumption (W)	30W
PCB form-factor with bracket	LP PCB with LP bracket

Technical Specifications – Graphics

NVIDIA® T400 4GB Graphics Card

Engine Clock	2100 MHz
Memory Clock	5001 MHz
Memory Size (width)	4GB (64-bit)
Memory Type	512M x 16 GDDR6
Max. Resolution (DP)	7680x4320@120Hz
Multi Display Support	3 displays
HDCP Compliance	Yes
Rear I/O connectors (bracket)	mDPx3
Cooling (active/passive)	Active fan-sink (Active cooling with dynamic speed)
Total power consumption (W)	30W
PCB form-factor with bracket	LP PCB with LP bracket

AMD Radeon™ RX 6300 2GB GDDR6 Graphics card

Engine Clock	Base: 1512 Mhz Boost: 2040 Mhz
Memory Size / Width	2GB / 32bit
Graphic Memory Type / Clock	512Mx32 GDDR6 ,1 pcs / 16Gbps
Max. Resolution (HDMI)	7680x4320@60Hz
Max. Resolution (DP)	7680x4320@120Hz
Multi Display Support	2 displays
HDCP Compliance	Yes
Rear I/O connectors (bracket)	HDMIx1+ DPx1 (LP)
Cooling (active/passive)	Active
Total power consumption (W)	57W
Form-factor	X:160.2mm/Y:68.9mm/Z: 22.6mm PCB with single slot

Technical Specifications – Graphics

HP Pro Tower 400 G9 Desktop PC

Intel® HD Graphics (integrated)

VGA Controller	Integrated
DisplayPort™	Multimode capable; supports HDCP, Display Port Audio, Onboard support HBR2 link rates/option DP support to HBR3 and Multi-Stream Technology for a maximum of 3 displays connected to any output controlled by Intel® Graphics
HDMI (onboard / optional)	Supports HDMI 2.1 features (onboard HDMI support HDMI1.4; Option HDMI support HDMI 2.1) Supports HDCP 2.3 (Support HDCP 1.4/2.3) Supports audio over HDMI
VGA (optional)	VGA output
USB-C® DP Alt Mode (optional)	DisplayPort™ over the optional USB-C® module (Support DP1.4 HBR2)
Memory	The actual amount of maximum graphics memory can be >4GB. System memory is allocated for graphics as needed using Intel's Dynamic Video Memory Technology (DVMT), to provide an optimal balance between graphics and system memory use.
Maximum Color Depth	up to 16 bits/color
Graphics/Video API Support	HEVC 10b Enc/12b Dec HW VP9 12b Dec HW à AV1 decode support 8/10b, 4:2:0 HDR Rec. 2020 DX12
Max. Resolution (VGA Option)	2048 x 1536@60Hz
Max. Resolution (Onboard HDMI)	1920 x 1080@60Hz
Max. Resolution (Option HDMI)	3840 x 2160@60Hz
Max. Resolution (On board DP)	HBR2: 4096 x 2304@60hz 24 bpp
Max. Resolution (Option DP)	HBR3: 5120 x3200 @60hz 24 bpp
Max. Resolution (Option Type C)	DP HBR2: 4096 x2304 @60hz 24bpp

NVIDIA® Quadro T400 2GB Graphics Card

Engine Clock	2100 MHz
Memory Clock	5001 MHz
Memory Size (width)	2GB (64-bit)
Memory Type	256M x 16 GDDR6
Max. Resolution (DP)	7680x4320@120Hz
Multi Display Support	3 displays
HDCP Compliance	Yes
Rear I/O connectors (bracket)	mDPx3
Cooling (active/passive)	Active fan-sink (Active cooling with dynamic speed)
Total power consumption (W)	30W
PCB form-factor with bracket	LP PCB with LP bracket

NVIDIA® T400 4GB Graphics Card

Engine Clock	2100 MHz
Memory Clock	5001 MHz
Memory Size (width)	4GB (64-bit)
Memory Type	512M x 16 GDDR6
Max. Resolution (DP)	7680x4320@120Hz
Multi Display Support	3 displays
HDCP Compliance	Yes
Rear I/O connectors (bracket)	mDPx3
Cooling (active/passive)	Active fan-sink (Active cooling with dynamic speed)

Total power consumption (W)	30W
PCB form-factor with bracket	LP PCB with LP bracket

NVIDIA® GeForce® RTX 3050 8GB GDDR6 Graphics Card

Engine Clock	Base: 1515 Mhz Boost: 1755 Mhz
Frame Buffer Size / Width	8GB/128bit
Graphic Memory Type / Clock	512Mx32 GDDR6 @ 4 pcs/14Gbps
Max. Resolution (HDMI)	7680x4320@60Hz
Max. Resolution (DP)	7680x4320@60Hz
Multi Display Support	4 displays
HDCP Compliance	Yes
Rear I/O connectors (bracket)	HDMIx1+ DPx3
Cooling (active/passive)	Active fansink with 4 pin fan control
Total power consumption (W)	120W
Form-factor	ATX (X:144.7mm/Y:111.15mm/Z: 36.70mm) PCB with ATX dual slot bracket

NOTE: PCIe 2x4 power connector requires for RTX3050 with 400W PSU

Intel® Arc™ A380 6GB GDDR6 Graphics card[4]

Engine Clock	2150Mhz
Frame Buffer Size / Width	6GB/96bit
Graphic Memory Type / Clock	GDDR6 ,3 pcs/15.5Gbps
Max. Resolution (HDMI)	4096 x2160@60Hz
Max. Resolution (DP)	7680x4320@60Hz
Multi Display Support	4 displays
HDCP Compliance	Yes
Rear I/O connectors (bracket)	DP x3 + HDMI x1
Cooling (active/passive)	Active
Total power consumption (W)	75W

AMD Radeon™ RX 6300 2GB GDDR6 Graphics card

Engine Clock	Base: 1512 Mhz Boost: 2040 Mhz
Memory Size / Width	2GB / 32bit
Graphic Memory Type / Clock	512Mx32 GDDR6 ,1 pcs / 16Gbps
Max. Resolution (HDMI)	7680x4320@60Hz
Max. Resolution (DP)	7680x4320@120Hz
Multi Display Support	2 displays
HDCP Compliance	Yes
Rear I/O connectors (bracket)	HDMIx1+ DPx1 (LP)
Cooling (active/passive)	Active
Total power consumption (W)	57W
Form-factor	X:160.2mm/Y:68.9mm/Z: 22.6mm PCB with single slot

HP ProOne 440 23.8 inch G9 All-in-One Desktop PC

Intel® UHD Graphics (integrated)

Graphics Controller	Integrated
DisplayPort™	Multimode capable; supports HDCP, Display Port Audio , HBR2 link rates and Multi-Stream Technology for a maximum of 3 displays connected to any output controlled by Intel® Graphics
HDMI (onboard / optional)	Supports HDMI 2.1 features Supports HDCP 2.3 Supports audio over HDMI
USB-C® DP Alt Mode (optional)	DisplayPort™ over the USB-C® module
Memory	The actual amount of maximum graphics memory can be >4GB. System memory is allocated for graphics as needed using Intel's Dynamic Video Memory Technology (DVMT), to provide an optimal balance between graphics and system memory use.
Maximum Color Depth	up to 16 bits/color
Graphics/Video API Support	HEVC 10b Enc/12b Dec HW VP9 12b Dec HW HDR Rec. 2020 DX12
Max. Resolution (HDMI)	4096 x 2160@60Hz
Max. Resolution (DP)	4096 x 2304@60Hz
Max. Resolution (Optional VGA)	2048 x 1536@60Hz
Max. Resolution (Optional DP)	5120 x 2160@60Hz
Max. Resolution (Optional HDMI)	3840 x 2160@60Hz

AMD Radeon™ RX 6300 2GB GDDR6 Graphics card

Engine Clock	Base: 1512 Mhz Boost: 2040 Mhz
Memory Size / Width	2GB / 32bit
Graphic Memory Type / Clock	512Mx32 GDDR6 ,1 pcs / 16Gbps
HDCP Compliance	Yes
Total power consumption (W)	25W

STORAGE

NOTE: Starting from November 1st, 2023, all shipments will require Windows to be installed when selecting a SSD.
HDD can only be configured as additional data drives and not as the boot drive.

1TB 7200RPM 3.5in SATA HDD

Capacity	1TB
Rotational Speed	7,200 rpm
Interface	SATA 6 Gb/s
Buffer Size	64MB
Logical Blocks	1,953,525,168
Seek Time	11 ms (Average)
Height	1in/2.54cm
Width (nominal)	Media diameter: 3.5 in/8.89 cm Physical size: 4 in/10.2 cm
Operating Temperature	41° to 131° F (5° to 55° C)

NOTE: For storage drives, GB = 1 billion bytes. TB = 1 trillion bytes. Actual formatted capacity is less. Up to 36GB (for Windows) is reserved for system recovery software.

2TB 7200RPM 3.5in SATA HDD

Capacity	2TB
Rotational Speed	7,200 rpm
Interface	SATA 6 Gb/s
Buffer Size	128MB
Logical Blocks	3,907,050,336
Seek Time	11 ms (Average)
Height	1.028in/26.11mm
Width (nominal)	Media diameter: 3.5 in/8.89 cm Physical size: 4 in/10.2 cm
Operating Temperature	41° to 131° F (5° to 55° C)

NOTE: For storage drives, GB = 1 billion bytes. TB = 1 trillion bytes. Actual formatted capacity is less. Up to 36GB (for Windows) is reserved for system recovery software.

1TB 7200RPM 2.5in SATA HDD

Capacity	1TB
Rotational Speed	7,200 rpm
Interface	SATA 6 Gb/s
Buffer Size	Up to 128MB
Logical Blocks	1,953,525,168
Seek Time	12 ms (Average)
Height	0.283 in/7.2 mm (Max)
Width (nominal)	2.75 in/70 mm (nominal)
Operating Temperature	41° to 131° F (5° to 55° C)

NOTE: For storage drives, GB = 1 billion bytes. TB = 1 trillion bytes. Actual formatted capacity is less. Up to 36GB (for Windows) is reserved for system recovery software.

256GB M.2 2280 PCIe NVMe SSD

Capacity	256GB
Interface	PCIe NVMe
Minimum Sequential Read	3000 MB/s ±10%
Minimum Sequential Write	1700 MB/s ±10%
Logical Blocks	500,118,192
Features	TRIM; L1.2

NOTE: For storage drives, GB = 1 billion bytes. TB = 1 trillion bytes. Actual formatted capacity is less. Up to 36GB (for Windows) is reserved for system recovery software.
NOTE: PCIe NVME Gen4 based.

512GB M.2 2280 PCIe NVMe SSD

Capacity	512GB
Interface	PCIe NVMe
Minimum Sequential Read	3000 MB/s ±10%
Minimum Sequential Write	1800 MB/s ±10%
Logical Blocks	1,000,215,216
Features	TRIM; L1.2

NOTE: For storage drives, GB = 1 billion bytes. TB = 1 trillion bytes. Actual formatted capacity is less. Up to 36GB (for Windows) is reserved for system recovery software.
NOTE: PCIe NVME Gen4 based.

1TB M.2 2280 PCIe NVMe SSD

Capacity	1TB
Interface	PCIe NVMe
Minimum Sequential Read	3500 MB/s ±10%
Minimum Sequential Write	2500 MB/s ±10%
Logical Blocks	2,000,409,264
Features	TRIM; L1.2

NOTE: For storage drives, GB = 1 billion bytes. TB = 1 trillion bytes. Actual formatted capacity is less. Up to 36GB (for Windows) is reserved for system recovery software.
NOTE: PCIe NVME Gen4 based.

256GB M.2 2280 PCIe NVMe Three Layer Cell SSD

Capacity	256GB
Interface	PCIE Gen4x4
Minimum Sequential Read	4000 MB/s ±10%
Minimum Sequential Write	2000 MB/s ±10%
Logical Blocks	500,118,192
Features	TRIM; L1.2; Pyrite 2.0

NOTE: For storage drives, GB = 1 billion bytes. TB = 1 trillion bytes. Actual formatted capacity is less. Up to 36GB (for Windows) is reserved for system recovery software.

512GB M.2 2280 PCIe NVMe Three Layer Cell SSD

Capacity	512GB
Interface	PCIE Gen4x4
Minimum Sequential Read	6400 MB/s ±10%
Minimum Sequential Write	3500 MB/s ±10%
Logical Blocks	1,000,215,216
Features	TRIM; L1.2; Pyrite 2.0

NOTE: For storage drives, GB = 1 billion bytes. TB = 1 trillion bytes. Actual formatted capacity is less. Up to 36GB (for Windows) is reserved for system recovery software.

1TB M.2 2280 PCIe NVMe Three Layer Cell SSD

Capacity	1TB
Interface	PCIE Gen4x4
Minimum Sequential Read	6400 MB/s ±10%
Minimum Sequential Write	5000 MB/s ±10%
Logical Blocks	2,000,409,264
Features	TRIM; L1.2; Pyrite 2.0

NOTE: For storage drives, GB = 1 billion bytes. TB = 1 trillion bytes. Actual formatted capacity is less. Up to 36GB (for Windows) is reserved for system recovery software.

2TB M.2 2280 PCIe NVMe Three Layer Cell SSD

Capacity	2TB
Interface	PCIE Gen4x4
Minimum Sequential Read	6400 MB/s ±10%
Minimum Sequential Write	5000 MB/s ±10%
Logical Blocks	4,000,797,360
Features	TRIM; L1.2; Pyrite 2.0

NOTE: For storage drives, GB = 1 billion bytes. TB = 1 trillion bytes. Actual formatted capacity is less. Up to 36GB (for Windows) is reserved for system recovery software.

256GB M.2 2280 PCIe NVMe Self Encrypted OPAL2 Value SSD

Capacity	256GB
Interface	PCIE NVMe
Minimum Sequential Read	2000 MB/s ±10%
Minimum Sequential Write	900 MB/s ±10%
Logical Blocks	500,118,192
Features	Pyrite 2.0; TRIM; L1.2

NOTE: For storage drives, GB = 1 billion bytes. TB = 1 trillion bytes. Actual formatted capacity is less. Up to 36GB (for Windows) is reserved for system recovery software.

256GB M.2 2280 PCIe NVMe Self Encrypted OPAL2 Three Layer Cell SSD

Capacity	256GB
Interface	PCIE Gen4x4
Minimum Sequential Read	4000 MB/s ±10%
Minimum Sequential Write	2000 MB/s ±10%
Logical Blocks	500,118,192
Features	TRIM; L1.2; TCG Opal 2.0

NOTE: For storage drives, GB = 1 billion bytes. TB = 1 trillion bytes. Actual formatted capacity is less. Up to 36GB (for Windows) is reserved for system recovery software.

512GB M.2 2280 PCIe NVMe Self Encrypted OPAL2 Three Layer Cell SSD

Capacity	512GB
Interface	PCIE Gen4x4
Minimum Sequential Read	6400 MB/s ±10%
Minimum Sequential Write	3500 MB/s ±10%
Logical Blocks	1,000,215,216
Features	TRIM; L1.2; TCG Opal 2.0

NOTE: For storage drives, GB = 1 billion bytes. TB = 1 trillion bytes. Actual formatted capacity is less. Up to 36GB (for Windows) is reserved for system recovery software.

HP 9.5mm Slim DVD-ROM Drive

Height	9.5 mm height
Orientation	Either horizontal or vertical
Interface type	SATA/ATAPI
Dimensions (W x H x D)	5.04 x 0.37 x 5.0 in (128 x 9.5 x 127 mm) without bezel
Weight (max)	Up to 0.31 lb (140g) without bezel
Read Speeds	DVD+R/-R/+RW/ -RW/+R DL /-R DL Up to 8X DVD-ROM Up to 8X CD-ROM, CD-R Up to 24X CD-RW Up to 24X
Access time (typical reads, including settling)	Random: DVD-ROM: 170 ms (typical), CD-ROM: 170 ms (typical) Full stroke: DVD-ROM: 320 ms (typical), CD-ROM: 320 ms (typical)
Power	Source Slimline SATA DC power receptacle DC Power Requirement 5 VDC ± 5%-100 mV ripple p-p DC Current 5 VDC (< 1000 mA typical, 1600 mA maximum)
Environmental conditions (operating - non-condensing)	Temperature 41° to 122° F (5° to 50° C) Relative Humidity 10% to 80% Maximum Wet Bulb Temperature 84° F (29° C)

Technical Specifications – Storage

HP 9.5mm Slim DVD Writer Drive

Height	9.5 mm height
Orientation	Either horizontal or vertical
Interface type	SATA/ATAPI
Dimensions (W x H x D)	5.04 x 0.37 x 5.0 in (128 x 9.5 x 127 mm) without bezel
Weight (max)	Up to 0.31 lb (140 g) Without bezel
Write Speeds	DVD-R DL - Up to 6X DVD+R - Up to 8X DVD+RW - Up to 8X DVD+R DL - Up to 6X DVD-R - Up to 8X DVD-RW - Up to 6X CD-R - Up to 24X CD-RW - Up to 10X
Read Speeds	DVD-RW, DVD+RW - Up to 8X DVD-R DL, DVD+R DL - Up to 8X DVD+R, DVD-R - Up to 8X DVD-ROM DL, DVD-ROM - Up to 8X CD-ROM, CD-R - Up to 24X CD-RW - Up to 24X
Access time (typical reads, including settling)	Random DVD-ROM: 170 ms (typical), CD-ROM: 170 ms (typical) Full Stroke DVD-ROM: 320 ms (typical), CD-ROM: 320 ms (typical) Stop Time 6 seconds (typical)
Power	Source Slimline SATA DC power receptacle DC Power Requirement 5 VDC ± 5%-100 mV ripple p-p DC Current 5 VDC (< 1000 mA typical, 1600 mA maximum)
Environmental conditions (operating - non-condensing)	Temperature 41° to 122° F (5° to 50° C) Relative Humidity 10% to 80% Maximum Wet Bulb Temperature 84° F (29° C)

NETWORKING AND COMMUNICATIONS

Intel® I219-LM 1 Gigabit Network Connection LOM (vPro®)	
Connector	RJ-45
System Interface	PCI (Intel® proprietary) + SMBus
Data rates supported	10 Mbit/s operation (10BASE-T; IEEE 802.3i; IEEE 802.3 clauses 13-14) 100 Mbit/s operation (100BASE-TX; IEEE 802.3u; IEEE 802.3 clauses 21-30) 1000 Mbit/s operation (1000BASE-T; IEEE 802.3ab; IEEE 8023 clauses 40) Auto-Negotiation (Automatic Speed Selection) Full Duplex Operation at all Speeds, Half Duplex operation at 10 and 100 Mbit/s
IEEE Compliance	IEEE 802.1p QoS (Quality of Service) Support IEEE 802.1q VLAN support IEEE 802.3x Flow Control (IEEE 802.3 clauses 31-32; configurable) IEEE 802.3az EEE (Energy Efficient Ethernet)
Performance	TCP/IP/UDP Checksum Offload (configurable) Protocol Offload (ARP & NS) Large send offload and Giant send offload Receiving Side Scaling (Hash Mode Only) Jumbo Frame 9K
Power consumption	Cable Disconnection: 25mW 100Mbps Full Run: 450mW 1000bp Full Run: 1000mW WoL Enable (S3/S4/S5): 50mW WoL Disable (S3/S4/S5): 25mW
Power Management	ACPI compliant – multiple power modes Situation-sensitive features reduce power consumption Advanced link down power saving for reducing link down power consumption
Management Interface	Auto MDI/MDIX Crossover cable detection
IT Manageability	Wake-on-LAN from modern standby or sleep state (Magic Packet and Microsoft Wake-Up Frame); Wake-on-LAN from off (Magic Packet only), Microsoft Windows Fast Startup must be disabled. PXE 2.1 Remote Boot Statistics Gathering (SNMP MIB II, Ethernet-like MIB, Ethernet MIB (802.3x, clause 30)) Comprehensive diagnostic and configuration software suite Virtual Cable Doctor for Ethernet cable status
Security & Manageability	Intel® vPro® support with appropriate Intel® chipset components

Network Adapter Intel FoxPond1 I225-T1 2.5GbE	
Connector	RJ-45
System Interface	PCI (Intel® proprietary) + SMBus
Data rates supported	1. 10 Mbit/s operation (10BASE-T; IEEE 802.3i; IEEE 802.3 clauses 13-14) 2. 100 Mbit/s operation (100BASE-TX; IEEE 802.3u; IEEE 802.3 clauses 21-30) 3. 1000 Mbit/s operation (1000BASE-T; IEEE 802.3ab; IEEE 802.3 clauses 40) 4. 2.5 Gbit/s operation (2.5GBASE-T; IEEE 802.3bz Clause 126) 5. Auto-Negotiation (Automatic Speed Selection) Full Duplex Operation at all Speeds, Half Duplex operation at 10, 100 & 1000 Mbit/s
IEEE Compliance	IEEE 802.1p QoS (Quality of Service) Support IEEE 802.1q VLAN support IEEE 802.3x Flow Control (IEEE 802.3 clauses 31-32; configurable) IEEE 802.3az EEE (Energy Efficient Ethernet) IEEE 802.3i 10BASE-T IEEE 802.3u 100BASE-TX IEEE 802.3ab 1000BAE-T IEEE 802.3bz 2.5GBASE-T
Performance	TCP/IP/UDP Checksum Offload (configurable) Protocol Offload (ARP & NS) Large send offload and Giant send offload Receiving Side Scaling (Hash Mode Only) Jumbo Frame 9K
Power consumption	Cable Disconnection: 25mW 100Mbps Full Run: 450mW 1000bp Full Run: 1000mW WoL Enable (S3/S4/S5): 50mW WoL Disable (S3/S4/S5): 25mW
Power Management	ACPI compliant – multiple power modes Situation-sensitive features reduce power consumption Advanced link down power saving for reducing link down power consumption
Management Interface	Auto MDI/MDIX Crossover cable detection
IT Manageability	Wake-on-LAN from modern standby or sleep state (Magic Packet and Microsoft Wake-Up Frame); Wake-on-LAN from off (Magic Packet only), Microsoft Windows Fast Startup must be disabled. PXE 2.1 Remote Boot Statistics Gathering (SNMP MIB II, Ethernet-like MIB, Ethernet MIB (802.3x, clause 30)) Comprehensive diagnostic and configuration software suite Virtual Cable Doctor for Ethernet cable status

Intel I226-T1 2.5GbE Ethernet Network Adapter	
Connector	RJ-45
System Interface	PCI (Intel proprietary) + SMBus
Data rates supported	1. 10 Mbit/s operation (10BASE-T; IEEE 802.3i; IEEE 802.3 clauses 13-14) 2. 100 Mbit/s operation (100BASE-TX; IEEE 802.3u; IEEE 802.3 clauses 21-30) 3. 1000 Mbit/s operation (1000BASE-T; IEEE 802.3ab; IEEE 802.3 clauses 40) 4. 2.5 Gbit/s operation (2.5GBASE-T; IEEE 802.3bz Clause 126) 5. Auto-Negotiation (Automatic Speed Selection) Full Duplex Operation at all Speeds, Half Duplex operation at 10 & 100 Mbit/s
IEEE Compliance	IEEE 802.1p QoS (Quality of Service) Support IEEE 802.1q VLAN support IEEE 802.3x Flow Control (IEEE 802.3 clauses 31-32; configurable) IEEE 802.3az EEE (Energy Efficient Ethernet) IEEE 802.3i 10BASE-T IEEE 802.3u 100BASE-TX IEEE 802.3ab 1000BAE-T IEEE 802.3bz 2.5GBASE-T
Performance	TCP/IP/UDP Checksum Offload (configurable) Protocol Offload (ARP & NS) Large send offload and Giant send offload Receiving Side Scaling(Hash Mode Only) Jumbo Frame 9K
Power consumption	Cable Disconnection: 25mW 100Mbps Full Run: 450mW 1000Mbp Full Run: 1000mW 2500Mbp Full Run: 4500mW WoL Enable(S3/S4/S5): 50mW WoL Disable(S3/S4/S5): 25mW
Power	ACPI compliant – multiple power modes
Management	Situation-sensitive features reduce power consumption Advanced link down power saving for reducing link down power consumption
Management Interface	Auto MDI/MDIX Crossover cable detection
IT Manageability	Wake-on-LAN from modern standby or sleep state (Magic Packet and Microsoft Wake-Up Frame); Wake-on-LAN from off (Magic Packet only) PXE 2.1 Remote Boot Statistics Gathering (SNMP MIB II, Ethernet-like MIB, Ethernet MIB (802.3x, clause 30)) Comprehensive diagnostic and configuration software suite Virtual Cable Doctor for Ethernet cable status

Realtek 802.11a/b/g/n/ac (1x1) Wi Fi® and Bluetooth® 4.2 wireless card[1]	
Wireless LAN Standards	IEEE 802.11a IEEE 802.11b IEEE 802.11g IEEE 802.11n IEEE 802.11ac IEEE 802.11d IEEE 802.11e IEEE 802.11h IEEE 802.11i IEEE 802.11k IEEE 802.11r IEEE 802.11v
Interoperability	Wi-Fi® certified modules
Frequency Band	802.11b/g/n • 2.402 – 2.482 GHz 802.11a/n/ac • 4.9 – 4.95 GHz (Japan) • 5.15 – 5.25 GHz • 5.25 – 5.35 GHz • 5.47 – 5.725 GHz • 5.825 – 5.850 GHz
Data Rates	• 802.11b: 1, 2, 5.5, 11 Mbps • 802.11g: 6, 9, 12, 18, 24, 36, 48, 54 Mbps • 802.11a: 6, 9, 12, 18, 24, 36, 48, 54 Mbps • 802.11n: max 150Mbps • 802.11ac: max 433.3Mbps
Modulation	Direct Sequence Spread Spectrum BPSK, QPSK, CCK, 16-QAM, 64-QAM, 256-QAM
Security[2]	• IEEE and Wi-Fi® certified 64 / 128 bit WEP encryption for a/b/g mode only • AES-CCMP: 128 bit in hardware • 802.1x authentication • WPA, WPA2: 802.1x. WPA-PSK, WPA2-PSK, TKIP, and AES. • WPA2 certification • WPA3 certification • IEEE 802.11i • WAPI
Network Architecture Models	Ad-hoc (Peer to Peer) Infrastructure (Access Point Required)
Roaming	IEEE 802.11 compliant roaming between access points
Output Power[3]	• 802.11b: +14dBm minimum • 802.11g: +12dBm minimum • 802.11a: +12dBm minimum • 802.11n HT20(2.4GHz): +12dBm minimum • 802.11n HT40(2.4GHz): +12dBm minimum • 802.11n HT20(5GHz): +10dBm minimum • 802.11n HT40(5GHz): +10dBm minimum • 802.11ac VHT80(5GHz): +10dBm minimum

Technical Specifications – Networking

Power Consumption	• Transmit mode 2.0 W • Receive mode 1.6 W • Idle mode (PSP) 180 mW (WLAN Associated) • Idle mode 50 mW (WLAN unassociated) • Connected Standby 10mW • Radio disabled 8 mW
Power Management	ACPI and PCI Express compliant power management 802.11 compliant power saving mode
Receiver Sensitivity[4]	802.11b, 1Mbps: -93.5dBm maximum 802.11b, 11Mbps: -84dBm maximum 802.11a/g, 6Mbps: -86dBm maximum 802.11a/g, 54Mbps: -72dBm maximum 802.11n, MCS07: -67dBm maximum 802.11n, MCS15: -64dBm maximum 802.11ac, MCS0: -84dBm maximum 802.11ac, MCS9: -59dBm maximum
Antenna type	High efficiency antenna. One embedded dual band 2.4/5 GHz antenna is provided to the card to support WLAN communications and Bluetooth communications
Form Factor	PCI-Express M.2 MiniCard
Dimensions	Type 2230: 2.3 x 22.0 x 30.0 mm
Weight	Type 2230: 2.8g
Operating Voltage	3.3v +/- 9%
Temperature	Operating: 14° to 158° F (–10° to 70° C) Non-operating: –40° to 176° F (–40° to 80° C)
Humidity	Operating: 10% to 90% (non-condensing) Non-operating: 5% to 95% (non-condensing)
Altitude	Operating: 0 to 10,000 ft (3,048 m) Non-operating: 0 to 50,000 ft (15,240 m)
LED Activity	LED Amber – Radio OFF; LED OFF – Radio ON
HP Integrated Module with Bluetooth® 4.0/4.1/4.2 wireless card Technology	
Bluetooth® Specification	4.0/4.1/4.2 wireless card Compliant
Frequency Band	2402 to 2480 MHz
Number of Available Channels	Legacy: 0~79 (1 MHz/CH) BLE: 0~39 (2 MHz/CH)
Data Rates and Throughput	Legacy: 3 Mbps data rate; throughput up to 2.17 Mbps BLE: 1 Mbps data rate; throughput up to 0.2 Mbps Legacy: Synchronous Connection Oriented links up to 3, 64 kbps, voice channels Legacy: Asynchronous Connection Less links 2178.1 kbps/177.1 kbps asymmetric (3-DH5) or 864 kbps symmetric (3-EV5)
	The Bluetooth component shall operate as a Class II Bluetooth device with a maximum transmit power of + 4 dBm for BR and EDR.
	Peak (Tx) 330 mW Peak (Rx) 230 mW Selective Suspend 17 mW
Transmit Power	USB 2.0 compliant

Technical Specifications – Networking

Power Consumption	Microsoft Windows Bluetooth Software
Bluetooth® Software Supported Link Topology	Microsoft Windows ACPI, and USB Bus Support
Power Management	FCC (47 CFR) Part 15C, Section 15.247 & 15.249
Certifications	4.0/4.1/4.2 Compliant
Power Management **Certifications**	ETS 300 328, ETS 300 826 Low Voltage Directive IEC950 UL, CSA, and CE Mark
Bluetooth® Profiles Supported	BT4.1-ESR 5/6/7 Compliance LE Link Layer Ping LE Dual Mode LE Link Layer LE Low Duty Cycle Directed Advertising LE L2CAP Connection Oriented Channels Train Nudging & Interlaced Scan BT4.2 ESR08 Compliance LE Secure Connection- Basic/Full LE Privacy 1.2 –Link Layer Privacy LE Privacy 1.2 –Extended Scanner Filter Policies LE Data Packet Length Extension FAX Profile (FAX) Basic Imaging Profile (BIP)2 Headset Profile (HSP) Hands Free Profile (HFP) Advanced Audio Distribution Profile (A2DP)

1. Wi-Fi 5 is designed to support gigabit data rate when transferring files between two devices connected to the same router. Requires a wireless router, sold separately, that supports 80MHz and higher channels. Wireless access point and internet service required and sold separately. Availability of public wireless access points limited. Wi-Fi 5 (802.11 ac) is backwards compatible with prior 802.11 specs.
2. Check latest software/driver release for updates on supported security features.
3. The FCC has declared as of September 1, 2014 products that utilize passive scanning on channel 12/13 and are capable of transmitting must fully comply with requirements of 15.247 or otherwise disable those channels.
4. Receiver sensitivity is measured at a packet error rate of 8% for 802.11b (CKK modulation) and a packet error rate of 10% for 802.11a/g (OFDM modulation).

Realtek RTL8852BE 802.11ax 2x2 Wi-Fi® + Bluetooth® 5.3 wireless card (802.11ax 2x2, supporting gigabit data rate)[1]	
Wireless LAN Standards	IEEE 802.11a IEEE 802.11b IEEE 802.11g IEEE 802.11n IEEE 802.11ac IEEE 802.11ax IEEE 802.11d IEEE 802.11e IEEE 802.11h IEEE 802.11i IEEE 802.11k IEEE 802.11r IEEE 802.11v
Interoperability	Wi-Fi® certified modules
Frequency Band	802.11b/g/n/ax • 2.402 – 2.482 GHz 802.11a/n/ac/ax • 4.9 – 4.95 GHz (Japan) • 5.15 – 5.25 GHz • 5.25 – 5.35 GHz • 5.47 – 5.725 GHz • 5.825 – 5.850 GHz
Data Rates	• 802.11b: 1, 2, 5.5, 11 Mbps • 802.11g: 6, 9, 12, 18, 24, 36, 48, 54 Mbps • 802.11a: 6, 9, 12, 18, 24, 36, 48, 54 Mbps • 802.11n: max 300Mbps • 802.11ac: max 866.7Mbps • 802.11ax: max 1201Mbps
Modulation	Direct Sequence Spread Spectrum BPSK, QPSK, CCK, 16-QAM, 64-QAM, 256-QAM, 1024QAM
Security[2]	• IEEE and Wi-Fi® certified 64 / 128 bit WEP encryption for a/b/g mode only • AES-CCMP: 128 bit in hardware • 802.1x authentication • WPA, WPA2: 802.1x. WPA-PSK, WPA2-PSK, TKIP, and AES. • WPA2 certification • WPA3 certification • IEEE 802.11i • WAPI
Network Architecture Models	Ad-hoc (Peer to Peer) Infrastructure (Access Point Required)
Roaming	IEEE 802.11 compliant roaming between access points
Output Power[3]	• 802.11b: +18.5dBm minimum • 802.11g: +17.5dBm minimum • 802.11a: +18.5dBm minimum • 802.11n HT20(2.4GHz): +15.5dBm minimum • 802.11n HT40(2.4GHz): +14.5dBm minimum • 802.11n HT20(5GHz): +15.5dBm minimum • 802.11n HT40(5GHz): +14.5dBm minimum • 802.11ac VHT80(5GHz): +11.5dBm minimum

	• 802.11ax HE40(2.4GHz): +10dBm minimum • 802.11ax HE80(5GHz): +10dBm minimum
Power Consumption	• Transmit mode:2.5 W • Receive mode:2 W • Idle mode (PSP): 180 mW (WLAN Associated) • Idle mode:50 mW (WLAN unassociated) • Connected Standby/Modern Standby: 10mW • Radio disabled: 8 mW
Power Management	ACPI and PCI Express compliant power management 802.11 compliant power saving mode
Receiver Sensitivity[4]	802.11b, 1Mbps: -93.5dBm maximum 802.11b, 11Mbps: -84dBm maximum 802.11a/g, 6Mbps: -86dBm maximum 802.11a/g, 54Mbps: -72dBm maximum 802.11n, MCS07: -67dBm maximum 802.11n, MCS15: -64dBm maximum 802.11ac, MCS0: -84dBm maximum 802.11ac, MCS9: -59dBm maximum •802.11ax, MCS11(HE40): -57dBm maximum •802.11ax, MCS11(HE80): -54dBm maximum
Antenna type	High efficiency antenna with spatial diversity, mounted in the display enclosure Two embedded dual band 2.4/5 GHz antennas are provided to the card to support WLAN MIMO communications and Bluetooth communications
Form Factor	PCI-Express M.2 MiniCard
Dimensions	1. Type 2230: 2.3 x 22.0 x 30.0 mm 2. Type 1216: 1.67 x 12.0 x 16.0 mm
Weight	1. Type 2230: 2.8g 2. Type 126: 1.3g
Operating Voltage	3.3v +/- 9%
Temperature	Operating: 14° to 158° F (–10° to 70° C) Non-operating: –40° to 176° F (–40° to 80° C)
Humidity	Operating: 10% to 90% (non-condensing) Non-operating: 5% to 95% (non-condensing)
Altitude	Operating: 0 to 10,000 ft (3,048 m) Non-operating: 0 to 50,000 ft (15,240 m)
LED Activity	LED Amber – Radio OFF; LED OFF – Radio ON
HP Integrated Module with Bluetooth® 4.0/4.1/4.2/5.0/5.1/5.2/5.3 wireless card Technology	
Bluetooth® Specification	4.0/4.1/4.2/5.0/5.1/5.2 /5.3 wireless card Compliant
Frequency Band	2402 to 2480 MHz
Number of Available Channels	Legacy: 0~79 (1 MHz/CH) BLE: 0~39 (2 MHz/CH)
Data Rates and Throughput	Legacy: 3 Mbps data rate; throughput up to 2.17 Mbps BLE: 1 Mbps data rate; throughput up to 0.2 Mbps Legacy: Synchronous Connection Oriented links up to 3, 64 kbps, voice channels Legacy: Asynchronous Connection Less links 2178.1 kbps/177.1 kbps asymmetric (3-DH5) or 864 kbps symmetric (3-EV5)

Technical Specifications – Networking

Transmit Power	The Bluetooth component shall operate as a Class II Bluetooth device with a maximum transmit power of + 4 dBm for BR and EDR.
Power Consumption	Peak (Tx): 330 mW Peak (Rx): 230 mW Selective Suspend: 17 mW
Electrical Interface	Microsoft Windows Bluetooth Software
Bluetooth® Software Supported Link Topology	Microsoft Windows ACPI, and USB Bus Support
Power Management	FCC (47 CFR) Part 15C, Section 15.247 & 15.249
Certifications	ETS 300 328, ETS 300 826 Low Voltage Directive IEC950 UL, CSA, and CE Mark Peak (Tx): 330 mW Peak (Rx): 230 mW Selective Suspend: 17 mW
Power Management Certifications	Microsoft Windows Bluetooth Software
Bluetooth® Profiles Supported	BT4.1-ESR 5/6/7 Compliance LE Link Layer Ping LE Dual Mode LE Link Layer LE Low Duty Cycle Directed Advertising LE L2CAP Connection Oriented Channels Train Nudging & Interlaced Scan BT4.2 ESR08 Compliance LE Secure Connection- Basic/Full LE Privacy 1.2 –Link Layer Privacy LE Privacy 1.2 –Extended Scanner Filter Policies LE Data Packet Length Extension FAX Profile (FAX) Basic Imaging Profile (BIP)2 Headset Profile (HSP) Hands Free Profile (HFP) Advanced Audio Distribution Profile (A2DP) BT5.1 ESR9/10 Compliance LE Advertisement Extensions Channel Selection Algo Limited High Duty Cycle Non-Connectable Advertising 2Mbps LE LE Long Range

1. Wi-Fi 6 is designed to support gigabit data rate when transferring files between two devices connected to the same router. Requires a wireless router, sold separately, that supports 80MHz and higher channels.
2. Check latest software/driver release for updates on supported security features.
3. The FCC has declared as of September 1, 2014 products that utilize passive scanning on channel 12/13 and are capable of transmitting must fully comply with requirements of 15.247 or otherwise disable those channels.
4. Receiver sensitivity is measured at a packet error rate of 8% for 802.11b (CKK modulation) and a packet error rate of 10% for 802.11a/g (OFDM modulation).

Intel® AX211 Wi-Fi 6E +Bluetooth® 5.3 wireless card M.2 160MHz CNVi WW WLAN[1]	
Wireless LAN Standards	IEEE 802.11a IEEE 802.11b IEEE 802.11g IEEE 802.11n IEEE 802.11ac IEEE 802.11ax IEEE 802.11d IEEE 802.11e IEEE 802.11h IEEE 802.11i IEEE 802.11k IEEE 802.11r IEEE 802.11v
Interoperability	Wi-Fi® certified
Frequency Band	802.11b/g/n/ax • 2.402 – 2.482 GHz 802.11a/n/ac/ax • 4.9 – 4.95 GHz (Japan) • 5.15 – 5.25 GHz • 5.25 – 5.35 GHz • 5.47 – 5.725 GHz • 5.825 – 5.850 GHz • 5.955 – 6.415 GHz • 6.435 – 6.515 GHz • 6.535 – 6.875 GHz • 6.895 – 7.115 GHz
Data Rates	• 802.11b: 1, 2, 5.5, 11 Mbps • 802.11g: 6, 9, 12, 18, 24, 36, 48, 54 Mbps • 802.11a: 6, 9, 12, 18, 24, 36, 48, 54 Mbps • 802.11n: max 300Mbps • 802.11ac: 1733Mbps • 802.11ax: max 2.4Gbps
Modulation	Direct Sequence Spread Spectrum OFDM, BPSK, QPSK, CCK, 16-QAM, 64-QAM, 256-QAM , 1024QAM
Security[2]	• IEEE and Wi-Fi® compliant 64 / 128 bit WEP encryption for a/b/g mode only • AES-CCMP: 128 bit in hardware • 802.1x authentication • WPA, WPA2: 802.1x. WPA-PSK, WPA2-PSK, TKIP, and AES. • WPA2 certification • WPA3 certification • IEEE 802.11i • WAPI
Network Architecture Models	Ad-hoc (Peer to Peer) Infrastructure (Access Point Required)
Roaming	IEEE 802.11 compliant roaming between access points
Output Power[3]	• 802.11b: +17dBm minimum • 802.11g: +16dBm minimum • 802.11a: +17dBm minimum • 802.11n HT20(2.4GHz): +14dBm minimum

	• 802.11n HT40(2.4GHz): +13dBm minimum • 802.11n HT20(5GHz): +14dBm minimum • 802.11n HT40(5GHz): +13dBm minimum • 802.11ac VHT80(5GHz): +10dBm minimum • 802.11ac VHT160(5GHz): +10dBm minimum • 802.11ax HE40(2.4GHz): +12dBm minimum • 802.11ax HE80(5GHz): +10dBm minimum • 802.11ax HE160(5GHz): +10dBm minimum
Power Consumption	• Transmit mode 2.0 W • Receive mode 1.6 W • Idle mode (PSP) 180 mW (WLAN Associated) • Idle mode 50 mW (WLAN unassociated) • Connected Standby 10mW • Radio disabled 8 mW
Power Management	ACPI and PCI Express compliant power management 802.11 compliant power saving mode
Receiver Sensitivity[4]	•802.11b, 1Mbps: -93.5dBm maximum •802.11b, 11Mbps: -84dBm maximum • 802.11a/g, 6Mbps: -86dBm maximum • 802.11a/g, 54Mbps: -72dBm maximum • 802.11n, MCS07: -67dBm maximum • 802.11n, MCS15: -64dBm maximum • 802.11ac, MCS0(VHT80): -84dBm maximum • 802.11ac, MCS9(VHT80): -59dBm maximum • 802.11ac, MCS9(VHT160): -58.5dBm maximum •802.11ax, MCS11(HE40): -57dBm maximum •802.11ax, MCS11(HE80): -54dBm maximum •802.11ax, MCS11(HE160): -53.5dBm maximum
Antenna type	High efficiency antenna with spatial diversity, mounted in the display enclosure Two embedded dual band 2.4/5/6 GHz antennas are provided to the card to support WLAN MIMO communications and Bluetooth communications
Form Factor	PCI-Express M.2 MiniCard
Dimensions	1. Type 2230: 2.3 x 22.0 x 30.0 mm 2. Type 1216: 1.67 x 12.0 x 16.0 mm
Weight	1. Type 2230: 2.8g 2. Type 1216: 1.3g
Operating Voltage	3.3v +/- 9%
Temperature	Operating: 14° to 158° F (–10° to 70° C) Non-operating: –40° to 176° F (–40° to 80° C)
Humidity	Operating: 10% to 90% (non-condensing) Non-operating: 5% to 95% (non-condensing)
Altitude	Operating: 0 to 10,000 ft (3,048 m) Non-operating: 0 to 50,000 ft (15,240 m)
LED Activity	LED Amber – Radio OFF; LED OFF – Radio ON
HP Integrated Module with Bluetooth® 4.0/4.1/4.2/5.0/5.1/5.2/5.3 wireless card Technology	
Bluetooth® Specification	4.0/4.1/4.2/5.0/5.1/5.2 5.3 wireless card Compliant
Frequency Band	2402 to 2480 MHz
Number of Available Channels	Legacy: 0~79 (1 MHz/CH) BLE: 0~39 (2 MHz/CH)
Data Rates and Throughput	Legacy: 3 Mbps data rate; throughput up to 2.17 Mbps BLE: 1 Mbps data rate; throughput up to 0.2 Mbps

Technical Specifications – Networking

	Legacy: Synchronous Connection Oriented links up to 3, 64 kbps, voice channels Legacy: Asynchronous Connection Less links 2178.1 kbps/177.1 kbps asymmetric (3-DH5) or 864 kbps symmetric (3-EV5)
Transmit Power	The Bluetooth component shall operate as a Class II Bluetooth device with a maximum transmit power of + 9.5 dBm for BR and EDR.
Power Consumption	Peak (Tx): 330 mW Peak (Rx): 230 mW Selective Suspend: 17 mW
Bluetooth® Software Supported Link Topology	Microsoft Windows Bluetooth Software
Power Management	Microsoft Windows ACPI, and USB Bus Support
Certifications	FCC (47 CFR) Part 15C, Section 15.247 & 15.249
Power Management Certifications	ETS 300 328, ETS 300 826 Low Voltage Directive IEC950 UL, CSA, and CE Mark
Bluetooth® Profiles Supported	BT4.1-ESR 5/6/7 Compliance LE Link Layer Ping LE Dual Mode LE Link Layer LE Low Duty Cycle Directed Advertising LE L2CAP Connection Oriented Channels Train Nudging & Interlaced Scan BT4.2 ESR08 Compliance LE Secure Connection- Basic/Full LE Privacy 1.2 –Link Layer Privacy LE Privacy 1.2 –Extended Scanner Filter Policies LE Data Packet Length Extension FAX Profile (FAX) Basic Imaging Profile (BIP)2 Headset Profile (HSP) Hands Free Profile (HFP) Advanced Audio Distribution Profile (A2DP) BT5.2 ESR9/10 Compliance LE Advertisement Extensions Channel Selection Algo Limited High Duty Cycle Non-Connectable Advertising 2Mbps LE LE Long Range

1. Wi-Fi 6E requires a Wi-Fi 6E router, sold separately, to function in the 6GHz band. Availability of public wireless access points limited. Wi-Fi 6E is backwards compatible with prior 802.11 specs. And available in countries where Wi-Fi 6E is supported. Wi-Fi 6E is designed to support gigabit data rate when transferring files between two devices connected to the same router. Requires a wireless router, sold separately, that supports 80MHz and higher channels.
2. Check latest software/driver release for updates on supported security features.
3. The FCC has declared as of September 1, 2014 products that utilize passive scanning on channel 12/13 and are capable of transmitting must fully comply with requirements of 15.247 or otherwise disable those channels.
4. Receiver sensitivity is measured at a packet error rate of 8% for 802.11b (CKK modulation) and a packet error rate of 10% for 802.11a/g (OFDM modulation).
5. Usage of the 6GHz band relies on Windows 11 Operating System support.

Technical Specifications – Networking

Intel® AX211 Wi-Fi 6E + Bluetooth® 5.3 wireless card M.2 vPro® 160MHz CNVi WW WLAN[1]	
Wireless LAN Standards	IEEE 802.11a IEEE 802.11b IEEE 802.11g IEEE 802.11n IEEE 802.11ac IEEE 802.11ax IEEE 802.11d IEEE 802.11e IEEE 802.11h IEEE 802.11i IEEE 802.11k IEEE 802.11r IEEE 802.11v
Interoperability	Wi-Fi certified
Frequency Band	802.11b/g/n/ax • 2.402 – 2.482 GHz 802.11a/n/ac/ax • 4.9 – 4.95 GHz (Japan) • 5.15 – 5.25 GHz • 5.25 – 5.35 GHz • 5.47 – 5.725 GHz • 5.825 – 5.850 GHz • 5.955 – 6.415 GHz • 6.435 – 6.515 GHz • 6.535 – 6.875 GHz • 6.895 – 7.115 GHz
Data Rates	• 802.11b: 1, 2, 5.5, 11 Mbps • 802.11g: 6, 9, 12, 18, 24, 36, 48, 54 Mbps • 802.11a: 6, 9, 12, 18, 24, 36, 48, 54 Mbps • 802.11n: max 300Mbps • 802.11ac: 1733Mbps • 802.11ax: max 2.4Gbps
Modulation	Direct Sequence Spread Spectrum OFDM, BPSK, QPSK, CCK, 16-QAM, 64-QAM, 256-QAM , 1024QAM
Security[2]	• IEEE and WiFi compliant 64 / 128 bit WEP encryption for a/b/g mode only • AES-CCMP: 128 bit in hardware • 802.1x authentication • WPA, WPA2: 802.1x. WPA-PSK, WPA2-PSK, TKIP, and AES. • WPA2 certification • WPA3 certification • IEEE 802.11i • WAPI
Network Architecture Models	Ad-hoc (Peer to Peer) Infrastructure (Access Point Required)
Roaming	IEEE 802.11 compliant roaming between access points
Output Power[3]	• 802.11b: +17dBm minimum • 802.11g: +16dBm minimum • 802.11a: +17dBm minimum • 802.11n HT20(2.4GHz): +14dBm minimum • 802.11n HT40(2.4GHz): +13dBm minimum • 802.11n HT20(5GHz): +14dBm minimum • 802.11n HT40(5GHz): +13dBm minimum

Technical Specifications – Networking

	• 802.11ac VHT80(5GHz): +10dBm minimum • 802.11ac VHT160(5GHz): +10dBm minimum • 802.11ax HE40(2.4GHz): +12dBm minimum • 802.11ax HE80(5GHz): +10dBm minimum • 802.11ax HE160(5GHz): +10dBm minimum
Power Consumption	• Transmit mode 2.0 W • Receive mode 1.6 W • Idle mode (PSP) 180 mW (WLAN Associated) • Idle mode 50 mW (WLAN unassociated) • Connected Standby 10mW • Radio disabled 8 mW
Power Management	ACPI and PCI Express compliant power management 802.11 compliant power saving mode
Receiver Sensitivity[4]	•802.11b, 1Mbps: -93.5dBm maximum •802.11b, 11Mbps: -84dBm maximum • 802.11a/g, 6Mbps: -86dBm maximum • 802.11a/g, 54Mbps: -72dBm maximum • 802.11n, MCS07: -67dBm maximum • 802.11n, MCS15: -64dBm maximum • 802.11ac, MCS0(VHT80): -84dBm maximum • 802.11ac, MCS9(VHT80): -59dBm maximum • 802.11ac, MCS9(VHT160): -58.5dBm maximum •802.11ax, MCS11(HE40): -57dBm maximum •802.11ax, MCS11(HE80): -54dBm maximum •802.11ax, MCS11(HE160): -53.5dBm maximum
Antenna type	High efficiency antenna with spatial diversity, mounted in the display enclosure Two embedded dual band 2.4/5/6 GHz antennas are provided to the card to support WLAN MIMO communications and Bluetooth communications
Form Factor	PCI-Express M.2 MiniCard
Dimensions	1. Type 2230: 2.3 x 22.0 x 30.0 mm 2. Type 1216: 1.67 x 12.0 x 16.0 mm
Weight	1. Type 2230: 2.8g 2. Type 1216: 1.3g
Operating Voltage	3.3v +/- 9%
Temperature	Operating: 14° to 158° F (–10° to 70° C) Non-operating: –40° to 176° F (–40° to 80° C)
Humidity	Operating: 10% to 90% (non-condensing) Non-operating: 5% to 95% (non-condensing)
Altitude	Operating: 0 to 10,000 ft (3,048 m) Non-operating: 0 to 50,000 ft (15,240 m)
LED Activity	LED Amber – Radio OFF; LED OFF – Radio ON
HP Integrated Module with Bluetooth® 4.0/4.1/4.2/5.0/5.1/5.2 /5.3 wireless card Technology	
Bluetooth® Specification	4.0/4.1/4.2/5.0/5.1/5.2/5.3 wireless card Compliant
Frequency Band	2402 to 2480 MHz
Number of Available Channels	Legacy: 0~79 (1 MHz/CH) BLE: 0~39 (2 MHz/CH)
Data Rates and Throughput	Legacy: 3 Mbps data rate; throughput up to 2.17 Mbps BLE: 1 Mbps data rate; throughput up to 0.2 Mbps Legacy: Synchronous Connection Oriented links up to 3, 64 kbps, voice channels Legacy: Asynchronous Connection Less links 2178.1 kbps/177.1 kbps asymmetric (3-DH5) or 864 kbps symmetric (3-EV5)

Technical Specifications – Networking

Transmit Power	The Bluetooth component shall operate as a Class II Bluetooth device with a maximum transmit power of + 9.5 dBm for BR and EDR.
Power Consumption	Peak (Tx): 330 mW Peak (Rx): 230 mW Selective Suspend: 17 mW
Bluetooth® Software Supported Link Topology	Microsoft Windows Bluetooth Software
Power Management	Microsoft Windows ACPI, and USB Bus Support
Certifications	FCC (47 CFR) Part 15C, Section 15.247 & 15.249
Power Management Certifications	ETS 300 328, ETS 300 826 Low Voltage Directive IEC950 UL, CSA, and CE Mark
Bluetooth® Profiles Supported	BT4.1-ESR 5/6/7 Compliance LE Link Layer Ping LE Dual Mode LE Link Layer LE Low Duty Cycle Directed Advertising LE L2CAP Connection Oriented Channels Train Nudging & Interlaced Scan BT4.2 ESR08 Compliance LE Secure Connection- Basic/Full LE Privacy 1.2 –Link Layer Privacy LE Privacy 1.2 –Extended Scanner Filter Policies LE Data Packet Length Extension FAX Profile (FAX) Basic Imaging Profile (BIP)2 Headset Profile (HSP) Hands Free Profile (HFP) Advanced Audio Distribution Profile (A2DP) BT5.2 ESR9/10 Compliance LE Advertisement Extensions Channel Selection Algo Limited High Duty Cycle Non-Connectable Advertising 2Mbps LE LE Long Range

1. Wi-Fi 6E requires a Wi-Fi 6E router, sold separately, to function in the 6GHz band. Availability of public wireless access points limited. Wi-Fi 6E is backwards compatible with prior 802.11 specs. And available in countries where Wi-Fi 6E is supported. Wi-Fi 6E is designed to support gigabit data rate when transferring files between two devices connected to the same router. Requires a wireless router, sold separately, that supports 80MHz and higher channels.
2. Check latest software/driver release for updates on supported security features.
3. The FCC has declared as of September 1, 2014 products that utilize passive scanning on channel 12/13 and are capable of transmitting must fully comply with requirements of 15.247 or otherwise disable those channels.
4. Receiver sensitivity is measured at a packet error rate of 8% for 802.11b (CKK modulation) and a packet error rate of 10% for 802.11a/g (OFDM modulation).
5. Usage of the 6GHz band relies on Windows 11 Operating System support.

I/O DEVICES

HP Business Slim Standalone USB/PS2 Wired Keyboard		
Physical Characteristics	Keys	104, 105, 106, 107, 109 layout (depending upon country)
	Dimensions (L x W x H)	171.97 x 68.35 x 8.27 in (436.8± 1.5 x 137.6± 1.0 x 21.0± 1.0 cm)
	Weight	1.32 lb (0.6± 0.08 kg)
Electrical	Operating voltage	4.4-5.25VDC
	Power consumption	50-mA maximum (with 5 VDC power supplied and three LEDs ON)/
	System interface	USB or PS/2
	ESD	Contact Discharge: 2, 4,6,8KV Air Discharge: 2, 4, 8,10,12.5KV
	EMI – RFI	Conforms to FCC rules for a Class B computing device
Mechanical	Keycaps	Low-profile design
	Switch actuation	60±12.5g nominal peak force with tactile feedback
	Switch life	10 million keystrokes (Life tester)
	Switch type	Contamination-resistant switch membrane
	Key-leveling mechanisms	For all double-wide and greater-length keys
	Cable length	6 ft (1.8 m)
Environmental	Acoustics	43-dBA maximum sound pressure level
	Operating temperature	50° to 122° F (10° to 50° C)
	Non-operating temperature	Minus 30 degress to 60 degress Celsius
	Operating humidity	10% to 90% (non-condensing at ambient)
	Non-operating humidity	20% to 80% (non-condensing at ambient)
	Operating shock	40 g, six surfaces
	Non-operating shock	80 g, six surfaces
	Operating vibration	2-g peak acceleration
	Non-operating vibration	4-g peak acceleration
	Drop (out of box)	26 in (66 cm) on carpet, six-drop sequence
	Drop (in box)	30 in (76.2 cm) on concrete, 16-drop sequence
Approvals	UL, FCC, CE Mark, TUV GS, VCCI, BSMI, RCM, KCC	
Ergonomic compliance	ANSI HFS 100, ISO 9241-4, and TUVGS	

Technical Specifications – Input/Output Devices

HP USB Business Slim Wired SmartCard CCID Keyboard		
Physical Characteristics	Keys	104, 105, 107, 109 layout (depending upon country)
	Dimensions (L x W x H)	17.34 x 5.68 x 0.78in (440.6 x 144.5 x 1.98 cm)
	Weight	1.32 lb (598g)
Electrical	Operating voltage	5 VDC, +/-5%
	Power consumption	100mA (All LED on)
	System interface	USB Type A plug connector
	ESD	Contact Discharge: 8 KV Air Discharge: 12.5 KV
	EMI - RFI	Conforms to FCC rules for a Class B computing device
Mechanical	Keycaps	Low-profile design
	Switch actuation	60±10g nominal peak force with tactile feedback
	Switch life	10 million keystrokes (Life tester)
	Switch type	Contamination-resistant switch membrane
	Key-leveling mechanisms	For all double-wide and greater-length keys
	Cable length	6 ft (1.8 m)
Environmental	Acoustics	43-dBA maximum sound pressure level
	Operating temperature	50° to 122° F (10° to 50° C)
	Non-operating temperature	-22° to 140° F (-30° to 60° C)
	Operating humidity	10% to 90% (non-condensing at ambient)
	Non-operating humidity	20% to 80% (non-condensing at ambient)
	Operating shock	40 g, six surfaces
	Non-operating shock	80 g, six surfaces
	Operating vibration	2-g peak acceleration
	Non-operating vibration	4-g peak acceleration
	Drop (out of box)	26 in (66 cm) on carpet, six-drop sequence
	Drop (in box)	30 in (76.2 cm) on concrete, 16-drop sequence
Approvals	CE Marking, TUV, EAC, FCC, cULus/CSAus, ICES, RCM, VCCI, KCC, BSMI	
Ergonomic compliance	ISO 9241-4, TUVGS	

Technical Specifications – Input/Output Devices

HP 125 (AntiMicrobial) Wired Keyboard (China only)		
Physical Characteristics	Keys	104/105/107/109layout (depending upon country)
	Dimensions (L x W x H)	436 x 138 x24.7 mm
	Weight	471g
Electrical	Operating voltage	5V +- 5%
	Power consumption	50mA
	System interface	USB Type A plug connector
	ESD	Contact Discharge: 8 KV Air Discharge: 12.5 KV
	EMI - RFI	Conforms to FCC rules for a Class B computing device
Mechanical	Keycaps	Low-profile design
	Switch actuation	55±10g nominal peak force with tactile feedback
	Switch life	10 million keystrokes (Life tester)
	Switch type	Contamination-resistant switch membrane
	Key-leveling mechanisms	For all double-wide and greater-length keys
	Cable length	1.8 m
Environmental	Acoustics	43-dBA maximum sound pressure level
	Operating temperature	50° to 122° F (10° to 50° C)
	Non-operating temperature	-4° to 149° F (-20° to 65° C)
	Operating humidity	10% to 95% (non-condensing at ambient)
	Non-operating humidity	0% to 95% (non-condensing at ambient)
	Operating shock	40 g, six surfaces
	Non-operating shock	80 g, six surfaces
	Operating vibration	2-g peak acceleration
	Non-operating vibration	4-g peak acceleration
	Drop (out of box)	26 in (66 cm) on carpet, six-drop sequence
	Drop (in box)	30 in (76.2 cm) on concrete, 16-drop sequence
Approvals	UL, cUL, FCC, CE, TUV GS, VCCI, BSMI, RCM, KCC, USB-IF, WHQL, EN/IEC 60601-1	
Ergonomic compliance	ANSI HFS 100, ISO 9241-4, and TUVGS	

Technical Specifications – Input/Output Devices

HP 655 wireless Keyboard		
Physical Characteristics	Keys	104, 105, 107,109 layouts
	Dimensions (L x W x H)	16.86 x 4.55 x 0.71 in (428.22 x 115.47 x 18.06 mm)
	Weight	0.96 lb (435g)
Electrical	Operating voltage	3 VDC, +/-5%
	Power consumption	20 mA Max (All LED on)
	System interface	2.4GHz Wireless
	ESD	Contact Discharge: 8 KV Air Discharge: 15 KV
	EMI - RFI	Conforms to FCC rules for a Class B computing device
Mechanical	Keycaps	Plunger, 2.0 mm key travel
	Key actuation	60±10g nominal peak force with tactile feedback
	Key life	10 million keystrokes (Life tester)
	Key structure type	Rubber dome & Membrane
	Key-leveling mechanisms	For all double-wide and greater-length keys
Environmental	Operating temperature	50° to 122° F (10° to 50° C)
	Non-operating temperature	-22° to 140° F (-30° to 60° C)
	Operating humidity	10% to 90% (non-condensing at ambient)
	Non-operating humidity	20% to 80% (non-condensing at ambient)
	Operating shock	40 g, six surfaces
	Non-operating shock	80 g, six surfaces
	Operating vibration	2-g peak acceleration
	Non-operating vibration	4-g peak acceleration
	Drop (out of box)	26 in (66 cm) on carpet, six-drop sequence
	Drop (in box)	30 in (76.2 cm) on concrete, 16-drop sequence
Approvals	CB, CE, FCC, cULus, ICES, IC, I TRC, TRA, CASA, UA, EAC, CNC, ANATEL, NOM-NYCE SCT, IFETEL, MPTC, RCM, BIS, PosTel, VCCI, TELEC, KC, MCMC, IDA, BSMI, NCC, DWLF&M, TP-BY, MOC	
Ergonomic compliance	TUVGS	

Technical Specifications – Input/Output Devices

HP Wired Desktop 320K Keyboard				
Physical Characteristics	Keys	104, 105, 107,109 layouts		
	Dimensions(L x W x H)	18.86*4.55*0.66 in (426.2 x 110.9 x 16.7 mm)		
	Weight	1.00 lb(452g)		
Electrical	Operating voltage	5 VDC, +/-5%		
	Power consumption	50 mA Max (All LED on)		
	System interface	USB Port		
	ESD	Contact Discharge: 8 KV Air Discharge: 15 KV (Class B)		
	EMI - RFI	European Standard EN 55022: 2006+A1: 2007, Class B. FCC/CFR 47 : Part 15 Class B		
Mechanical	Keycaps	2.0mm +/-0.2mm at 120gf Key travel		
Environmental	Operating temperature	10° C to 90° C		
	Non-operating temperature	-30° C to 95° C		
	Operating humidity	N/A		
	Non-operating humidity	10% to 90% (non-condensing at ambient)		
	Operating shock	N/A		
	Non-operating shock	i. Half-Sine Shock – End-Use Handling, Non-Operational Sample size: 5pcs. Condition: Sample power off. Axis: X, Y, Z axis (all 6 faces) – sample normal mode of operation. Number of shocks: 1 shock/face. Pulse duration: < 3 ms Velocity change: 50lps (inch-per-second)- 65lps desired. ii. Trapezoidal Shock- Transportation Environment, Non-Operational Sample size: 5pcs. Condition: Sample power off. Orientation: All six faces: Front, Rear, Left, Right, Bottom, and Top. Configuration: As intended for shipment Number of shocks: 1 shock/face. Minimum faired acceleration: 30G's. Test also at 40 and 50G's to find margin. Velocity change: 266lps (inch-per-second) for product mass (m) 20<m<40lb.		
	Operating vibration	**Frequency (Hz)**	**Slope (dB/oct)**	**PSD (g^2/Hz)**
		5-350	0	0.0001
		350-500	-6	-
		500	-	0.00005
		($\sim$0.21G_{nms})		
		Total Test time: 10 minutes		
	Non-operating vibration	**Frequency (Hz)**	**Slope (dB/oct)**	**PSD (g^2/Hz)**

		5.100	0	0.015
		100-137	-6	-
		137-350	0	0.008
		350-500	-6	-
		500	-	0.0039
	Drop (out of box)	76cm on carpet, six-drop sequence		
	Drop (in box)	10 times drop including 6 faces, one corner and 3 edges on rigid surface. Drop Height: 91cm		
Approvals	CB, CE, FCC, ICES, EAC, NOM-NYCE SCT, RCM, BIS, VCCI, KC, BSMI			
Ergonomic compliance	TUVGS			

HP Wired Desktop 320M Mouse		
Physical Characteristics	Keys	Left/right key
	Dimensions(L x W x H)	4.09 x2.50 x 1.40 in (103.8x 63.4 x 35.5 mm)
	Weight	0.16 lb(72g)
Electrical	Operating voltage	5 VDC, +/-0.25V
	Power consumption	100 mA Max
	System interface	USB Port
	ESD	Contact Discharge: 8 KV Air Discharge: 15 KV (Class B)
	EMI - RFI	European Standard EN 55022: 2006+A1: 2007, Class B. FCC/CFR 47 : Part 15 Class B
Mechanical	Keycaps	0.3mm key travel
	Key actuation	75±20g
	Key life	1million cycles
	Key structure type	Tact Switch
	Key-leveling mechanisms	N/A
Environmental	Operating temperature	10° to 90° C
	Non-operating temperature	-30° C to 95° C
	Operating humidity	N/A
	Non-operating humidity	10% to 90% (non-condensing at ambient)
	Operating shock	N/A

<table>
<tr><td></td><td>Non-operating shock</td><td colspan="3">i. Half-Sine Shock – End-Use Handling, Non-Operational
Sample size: 5pcs.
Condition: Sample power off.
Axis: X, Y, Z axis (all 6 faces) – sample normal mode of operation.
Number of shocks: 1 shock/face.
Pulse duration: < 3 ms
Velocity change: 50lps (inch-per-second)- 65lps desired.

ii. Trapezoidal Shock- Transportation Environment, Non-Operational
Sample size: 5pcs.
Condition: Sample power off.
Orientation: All six faces: Front, Rear, Left, Right, Bottom, and Top.
Configuration: As intended for shipment
Number of shocks: 1 shock/face.
Minimum faired acceleration: 30G's. Test also at 40 and 50G's to find margin.
Velocity change: 266lps (inch-per-second) for product mass (m) 20<m<40lb.</td></tr>
<tr><td></td><td rowspan="5">Operating vibration</td><td>Frequency (Hz)</td><td>Slope (dB/oct)</td><td>PSD (g^2/Hz)</td></tr>
<tr><td>5-350</td><td>0</td><td>0.0001</td></tr>
<tr><td>350-500</td><td>-6</td><td>-</td></tr>
<tr><td>500</td><td>-</td><td>0.00005</td></tr>
<tr><td colspan="3">(~0.21G_{nms})</td></tr>
<tr><td colspan="3">Total Test time: 10 minutes</td></tr>
<tr><td></td><td rowspan="6">Non-operating vibration</td><td>Frequency (Hz)</td><td>Slope (dB/oct)</td><td>PSD (g^2/Hz)</td></tr>
<tr><td>5.100</td><td>0</td><td>0.015</td></tr>
<tr><td>100-137</td><td>-6</td><td>-</td></tr>
<tr><td>137-350</td><td>0</td><td>0.008</td></tr>
<tr><td>350-500</td><td>-6</td><td>-</td></tr>
<tr><td>500</td><td>-</td><td>0.0039</td></tr>
<tr><td></td><td>Drop (out of box)</td><td colspan="3">76cm on carpet, six-drop sequence</td></tr>
<tr><td></td><td>Drop (in box)</td><td colspan="3">N/A</td></tr>
<tr><td>Approvals</td><td colspan="4">CB, CE, FCC, cULus, ICES, EAC, NOM-NYCE SCT, RCM, VCCI, KC, BSMI</td></tr>
<tr><td>Ergonomic compliance</td><td colspan="4">TUVGS</td></tr>
</table>

Technical Specifications – Input/Output Devices

HP 655 wireless Mouse		
Dimensions (H x L x W)	4.74 x 2.75 x 1.63 in (120.29 x 69.97 x41.39 mm)	
Weight	0.194lb (88g)	
Environmental	Operating temperature	50° to 122° F (10° to 50° C)
	Non-operating temperature	-22° to 140° F (-30° to 60° C)
	Operating humidity	10% to 90% (non-condensing at ambient)
	Non-operating humidity	20% to 80% (non-condensing at ambient)
	Operating shock	40 g, six surfaces
	Non-operating shock	80 g, six surfaces
	Operating vibration	2-g peak acceleration
	Non-operating vibration	4-g peak acceleration
Electrical	Operating voltage	3 VDC, +/-5%
	Power consumption (typical)	10 mA Max
	Resolution	1,200 DPI (Default)
	Sensor	Pixart PAW3222DB-TJDS
	Tracking speed	10G(max), 1G=9.8m/s2
	Tracking acceleration	2.4GHz Wireless
Mechanical	Color	Jack Black
Regulatory approvals	Compliant	CB, CE, FCC, cULus, ICES, IC, TRC, TRA, ICASA, UA, EAC, CNC, ANATEL, NOM-NYCE SCT, IFETEL, MPTC, RCM, PosTel, VCCI, TELEC, KC, MCMC, IDA, BSMI, NCC, DWLF&M, TP-BY, MOC
Ergonomic compliance	Compliant	TUVGS

HP PS/2 Mouse		
Dimensions (H x L x W)	4.53 x 2.48 x1.46 in (115.2x 63 x37 mm)	
Weight	0.22lb (101.6g)	
Environmental	Operating temperature	41° to 122° F (5° to 50° C)
	Non-operating temperature	(-4° to 140° F)(-20° to 60° C)
	Operating humidity	10% to 85% (non-condensing at ambient)
	Non-operating humidity	5% to 95% (non-condensing at ambient)
	Operating shock	40 g, six surfaces
	Non-operating shock	80 g, six surfaces
	Operating vibration	2-g peak acceleration
	Non-operating vibration	4-g peak acceleration
Electrical	Tracking speed	30 inch/sec (max)
	Tracking acceleration	8G(max), 1G=9.8m/s2
	System interface	PS/2
Mechanical	Switch actuation	60±15g nominal peak force with tactile feedback
	Switch life	3 million keystrokes (Life tester)
	Switch type	Contamination-resistant switch membrane
	Key-leveling mechanisms	For all double-wide and greater-length keys
	Cable length	6 ft (1.8 m)
	Color	Jack Black
Regulatory approvals	Compliant	UL, FCC, CE Mark, TUV GS, VCCI, BSMI, RCM, KCC

Technical Specifications – Input/Output Devices

HP USB 125 (Antimicrobial)/128 Laser Mouse (China only)		
Dimensions (H x L x W)	112 x 63 x 36.2 mm (L x W x H)	
Weight	85 g	
Environmental	Operating temperature	50° to 122° F (10° to 50° C)
	Non-operating temperature	-22° to 140° F (-30° to 60° C)
	Operating humidity	10% to 90% (non-condensing at ambient)
	Non-operating humidity	20% to 80% (non-condensing at ambient)
	Operating shock	40 g, six surfaces
	Non-operating shock	80 g, six surfaces
	Operating vibration	2-g peak acceleration
	Non-operating vibration	4-g peak acceleration
Electrical	Operating voltage	5 VDC, +/-5%
	Power consumption (typical)	100mA
	Resolution	1,200 DPI
	Sensor	Optical/ Laser USB mouse sensor
	Tracking speed	30 inch/sec (max)
	Tracking acceleration	8G(max), 1G=9.8m/s2
Mechanical	Connector	USB
	Cable length	6 ft (1.8 m)
	Color	Jack Black
Regulatory approvals	Compliant	UL, FCC, CE Mark, TUV GS, VCCI, BSMI, RCM, KCC, EAC

AUDIO/MULTIMEDIA

HP Pro Mini 400 G9 Desktop PC

Type	Integrated
HD Stereo Codec	Realtek ALC3252
Audio I/O Ports	Front: Headset connector supports a CTIA and OMTP headset and is retaskable as a Line-in, Line-out, Microphone-in or Headphone-out port
Internal Speaker Amplifier	2W class D mono amplifier for the internal speaker only. External speakers must be powered
Multi-streaming Capable	Playback multi-streaming can be enabled in the audio control panel to allow independent audio streams to be sent to/from the front jacks or integrated speaker.
Sampling	Supports resolutions from 16 to 24-bit; 44.1 kHz to 192 kHz for DAC and ADC
Wavetable Syntheses	Yes - Uses OS soft wavetable
Analog Audio	Yes
# of Channels on Line-Out	Stereo (Left & Right channels)
Internal Speaker	Yes

HP Pro SFF 400 G9 Desktop PC

Type	Integrated
HD Stereo Codec	Realtek ALC3252
Audio I/O Ports	Front: Headset connector supports a CTIA and OMTP headset and is retaskable as a Line-in, Line-out, Microphone-in or Headphone-out port Rear: Audio line-in/line-out jack connector*, 3.5mm and support stereo output and retasking
Internal Speaker Amplifier	2W class D mono amplifier for the internal speaker only. External speakers must be powered
Multi-streaming Capable	Playback multi-streaming can be enabled in the audio control panel to allow independent audio streams to be sent to/from the front and rear jacks or integrated speaker.
Sampling	Supports resolutions from 16 to 24-bit; 44.1 kHz to 192 kHz for DAC and ADC
Wavetable Syntheses	Yes - Uses OS soft wavetable
Analog Audio	Yes
# of Channels on Line-Out	Stereo (Left & Right channels)
Internal Speaker	Yes

***NOTE:** System default is line-out. Line-in / Line-out can be adjusted through the audio setting

Technical Specifications – Audio/Multimedia

HP Pro Tower 400/480 G9 PCI Desktop PC

Type	Integrated
HD Stereo Codec	Realtek ALC3252
Audio I/O Ports	Front: Headset connector supports a CTIA and OMTP headset and is retaskable as a Line-in, Line-out, Microphone-in or Headphone-out port Rear: Audio line-in/line-out jack connector*, 3.5mm and support stereo output and retasking
Internal Speaker Amplifier	2W class D mono amplifier for the internal speaker only. External speakers must be powered
Multi-streaming Capable	Playback multi-streaming can be enabled in the audio control panel to allow independent audio streams to be sent to/from the front and rear jacks or integrated speaker.
Sampling	Supports resolutions from 16 to 24-bit; 44.1 kHz to 192 kHz for DAC and ADC
Wavetable Syntheses	Yes - Uses OS soft wavetable
Analog Audio	Yes
# of Channels on Line-Out	Stereo (Left & Right channels)
Internal Speaker	Yes

***NOTE:** System default is line-out. Line-in / Line-out can be adjusted through the audio setting

HP ProOne 440 G9 24 All-in-One PC

Type	Integrated
HD Stereo Codec	Realtek ALC3252
Audio I/O Ports	Side 3.5mm headset connector supports an OMTP or CTIA style headset and is re-taskable as a Line-in, Line-out, Microphone-in or Headphone-out port
Internal Speaker Amplifier	2W per channel class D stereo amplifier for the internal speakers only
Multi-streaming Capable	Playback multi-streaming allows independent audio streams to be sent to/from the side jack and integrated speakers.
Sampling	Supports resolutions from 16 to 24-bit; 44.1 kHz to 192 kHz for DAC and ADC
Wavetable Syntheses	Yes – Uses OS Soft Wavetable
Analog Audio	Yes
# of Channels on Line-Out	Stereo (Left & Right channels)
Internal Speaker	Yes - Stereo

INTEGRATED WEBCAM AND MICROPHONE

Optional integrated 5 MP RGB webcam & microphone; maximum resolution of 2592 x 1944
Optional integrated 5 MP RGB webcam with IR sensor & microphone; maximum resolution of 2592 x 1944

POWER

	Mini	SFF	TWR	AiO
External Power Supplies[1]	90W EPS, active PFC, 88% average efficiency at 115V & 89% at 230Vac	N/A	N/A	120W EPS, active PFC, 88% average efficiency at 115V & 89% at 230Vac 150W EPS, active PFC, 88% efficiency in 115Vac / 89% efficiency in 230Vac 180W EPS, active PFC, 88% average efficiency at 115V & 89% at 230Vac 230W EPS, active PFC, 89% average efficiency at 115V / 230Vac 280W EPS, active PFC, 89% average efficiency at 115V / 230Vac
80 PLUS Gold	N/A	180W active PFC / 80 PLUS Gold 87/90/87% efficient at 20/50/100% load (115V) 90/92/89% efficient at 20/50/100% load (230V)	180W active PFC / 80 PLUS Gold 87/90/87% efficient at 20/50/100% load (115V) 90/92/89% efficient at 20/50/100% load (230V)	N/A
80 PLUS Platinum	N/A	240W active PFC / 80 PLUS Platinum 90/92/89% efficient at 20/50/100% load (115V) 91/93/90% efficient at 20/50/100% load (230V)	260W active PFC / 80 PLUS Platinum 400Wactive PFC / 80 PLUS Platinum 90/92/89% efficient at 20/50/100% load (115V) 91/93/90% efficient at 20/50/100% load (230V)	N/A
Operating Voltage Range	90Vac~264Vac	90Vac~264Vac	90Vac~264Vac	90Vac~264Vac
Rated Voltage Range	100Vac~240Vac	100Vac~240Vac	100Vac~240Vac	100Vac~240Vac
Rated Line Frequency	50HZ~60HZ	50HZ~60HZ	50HZ~60HZ	50HZ~60HZ
Operating Line Frequency	47HZ~63HZ	47HZ~63HZ	47HZ~63HZ	47HZ~63HZ
Rated Input Current with Energy Efficient* Power Supply	90W≦1.7A	180W Gold ≦ 2.3A 240W Platinum ≦ 2.9A	180W≦2.3A 260W≦3.1A 400W≦5.2A	120W≦1.7A 150W≦2.5A 180W≦2.5A 230W≦3.5A
DC Output	+19.5V	+12V	+12V	+19.5V

Technical Specifications – Power

Current Leakage (NFPA 99: 2012)	Less than 500 microamps of leakage current at 264 Vac with the ground wire disconnected, as required for Non-patient Electrical Appliances and Equipment used in a patient care facility or that contact patients in normal use. Per section 10.3.5.1. Less than 100 microamps of leakage current at 264 Vac with the ground wire intact with normal polarity, as required for Non-patient Electrical Appliances and Equipment used in a patient care facility or that contact patients in normal use. Per section 10.3.5.1.	Less than 500 microamps of leakage current at 264 Vac with the ground wire disconnected, as required for Non-patient Electrical Appliances and Equipment used in a patient care facility or that contact patients in normal use. Per section 10.3.5.1. Less than 100 microamps of leakage current at 264 Vac with the ground wire intact with normal polarity, as required for Non-patient Electrical Appliances and Equipment used in a patient care facility or that contact patients in normal use. Per section 10.3.5.1.	Less than 500 microamps of leakage current at 264 Vac with the ground wire disconnected, as required for Non-patient Electrical Appliances and Equipment used in a patient care facility or that contact patients in normal use. Per section 10.3.5.1. Less than 100 microamps of leakage current at 264 Vac with the ground wire intact with normal polarity, as required for Non-patient Electrical Appliances and Equipment used in a patient care facility or that contact patients in normal use. Per section 10.3.5.1.	Less than 500 microamps of leakage current at 264 Vac with the ground wire disconnected, as required for Non-patient Electrical Appliances and Equipment used in a patient care facility or that contact patients in normal use. Per section 10.3.5.1. Less than 100 microamps of leakage current at 264 Vac with the ground wire intact with normal polarity, as required for Non-patient Electrical Appliances and Equipment used in a patient care facility or that contact patients in normal use. Per section 10.3.5.1.
Power Supply Fan	N/A	50mm variable speed	70mm variable speed	N/A
Power cord length*	6.0 ft. (1.83 m)	6.0 ft. (1.83 m)	6.0 ft. (1.83 m)	6.0 ft. (1.83 m)
Dimensions	90W: 126 x 50 x 30 mm	200 x 85 x 53 mm	165 x 95 x 73 mm	120W: 138mm x 68.5mm x 25.4mm 150W: 148 x 75.5 x 25.4mm 180W: 165.5mm x 79mm x 25.4mm 230W: 180mm x 88mm x 25.4mm

1. External power supplies, power cords, cables and peripherals are not low halogen. Service parts obtained after purchase may not be low halogen.

***NOTE:** 2m for India

Technical Specifications – Power

The power supply shall comply with harmonic input current requirements as detailed in EN61000-3-2 and JEIDA MITI standards.
The harmonic input current requirements must be met under the following operating conditions:
Load Requirements: 50% and 100%
Input Voltage: 230Vac/50Hz.
For active power factor correction the power factor at 50% &100% loads shall be greater than 0.9 over the entire nominal input voltage range (100-127VAC and 200-240VAC).

Condition	Standard Efficiency	82/85/82%	85/88/85%	87/90/87%	90/92/89%	Input Voltage
10% of Rated Load	-	75%	81%	84%	86%	115Vac/60HZ
20% of Rated Load	-	82%	85%	87%	90%	115Vac/60HZ
50% of Rated Load	-	85%	88%	90%	92%	115Vac/60HZ
	PF>0.9	PF>0.9	PF>0.9	PF>0.9	PF>0.95	
	PF>0.9	PF>0.9	PF>0.9	PF>0.9	PF>0.9	230Vac/50HZ
100% of Rated Load	70%	82%	85%	87%	89%	115Vac/60HZ
	PF>0.9	PF>0.9	PF>0.9	PF>0.9	PF>0.9	230Vac/50HZ

WEIGHTS & DIMENSIONS[1]

	DM	SFF
Chassis (W x D x H)	6.97 x 6.89 x 1.35 in 177 x 175 x 34.2 mm	10.63 x 12.12 x 3.74 in 270 x 308 x 95 mm
System Volume	64 cu in 1.05 L	481.85 cu in 7.9 L
System Weight[1]	2.74 lb 1.25 kg	9.59 lb 4.35 kg
Max Supported Weight (desktop orientation)	N/A	9.55 lb 4.38 kg
Packaging Dimension (WxDxH)	19.57 x 5.04 x 8.78 in (497 x 128 x 223 mm) **MPP***: 19.61 x 9.25 x 5.20 in (498 x 235 x 132 mm)	15.52 x 19.65 x 8.07 in (394 x 499 x 205 mm) **MPP***: 15.52 x 19.65 x 8.07 in (394 x 499 x 205 mm)
Shipping Weight	6.52 lb (2.97 kg) **MPP***: 7.50 lb (3.40 kg)	15.31 lb (6.95 kg) **MPP***: 15.97 lb (7.25 kg)
Palletization Profile (Fabricated EPE)	18-units per layer 5 or 6 layers max depending on details of air freight 90 or 108 units per pallet depending on details of air freight 45.354 x 39.13 x 57.80 in, 1152 x 994 x 1468 mm (including pallet)	6-units per layer 11 layer max 66 per pallet 47.24 x 39.37 x 94.63 in, 1200 x 1000 x 2412 mm (including pallet)
Palletization Profile** (Molded Pulp)	10-units per layer 10 to 19 layers max depending on details of freight 100 or 190 units per pallet depending on details of freight 46.26 x 39.21 x 103.74 in, 1175 x 996 x 2635 mm (including pallet)	6-units per layer 11 layer max 66 per pallet 47.24 x 39.37 x 94.63 in, 1200 x 1000 x 2412 mm (including pallet)

1. Packaging material used will vary by country
2. Configured with 1 HDD & 1 ODD; DM configured with 1 HDD only

***NOTE:** "Molded pulp paper" cushion.

****NOTE:** The palletization is for single pack

Technical Specifications – Weights and Dimensions

	TWR
Chassis (W x D x H)	6.1 x 12.13 x 13.27 in 155x 308 x 337 mm
System Volume	981.9 cu in 16.1 L
System Weight[1]	11.7 lb 5.31 kg
Max Supported Weight (desktop orientation)	11.2 lb 5.08 kg
Packaging Dimension (W x D x H)	15.75 x 19.65 x 11.30 in (400 x 499 x 287 mm) **MPP**: 15.75 x 19.65 x 11.30 in (400 x 499 x 287 mm)
Shipping Weight	17.69 lb (8.03 kg) **MPP**: 18.5 lb (8.4 kg)
Palletization Profile (Fabricated EPE)	6-units per layer 8 layer max 48 per pallet 47.24 x 39.37 x 95.12 in, 1200 x 1000 x 2416 mm (including pallet)
Palletization Profile (Molded Pulp)	6-units per layer 8 layer max 48 per pallet 47.24 x 39.37 x 95.12 in, 1200 x 1000 x 2416 mm (including pallet)

1. Packaging material used will vary by country
2. Configured with 1 HDD & 1 ODD; DM configured with 1 HDD only

ALL-IN-ONE DIMENSIONS[1]

		Without Stand (VESA Cover Plate)		Cantilever Stand (Fixed Height Tilt Stand)		Adjustable Height Stand	
		cm/kg	inch/lb	cm/kg	inch/lb	cm/kg	inch/lb
Product	**Width**	53.93 cm	21.23 in	53.93 cm	21.23 in	53.93 cm	21.23 in
	Length/Depth	8.96 cm	3.53 in	18.70 cm	7.36 in	22.5 cm	8.85 in
	Height	35.36 cm	13.92 in	40.28 cm	15.85 in	37.94 ~ 50.94 cm	14.93 ~ 20.05 in
	Weight	6.93 kg	15.28 lb	7.315 kg	16.12 lb	7.775kg	17.57 lb
Package	**Width**	66.0 cm	25.98 in	66.0 cm	25.98 in	66.0 cm	25.98 in
	Length/Depth	19.5 cm	7.67 in	19.5 cm	7.67 in	19.5 cm	7.67 in
	Height	46.2 cm	18.19 in	46.2 cm	18.19 in	46.2 cm	18.19 in
	Weight	10.87 kg	23.96 lb	11.59 kg	25.55 lb	12.12 kg	26.72 lb
Palletization for Sea/Rail	**Width**	120.0 cm	47.24 in	120.0 cm	47.24 in	120.0 cm	47.24 in
	Length/Depth	100.0 cm	39.37 in	100.0 cm	39.37 in	100.0 cm	39.37 in
	Height	198.8 cm	78.27 in	198.8 cm	78.27 in	198.8 cm	78.27 in
	Weight	319.36 kg	704.06 lb	324.52 kg	715.44 kg	354.36 kg	718.22 lb
	Qty / Layer	7		7		7	
	Layers	4		4		4	
Qty / Pallet via Sea/Rail		28		28		28	
Qty / Pallet via Air		21		21		21	

1. Packaging material used will vary by country.
2. Configured with 1 HDD & 1 ODD.
3. Package weight is based on EPE package.
4. Actual system weight will depend on the system configuration.

MISCELLANEOUS FEATURES

Management Features

- Advanced Configuration and Power Management Interface (ACPI). Allows the system to wake from a low power mode. Controls system power consumption, making it possible to place individual cards and peripherals in a low-power or powered-off state without affecting other elements of the system.
- Intel® Wired for Management support; industry wide initiative to make Intel® architecture based PCs, servers and mobile computers more inherently manageable out-of-the-box and over the network
- Dual State Power Button; acts as both an on/off button and a suspend-to-sleep button

Serviceability Features

- Dual colored power LED on front of computer to indicate either normal or fault condition
- Diagnostic LED Explanation Table:
    - Power LED will blink red 2 to 5 times, then blink white 2 or more times, then repeat (with beep tones for each blink initially):
        - 2 red + 2 white User must provide file for BIOS recovery (USB storage typically)
        - 2 red + 3 white User must enter a key sequence to proceed with recovery by policy
        - 2 red + 4 white BIOS recovery is in progress
        - 3 red + 2 white Memory could not be initialized
        - 3 red + 3 white Graphics adaptor could not be found
        - 3 red + 4 white Power supply failure / not connected
        - 3 red + 5 white Processor not installed
        - 3 red + 6 white Current processor does not support an enabled feature
        - 4 red + 2 white Processor has exceeded its temperature threshold / system thermal shutdown
        - 4 red + 3 white System internal temperature has exceeded its threshold
        - 5 red + 2 white System controller firmware is not valid
        - 5 red + 3 white System controller detected BIOS is not executing
        - 5 red + 4 white BIOS could not complete initialization / mainboard failure
        - 5 red + 5 white System controller rebooted the system after a health or recovery timer triggered
- HP PC Hardware Diagnostics UEFI:
    - This utility enables hardware level testing outside the operating system on many components. The diagnostics can be invoked by pressing F2 at POST, and is available as a download from HP Support
- System/Emergency ROM
- Flash ROM
- CMOS Battery Holder for easy replacement
- Flash Recovery with Video Configuration Record Software
- 1 Aux Power LED on System PCA
- Processor ZIF Socket for easy Upgrade
- Over-Temp Warning on Screen (Requires IM Agents)
- DIMM Connectors for easy Upgrade
- Clear CMOS Button
- NIC LEDs (integrated) (Green & Amber)
- Dual Color Power and HD LED - To Indicate Normal Operations and Fault Conditions
- Color coordinated cables and connectors
- Tool-less Hood Removal
- Front power switch
- System memory can be upgraded without removing the system board or any internal components
- Tool-less Hard Drive, memory & optical drive Removal (For MT, SFF, and DM only)
- Green Pull Tabs, and Quick Release Latches for easy Identification

Miscellaneous Features

Additional Features	Description
Product Orientation	Microtower (MT) can be oriented in a tower (vertical) orientation. Small Form Factor (SFF) can be oriented as either a desktop (horizontal) or a tower (vertical) with optional vertical stand. Desktop Mini (DM) can be oriented as either a desktop (horizontal) or a tower (vertical) with optional vertical stand.
Boot Sectors Protection	MBR and GPT sectors of the hard drive are critical to booting the operating system. By saving the MBR or GPT data (depending on the how the OS was installed), the BIOS will be able to monitor for changes and allow the user to override them with the backup copy at boot-up.
Drive Protection System	DPS Access through F10 Setup during Boot A diagnostic hard drive self- test. It scans critical physical components and every sector of the hard drive for physical faults and then reports any faults to the user Running independently of the operating system, it can be accessed through a Windows-based diagnostics utility or through the computer's setup procedure. It produces an evaluation on whether the hard drive is the source of the problem and needs to be replaced The system expands on the Self-Monitoring, Analysis, and Reporting Technology (SMART), a continuously running systems diagnostic that alerts the user to certain types of failures
SMART Technology (Self-Monitoring, Analysis and Reporting Technology)	Allows hard drives to monitor their own health and to raise flags if imminent failures were predicted
SMART I - Drive Failure Prediction	Predicts failures before they occur. Tracks fault prediction and failure indication parameters such as re-allocated sector count, spin retry count, calibration retry count
SMART II - Off-Line Data Collection	By avoiding actual hard drive failures, SMART hard drives act as "insurance" against unplanned user downtime and potential data loss from hard drive failure
SMART III - Off-Line Read Scanning with Defect Reallocation	IOEDC: I/O Error Detection Circuitry
SMART IV - End-to-End CRC for hard drives	Detects errors in Read/Write buffers on HDD cache RAM

AFTER MARKET OPTIONS

Graphics Solutions	Mini	SFF	TWR	AiO	Part Number
NVIDIA T400 4GB GDDR6 3mDP		X	X		5Z7E0AA
AMD Radeon RX 6300 2GB GDDR6 DP+HDMI FH			X		7Y6P7AA
AMD Radeon RX 6300 2GB GDDR6 DP+HDMI LP		X			803S9AA
Intel Arc A380 6GB GDDR6 FH PCIe x16 3DP+HDMI			X		9Q6G0AA
HP DisplayPort™ To HDMI True 4k Adapter	X	X	X	X	2JA63AA
HP HDMI Standard Cable Kit	X	X	X	X	T6F94AA
HP DisplayPort™ Cable Kit	X	X	X	X	VN567AA
HP DisplayPort™ To VGA Adapter	X	X	X	X	AS615AA
HP DisplayPort™ To DVI-D Adapter	X	X	X	X	FH973AA

Desktop Mini Accessories	Mini	SFF	TWR	AiO	Part Number
HP Desktop Mini 2.5" SATA Drive Bay kit v2	X				13L70AA
HP Desktop Mini LockBox V2	X				3EJ57AA
HP Desktop Mini DVD-Writer ODD Expansion Module	X				K9Q83AA
HP Desktop Mini v4+ VESA Sleeve	X				99T54AA
HP Desktop Mini v4+ VESA Sleeve with Power Supply Holder	X				99T55AA
HP B250 PC Mounting Bracket	X				8RA46AA
HP B200 PC Mounting Bracket	X				762T5AA
HP B300 PC Mounting Bracket	X				2DW53AA
HP B300 PC Mounting Bracket with Power Supply Holder	X				7DB37AA
HP Desktop Mini Vertical Chassis Stand	X				G1K23AA
B550 PC Mounting Bracket	X				16U00AA
HP B560 PC Mounting Bracket	X				763U8AA
HP Quick Release Bracket 2	X				6KD15AA

Data Storage Drives	Mini	SFF	TWR	AiO	Part Number
HP PCIe Gen 4 NVME TLC M.2 512GB SSD	X	X	X	X	406L8AA
HP PCIe Gen 4 NVME TLC M.2 1TB SSD	X	X	X	X	406L7AA
HP 1TB 7200rpm SATA 6Gb/s 3.5” Hard Drive		X	X		QK555AA

After Market Options

Input Devices	Mini	SFF	TWR	AiO	Part Number
HP Wired Desktop 320K Keyboard	X	X	X	X	9SR37AA
HP USB Business Slim CCID SmartCard Keyboard	X	X	X	X	Z9H48AA
HP Wired Desktop 320MK Mouse and Keyboard	X	X	X	X	9SR36AA
HP Wired Desktop 320M Mouse	X	X	X	X	9VA80AA
HP 655 Wireless Keyboard and Mouse Combo	X	X	X	X	4R009AA
HP 455 Programmable Wireless Keyboard	X	X	X	X	4R177AA
HP 125 Wired Keyboard	X	X	X	X	266C9AA
HP 125 Wired Mouse	X	X	X	X	265A9AA
HP 128 Laser Wired Mouse	X	X	X	X	265D9AA
HP 225 Wired Mouse and Keyboard Combo	X	X	X	X	286J4AA
HP 225 Antimicrobial Wired Mouse and Keyboard Combo (China Only)	X	X	X	X	286K3AA

System Memory	Mini	SFF	TWR	AiO	Part Number
HP 4GB DDR4-3200 UDIMM		X	X		13L78AA
HP 8GB DDR4-3200 UDIMM		X	X		13L76AA
HP 16GB DDR4-3200 UDIMM		X	X		13L74AA
HP 32GB DDR4-3200 UDIMM		X	X		13L72AA
HP 4GB DDR4-3200 SODIMM	X			X	13L79AA
HP 8GB DDR4-3200 SODIMM	X			X	13L77AA
HP 16GB DDR4-3200 SODIMM	X			X	13L75AA
HP 32GB DDR4-3200 SODIMM	X			X	13L73AA
HP 8GB DDR5-4800 UDIMM		X	X		4M9X9AA
HP 16GB DDR5-4800 UDIMM		X	X		4M9Y0AA
HP 32GB DDR5-4800 UDIMM		X	X		4M9Y2AA
HP 8GB DDR5-4800 SODIMM	X			X	4M9Y4AA
HP 16GB DDR5-4800 SODIMM	X			X	4M9Y5AA
HP 32GB DDR5-4800 SODIMM	X			X	4M9Y7AA
HP 8GB DDR5-5600 SODIMM	X			X	79U70AA
HP 16GB DDR5-5600 SODIMM	X			X	79U71AA
HP 32GB DDR5-5600 SODIMM	X			X	79U72AA

Multimedia Devices	Mini	SFF	TWR	AiO	Part Number
HP S101 Speaker Bar		X	X		5UU40AA
HP Z G3 Conferencing Speaker Bar	X	X	X		32C42AA
HP Stereo 3.5mm Headset G2	X	X	X		428K7AA
HP Stereo USB Headset G2		X	X		428K6AA

After Market Options

Communication Devices	Mini	SFF	TWR	AiO	Part Number
Intel® Ethernet I225-T1 GbE NIC		X	X		406L9AA
Intel® Ethernet I226-T1 2.5GbE NIC		X	X		9P1U8AA

Security Devices	Mini	SFF	TWR	AiO	Part Number
HP Business PC Security Lock v3 Kit		X	X		3XJ17AA
HP Keyed Cable Lock 10mm	X	X	X	X	T1A62AA

Stands and Mounting Accessories	Mini	SFF	TWR	AiO	Part Number
HP B250 PC Mounting Bracket	X				8RA46AA
HP B300 PC Mounting Bracket	X				2DW53AA
HP B550 PC Mounting Bracket	X				16U00AA
HP Quick Release Bracket 2	X			X	6KD15AA
HP ProOne G9 VESA Plate with Power Supply Holder				X	56P78AA

I/O Devices	Mini	SFF	TWR	AiO	Part Number
HP DisplayPort Port Flex IO v2	X	X	X		13L54AA
800 G9 SATA Power Cable Non RF		X			8H5A4AA
400 G9 SATA Power Cable Non RF			X		8H5A3AA
HP HDMI Port Flex IO v2	X	X	X		13L55AA
HP Type-C USB 3.1 Gen2 Port Flex IO v2		X	X		13L59AA
HP Type-C USB 3.1 Gen2 Port with 100W PD Flex IO v2	X				13L60AA
HP VGA Port Flex IO v2	X	X	X		13L53AA
HP Serial Port Flex IO 2nd	X				13L57AA
HP PCIe x1 Parallel Port Card		X	X		N1M40AA
HP 800/600/400 G3 Serial/ PS/2 Adapter		X	X		1VD82AA
HP USB to Serial Port Adapter	X	X	X	X	J7B60AA
HP Serial Port Flex IO v3	X	X	X		5B895AA
HP USB-C To DisplayPort Adapter	X			X	N9K78AA
HP Single Mini Display Port Adapter to Display Port Adapter		X	X		2MY05AA

NOTE: For more detail on HP I/O Devices please refer to the HP FLEX IO Option Cards QuickSpecs. URL is: http://h20195.www2.hp.com/v2/GetDocument.aspx?docname=c06042607

© Copyright 2024 HP Development Company, L.P. The information contained herein is subject to change without notice. The only warranties for HP products are set forth in the express limited warranty statements accompanying such products. Nothing herein should be construed as constituting an additional warranty. HP shall not be liable for technical or editorial errors or omissions contained herein. Microsoft and Windows are registered trademarks or trademarks of Microsoft Corporation in the U.S. and/or other countries. Intel, Celeron, Core, Pentium are registered trademarks or trademarks of Intel® Corporation in the U.S. and/or other countries. Bluetooth® is a trademark of its proprietor, used by HP, Inc. under license. USB Type-C™ and USB-C™ are trademarks of USB Implementers Forum. NVIDIA, GeForce and NVS are trademarks and/or registered trademarks of NVIDIA Corporation in the U.S. and other countries. AMD and Radeon are trademarks of Advanced Micro Devices, Inc. ENERGY STAR is a registered trademark owned by the U.S. Environmental Protection Agency. DisplayPort™ and the DisplayPort™ logo are trademarks owned by the Video Electronics Standards Association (VESA®) in the United States and other countries.

Change Log

Date	Version History	Action	Description of Change
April 26, 2024	From v1 to v2	Update	T400 cards multi display support updated to 3
April 29, 2024	From v2 to v3	Replacement	Intel® I225-LM 2.5 for Intel FoxPond1 I225-T1 2.5GbE
May 3, 2024	From v3 to v4	Removal	HP Desktop Mini Port Cover v3 from AMO section
May 8, 2024	From v4 to v5	Removal	DDR5-5600 64GB 2SO-DIMM card from Memory section
July 22, 2024	From v5 to v6	Correction	Integrated SATA storage connector corrected checked for AiO
August 7, 2024	From v6 to v7	Correction	Intel® 12th Generation Core™ Processors and Intel® Pentium® Processors specs corrected.
November 11, 2024	From v7 to v8	Addition	RAID note added to 3.5 inch SATA Hard Disk Drives in Storage section
November 25, 2024	From v8 to v9	Update	Padlock to Padlock loop in call out images for TWR 256GB/512GB/1TB M.2 2280 PCIe NVMe SSD tables updated
December 4, 2024	From v9 to v10	Update	Padlock to Padlock loop in call out images for SFF
December 5, 2024	From v10 to v11	Addition	UEFI Self Certification Level: 2.7B added to BIOS in SW section
December 17, 2024	From v11 to v12	Addition	Dust filter statement added to Ata a Glance section.
	From v12 to v13		
	From v13 to v14		
	From v14 to v15		
	From v15 to v16		
	From v16 to v17		
	From v17 to v18		
	From v18 to v19		
	From v19 to v20		
	From v20 to v21		
	From v21 to v22		
	From v22 to v23		