Regulatory, Safety, and Environmental Notices User Guide

SUMMARY

This guide provides regulatory, safety, and environmental information that is compliant with U.S., Canadian, and international regulations for notebook computers, tablets, desktops, thin clients, personal workstations, all-in-ones, and point-of-sale terminals.

Legal information

© Copyright 2022–2024 HP Development Company, L.P.

Bluetooth is a trademark owned by its proprietor and used by HP Inc. under license. ENERGY STAR and the ENERGY STAR mark are registered U.S. marks. Java is a registered trademark of Oracle and/or its affiliates. WiGig is a registered trademark of Wi-Fi Alliance.

The information contained herein is subject to change without notice. The only warranties for HP products and services are set forth in the express warranty statements accompanying such products and services. Nothing herein should be construed as constituting an additional warranty. HP shall not be liable for technical or editorial errors or omissions contained herein.

Fifth Edition: July 2024

First Edition: July 2022

Document Part Number: N25728-005

Table of contents

1 About this guide 1

2 Regulatory notices 2

Accessing regulatory labels 2

Federal Communications Commission Class B notice 3

Modifications 3

Cables 3

Products with wireless LAN devices or HP Mobile Broadband Modules 3

Wireless devices with 5.925 GHz–7.125 GHz 4

Global Class A notices 4

Federal Communications Commission Class A notice 4

Modifications 4

Cables 4

Australia notice 5

European Union and UK notice 5

Japan notice 5

South Korea notice 5

Taiwan notice 5

Belarus regulatory notice 5

Brazil notice 6

Canada notices 6

European Union and UK regulatory notices 6

Declaration of Conformity 6

Products with radio functionality (EMF) 7

Restrictions for products with radio functionality (select products only) 7

Radio frequency bands and maximum power levels (select products and countries only) 7

Ergonomics notice 8

European telephone network declaration (Modem/Fax) 8

Australia and New Zealand notice 8

China WWAN notice 9

China radio equipment notice 9

微功率短距离无线电发射设备使用声明 9

China Radio Management of Wireless Charging Equipment notice (select products only) 9

Japan notice 10

Wireless LAN, Wireless WAN, and Bluetooth® certification markings 10

Mexico notice 10

Eurasian Union regulatory notices 11

Производитель и дата производства 11

Өндіруші және өндіру мерзімі 11

Местные представители: 11
Жергілікті өкілдіктері: 11
Singapore wireless notice 12
South Korea notices 12
Regulatory submission document 12
Thailand wireless notice 13
Taiwan NCC notices 13
無線 LAN 802.11 裝置/藍牙裝置/短距離通訊裝置: 13
Airline travel notice 13
User-replaceable battery notices 13
Factory-sealed battery notices 13
Laser compliance 14
Telecommunications device approvals 14
Modem notices 14
U.S. modem statements 15
Canada modem statements 15
Japan modem statements 16
New Zealand modem statements 16
Voice support 17
Macrovision Corporation notice 17
3 Safety notices 18
Important safety information 18
Heat-related safety warning notice 19
Potential safety conditions notice 19
Installation conditions 19
Acoustics notice 19
Battery notices 20
Fan notices 21
Headset and earphone volume level notice 21
Laser safety 22
Power supply and power cord set requirements 22
Power supply class I grounding requirements 22
Brazil notice 22
Denmark 22
Finland 23
Norway 23
Sweden 23
Power supply requirements 23
China 23
For use in Norway 23
Power cord set requirements 23
Power cord notice 24

DC plug of external HP power supply 24
Japan power cord notice 24
Japan power cord requirements 24
Pinch hazard 24
TV antenna connectors protection 25
External television antenna grounding 25
Lightning protection 25
Note to CATV system installer 26
Travel notice 26
China safety notices 26
China altitude notice 26
China tropical warning notice 27
Norway and Sweden cable grounding notice for products with a TV tuner 27
Taiwan eyesight notice 27
使用過度恐傷害視力 27
4 Environmental notices 28
Electronic hardware, packaging and battery recycling 28
Disposal of waste equipment by users 28
Brazil alkaline battery disposal 28
Brazil hardware recycling information 28
France Triman WEEE and recycling label 29
Korea disposal and recycling notices 29
Taiwan battery recycling information 29
Turkey WEEE regulation 29
ENERGY STAR® Certification (select products only) 30
Chemical substances 31
Perchlorate material-special handling may apply 31
China environmental notices 31
China PC energy label 32
China RoHS 35
笔记本电脑和平板电脑产品中有害物质或元素的名称及含量 35
台式机、瘦客户端、个人工作站、一体机和销售点终端产品中有害物质或元素的名称及含量 36
台灣針對筆記型電腦和平板電腦的有害物質限制使用管理辦法 (RoHS) 38
限用物質含有情況標示聲明書 38
台灣針對桌上型電腦、精簡型電腦、個人工作站、一體成形電腦及銷售點終端機的有害物質限制使用管理辦法 (RoHS) 39
限用物質含有情況標示聲明書 39
India restriction of hazardous substances (RoHS) 40
Information for European Union Commission Regulation 1275/2008 41
IT ECO declarations 41

Japan restriction of hazardous substances (RoHS) 41
Ley para el Aprovechamiento Sustentable de la Energía de México 41
TCO Certified 42
TCO Certified Edge 43
Index 44

1 About this guide

This guide provides regulatory, safety, and environmental information that is compliant with U.S., Canadian, and international regulations for notebook computers, tablets, desktops, thin clients, personal workstations, all-in-ones, and point-of-sale terminals.

To access the latest user guides, go to http://www.hp.com/support, and follow the instructions to find your product. Then select **User Guides**.

⚠ **WARNING!** Indicates a hazardous situation that, if not avoided, **could** result in serious injury or death.

⚠ **CAUTION:** Indicates a hazardous situation that, if not avoided, **could** result in minor or moderate injury.

IMPORTANT: Indicates information considered important but not hazard-related (for example, messages related to property damage). Warns the user that failure to follow a procedure exactly as described could result in loss of data or in damage to hardware or software. Also contains essential information to explain a concept or to complete a task.

NOTE: Contains additional information to emphasize or supplement important points of the main text.

TIP: Provides helpful hints for completing a task.

2 Regulatory notices

This chapter provides country- and region-specific non-wireless and wireless regulatory notices and compliance information for the computer product. Some of these notices may not apply to your product.

One or more integrated wireless devices may be installed. In some environments, the use of wireless devices may be restricted. Such restrictions may apply aboard airplanes, in hospitals, near explosives, in hazardous locations, and so on. If you are uncertain of the policy that applies to the use of this product, ask for authorization to use it before you turn it on.

Accessing regulatory labels

Some products might also provide electronic regulatory labels (e-labels) that can be accessed through the system BIOS.

Regulatory labels, which provide country or regional regulatory information (for example, FCC ID), might be physically located on the bottom of the computer, inside the battery bay (select products only), under the removable service door (select products only), on the back of the display, or on the wireless or modem module.

NOTE: Electronic labels are not available on all products.

NOTE: Devices not for sale or use in the United States might not contain an FCC ID.

NOTE: The list of available electronic label items varies depending on the computer model and installed devices.

To view electronic regulatory labels:

1. Turn on or restart the computer.
2. Press esc or f10 to enter Computer Setup.
3. Depending on your computer model, use one of the following methods to view an electronic label:
   a. Use a pointing device or the arrow keys to select **Advanced** or **Main**, select **Electronic Labels**, and then press enter.
   b. Use a pointing device or the arrow keys to select one of the listed items, and then press **OK**.

   – or –

   a. Use a pointing device or the arrow keys to select **Main**, and then select **Electronic Label System**.
   b. Press enter. The electronic label is displayed.
4. To exit Computer Setup menus without making any changes, complete one of these steps:
   - Select the **Exit** icon in the lower-right corner of the screen, and then follow the on-screen instructions.
   - Use the arrow keys to select **Main**, select **Ignore Changes and Exit**, and then press enter.

Federal Communications Commission Class B notice

This equipment has been tested and found to comply with the limits for a Class B digital device, pursuant to Part 15 of the FCC Rules. Use the following notices for Class B products.

These limits provide reasonable protection against harmful interference in a residential installation. This equipment generates, uses, and can radiate radio frequency energy and, if not installed and used in accordance with the instructions, may cause harmful interference to radio communications. However, there is no guarantee that interference will not occur in a particular installation.

If this equipment does cause harmful interference to radio or television reception, which can be determined by turning the equipment off and on, the user is encouraged to try to correct the interference using one or more of the following measures:

- Reorient or relocate the receiving antenna.
- Increase the separation between the equipment and receiver.
- Connect the equipment to an outlet on a circuit that is different from the one that the receiver is connected to.
- Consult the dealer or an experienced radio or television technician for help.

This device complies with Part 15 of the FCC Rules. Operation is subject to the following two conditions:

1. This device may not cause harmful interference.
2. This device must accept any interference received, including interference that may cause undesired operation.

For questions regarding this product, contact HP using any of these methods:

- Write to:

  HP Inc.

  1501 Page Mill Road

  Palo Alto, CA 94304
- Call HP at 650-857-1501
- Email techregshelp@hp.com

To identify this product, refer to the part, series, or model number found on the product.

Modifications

The FCC requires the user to be notified that any changes or modifications made to this device that are not expressly approved by HP may void the user's authority to operate the equipment.

Cables

To maintain compliance with FCC Rules and Regulations, connections to this device must be made with shielded cables having metallic RFI/EMI connector hoods.

Products with wireless LAN devices or HP Mobile Broadband Modules

This device must not be colocated or operating in conjunction with any other antenna or transmitter.

⚠ **WARNING!** **Exposure to Radio Frequency Radiation** The radiated output power of this device is below the FCC radio frequency exposure limits. Nevertheless, the device should be used in a manner that is in conformance with the expected typical usage.

Wireless devices with 5.925 GHz–7.125 GHz

The operation of this device is prohibited for control of or communications with unmanned aircraft systems.

Global Class A notices

Use these notices for Class A products.

Federal Communications Commission Class A notice

This equipment has been tested and found to comply with the limits for a Class A digital device, pursuant to Part 15 of the FCC rules.

These limits are designed to provide reasonable protection against harmful interference when the equipment is operated in a commercial environment. This equipment generates, uses and can radiate radio frequency energy and, if not installed and used in accordance with the instructions, may cause harmful interference to radio communications. Operation of this equipment in a residential area is likely to cause harmful interference in which case the user will be required to correct the interference at his own expense.

For questions regarding this product:

- Write to:

  HP Inc.

  1501 Page Mill Road

  Palo Alto, CA 94304

- Call HP at 650-857-1501

  – or –

- Email techregshelp@hp.com

To identify this product, refer to the part, series, or model number found on the product.

Modifications

The FCC requires the user to be notified that any changes or modifications made to this device that are not expressly approved by Hewlett Packard Enterprise may void the user's authority to operate the equipment.

Cables

To maintain compliance with FCC Rules and Regulation, connections to this device must be made with shielded cables having metallic RFI/EMI connector hoods.

Australia notice

Use this notice for Class A products in Australia.

⚠ **WARNING!** This is a Class A product. In a domestic environment, this product may cause radio interference in which case the user may be required to take adequate measures.

European Union and UK notice

Use this notice for Class A products in the European Union and UK.

⚠ **WARNING!** This is a Class A product. In a domestic environment, this product may cause radio interference in which case the user may be required to take adequate measures.

Japan notice

VCCI- CISPR32

この装置は、クラスA機器です。この装置を住宅環境で使用すると電波妨害を引き起こすことがあります。この場合には使用者が適切な対策を講ずるよう要求されることがあります。 VCCI－A

South Korea notice

이 기기는 업무용 환경에서 사용할 목적으로 적합성평가를 받은 기기로서 가정용 환경에서 사용하는 경우 전파간섭의 우려가 있습니다

Taiwan notice

此為甲類資訊技術設備

為避免電磁干擾，本產品不應安裝或使用於住宅環境。

Belarus regulatory notice

The product complies with the Belarus National Radio/Telecom Technical Regulation TR 2018/024/BY.



Brazil notice

Este equipamento não tem direito à proteção contra interferência prejudicial e não pode causar interferência em sistemas devidamente autorizados.

IMPORTANT: A alimentação de energia é predefinida para 220/230V. Se você possuir tomada elétrica de 110/115V, por favor, altere a chave na parte traseira do seu computador para a tensão correta.

Para maiores informações, consulte o site da ANATEL – www.anatel.gov.br.

Canada notices

If this device has WLAN or Bluetooth capability, the device complies with Industry Canada licence-exempt RSS standard(s). Operation is subject to the following two conditions: (1) this device may not cause interference, and (2) this device must accept any interference, including interference that may cause undesired operation of the device.

WARNING! **Exposure to Radio Frequency Radiation:** The radiated output power of this device is below the Industry Canada radio frequency exposure limits. Nevertheless, the device should be used in a manner that is in conformance with the expected typical usage.

IMPORTANT: Wireless devices operating in the 6 GHz band shall not be used for control of or communications with unmanned aircraft systems.

IMPORTANT: When using IEEE 802.11a, n, or ac wireless LAN, this product is restricted to indoor use, due to its operation in the 5.15 GHz to 5.25 GHz frequency range. Industry Canada requires this product to be used indoors for the frequency range of 5.15 GHz to 5.25 GHz to reduce the potential for harmful interference to co-channel mobile satellite systems. High-power radar is allocated as the primary user of the 5.25 GHz to 5.35 GHz and 5.65 GHz to 5.85 GHz bands. These radar stations can cause interference with and/or damage to this device.

The antennas for this device are not replaceable. Any attempt at user access will damage your computer.

European Union and UK regulatory notices

The European Union and UK have their own set of regulatory notices.

Declaration of Conformity

Products bearing the CE marking and UK marking have been constructed so that they can operate in at least one EU Member State and UK and comply with one or more of the following EU Directives and the equivalent UK Statutory Instruments as may be applicable:

RED 2014/53/EU; Low Voltage Directive 2014/35/EU; EMC Directive 2014/30/EU; Ecodesign Directive 2009/125/EC; RoHS Directive 2011/65/EU.

Compliance with these directives is assessed using applicable European Harmonised Standards.

The full EU and UK Declaration of Conformity can be found at the following website: http://www.hp.eu/certificates. Search with the product model name or its Regulatory Model Number (RMN), which may be found on the regulatory label.

The point of contact for regulatory matters: Email reg@hp.com.

Products with radio functionality (EMF)

Use this notice when you need to provide EMF data for radio operation.

This product incorporates a radio transmitting and receiving device. For notebook computers and all-in-one computers in normal use, a separation distance of 20 cm ensures that radio frequency exposure levels comply with EU requirements. Products designed to be operated at closer proximities, such as tablet computers, comply with applicable EU requirements in typical operating positions. Products can be operated without maintaining a separation distance unless otherwise indicated in instructions specific to the product.

Restrictions for products with radio functionality (select products only)

Some products in some countries have restrictions on radio function.



IMPORTANT: IEEE 802.11 wireless LAN with 5.15 GHz–5.35 GHz and/or Wi-Fi 6E Low Power Indoor 5.945 GHz–6.425 GHz (or 5.925 GHz–6.425 GHz in UK) frequency bands are restricted for indoor use only in all countries reflected in the matrix. Using this WLAN application outdoors might lead to interference issues with existing radio services.

Radio frequency bands and maximum power levels (select products and countries only)

The table shows radio frequency bands and maximum power levels for some products and some countries.

Table 2-1 Radio frequency bands and maximum power levels (select products and countries only)

Radio Technology	Maximum Transmit Power EIRP (mW)
Bluetooth; 2.4 GHz	100
NFC; 13.56 MHz	10
RFID; 865–868 MHz/915–921 MHz	2000/4000
WLAN Wi-Fi 802.11; 2.4 GHz, 5 GHz, 6 GHz	100, 200, EU: 200/25 (LPI/VLP), UK: 250/25 (LPI/VLP)
SRD Wi-Fi 802.11; 5725–5875 MHz	25
WWAN 5G NR (450 MHz–7125 MHz)	400
WWAN 4G LTE; 700/800/900/1800/2100/2300/2600/3500 MHz	200
WWAN 3G UTMS; 900/2100 MHz	250

Table 2-1 Radio frequency bands and maximum power levels (select products and countries only) (continued)

Radio Technology	Maximum Transmit Power EIRP (mW)
WWAN 2G GSM GPRS EDGE; 900 MHz	2000
WWAN 2G GSM GPRS EDGE; 1800 MHz	1000
WiGig® 802.11ad; 60 GHz	316

NOTE: Use only HP-supported software drivers and correct country settings to ensure compliance.

Ergonomics notice

When a mobile computer is used at the office workstation for display work tasks where the Visual Display Unit (VDU) Directive 90/270/EEC is applicable, an adequate external keyboard is required. Depending on the application and task, an adequate external monitor may also be necessary to attain working conditions comparable to a workstation setup.

Ref: EK1-ITB 2000 (voluntary GS certification)

Mobile computers bearing the "GS" approval mark meet the applicable ergonomic requirements. Without external keyboards, they are suitable only for short-time use for VDU tasks.

During mobile use with disadvantageous illumination conditions (e.g. direct sunlight) reflections may occur, which result in reduced readability.

A computer system comprising HP brand products meets the applicable ergonomic requirements if all affected constituent products bear the "GS" approval mark, for example Business Desktop PC, keyboard, PC-mouse and monitor.

Please pay attention when installing a dedicated Tower, Micro Tower Business Desktop PC or Workstation that is not intended to be installed/used in the direct field of view at visual display workplaces. To avoid annoying reflections at visual display workplaces, this device must not be placed in the direct field of view.

European telephone network declaration (Modem/Fax)

The product herewith complies with the requirements of the applicable Directive and carries the CE marking accordingly. However, due to differences between the individual PSTNs provided in different countries/regions, the approval does not, of itself, give an unconditional assurance of successful operation on every PSTN network termination point. In the event of problems, you should contact your equipment supplier in the first instance.

Australia and New Zealand notice

This equipment incorporates a radio transmitting and receiving device. In normal use, a separation distance of 20 cm ensures that radio frequency exposure levels comply with the Australian and New Zealand Standards.

The computer must be connected to the Telecommunication Network through a line cord that meets the requirements of AS/CA S008.

WARNING! Modems without integral RJ11 connector that are shipped with this computer should not be installed in any other device.

China WWAN notice

重要信息：本公司建议用户通过官方渠道进行系统更新，非官方渠道的更新可能会带来安全风险。

China radio equipment notice

型号核准代码显示在产品本体的铭牌上

微功率短距离无线电发射设备使用声明

如果适用，使用微功率短距离无线电设备应符合国家无线电管理有关规定。

（一）本产品符合《微功率短距离无线电发射设备目录和技术要求》的具体条款和使用场景。天线类型为内置 FPC 天线，控制、调整及开关等使用方法详见用户手册,使用时温度和电压的环境条件详见用户手册。

（二）不得擅自改变使用场景或使用条件、扩大发射频率范围、加大发射功率（包括额外加装射频功率放大器），不得擅自更改发射天线；

（三）不得对其他合法的无线电台（站）产生有害干扰，也不得提出免受有害干扰保护；

（四）应当承受辐射射频能量的工业、科学及医疗（ISM）应用设备的干扰或其他合法的无线电台（站）干扰；

（五）如对其他合法的无线电台（站）产生有害干扰时，应立即停止使用，并采取措施消除干扰后方可继续使用；

（六）在航空器内和依据法律法规、国家有关规定、标准划设的射电天文台、气象雷达站、卫星地球站（含测控、测距、接收、导航站）等军民用无线电台（站）、机场等的电磁环境保护区域内使用微功率设备，应当遵守电磁环境保护及相关行业主管部门的规定；

（七）禁止在以机场跑道中心点为圆心、半径 5000 米的区域内使用各类模型遥控器。

China Radio Management of Wireless Charging Equipment notice (select products only)

（一）无线充模组由 PCB 板、电磁线圈、电子组件等组成，经过加工成品后，通电时电磁线圈（初级线圈）能产生电磁场。其与无线充电设备使用，利用贴片中的接收线圈（次级线圈）接收无线充电发射板产生电磁声，并将磁能转化为电能。额定传输功率:15W。工作频率范围：120~130KHz。

（二）设备符合国家《无线充电（电力传输）设备无线电管理暂行规定》以及产品质量、电磁辐射和电气安全等法律法规、国家标准等有关规定；

（三）不得擅自改变使用场景或使用条件、扩大工作频率范围、加大传输功率（包括额外加装功率放大器）；

（四）不得对其他合法的无线电业务及台（站）产生有害干扰，也不得提出免受无线电干扰和辐射无线电波干扰的保护要求，如对其他合法的无线电业务及台（站）产生有害干扰时，应立即停止使用，并在采取措施消除有害干扰后方可继续使用；

（五）无线充电设备禁用区域，禁止使用无线充电功能；

（六）使用无线充电设备如对广播业务的接收造成影响，应立即停止使用无线充电设备；

（七）在船舶、航空器和铁路机车（含动车组列车）内使用无线充电设备应当遵守本规定及相关行业主管部门的规定

Japan notice

V-2 規定適合の場合

この装置は、クラス B 情報技術装置です。この装置は、家庭環境で使用することを目的としていますが、この装置がラジオやテレビジョン受信機に近接して使用されると、受信障害を引き起こすことがあります。

取り扱い説明書に従 って正しい取り扱いをして下さい。

VCCI-B

VCCI32-1 規定適合の場合

この装置は、クラス B 機器です。この装置は、住宅環境で使用することを目的としていますが、この装置がラジオやテレビジョン受信機に近接して使用されると、受信障害を引き起こすことがあります。

取り扱い説明書に従 って正しい取り扱いをして下さい。

VCCI-B

5GHz 帯及び 6GHz 帯を使用する特定無線設備は屋内使用に限られています。この機器を屋外で使用することは電波法で禁じられています。

Wireless LAN, Wireless WAN, and Bluetooth® certification markings

この機器は、技術基準適合証明または工事設計認証を受けた無線設備を搭載しています。

This product contains certified radio equipment.



Some products may use electronic regulatory labels (e-labels). To view the certification mark and numbers on an e-label, please refer to the previous “Accessing regulatory labels” section.

一部の製品では、電子規定ラベル（e ラベル）が使用されています。e ラベルの技適マークと認証番号を確認するには、「規定ラベルの確認」の項目をご覧ください

Mexico notice

Declaración para México

La operación de este equipo está sujeta a las siguientes dos condiciones: (1) es posible que este equipo o dispositivo no cause interferencia perjudicial y (2) este equipo o dispositivo debe aceptar cualquier interferencia, incluyendo la que pueda causar su operación no deseada.

Aviso sobre conexiones inalámbricas para México:

En el caso de PC de escritorio, equipos All-in-One, terminales de punto de venta, thin clients y workstations en uso normal e instalados con un dispositivo de transmisión y recepción de radio, una distancia de separación de 20 cm garantiza que los niveles de exposición a radiofrecuencia cumplan con los requisitos de México.

Eurasian Union regulatory notices

The following notices might apply to products sold in the Eurasian Union.

Производитель и дата производства

HP Inc.

Адрес: 1501 Page Mill Road, Palo Alto, California 94304, U.S.

Дата производства зашифрована в 10-значном серийном номере, расположенном на наклейке со служебной информацией изделия.

4-я, 5-я и 6-я цифры обозначают год и неделю производства. 4-я цифра обозначает год, например, «3» обозначает, что изделие произведено в «2013» году.

5-я и 6-я цифры обозначают номер недели в году производства, например, «12» обозначает «12-ю» неделю.

Өндіруші және өндіру мерзімі

HP Inc.

Мекенжайы: 1501 Page Mill Road, Palo Alto, California 94304, U.S.

Өнімнің жасалу мерзімін табу үшін өнімнің қызмет көрсету жапсырмасындағы 10 таңбадан тұратын сериялық нөмірін қараңыз.

4-ші, 5-ші және 6-шы сандар өнімнің жасалған жылы мен аптасын көрсетеді. 4-ші сан жылын көрсетеді, мысалы «3» саны «2013» дегенді білдіреді.

5-ші және 6-шы сандар берілген жылдың қай аптасында жасалғанын көрсетеді, мысалы, «12» саны «12-ші» апта дегенді білдіреді.

Местные представители:

Россия: ООО "ЭйчПи Инк",

Российская Федерация, 125171, г. Москва, Ленинградское шоссе, 16А, стр.3,

телефон/факс: +7 495 797 35 00 / +7 499 92132 50

Казахстан: Филиал компании "ЭйчПи Глобал Трэйдинг Би.Ви.", Республика Казахстан, 050040, г.

Алматы, Бостандыкский район, проспект Аль-Фараби, 77/7,

телефон/факс: +7 727 355 35 52

Жергілікті өкілдіктері:

Ресей: ООО "ЭйчПи Инк",

Ресей Федерациясы, 125171, Мәскеу, Ленинград шоссесі, 16А блок 3,

Телефон/факс: +7 495 797 35 00 / +7 499 92132 50

Қазақстан: "ЭйчПи Глобал Трэйдинг Би.Ви. "компаниясының Қазақстандағы филиалы, Қазақстан

Республикасы, 050040, Алматы к., Бостандық, Әл-

Фараби дан.ылы, 77/7,

Телефон/факс: +7 727 355 35 52

Singapore wireless notice

Turn off any WWAN devices while you are aboard aircraft. The use of these devices aboard aircraft is illegal, may be dangerous to the operation of the aircraft, and may disrupt the cellular network. Failure to observe this instruction may lead to suspension or denial of cellular services to the offender, or legal action, or both.

Users are reminded to restrict the use of radio equipment in fuel depots, chemical plants, and where blasting operations are in progress.

As with other mobile radio transmitting equipment, users are advised that for satisfactory operation of the equipment and for the safety of personnel, no part of the human body should be allowed to come too close to the antennas during operation of the equipment.

This device has been designed to comply with applicable requirements for exposure to radio waves, based on scientific guidelines that include margins intended to assure the safety of all people, regardless of health and age. These radio wave exposure guidelines employ a unit of measurement known as the specific absorption rate (SAR). Tests for SAR are conducted using standardized methods, with the phone transmitting at its highest certified power level in all used frequency bands. The SAR data information is based on CENELEC standards EN50360 and EN50361, which use the limit of 2 watts per kilogram, averaged over 10 grams of tissue.

South Korea notices

무선적용제품

해당 무선설비가 전파혼신 가능성이 있으므로 인명안전과 관련된 서비스는 할 수 없음 (무선모듈 제품이 설치되어 있는 경우).

몸 가까이에서 장치를 작동할 경우 , 비금속 저장 액세서리를 사용하여 장치와 몸 사이에 2.5cm 이상의 거리를 유지하십시오 .

Regulatory submission document

규정 제출 문서

규정 제출 문서에 의거하여 등록자(신청자) 또는 제조업체는 'HP Inc.' 또는 'HP Korea Inc.'입니다.

규정 제출 문서에 의거하여 문서에 포함된 장비명은 '컴퓨터'이며 일반적으로 다음 주요 제품 유형 중 하나로 분류됩니다.

올인원(일체형), 올인원 PC, 올인원 데스크톱 PC

컴퓨터 또는 개인용 컴퓨터

데스크톱 또는 데스크톱 PC

노트북 또는 노트북 PC

태블릿 PC

씬 클라이언트

워크스테이션

RPOS, 소매 시스템, 소매 POS(Point-of-Sale) 터미널

Thailand wireless notice

เครื่องโทรคมนาคมและอุปกรณ์นี้ มีความสอดคล้องตามมาตรฐานหรือข้อกำหนดของ กสทช.

(This telecommunication equipment conforms to the requirements of NBTC.)

เครื่องวิทยุคมนาคมนี้มีระดับการแผ่คลื่นแม่เหล็กไฟฟ้าสอดคล้องตามมาตรฐานความปลอดภัยต่อสุขภาพของมนุษย์จากการใช้เครื่องวิทยุคมนาคมที่คณะกรรมการกิจการโทรคมนาคมแห่งชาติประกาศกำหนด

This radio communication equipment has the electromagnetic field strength in compliance with the Safety Standard for the Use of Radio communication Equipment on Human Health announced by the National Telecommunications Commission.

Taiwan NCC notices

The following notices apply to Taiwan.

無線 LAN 802.11 裝置/藍牙裝置/短距離通訊裝置:

取得審驗證明之低功率射頻器材，非經核准，公司、商號或使用者均不得擅自變更頻率、加大功率或變更原設計之特性及功能。低功率射頻器材之使用不得影響飛航安全及干擾合法通信；經發現有干擾現象時，應立即停用，並改善至無干擾時方得繼續使用。前述合法通信，指依電信管理法規定作業之無線電通信。低功率射頻器材須忍受合法通信或工業、科學及醫療用電波輻射性電機設備之干擾。

應避免影響附近雷達系統之操作。

高增益指向性天線只得應用於固定式點對點系統。

減少電磁波影響，請妥適使用。

Airline travel notice

Use of electronic equipment aboard commercial aircraft is at the discretion of the airline.

User-replaceable battery notices

When a battery has reached the end of its useful life, do not dispose of the battery in general household waste. Follow the local laws and regulations in your area for computer battery disposal.

HP encourages customers to recycle used electronic hardware, HP original print cartridges, and rechargeable batteries. For more information about recycling programs, refer to the HP website at http://www.hp.com/recycle.

For information about removing a user-replaceable battery, refer to the user guide included with the product.

Factory-sealed battery notices

The battery[ies] in this product cannot be easily replaced by users themselves. Removing or replacing the battery could affect your warranty coverage. If a battery is no longer holding a charge, contact support.

When a battery has reached the end of its useful life, do not dispose of the battery in general household waste. Follow the local laws and regulations in your area for battery disposal.

Laser compliance

Use this notice to warn of possible radiation exposure from incorrect laser usage.

⚠ **WARNING!** Use of controls or adjustments, or performance of procedures other than those specified in the laser product installation guide, may result in hazardous radiation exposure. To reduce the risk of exposure to hazardous radiation:

- Do not try to open the module enclosure. There are no user-serviceable components inside.
- Do not operate controls, make adjustments, or perform procedures to the laser device other than those specified in the laser product installation guide.
- Allow only authorized service providers to repair the unit.

This product may be provided with an optical storage device (for example, a CD or DVD drive) and/or a fiber optic transceiver. Each of these devices that contain a laser is classified as a Class 1 Laser Product in accordance with IEC/EN 50689:2021 and meets the requirements for safety of that standard.

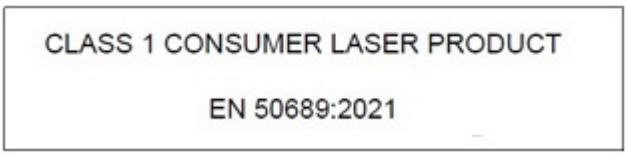

Each laser product complies with US FDA regulations of 21 CFR 1040.10 and 1040.11 or complies with those regulations except for deviations pursuant to Laser Notice No. 50 dated June 24, 2007 or Laser Notice No. 56, dated May 8, 2019.



Telecommunications device approvals

The telecommunications device in the computer is approved for connection to the telephone network in the countries and regions whose approval markings are indicated on the product label located on the bottom of the computer or on the modem.

Refer to the user guide included with the product to ensure that the product is configured for the country or region where the product is located. Selecting a country or region other than the one where it is located may cause the modem to be configured in a way that violates the telecommunication regulations/laws of that country or region. In addition, the modem may not function properly if the correct country or region selection is not made. If, when you select a country or region, a message appears that states that the country or region is not supported, this means that the modem has not been approved for use in this country or region and thus should not be used.

Modem notices

Canada, Japan, New Zealand, and the U.S. have their own sets of modem notices.

U.S. modem statements

This equipment complies with Part 68 of the FCC Rules and the requirements adopted by the ACTA. On the bottom of the computer or on the modem is a label that contains, among other information, a product identifier in the format US:AAAEQ##TXXXX. Provide this information to the telephone company if you are requested to do so.

Applicable certification jack USOC = RJ11C. A plug and jack used to connect this equipment to the premises wiring and telephone network must comply with the applicable FCC Part 68 rules and requirements adopted by the ACTA. A compliant telephone cord and modular plug is provided with this product. It is designed to be connected to a compatible modular jack that is also compliant. See installation instructions for details.

The REN is used to determine the number of devices that may be connected to a telephone line. Excessive RENs on a telephone line may result in the devices not ringing in response to an incoming call. In most but not all locations, the sum of RENs should not exceed five (5.0). To be certain of the number of devices that may be connected to a line, as determined by the total RENs, contact the local telephone company. For products approved after July 23, 2001, the REN for this product is part of the product identifier that has the format US:AAAEQ##TXXXX. The digits represented by ## are the REN without a decimal point (e.g., 03 is a REN of 0.3). For earlier products, the REN is separately shown on the label.

If this HP equipment causes harm to the telephone network, the telephone company will notify you in advance that temporary discontinuance of service may be required. But, if advance notice isn't practical, the telephone company will notify you as soon as possible. Also, you will be advised of your right to file a complaint with the FCC if you believe it is necessary.

The telephone company may make changes to its facilities, equipment, operations, or procedures that could affect the operation of the equipment. If this happens, the telephone company will provide advance notice in order for you to make necessary modifications to maintain uninterrupted telephone service.

If trouble is experienced with this equipment, call technical support. If the equipment is causing harm to the telephone network, the telephone company may request that you disconnect the equipment until the problem is resolved. You should perform repairs only to the equipment specifically discussed in the “Troubleshooting” section of the user guide, if one is provided.

Connection to party line service is subject to state tariffs. Contact the state public utility commission, public service commission, or corporation commission for information.

If your home has specially wired alarm equipment connected to the telephone line, ensure that the installation of this HP equipment does not disable your alarm equipment. If you have questions about what will disable alarm equipment, consult your telephone company or a qualified installer.

The Telephone Consumer Protection Act of 1991 makes it unlawful for any person to use a computer or other electronic device, including a fax machine, to send any message unless such message clearly contains in a margin at the top or bottom of each transmitted page, or on the first page of the transmission, the date and time it is sent and an identification of the business, other entity, or other individual sending the message, and the telephone number of the sending machine or such business, other entity, or individual. The telephone number provided may not be a 900 number or any other number for which charges exceed local or long-distance transmission charges.

In order to program this information into your fax machine, you should complete the steps outlined in the faxing software instructions.

Canada modem statements

This equipment meets the applicable Industry Canada technical specifications.

The Ringer Equivalence Number, REN, is an indication of the maximum number of devices allowed to be connected to a telephone interface. The termination on an interface may consist of any combination of devices, subject only to the requirement that the sum of the RENs of all devices does not exceed 5. The REN for this terminal equipment is 1.0.

Japan modem statements

If the computer does not have the Japanese certification mark on the bottom of the computer, refer to the appropriate certification marking below.

The Japanese certification mark for the V.92 56K Data/Fax Modem is below:



If the computer does not have the Japanese certification mark on the bottom of the computer, refer to the appropriate certification marking below.

The Japanese certification mark for the LSI Corporation PCI-SV92EX Soft modem is below:



New Zealand modem statements

The grant of a Telepermit for any item of terminal equipment indicates only that Telecom has accepted that the item complies with minimum conditions for connection to its network.

It indicates no endorsement of the product by Telecom, nor does it provide any sort of warranty. Above all, it provides no assurance that any item will work correctly in all respects with another item of Telepermitted equipment of a different make or model, nor does it imply that any product is compatible with all of Telecom's network services.

This equipment is not capable, under all operating conditions, of correct operation at the higher speeds for which it is designed. Telecom will accept no responsibility should difficulties arise in such circumstances.

If this device is equipped with pulse dialing, note that there is no guarantee that Telecom lines will always continue to support pulse dialing.

Use of pulse dialing, when this equipment is connected to the same line as other equipment, may give rise to bell tinkle or noise and may also cause a false answer condition. Should such problems occur, the user should *not* contact the Telecom Faults Service.

Some parameters required for compliance with Telecom's Telepermit requirements are dependent on the equipment (PC) associated with this device. The associated equipment shall be set to operate within the following limits for compliance with Telecom's Specifications:

- There shall be no more than 10 call attempts to the same number within any 30-minute period for any single manual call initiation.

- The equipment shall go on-hook for a period of not less than 30 seconds between the end of one attempt and the beginning of the next attempt.
- Where automatic calls are made to different numbers, the equipment shall be set to go on-hook for a period of not less than 5 seconds between the end of one attempt and the beginning of the next attempt.
- The equipment shall be set to ensure that calls are answered between 3 and 30 seconds of receipt of ringing (So set between 2 and 10).

Voice support

All persons using this device for recording telephone conversations shall comply with New Zealand law.

This requires that at least one party to the conversation is aware that it is being recorded. In addition, the Principles enumerated in the Privacy Act 1993 shall be complied with in respect to the nature of the personal information collected, the purpose for its collection, how it is to be used, and what is disclosed to any other party.

This equipment shall not be set to make automatic calls to the Telecom '111' Emergency Service.

Macrovision Corporation notice

This product incorporates copyright protection technology that is protected by method claims of certain U.S. patents and other intellectual property rights owned by Macrovision Corporation and other rights owners.

Use of this copyright protection technology must be authorized by Macrovision Corporation and is intended for home and other limited viewing uses only, unless otherwise authorized by Macrovision Corporation. Reverse engineering or disassembly is prohibited.

3 Safety notices

Your product documentation might require one or more of these safety notices.

Important safety information

These notices could apply to many products.

⚠ **WARNING!** To reduce the risk of serious injury, read the *Safety & Comfort Guide*. It describes proper workstation setup, posture, and health and work habits for computer users, and provides important electrical and mechanical safety information. This guide is located on the web at http://www.hp.com/ergo and on the Documentation CD that is included with the product.

The computer may be heavy; be sure to use ergonomically correct lifting procedures when moving it.

Install the computer near an AC outlet. The AC power cord is your computer's main AC disconnecting device and must be easily accessible at all times. If the power cord provided with your computer has a grounded plug, always use the power cord with a properly grounded AC outlet to avoid the risk of electric shock.

To reduce the possibility of an electric shock from the telephone network, plug your computer into the AC outlet before connecting it to the telephone line. Also, disconnect the telephone line before unplugging your computer from the AC power outlet.

Always disconnect the modem cord from the telephone system before installing or removing your computer cover.

Do not operate the computer with the cover removed.

For your safety, always unplug the computer from its power source and from any telecommunications systems (such as telephone lines), networks, or modems before performing any service procedures. Failure to do so may result in personal injury or equipment damage. Hazardous voltage levels are inside the power supply and modem of this product.

As a safety precaution, if the system power load exceeds the specific configuration's capacities, the system may temporarily disable some USB ports.

⚠ **WARNING!** To reduce the risk of fire, electric shock, and injury to persons when using this device, always follow basic safety precautions, including the following:

- Do not use this product near water—for example, near a bathtub, wash bowl, kitchen sink or laundry tub, in a wet basement, or near a swimming pool.
- Avoid using this product during an electrical storm. There is a remote risk of electric shock from lightning.
- Do not use this product to report a gas leak while in the vicinity of the leak.
- Always disconnect the modem cable before opening the equipment enclosure or touching an uninsulated modem cable, jack, or internal component.
- If this product was not provided with a telephone line cord, use only No. 26 AWG or larger telecommunication line cord.

- Do not plug a modem or telephone cable into the RJ-45 (network) jack.

SAVE THESE INSTRUCTIONS.

IMPORTANT: If your computer is provided with a voltage select switch for use in a 115 or 230 V power system, the voltage select switch has been preset to the correct voltage setting for use in the particular country/region where it was initially sold. Changing the voltage select switch to the incorrect position can damage your computer and void any implied warranty.

This product has not been evaluated for connection to an "IT" power system (an AC distribution system with no direct connection to earth, according to applicable safety standards).

Heat-related safety warning notice

Use this notice if injury from excessive heat is a possibility.

⚠ WARNING! To reduce the possibility of heat-related injuries or of overheating the mobile computer, do not place the mobile computer directly on your lap or obstruct the computer air vents. Use the mobile computer only on a hard, flat surface. Do not allow another hard surface, such as an adjoining optional printer; or a soft surface, such as pillows or rugs or clothing, to block airflow. Also, do not allow the AC adapter to contact the skin or a soft surface, such as pillows or rugs or clothing, during operation. The computer and AC adapter provided by HP comply with the user-accessible surface temperature limits defined by applicable safety standards.

⚠ CAUTION: To reduce the risk of heat-related injuries, do not touch internal hot surfaces until internal surfaces have cooled down to room temperature.

Potential safety conditions notice

Use this notice to warn users about the possibility that a failure was not safe and controlled.

If you notice any of the following conditions (or if you have other safety concerns), do not use the computer: crackling, hissing, or popping sound, or a strong odor or smoke coming from the computer. It is normal for these conditions to appear when an internal electronic component fails in a safe and controlled manner. However, these conditions may also indicate a potential safety issue. Do not assume it is a safe failure. Turn off the computer, disconnect it from its power source, and contact technical support for assistance.

Installation conditions

See installation instructions before connecting this equipment to the input supply.

⚠ WARNING! Energized and moving parts may be inside the computer. Disconnect power to the equipment before removing the enclosure. Replace and secure the enclosure before re-energizing the equipment.

Acoustics notice

Use this notice when the sound pressure level might be lower than recommended or expected.

Sound pressure level (LpA) is far below 70dB(A) (operator position, normal operation, according to ISO 7779). To display product noise emission data, go to "IT ECO Declarations" at http://www.hp.com/go/ted, and then select a product category from the drop-down menu.

Battery notices

One or more of these safety notices might apply to your product's battery.

⚠ **WARNING!** The product may contain an internal lithium manganese dioxide, vanadium pentoxide, or alkaline battery or battery pack. There is risk of fire and burns if the battery pack is not handled properly.

⚠ **WARNING!** Do not attempt to recharge the battery.

⚠ **WARNING!** Do not expose to temperatures higher than 60°C (140°F).

⚠ **WARNING!** To reduce potential safety issues, only the battery provided with the computer, a replacement battery provided by HP, or a compatible battery purchased as an accessory from HP should be used with the computer. Fast charging may not be available for non-compatible or non-HP batteries.

⚠ **WARNING!** To reduce the risk of fire or burns, do not disassemble, crush, puncture, short external contacts, or dispose of in fire or water.

⚠ **WARNING!** Risk of explosion if the battery is replaced by an incorrect type. Dispose of used batteries according to the instructions.

⚠ **WARNING!** Replace only with the HP spare battery designated for this product.

⚠ **WARNING!** Do not ingest the battery, which would be a Chemical Burn Hazard.

⚠ **WARNING!** This product contains a coin/button cell battery. If the coin/button cell battery is swallowed, it can cause severe internal burns in just 2 hours and can lead to death.

⚠ **WARNING!** Select products contain a non-replaceable coin/button cell battery.

⚠ **WARNING!** Keep new and used batteries away from children.

⚠ **WARNING!** If the battery compartment does not close securely, stop using the product and keep it away from children.

⚠ **WARNING!** If you think batteries might have been swallowed or placed inside any part of the body, seek immediate medical attention.

⚠ **WARNING!** Leaving a battery in an environment surrounded by extremely high temperatures can result in an explosion or the leakage of flammable liquid or gas.

⚠ **WARNING!** A battery subjected to extremely low air pressure may result in an explosion or the leakage of flammable liquid or gas.

⚠ **WARNING!** Remove and immediately recycle or dispose of used batteries according to local regulations and keep away from children. Do NOT dispose of batteries in household trash or incinerate.

⚠ **WARNING!** Even used batteries may cause severe injury or death.

⚠ **WARNING!** Call a local poison control center for treatment information.

⚠ **WARNING!** Non-rechargeable batteries are not to be recharged.

⚠ **WARNING!** Do not force discharge, recharge, disassemble, heat above (60°C (149°F).) or incinerate. Doing so may result in injury due to venting, leakage or explosion resulting in chemical burns.

⚠ **WARNING!** Ensure the batteries are installed correctly according to polarity (+ and -).

⚠ **WARNING!** Do not mix old and new batteries, different brands or types of batteries, such as alkaline, carbon-zinc, or rechargeable batteries.

⚠ **WARNING!** Remove and immediately recycle or dispose of batteries from equipment not used for an extended period of time according to local regulations.

⚠ **WARNING!** Always completely secure the battery compartment. If the battery compartment does not close securely, stop using the product, remove the batteries, and keep them away from children.

⚠ **WARNING!** Only replace the battery with a compatible battery type. The compatible battery type for Desktop Workstations, Desktop Computers, and All-in-One Computers is CR2032, for HP Z Captis is CR2025, and for HP Chromebox is ML 1220.

⚠ **WARNING!** The compatible battery type for Notebook ZBook Fury is CR2025, for ZBook Studio, ProBook Fortis, Pro x360 Fortis is CR2016, for EliteBook630/640/650/645/655, ZBook Power, Pro mt440, Elite mt645, ProBook is CR2032 and for EliteBook830/840/860/835/845/865, ZBook Firefly, Elite mt845, Elite x360, Pro x360, EliteBook 1040 is CR1620.

⚠ **WARNING!** The nominal battery voltage is 3V.

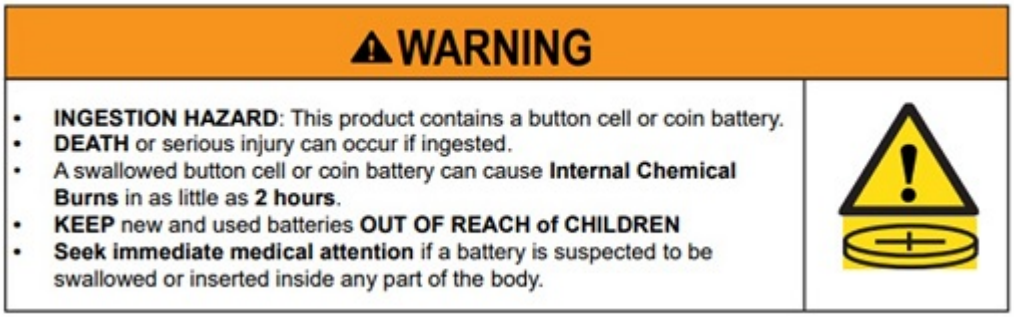

Table 3-1 **Battery disposal icon and description**

Icon	Description
	Batteries, battery packs, and accumulators should not be disposed of with the general household waste. In order to forward them to recycling or proper disposal, please use the public collection system or return them to HP, an authorized HP partner, or their agents.

Fan notices

Use one or more of these notices to warn users about the dangers of injuries from spinning fan blades.

⚠ **WARNING!**  Keep body parts away from moving parts.

⚠ **WARNING!** Keep body parts away from fan blades.

⚠ **WARNING!** Keep body parts out of the motion path.

Headset and earphone volume level notice

This notice warns about the danger of high volume settings for headsets and earphones.

⚠ **WARNING!**  To prevent possible hearing damage, do not listen at high volume levels for long periods.

Adjustment of the volume control as well as the equalizer to other settings than the center position may increase the ear-/headphones output voltage and therefore the sound pressure level. The use of factors influencing the ear-/headphones output other than those specified by the manufacturer (e.g. operating system, equalizer software, firmware, driver) may increase the ear-/headphones output voltage and therefore the sound pressure level.

Laser safety

For products equipped with optical drives or fiber optic transceivers.

This product may be provided with an optical storage device (i.e., CD or DVD drive) and/or fiber optic transceiver. These contain lasers and are classified as Class 1 Laser Products in accordance with the standard IEC/EN 60825-1 and comply with its requirements.

Each laser product complies with US FDA Regulations of 21 CFR 1040.10 and 1040.11 or complies with those regulations except for deviations pursuant to Laser Notice No. 50, dated June 24, 2007 or Laser Notice No. 56, dated May 8, 2019.

⚠ **WARNING!** Use of controls or adjustments or performance of procedures other than those specified herein or in the laser product's installation guide may result in hazardous radiation exposure. To reduce the risk of exposure to hazardous radiation:

- Do not try to open the module enclosure. There are no user-serviceable components inside.
- Do not operate controls, make adjustments, or perform procedures to the laser device other than those specified herein.
- Allow only HP Authorized Service technicians to repair the unit.

Power supply and power cord set requirements

Different countries have different requirements for power supplies and power cords.

Power supply class I grounding requirements

For protection from fault currents, the equipment shall be connected to a grounding terminal. Plug the system power cord into an AC outlet that provides a ground connection. Substitute cords may not provide adequate fault protection. Only use the power cord supplied with this product or an HP Inc. authorized replacement.

Brazil notice

Este equipamento deve ser conectado obrigatoriamente em tomada de rede de energia elétrica que possua aterramento (três pinos), conforme a norma nbr abnt 5410,visando a segurança dos usuários contra choques elétricos.

Denmark

Apparatets stikprop skal tilsluttes en stikkontakt med jord, som giver forbindelse til stikproppens jord.

Finland

Laite on liitettävä suojakoskettimilla varustettuun pistorasiaan.

Norway

Apparatet må tilkoples jordet stikkontakt.

Sweden

Apparaten skall anslutas till jordat uttag.

Power supply requirements

The power supplies on some products have external power switches. The voltage select switch feature on the product permits it to operate from any line voltage between 100-127 or 200-240 volts AC. Power supplies on those products that do not have external power switches are equipped with internal circuits that sense the incoming voltage and automatically switch to the proper voltage.

⚠ **WARNING!** To reduce potential safety issues, HP recommends using only HP-branded AC adapters.

China

消费者若使用电源适配器供电，则应购买配套使用获得 CCC 认证并满足标准要求的电源适配器

For use in Norway

Some products are designed for an IT power system with phase-to-phase voltage 230 V.

Power cord set requirements

One or more of these notices might apply to your product's power cord.

⚠ **WARNING!** To reduce the risk of electric shock or damage to the equipment:

- Plug the power cord into an AC outlet that is easily accessible at all times.
- Disconnect power from the computer by unplugging the power cord from the AC outlet.
- If provided with a 3-pin attachment plug on the power cord, plug the cord into a grounded (earthed) 3-pin outlet. Do not disable the power cord grounding pin, for example, by attaching a 2-pin adapter. The grounding pin is an important safety feature.

The power cord set received with the product meets the requirements for use in the country where the equipment was originally purchased. Use only the power cord provided with the unit or an authorized replacement power cord from HP Inc. or an approved HP Inc. source. Replacement part numbers may be found at http://www.hp.com/support.

Power cord sets for use in other countries must meet the requirements of the country where you use the product. For more information on power cord set requirements, contact your authorized HP dealer, reseller, or service provider.

⚠ **WARNING!** Do not use power cords from other products. Mismatched power cords may result in a shock and fire hazard.

The requirement listed below is applicable to all countries:

- The power cord must be approved by an acceptable accredited agency responsible for evaluation in the country where the power cord set will be installed.

The power cord should be routed so that it is not likely to be walked on or pinched by items placed upon it or against it. Particular attention should be paid to the plug, electrical outlet, and the point where the cord exits from the product.

⚠ **WARNING!** Do not operate this product with a damaged power cord set. If the power cord set is damaged in any manner, replace it immediately. Damaged cords may result in user exposure to hazards.

Power cord notice

If you were not provided with a power cord for the computer or for an external power accessory intended for use with the computer, you should purchase a power cord that is approved for use in your country or region.

The power cord must be rated for the product and for the voltage and current marked on the product's electrical ratings label. The voltage and current rating of the cord should be greater than the voltage and current rating marked on the product. In addition, the diameter of the wire must be a minimum of **0.75 mm²**/18 AWG, and the length of the cord must be between **1.0 m** (3.2 ft) and **2 m** (6.56 ft). If you have questions about the type of power cord to use, contact your authorized service provider.

A power cord should be routed so that it is not likely to be walked on or pinched by items placed upon it or against it. Particular attention should be paid to the plug, electrical outlet, and the point where the cord exits from the product.

DC plug of external HP power supply

The diagram illustrates the DC plug of external HP power supply.

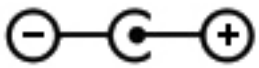

Japan power cord notice

製品には、同梱された電源コードをお使い下さい。

同梱された電源コードは、他の製品では使用出来ません。

Japan power cord requirements

For use in Japan, use only the power cord received with this product.

⚠ **CAUTION:** Do not use the power cord received with this product on any other products.

Pinch hazard

Use this notice to warn about the possibility of pinching injuries.

⚠ **WARNING!** Observe pinch hazard areas. Keep fingers away from closing parts.

TV antenna connectors protection

Several safety notices might apply to TV antenna connectors.

External television antenna grounding

If an outside antenna or cable system is connected to the product, be sure the antenna or cable system is electrically grounded so as to provide some protection against voltage surges and built-up static charges.

Article 810 of the National Electrical Code, ANSI/NFPA 70, provides information with regard to proper electrical grounding of the mast and supporting structure, grounding of the lead-in wire to an antenna-discharge unit, size of grounding conductors, location of antenna-discharge unit, connection to grounding electrodes, and requirements for the grounding electrode.

Lightning protection

For added protection of any product during a lightning storm, or when it is left unattended and unused for long periods of time, unplug the product from the wall outlet and disconnect the antenna or cable system. This will prevent damage to the product from lightning and power line surges.

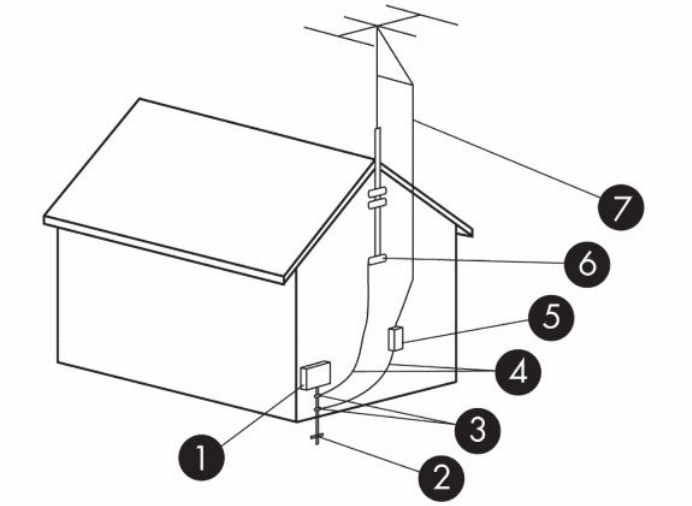

Table 3-2 Antenna Grounding

Reference	Grounding Component
1	Electric Service Equipment
2	Power Service Grounding Electrode System (NEC Art 250, Part III)
3	Ground Clamps
4	Grounding Conductors (NEC Section 810.21)
5	Antenna Discharge Unit (NEC Section 810.20)
6	Ground Clamp
7	Antenna Lead-in Wire

Note to CATV system installer

This reminder is provided to call the CATV systems installer's attention to section 820.93 of the National Electric Code, which provides guidelines for proper grounding and in particular, specify that the Coaxial cable shield shall be connected to grounding system of the building, as close to the point of cable entry as practical.

Travel notice

Use this notice to warn about the possibility of serious injury from voltage converter kits.

⚠ **WARNING!** To reduce the risk of electric shock, fire, or damage to the equipment, do not attempt to power the computer with a voltage converter kit sold for appliances.

China safety notices

HP 工作站使用安全手册

使用须知

欢迎使用惠普工作站，为了您及仪器的安全，请您务必注意如下事项：

1. 仪器要和地线相接，要使用有正确接地插头的电源线，使用中国国家规定的 220V 电源。
2. 避免高温和尘土多的地方，否则易引起仪器内部部件的损坏。
3. 避免接近高温，避免接近直接热源，如直射太阳光、暖气等其它发热体。
4. 不要有异物或液体落入机内，以免部件短路。
5. 不要将磁体放置于仪器附近。

警告

为防止火灾或触电事故，请不要将该机放置于淋雨或潮湿处

如果您按照以上步骤操作时遇到了困难，或想了解其它产品性能，请在以下网页上寻找相关信息：http://www.hp.com.cn

或联系我们

中国惠普有限公司
地址：北京朝阳区建国路 112 号中国惠普大厦
电话：010-65643888

China altitude notice

海拔警告仅适用于在海拔 2000m 及以下地区使用的产品



海拔警告仅适用于在海拔 2000m 及以下地区使用的产品。

China tropical warning notice

热带警告仅适用于在非热带气候条件下使用的产品。



热带警告仅适用于在非热带气候条件下使用的产品。

Norway and Sweden cable grounding notice for products with a TV tuner

Norway and Sweden require a galvanic isolator for grounding.

⚠ CAUTION: To reduce potential safety issues, use a galvanic isolator when connecting to a cable distribution system.

Taiwan eyesight notice

This eyesight notice applies to products in Taiwan.

使用過度恐傷害視力

注意事項:

(1) 使用 30 分鐘請休息 10 分鐘。

(2) 未滿 2 歲幼兒不看螢幕，2 歲以上每天看螢幕不要超過 1 小時。

4 Environmental notices

This chapter provides country- and region-specific environmental notices and compliance information. Some of these notices may not apply to your product.

Electronic hardware, packaging and battery recycling

HP encourages customers to recycle used electronic hardware, HP original print cartridges packaging, and rechargeable batteries.

For more information about recycling programs, go to http://www.hp.com/recycle.

For information about recycling the product in Japan, refer to http://www.hp.com/jp/hardwarerecycle/.

Disposal of waste equipment by users

Use this notice to explain the icon associated with waste disposal.

Table 4-1 Disposal of waste equipment icon and its description

Icon	Description
	This symbol means do not dispose of your product with your other household waste. Instead, you should protect human health and the environment by handing over your waste equipment to a designated collection point for the recycling of waste electrical and electronic equipment. For more information, please contact your household waste disposal service or go to http://www.hp.com/recycle.

Brazil alkaline battery disposal

Não descarte o produto eletrônico em lixo comum



Este produto eletroeletrônico e seus componentes não daven ser descartados no lixo comum, pois embora estejam em conformidade com padrões mundiais de restrição a substâncias nocivas, podem conter, ainda que em quantidades mínimas, substâncias impactantes ao meio ambiente. Ao final da vida útil deste produto, o usuário deverá entregá-lo à HP. A não observância dessa orientação sujeitará o infrator às sanções previstas em lei. Após o uso, as pilhas e/ou baterias dos produtos HP deverão ser entregues ao estabelecimento comercial ou rede de assistência técnica autorizada pela HP.

Para maiores informações , inclusive sobre os pontos de recebimento, acesse: http://www.hp.com.br/reciclar

Brazil hardware recycling information

Não descarte o produto eletrônico em lixo comum



Este produto eletroeletrônico e seus componentes não daven ser descartados no lixo comum, pois embora estejam em conformidade com padrões mundiais de restrição a substâncias nocivas, podem conter, ainda que em quantidades mínimas, substâncias impactantes ao meio ambiente. Ao final da vida útil deste produto, o usuário deverá entregá-lo à HP. A não observância dessa orientação sujeitará o infrator às sanções previstas em lei. Após o uso, as pilhas e/ou baterias dos produtos HP deverão ser entregues ao estabelecimento comercial ou rede de assistência técnica autorizada pela HP.

Para maiores informações , inclusive sobre os pontos de recebimento, acesse: http://www.hp.com.br/reciclar

France Triman WEEE and recycling label

Use this notice to explain the icon associated with recycling.



Korea disposal and recycling notices

한국 전자제품 폐기 및 재활용 방법

전자 기기 폐기물은 전자/전기 장비를 재활용할 수 있도록 지정된 HP 수거물 센터에 전달하거나 E-순환거버넌스(http://www.k-erc.or.kr/)를 통해 무상 회수 및 재활용이 진행됩니다. 자세한 내용은 E-순환 거버넌스 혹은 HP 서비스 센터에 문의하거나 웹사이트 www.hp.com/recycle을참조하십시오.

Taiwan battery recycling information

This notice provides the regulations for battery manufacture and recycling in Taiwan.

Table 4-2 **Taiwan battery recycling icon and its description**

Icon	Description
	The Taiwan EPA requires dry battery manufacturing or importing firms, in accordance with Article 15 of the Waste Disposal Act, to indicate the recovery marks on the batteries used in sales, giveaways, or promotions. Contact a qualified Taiwanese recycler for proper battery disposal.

Turkey WEEE regulation

Türkiye Cumhuriyeti: AEEE Yönetmeliğine Uygundur

ENERGY STAR® Certification (select products only)

ENERGY STAR is a U.S. Environmental Protection Agency voluntary program that helps businesses and individuals save money and protect our climate through superior energy efficiency.

Products that earn the ENERGY STAR prevent greenhouse gas emissions by meeting strict energy efficiency criteria or requirements set by the U.S. Environmental Protection Agency. As an ENERGY STAR Partner, HP Inc. has followed the U.S. EPA's enhanced product certification process to ensure that products marked with the ENERGY STAR logo are ENERGY STAR certified per the applicable ENERGY STAR guidelines. The following logo appears on all ENERGY STAR-certified computers:



A key ENERGY STAR requirement for computer products is power management features that significantly reduce energy consumption when the product is not in use. Power management allows a computer to automatically enter a low power "sleep" mode, or other low power mode, after a defined period of inactivity. The power management features have been preset as follows when the computer is operating on AC power:

Table 4-3 Preset power management features when the computer is operating on AC power

Computer type	Time to activate display sleep mode	Time to activate computer sleep mode (minutes)	Resuming from sleep mode
Notebooks, Mobile Workstations	Less than or equal to 15 minutes (varies by model)	Less than or equal to 30 minutes (varies by model)	Product will exit sleep mode when the power/sleep button is pressed. If Wake-on-Lan (WOL) is enabled, the system can resume from sleep in response to a network signal.
Tablets/Slates	Less than or equal to 1 minute	Not applicable	Not applicable
Desktops, Integrated Desktops, Workstations	Less than or equal to 15 minutes (varies by model)	Less than or equal to 30 minutes (varies by model)	Product will exit sleep mode when user interacts with any input device, including the mouse or keyboard. If Wake-on-Lan (WOL) is enabled, the system can resume from sleep in response to a network signal.
Thin clients	Less than or equal to 15 minutes (varies by model)	Less than or equal to 30 minutes when sleep mode is supported by the operating system (varies by model)	When sleep mode is supported by operating system product will exit sleep mode when user interacts with any input device, including the mouse or keyboard. If Wake-on-Lan (WOL) is enabled, the system can resume from sleep in response to a network signal.

For computers that support an always-on, always-connected use profile where internet access is available (such as tablets and slates), alternative low power modes - such as Short or Long Idle modes (as defined in the ENERGY STAR Computer Program Requirements) are provided that consume very little power (</= 10 Watts) and when applicable, maximize product battery life. These alternative low power modes are dynamic, with the display sleep mode activated within 1 minute of user inactivity.

The computer exits Sleep when the power/Sleep button is pressed. When the Wake On LAN (WOL) feature is enabled, the computer can also exit Sleep in response to a network signal.

Additional information on the potential energy and financial savings of the power management feature can be found on the EPA ENERGY STAR Power Management website at https://www.energystar.gov/products/ask-the-experts/how-optimize-power-management-settings-savings .

Additional information on the ENERGY STAR program and its environmental benefits are available on the EPA ENERGY STAR website at http://www.energystar.gov.

ENERGY STAR and the ENERGY STAR mark are registered trademarks owned by the U.S. Environmental Protection Agency.

Chemical substances

HP is committed to providing our customers with information about the chemical substances in our products as needed to comply with legal requirements such as REACH (Regulation EC No. 1907/2006 of the European Parliament and the Council).

A chemical information report for this product can be found at http://www.hp.com/go/reach.

Perchlorate material-special handling may apply

The computer's real-time clock battery may contain perchlorate and may require special handling when recycled or disposed of in California.

See https://dtsc.ca.gov/perchlorate/.

China environmental notices

回收信息说明

惠普公司对废弃的电子计算机（笔记本电脑）提供回收服务，更多信息请登陆

http://www8.hp.com/us/en/hp-information/environment/product-recycling.html

环境标志信息

微型计算机(台式计算机,笔记本电脑等)及显示器在中国环境标志认证产品范围内,环境标志表明该产品不仅品质合格,而且在生产,使用和回收处理中都符合特定的环境保护要求,与同类产品相比,既有低毒少害,节约资源等环保优势,此外获得中国环境标志认证的产品售后三年内均可在各服务中心选择维修或更换部件,也可通过更换更高性能的零部件或模块实现硬件升级。

特别提醒

如您需要确认本产品处于零能耗状态,请按下电源关闭按钮,并将插头从电源插座断开。

China PC energy label

China requires this notice of energy efficiency.

In accordance with "The Regulation of the Implementation on China Energy Label for Microcomputers," this microcomputer has an Energy Efficiency Label. The energy efficiency grade, TEC (Typical Energy Consumption), and product category presented on the label are determined and calculated according to the standard GB28380-2012.

1. Energy Efficiency Grades

   The grade is determined by the standard with the calculation of base consumption level with the sum of all the allowances for additional components such as main memory and graphics card. For products of any grade, the TEC should not exceed the value specified in the following table:

Table 4-4 Typical Energy Consumption (TEC) values

Product Type		TEC (kilowatt hour)		
		Grade 1	Grade 2	Grade 3
Desktop microcomputer, AIO	Category A	98.0+∑Efa	148.0+∑Efa	198.0+∑Efa
	Category B	125.0+∑Efa	175.0+∑Efa	225.0+∑Efa
	Category C	159.0+∑Efa	209.0+∑Efa	259.0+∑Efa
	Category D	184.0+∑Efa	234.0+∑Efa	284.0+∑Efa
Portable Computer	Category A	20.0+∑Efa	35.0+∑Efa	45.0+∑Efa
	Category B	26.0+∑Efa	45.0+∑Efa	65.0+∑Efa
	Category C	54.5+∑Efa	75.0+∑Efa	123.5+∑Efa

NOTE: ∑Efa is the sum of power factor of product additional functions.

2. Typical Energy Consumption

   The energy consumption figure presented on the label is the data measured with the representative configuration that covers all the configurations in the registration unit which is selected according to "The Regulation of the Implementation on China Energy Label for

Microcomputers." Thus, actual energy consumption of this specific microcomputer may not be the same as the TEC data presented in the label.

3. Product Category

The product category is determined by the standard according to the microcomputer's configuration. The categorization of products complies with the regulations in the following table:

Table 4-5 Product category and configuration description

Product Type	Configuration Description	
	Desktop microcomputer, AIO	Portable Computer
Category A	The desktop microcomputer and AIO whose configuration is out of the scope of Category B, C, and D	The portable computer whose configuration is out of the scope of Category B and C
Category B	CPU physical core number of 2, and system memory of not less than 2 GB	A Discrete GPU
Category C	CPU physical core number of over 2, with at least one of the following features: 1. System memory of not less than 2 GB 2. A Discrete GPU	The product that has a CPU physical core number of not less than 2, system memory of not less than 2GB, A Discrete GPU with Frame Buffer Width not less than 128-bit.
Category D	CPU physical core number of not less than 4, with at least one of the following features: 1. System memory of not less than 4 GB 2. A Discrete GPU with Frame Buffer Width not less than 128-bit	

For more details on the specification, please refer to the standard GB28380-2012.

本机根据《微型计算机能源效率标识实施规则》的要求加施中国能效标识。能效标识中显示的能效等级、典型能源消耗和产品类型均根据《微型计算机能效限定值及能效等级》(GB28380-2012)的要求确定。对上述标识内容的说明如下:

1. 能效等级

微型计算机的能效等级由基础能源消耗值和附加功能功耗因子之和决定。微型计算机能效各等级的典型能源消耗应不大于下表的规定

微型计算机类型			能源消耗(千瓦时)		
			1	2	3
	台式微型计算机及	A 类	98.0+ΣEfa	148.0+ΣEfa	198.0+ΣEfa
一体机		B 类	125.0+ΣEfa	175.0+ΣEfa	225.0+ΣEfa
		C 类	159.0+ΣEfa	209.0+ΣEfa	259.0+ΣEfa
		D 类	184.0+ΣEfa	234.0+ΣEfa	284.0+ΣEfa
	便携式	A 类	20.0+ΣEfa	35.0+ΣEfa	45.0+ΣEfa
计算机		B 类	26.0+ΣEfa	45.0+ΣEfa	65.0+ΣEfa
		C 类	54.5+ΣEfa	75.0+ΣEfa	123.5+ΣEfa
注：ΣEfa 为微型计算机附加功能功耗因子之和					

2. 典型能源消耗

典型能源消耗值代表一个备案单元中，符合《微型计算机能源效率标识实施规则》要求的代表性规格型号产品的数值。因此，本机的典型能源消耗值可能与其所加施的能效标识中所示的典型能源消耗值不一致。

3. 产品类型

产品类型根据微型计算机的配置确定。参见下表：

类型	配置说明	
	台式微型计算机及一体机	便携式计算机
A 类	下列 B 类、C 类、D 类配置以外的台式微型计算机及一体机	下列 B 类、C 类配置以外的便携式计算机
B 类	中央处理器（CPU）物理核心数为 2，系统内存大于等于 2GB	具有独立图形显示单元（GPU）
C 类	中央处理器（CPU）物理核心数大于 2，且至少具有以下特征中的一条 a. a）系统内存大于等于 2GB； b. 独立图形显示单元（GPU）	中央处理器（CPU）物理核心数大于等于 2，系统内存大于等于 2GB，具有独立图形显示单元（GPU）且显存位宽大于等于 128 位.
D 类	中央处理器（CPU）物理核心数大于等于 4，且至少具有以下特征中的一条： a. 系统内存大于等于 4GB； b. 具有独立图形显示单元（GPU）且显存位宽大于等于 128 位	

关于标识内容的更详细技术信息，请参考《微型计算机能效限定值及能效等级》（GB28380-2012）

China RoHS

China uses the following notices for RoHS.

笔记本电脑和平板电脑产品中有害物质或元素的名称及含量

根据中国《电器电子产品有害物质限制使用管理办法》





Table 4-6 产品中有害物质或元素的名称及含量 根据中国《电器电子产品有害物质限制使用管理办法》

	有害物质					
部件名称	铅 (Pb)	汞 (Hg)	镉 (Cd)	六价铬 (Cr(VI))	多溴联苯 (PBB)	多溴二苯醚 (PBDE)
电池	X	O	O	O	O	O
线缆	X	O	O	O	O	O
摄像头	X	O	O	O	O	O
机箱/其他	X	O	O	O	O	O
闪存读卡器	X	O	O	O	O	O
软盘驱动器	X	O	O	O	O	O
硬盘驱动器	X	O	O	O	O	O
耳机	X	O	O	O	O	O
I/O PCA	X	O	O	O	O	O
键盘	X	O	O	O	O	O
液晶显示器 (LCD) 面板	X	O	O	O	O	O
介质（CD/DVD/软盘）	O	O	O	O	O	O
内存	X	O	O	O	O	O
主板、处理器、散热器	X	O	O	O	O	O
鼠标	X	O	O	O	O	O
光盘驱动器	X	O	O	O	O	O
对接设备选件	X	O	O	O	O	O
电源适配器	X	O	O	O	O	O
电源	X	O	O	O	O	O
电源组	X	O	O	O	O	O
投影仪	X	O	O	O	O	O
遥控器	X	O	O	O	O	O

Table 4-6 产品中有害物质或元素的名称及含量 根据中国《电器电子产品有害物质限制使用管理办法》(continued)

	有害物质					
部件名称	铅 (Pb)	汞 (Hg)	镉 (Cd)	六价铬 (Cr(VI))	多溴联苯 (PBB)	多溴二苯醚 (PBDE)
智能卡/Java™ 读卡器	X	O	O	O	O	O
扬声器(外置)	X	O	O	O	O	O
电视调谐器	X	O	O	O	O	O
USB 闪存驱动器	X	O	O	O	O	O
USB 集线器	X	O	O	O	O	O
网络摄像头	X	O	O	O	O	O
无线接收器	X	O	O	O	O	O
无线网卡	X	O	O	O	O	O
本表格依据 SJ/T 11364 的规定编制。 O:表示该有害物质在该部件所有均质材料中的含量均在 GB/T 26572 规定的限量要求以下。 X:表示该有害物质至少在该部件的某一均质材料中的含量超出 GB/T 26572 规定的限量要求。 此表中所有名称中含 "X" 的部件均符合中国 RoHS 达标管理目录限用物质应用例外清单的豁免。 此表中所有名称中含 "X" 的部件均符合欧盟 RoHS 立法。 注:环保使用期限的参考标识取决于产品正常工作的温度和湿度等条件						

台式机、瘦客户端、个人工作站、一体机和销售点终端产品中有害物质或元素的名称及含量

根据中国《电器电子产品有害物质限制使用管理办法》





Table 4-7 产品中有害物质或元素的名称及含量 根据中国《电器电子产品有害物质限制使用管理办法》

	有害物质					
部件名称	铅 (Pb)	汞 (Hg)	镉 (Cd)	六价铬 (Cr(VI))	多溴联苯 (PBB)	多溴二苯醚 (PBDE)
电池	X	O	O	O	O	O
线缆	X	O	O	O	O	O
摄像头	X	O	O	O	O	O
机箱/其他	X	O	O	O	O	O

Table 4-7 产品中有害物质或元素的名称及含量 根据中国《电器电子产品有害物质限制使用管理办法》(continued)

	有害物质					
部件名称	铅 (Pb)	汞 (Hg)	镉 (Cd)	六价铬 (Cr(VI))	多溴联苯 (PBB)	多溴二苯醚 (PBDE)
风扇	X	O	O	O	O	O
闪存读卡器	X	O	O	O	O	O
软盘驱动器	X	O	O	O	O	O
硬盘驱动器	X	O	O	O	O	O
耳机	X	O	O	O	O	O
散热器	X	O	O	O	O	O
I/O PCA	X	O	O	O	O	O
键盘	X	O	O	O	O	O
液晶显示器 (LCD) 面板	X	O	O	O	O	O
介质（CD/DVD/软盘）	O	O	O	O	O	O
内存	X	O	O	O	O	O
主板、处理器、散热器	X	O	O	O	O	O
鼠标	X	O	O	O	O	O
光驱	X	O	O	O	O	O
对接设备选件	X	O	O	O	O	O
电源适配器	X	O	O	O	O	O
电源	X	O	O	O	O	O
投影仪	X	O	O	O	O	O
遥控器	X	O	O	O	O	O
智能卡/Java™ 读卡器	X	O	O	O	O	O
固态驱动器	X	O	O	O	O	O
扬声器（外置）	X	O	O	O	O	O
触控笔	X	O	O	O	O	O
触控板	X	O	O	O	O	O
电视调谐器	X	O	O	O	O	O
USB 闪存驱动器	X	O	O	O	O	O
USB 集线器	X	O	O	O	O	O
网络摄像头	X	O	O	O	O	O
无线接收器	X	O	O	O	O	O
无线网卡	X	O	O	O	O	O
3D 捕获台/转盘	X	O	O	O	O	O

Table 4-7 产品中有害物质或元素的名称及含量 根据中国《电器电子产品有害物质限制使用管理办法》(continued)

	有害物质					
部件名称	铅 (Pb)	汞 (Hg)	镉 (Cd)	六价铬 (Cr(VI))	多溴联苯 (PBB)	多溴二苯醚 (PBDE)
本表格依据 SJ/T 11364 的规定编制。 O：表示该有害物质在该部件所有均质材料中的含量均在 GB/T 26572 规定的限量要求以下。 X：表示该有害物质至少在该部件的某一均质材料中的含量超出 GB/T 26572 规定的限量要求。 此表中所有名称中含 "X" 的部件均符合中国 RoHS 达标管理目录限用物质应用例外清单的豁免。 此表中所有名称中含 "X" 的部件均符合欧盟 RoHS 立法。 注：环保使用期限的参考标识取决于产品正常工作的温度和湿度等条件						

台灣針對筆記型電腦和平板電腦的有害物質限制使用管理辦法 (RoHS)

限用物質含有情況標示聲明書

Declaration of the Presence Condition of the Restricted Substances Marking

Table 4-8 限用物質含有情況標示聲明書 Declaration of the Presence Condition of the Restricted Substances Marking

限用物質及其化學符號 Restricted substances and its chemical symbols						
單元 Unit	鉛 Lead (Pb)	汞 Mercury (Hg)	鎘 Cadmium (Cd)	六價鉻 Hexavalent chromium (Cr^{+6})	多溴聯苯 Polybrominated biphenyls (PBB)	多溴二苯醚 Polybrominated diphenyl ethers (PBDE)
纜線 Cables	–	○	○	○	○	○
機殼/其他 Chassis/Other	–	○	○	○	○	○
輸入/輸出印刷電路組件 I/O PCAs	–	○	○	○	○	○
液晶顯示器 (LCD) 面板 Liquid crystal display (LCD) panel	–	○	○	○	○	○
記憶體 Memory	○	○	○	○	○	○
主機板、處理器、散熱器 Motherboard, processor, heat sinks	–	○	○	○	○	○
電源組 Power pack	–	○	○	○	○	○

Table 4-8 **限用物質含有情況標示聲明書 Declaration of the Presence Condition of the Restricted Substances Marking (continued)**

限用物質及其化學符號 Restricted substances and its chemical symbols						
電源供應器 Power supply	–	○	○	○	○	○
儲存裝置 Storage Devices	–	○	○	○	○	○
無線裝置 Wireless Devices	–	○	○	○	○	○

備考 1:「超出 0.1 %」及「超出 0.01 %」係指限用物質之百分比含量超出百分比含量基準值。

Note 1: "Exceeding 0.1 wt %" and "exceeding 0.01 wt %" indicate that the percentage content of the restricted substance exceeds the reference percentage value of presence condition.

備考 2:「○」係指該項限用物質之百分比含量未超出百分比含量基準值。

Note 2: "○" indicates that the percentage content of the restricted substance does not exceed the percentage of reference value of presence.

備考 3:「–」係指該項限用物質為排除項目。

Note 3: The "–" indicates that the restricted substance corresponds to the exemption.

若要取得最新版使用指南，請前往 http://www.hp.com/support，並依照指示尋找您的產品。然後選取「使用手冊」。

To access the latest user guides, go to http://www.hp.com/support, and follow the instructions to find your product. Then select **Manuals**.

台灣針對桌上型電腦、精簡型電腦、個人工作站、一體成形電腦及銷售點終端機的有害物質限制使用管理辦法 (RoHS)

限用物質含有情況標示聲明書

Declaration of the Presence Condition of the Restricted Substances Marking

Table 4-9 **限用物質含有情況標示聲明書 Declaration of the Presence Condition of the Restricted Substances Marking**

限用物質及其化學符號 Restricted substances and its chemical symbols						
單元 Unit	**鉛 Lead (Pb)**	**汞 Mercury (Hg)**	**鎘 Cadmium (Cd)**	**六價鉻 Hexavalent chromium (Cr^{+6})**	**多溴聯苯 Polybrominated biphenyls (PBB)**	**多溴二苯醚 Polybrominated diphenyl ethers (PBDE)**
纜線 Cables	–	○	○	○	○	○
機座/其他 Chassis/Other	–	○	○	○	○	○

Table 4-9 限用物質含有情況標示聲明書 Declaration of the Presence Condition of the Restricted Substances Marking (continued)

限用物質及其化學符號 Restricted substances and its chemical symbols						
單元 Unit	鉛 Lead (Pb)	汞 Mercury (Hg)	鎘 Cadmium (Cd)	六價鉻 Hexavalent chromium (Cr^{+6})	多溴聯苯 Polybrominated biphenyls (PBB)	多溴二苯醚 Polybrominated diphenyl ethers (PBDE)
輸入/輸出印刷電路組件 I/O PCAs	–	○	○	○	○	○
液晶顯示器 (LCD) 面板 Liquid crystal display (LCD) panel (for AIO only)	–	○	○	○	○	○
記憶體 Memory	○	○	○	○	○	○
主機板、處理器、散熱器 Motherboard, processor, heat sinks	–	○	○	○	○	○
電源供應器 Power supply	–	○	○	○	○	○
儲存裝置 Storage Devices	–	○	○	○	○	○

備考 1:「超出 0.1 %」及「超出 0.01 %」係指限用物質之百分比含量超出百分比含量基準值。

Note 1: "Exceeding 0.1 wt %" and "exceeding 0.01 wt %" indicate that the percentage content of the restricted substance exceeds the reference percentage value of presence condition.

備考 2:「○」係指該項限用物質之百分比含量未超出百分比含量基準值。

Note 2: "○" indicates that the percentage content of the restricted substance does not exceed the percentage of reference value of presence.

備考 3:「–」係指該項限用物質為排除項目。

Note 3: The "–" indicates that the restricted substance corresponds to the exemption.

若要取得最新版使用指南，請前往 http://www.hp.com/support，並依照指示尋找您的產品。然後選取「使用手冊」。

To access the latest user guides, go to http://www.hp.com/support, and follow the instructions to find your product. Then select **Manuals**.

India restriction of hazardous substances (RoHS)

This product, as well as its related consumables and spares, complies with the reduction in hazardous substances provisions of the "India E-waste Rule 2016."

It does not contain lead, mercury, hexavalent chromium, polybrominated biphenyls or polybrominated diphenyl ethers in concentrations exceeding 0.1 weight % and 0.01 weight % for cadmium, except where allowed pursuant to the exemptions set in Schedule 2 of the Rule.

Information for European Union Commission Regulation 1275/2008

The European Union requires this notice about power consumption.

To locate product power consumption data, including when the product is in networked standby with all wired network ports connected and wireless devices connected, refer to section P14 “Additional information” of the product IT ECO Declaration at http://www.hp.com/hpinfo/globalcitizenship/environment/productdata/itecodesktop-pc.html.

Where applicable, activate and deactivate a wireless network using the instructions included in the product user guide or the operating system. Information is also available at http://www.hp.com/support.

IT ECO declarations

Use these links to provide locations for IT ECO declarations.

Notebook or tablet PCs

Desktop PCs and Thin Clients

Workstations

Japan restriction of hazardous substances (RoHS)

2008 年、日本における製品含有表示方法、JISC0950 改定版が公示されました。製造事業者は、2006 年 7 月 1 日以降に販売される電気・電子機器の特定化学物質の含有に付きまして情報提供を義務付けられています。

製品の部材表示に付きましては、http://www.hp.com/go/jisc0950/ を参照してください。

A Japanese regulatory requirement, defined by specification JIS C 0950, 2008, mandates that manufacturers provide Material Content Declarations for certain categories of electronic products offered for sale after July 1, 2006.

To view the JIS C 0950 material declaration for this product, visit http://www.hp.com/go/jisc0950.

Ley para el Aprovechamiento Sustentable de la Energía de México

Ley para el Aprovechamiento Sustentable de la Energía de México

Se ha etiquetado este producto en conformidad con la Ley para el Aprovechamiento Sustentable de la Energía de México, que requiere la divulgación del consumo de energía del modo de uso normal (modo inactivo) y del modo de espera. Su producto es una de las muchas configuraciones de esta familia de modelos; el consumo de energía del modo inactivo de su configuración específica puede diferir de la información de la etiqueta. El consumo real de energía de su producto puede ser mayor o menor que el valor informado en la etiqueta de energía de producto para México a causa de factores como la configuración (componentes y módulos seleccionados) y el uso (tareas que se están efectuando, software instalado y en ejecución, etc.).

NOTE: Esta ley no es aplicable a las estaciones de trabajo.

TCO Certified

This section applies only to products bearing the TCO Certified logo.

See https://tcocertified.com/product-finder/ to see a list of TCO Certified products.

A third-party certification according to ISO 14024

Toward sustainable IT products



Say hello to a more sustainable product

IT products are associated with a wide range of sustainability risks throughout their life cycle. Human rights violations occur in the supply chain. Harmful substances are used both in products and their manufacture. Products can often have a short lifespan because of poor ergonomics, low quality and when they are not able to be repaired or upgraded.

This product is a better choice. It meets all the criteria in TCO Certified, the world's most comprehensive sustainability certification for IT products. Thank you for making a responsible product choice, that help drive progress towards a more sustainable future!

Criteria in TCO Certified have a life-cycle perspective and balance environmental and social responsibility. Conformity is verified by independent and approved verifiers that specialize in IT products, social responsibility or other sustainability issues. Verification is done both before and after the certificate is issued, covering the entire validity period. The process also includes ensuring that corrective actions are implemented in all cases of factory non-conformities. And last but not least, to make sure that the certification and independent verification is accurate, both TCO Certified and the verifiers are reviewed regularly.

Want to know more?

Read information about TCO Certified, full criteria documents, news and updates at **tcocertified.com.** On the website you'll also find our Product Finder, which presents a complete, searchable listing of certified products.

TCO Certified Edge

This section applies only to products bearing the TCO Certified Edge logo.

See https://tcocertified.com/product-finder/ to see a list of TCO Certified Edge products.

A third-party certification according to ISO 14024

Toward sustainable IT products



Say hello to a more sustainable product

IT products are associated with a wide range of sustainability risks throughout their life cycle. Human rights violations occur in the supply chain. Harmful substances are used both in products and their manufacture. Products can often have a short lifespan because of poor ergonomics, low quality and when they are not able to be repaired or upgraded.

This product is a better choice. It meets all the criteria in TCO Certified, the world's most comprehensive sustainability certification for IT products. Additionally, it fulfills the requirements of TCO Certified Edge, the supplemental certification that recognizes leading-edge products that exceed typical performance in a particular sustainability attribute. At our Product Finder **(tcocertified.com/product-finder)** you can find out which TCO Certified Edge criterion or criteria this product meets.

Criteria in TCO Certified have a life-cycle perspective and balance environmental and social responsibility. Compliance is verified by independent verification organizations that specialize in IT products, social responsibility or other sustainability issues. Verification is done both before and after the certificate is issued, covering the entire validity period. The process also includes ensuring that corrective actions are implemented in all cases of factory non-conformities.

Thank you for making a responsible product choice, that help drive progress towards a more sustainable future!

Want to know more?

Read information about TCO Certified, full criteria documents, news and updates at **tcocertified.com.** On the website you'll also find our Product Finder, which presents a complete, searchable listing of certified products.

Index

A

airline travel notice 13
altitude notice 26
Aviso para o Brasil 6
avisos
  Brasil 6

B

battery 20
battery notice 13, 28
battery recycling 28
Belarus regulatory notice 5
Brazil notice 6, 22

C

cable grounding notice 27
Canada modem statement 15
Canada notices 6
China environmental notices 31
China PC energy label 32
Class A product notice, Australia 5
Class A product notice, European Union and UK 5

D

disposal notices
  battery 28
  battery, user replacement 13
  equipment 28
  factory sealed battery 13

E

electronic hardware and battery recycling 28
ENERGY STAR certification 30
environmental notices 28
equipment disposal notice 28
ergonomics notice 8
European Union Commission Regulation 1275/2008 41

F

fan notice 21
Federal Communications Commission
  notebook computers
    cables 3, 4
  notebook computers Class A notice 4
  notebook computers Class B notice 3
  notebook computers modifications 3, 4

G

Global Class A notices 4
  cables 4
  modifications 4
GS Notice 8

H

headset and earphone volume level notice 21

I

India restriction of hazardous substances notice 40

J

Japan modem statement 16
Japan notice 10
Japan power cord notice 24
Japan restriction of hazardous substances notice 41

K

Korea disposal and recycling notice 29

L

labels, regulatory 2
laser safety notice 14, 22

M

Macrovision Corporation notice 17
maximum power levels 7
Mexico wireless notice 10
modem notices 14
modem statements
  Canada 15
  Japan 16
  New Zealand 16
  U.S. 15
modifications, notebook computers
  Federal Communications Commission 3

N

New Zealand modem statement 16
notices
  airline travel 13
  battery 13, 20, 28
  Belarus regulatory 5
  Brazil 6, 22
  Canada 6
  environmental 28
  equipment disposal 28
  ergonomics 8
  fan 21
  headset and earphone volume level 21
  India restriction of hazardous substances 40
  Japan 10
  Japan power cord 24
  Japan restriction of hazardous substances 41
  Korea disposal and recycling 29
  laser safety 14, 22
  Macrovision Corporation 17
  Mexico 10
  modem 14
  perchlorate material 31
  power cords 24
  Singapore 12
  South Korea 12
  Taiwan 13
  Thailand wireless notice 13
  travel 26
notices, notebook computers
  Federal Communications Commission 3, 4

P

power cord notice 24

R

radio frequency bands 7
recycling, electronic hardware and battery 28
regulatory submission document, South Korea 12

S

Singapore wireless notice 12
South Korea notice 12
South Korea regulatory submission document 12

T

Taiwan notice 13
TCO Certified Certification 42
TCO Certified Edge Certification 43
Thailand wireless notice 13
travel notice 26
tropical warning notice 27
TV tuner, cable grounding notice 27

U

U.S. modem statement 15

V

voice support 17
volume level notice, headset and earphone 21

W

wireless devices 4
wireless LAN devices 3

Symbols/Numerics

台灣對於危險物質的限制注意事項 38, 39
注意事項
台灣有害物質限制 38, 39