Lenovo ThinkSystem SR650 V3 Server
Product Guide

The Lenovo ThinkSystem SR650 V3 is an ideal 2-socket 2U rack server for small businesses up to large enterprises that need industry-leading reliability, management, and security, as well as maximizing performance and flexibility for future growth. The SR650 V3 is based on the new 4th generation Intel Xeon Scalable processor family (formerly codenamed "Sapphire Rapids").

The SR650 V3 is designed to handle a wide range of workloads, such as databases, virtualization and cloud computing, virtual desktop infrastructure (VDI), infrastructure security, systems management, enterprise applications, collaboration/email, streaming media, web, and HPC.



Figure 1. Lenovo ThinkSystem SR650 V3 with 2.5-inch front drive bays (3.5-inch drive configurations also available)

Did you know?

The SR650 V3 server has been designed to take advantage of the features of the 4th generation Intel Xeon Scalable processors, such as the full performance of 350W 60-core processors, support for 4800 MHz memory and PCIe Gen 5.0 support. The SR650 V3 is a very configuration-rich offering, supporting more than 30 different drive bay configurations in the front, middle and rear of the server and 5 different slot configurations at the rear of the server. This level of flexibility ensures that you can configure the server to meet the needs of your workload.

Key features

Combining performance and flexibility, the SR650 V3 server is a great choice for enterprises of all sizes. The server offers a broad selection of drive and slot configurations and offers numerous high performance features. Outstanding reliability, availability, and serviceability (RAS) and high-efficiency design can improve your business environment and can help save operational costs.

Scalability and performance

The SR650 V3 offers numerous features to boost performance, improve scalability and reduce costs:

- Supports one or two fourth-generation Intel Xeon Processor Scalable processors
  - Up to 60 cores and 120 threads
  - Core speeds of up to 3.7 GHz
  - TDP ratings of up to 350 W
- Support for DDR5 memory DIMMs to maximize the performance of the memory subsystem:
  - Up to 32 DDR5 memory DIMMs, 16 DIMMs per processor
  - 8 memory channels per processor (2 DIMMs per channel)
  - Supports 1 DIMM per channel operating at 4800 MHz
  - Supports 2 DIMMs per channel operating at 4400 MHz
  - Using 256GB 3DS RDIMMs, the server supports up to 8TB of system memory
- Supports up to eight single-width GPUs or three double-wide GPUs, for substantial processing power in a 2U system.
- The server offers up to ten PCIe slots with rear access, plus an internal bay for a cabled RAID adapter or HBA, plus a slot dedicated to the OCP adapter. PCIe slot are either PCIe 5.0 or 4.0 depending on riser selection and rear drive bay selection.
- The server is Compute Express Link (CXL) v1.1 Ready. With CXL 1.1 for next-generation workloads, you can reduce compute latency in the data center and lower TCO. CXL is a protocol that runs across the standard PCIe physical layer and can support both standard PCIe devices as well as CXL devices on the same link.
- Supports up to 40x 2.5-inch hot-swap drive bays, by using combinations of front-accessible (up to 24 bays), mid bays (8 bays) and rear-accessible (8 bays).
- Supports 20x 3.5-inch drive bays for lower-cost high-capacity HDD storage. 2.5-inch and 3.5-inch drive bays can be mixed if desired.
- Supports 20x NVMe drives without oversubscription of PCIe lanes (1:1 connectivity), or up to 32 NVMe drives with a 1:2 oversubscription. The use of NVMe drives maximizes drive I/O performance, in terms of throughput and latency.
- Supports 14x SATA drives using the onboard SATA controller (no additional adapter needed), enabling lower cost, high capacity storage solution for cold or archival storage workloads.
- Supports high-speed RAID controllers from Broadcom providing 12 Gb SAS connectivity to the drive backplanes. A variety of PCIe 3.0 and PCIe 4.0 RAID adapters are available.
- Supports up to two externally accessible 7mm hot-swap drives for operating system boot functions. Optional RAID with the use of Intel VROC.
- Supports M.2 drives for convenient operating system boot functions or data storage. Available M.2 adapters support either one M.2 drive or two M.2 drives. Optional RAID with the use of Intel VROC.
- The server has a dedicated industry-standard OCP 3.0 small form factor (SFF) slot, with a PCIe 5.0 x16 interface, supporting a variety of Ethernet network adapters. A simple-swap mechanism with a thumbscrew and pull-tab enables tool-less installation and removal of the adapter. The adapter supports shared BMC network sideband connectivity to enable out-of-band systems management.

- The server offers PCI Express 5.0 I/O expansion capabilities that doubles the theoretical maximum bandwidth of PCIe 4.0 (32GT/s in each direction for PCIe Gen 5, compared to 16 GT/s with PCIe Gen 4 and 8 GT/s with PCIe Gen 3). A PCIe 5.0 x16 slot provides 128 GB/s bandwidth, enough to support a dual-port 200GbE network connection.

Availability and serviceability

The SR650 V3 provides many features to simplify serviceability and increase system uptime:

- Designed to run 24 hours a day, 7 days a week
- The server offers Single Device Data Correction (SDDC, also known as Chipkill), Adaptive Double-Device Data Correction (ADDDC, also known as Redundant Bit Steering or RBS), and memory mirroring for redundancy in the event of a non-correctable memory failure. Note: ADDDC in not supported with Value RDIMMs.
- The server offers hot-swap drives, supporting RAID redundancy for data protection and greater system uptime.
- Available M.2 adapters support RAID-1 (using Intel VROC) which can enable two SATA or two NVMe M.2 drives to be configured as a redundant pair.
- The server has up to two hot-swap redundant power supplies and up to six hot-swap redundant fans to provide availability for business-critical applications.
- Optional front-accessible slots and drives so that most major components and cables (except power) are located at the front of the server (planned for 2Q/2023)
- The light path diagnostics feature uses LEDs to lead the technician to failed (or failing) components, which simplifies servicing, speeds up problem resolution, and helps improve system availability.
- Solid-state drives (SSDs) offer more reliability and performance than traditional mechanical HDDs for greater uptime.
- Proactive Platform Alerts (including PFA and SMART alerts): Processors, voltage regulators, memory, internal storage (SAS/SATA HDDs and SSDs, NVMe SSDs, M.2 storage, flash storage adapters), fans, power supplies, RAID controllers, server ambient and subcomponent temperatures. Alerts can be surfaced through the XClarity Controller to managers such as Lenovo XClarity Administrator, VMware vCenter, and Microsoft System Center. These proactive alerts let you take appropriate actions in advance of possible failure, thereby increasing server uptime and application availability.
- The built-in XClarity Controller continuously monitors system parameters, triggers alerts, and performs recovery actions in case of failures to minimize downtime.
- Built-in diagnostics in UEFI, using Lenovo XClarity Provisioning Manager, speed up troubleshooting tasks to reduce service time.
- Lenovo XClarity Provisioning Manager supports diagnostics and can save service data to a USB key drive or remote CIFS share folder for troubleshooting and reduce service time.
- Auto restart in the event of a momentary loss of AC power (based on power policy setting in the XClarity Controller service processor)
- Offers a diagnostics port on the front of the server to allow you to attach an external diagnostics handset for enhanced systems management capabilities.
- Support for the XClarity Administrator Mobile app running on a supported smartphone or tablet and connected to the server through the service-enabled USB port, enables additional local systems management functions.
- Three-year or one-year customer-replaceable unit and onsite limited warranty (varies by geography), 9 x 5 next business day. Optional service upgrades are available.

Manageability and security

Systems management features simplify local and remote management of the SR650 V3:

- The server includes XClarity Controller 2 (XCC2) to monitor server availability. Optional upgrade to XCC Platinum to provide remote control (keyboard video mouse) functions, support for the mounting of remote media files (ISO and IMG image files), boot capture, power capping and new XCC2 Platinum features. New XCC2 Platinum features include System Guard, new security modes

including a CNSA-compliant mode, FIPS 140-3 and NIST 800-193 support, and a new Neighbor Group feature.

- Dedicated Ethernet port at the rear of the server for remote management (BMC management).
- Lenovo XClarity Administrator offers comprehensive hardware management tools that help to increase uptime, reduce costs and improve productivity through advanced server management capabilities.
- UEFI-based Lenovo XClarity Provisioning Manager, accessible from F1 during boot, provides system inventory information, graphical UEFI Setup, platform update function, RAID Setup wizard, operating system installation function, and diagnostic functions.
- Support for Lenovo XClarity Energy Manager, which captures real-time power and temperature data from the server and provides automated controls to lower energy costs.
- An integrated industry-standard Unified Extensible Firmware Interface (UEFI) enables improved setup, configuration, and updates, and simplifies error handling.
- Support for industry standard management protocols, IPMI 2.0, SNMP 3.0, Redfish REST API, serial console via IPMI
- An integrated hardware Trusted Platform Module (TPM) supporting TPM 2.0 enables advanced cryptographic functionality, such as digital signatures and remote attestation.
- Administrator and power-on passwords help protect from unauthorized access to the server.
- Supports Secure Boot to ensure only a digitally signed operating system can be used. Supported with HDDs and SSDs, as well as 7mm and M.2 drives.
- Industry-standard Advanced Encryption Standard (AES) NI support for faster, stronger encryption.
- Intel Execute Disable Bit functionality can prevent certain classes of malicious buffer overflow attacks when combined with a supported operating system.
- Intel Trusted Execution Technology provides enhanced security through hardware-based resistance to malicious software attacks, allowing an application to run in its own isolated space, protected from all other software running on a system.
- Additional physical security features are an available chassis intrusion switch and available lockable front bezel.

Energy efficiency

The SR650 V3 offers the following energy-efficiency features to save energy, reduce operational costs, and increase energy availability:

- Energy-efficient system board components help lower operational costs.
- High-efficiency power supplies with 80 PLUS Platinum and Titanium certifications
- Solid-state drives (SSDs) consume as much as 80% less power than traditional spinning 2.5-inch HDDs.
- The server uses hexagonal ventilation holes, which can be grouped more densely than round holes, providing more efficient airflow through the system and thus keeping your system cooler.
- Optional Lenovo XClarity Energy Manager provides advanced data center power notification, analysis, and policy-based management to help achieve lower heat output and reduced cooling needs.

Comparing the SR650 V3 to the SR650 V2

The ThinkSystem SR650 V3 improves on the previous generation SR650 V2, as summarized in the following table.

Table 1. Comparing the ThinkSystem SR650 V3 to the previous generation SR650 V2

Feature	SR650 V2	SR650 V3	Benefits
Processor	• 2x 3rd Gen Intel Xeon Scalable Processors • Up to 40 cores • TDP ratings up to 270W • 64x PCIe 4.0 lanes per processor	• 2x 4th Gen Intel Xeon Scalable Processors • Up to 60 cores • TDP ratings up to 350W • 80x PCIe 5.0 lanes per processor	• Significant increase in cores per processor • Increased performance • Consolidation of more apps on same number of servers, reducing costs • New PCIe 5.0 support means higher performance networking and NVMe storage
Memory	• DDR4 memory operating up to 3200 MHz • 8 channels per CPU • 32 DIMMs (16 per processor), 2 DIMMs per channel • Supports RDIMMs and 3DS RDIMMs • Up to 8TB of system memory • Intel Optane Persistent Memory 200 Series	• DDR5 memory operating up to 4800 MHz • 8 channels per CPU • 32 DIMMs (16 per processor), 2 DIMMs per channel • Supports RDIMMs, 3DS RDIMMs and 9x4 RDIMMs • Up to 8TB of system memory • No support for Intel Optane Persistent Memory	• New DDR5 memory offers significant performance improvements over DDR4 • More memory channels means greater memory bandwidth • Support for lower-cost 9x4 DIMMs
Internal storage	• 20x 3.5” SAS/SATA/NVMe (12 front, 4 mid, 4 rear) • 40x 2.5” SAS/SATA/NVMe (24 front, 8 mid, 8 rear) • Up to 4x 3.5” or 8x 2.5” mid-chassis drive bays • Up to 4x 3.5” or 8x 2.5” rear drive bays • 2x Internal M.2 with optional RAID • 8x Onboard NVMe ports • NVMe Retimer adapters for 16x NVMe • 2x rear 7mm hot swap SAS/SATA/NVMe; optional RAID	• 20x 3.5” SAS/SATA/NVMe (12 front, 4 mid, 4 rear) • 40x 2.5” SAS/SATA/NVMe (24 front, 8 mid, 8 rear) • Up to 4x 3.5” or 8x 2.5” mid-chassis drive bays • Up to 4x 3.5” or 8x 2.5” rear drive bays • 2x Internal M.2 with optional RAID 1 (RAID support via VROC) • 20x Onboard NVMe ports • NVMe Retimer adapters for 16x NVMe • 2x rear 7mm hot swap SAS/SATA/NVMe (RAID support via VROC)	• Flexible storage offerings • Up to 32x NVMe drives for high-performance storage • 7mm hot swap drives as boot drives

Feature	SR650 V2	SR650 V3	Benefits
RAID	• 8-, 16- and 32-port RAID adapters with up to 8GB flash • Support for Lenovo and Broadcom adapters • Support for PCIe or Internal cabled (CFF) form factor adapters • Support for NVMe drives connected to 940 RAID adapters (Tri-Mode) • Storage HBAs available • PCIe 3.0 and PCIe 4.0 adapter choices	• 8-, 16- and 32-port RAID adapters with up to 8GB flash • Support for Lenovo and Broadcom adapters • Support for PCIe or Internal cabled (CFF) form factor adapters • Support for NVMe drives connected to 940 RAID adapters (Tri-Mode) • Storage HBAs available • PCIe 3.0 and PCIe 4.0 adapter choices with support for Gen 5 adapters when available	• Consistent RAID/HBA support • Flexible config solution • PCIe Gen 5 allows for greater storage performance
Networking	• OCP 3.0 slot with PCIe Gen 4 x16 interface (rear of server) • Additional PCIe adapters supported • 1GbE dedicated Management port	• OCP 3.0 slot with PCIe Gen 5 x16 interface (rear or front of server) (front OCP slot support planned for 2Q/2023) • Additional PCIe adapters supported • 1GbE dedicated Management port	• Improved performance with PCIe Gen 5 • Optional front-accessible OCP slot
PCIe	• Supports PCIe 4.0 • Up to 8x PCIe slots (all full-height slots) • Supports a RAID/HBA in CFF form factor (does not occupy a PCIe slot) • Additional OCP 3.0 slot	• Supports PCIe 5.0 • Up to 10x PCIe slots (6x full height, 4x low-profile) or 8x PCIe slots (all full-height slots) • Up to 9x slots can be PCIe 5.0 • Supports a RAID/HBA in CFF form factor (does not occupy a PCIe slot) • Additional OCP 3.0 slot • Support for 3x front-accessible slots (2x FH PCIe + 1x OCP) with 16 drive bays (planned for 2Q/2023)	• PCIe Gen 5 allows for greater I/O performance • Flexible PCIe offerings • Front-accessible slots available • More PCIe connections for greater PCIe/NVMe support
GPU support	• Supports up to 8x single-wide GPUs or up to 3x double-wide GPUs	• Supports up to 8x single-wide GPUs or up to 3x double-wide GPUs	• High performance GPU support

Feature	SR650 V2	SR650 V3	Benefits
Management and security	• XClarity Controller • Support for full XClarity toolset including XClarity Administrator • Platform Firmware Resiliency (PFR) hardware Root of Trust (RoT) • Tamper Switch security solution (intrusion switch)	• Integrated XClarity Controller 2 • Support for full XClarity toolset including XClarity Administrator • Platform Firmware Resiliency (PFR) hardware Root of Trust (RoT) • Tamper Switch security solution (intrusion switch)	• New XCC2 offers improved management capabilities • Same system management tool with previous generation • Silicon-level security solution
Power	• Choice of 500W, 750W, 1100W, 1800W AC Hot Plug PSUs • Available in Titanium and Platinum efficiency levels • 1100W -48VDC Platinum general support • 240V HVDC support for PRC customers • Active-Standby mode	• Choice of 750W, 1100W, 1800W, 2400W, 2600W AC Hot Plug PSUs • Available in Titanium and Platinum efficiency levels • 1100W -48VDC Platinum general support • 240V HVDC support for PRC customers • Active-Standby mode	• Multiple PSU offerings to suit the configuration selected • New ErP Lot 9-compliant offerings • Support for Telco customers with -48V requirements

Components and connectors

The following figure shows the front of the SR650 V3.

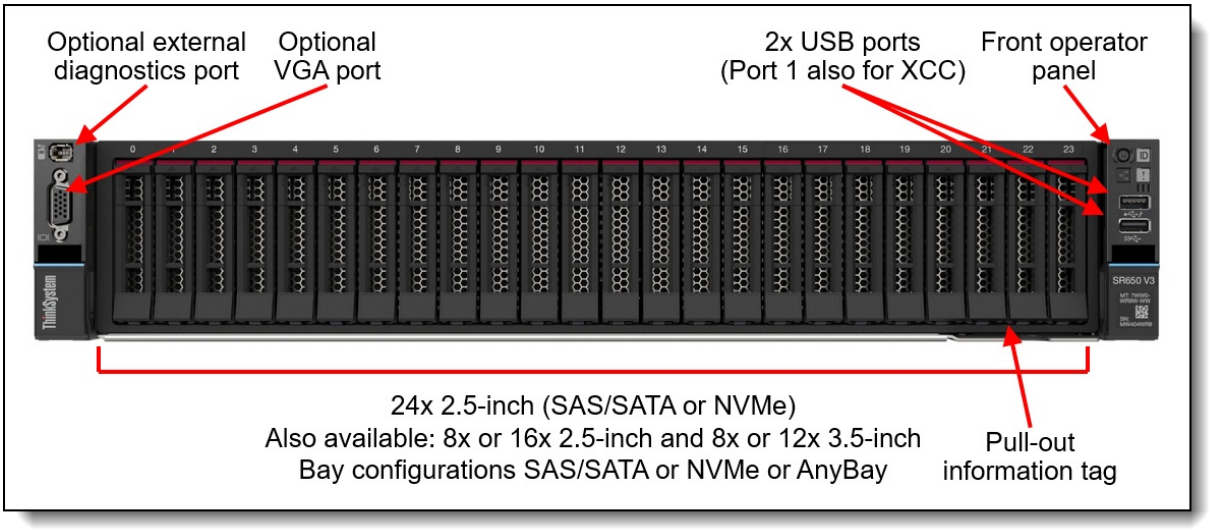

Figure 2. Front view of the ThinkSystem SR650 V3 with 2.5-inch drive bays

For details on the front ports, including the optional front VGA port and optional external diagnostic port, see the Local management section.

The following figure shows the front configurations of the SR650 V3. The server supports either 2.5-inch hot-swap drives (8, 16 or 24 drive bays) or 3.5-inch hot-swap drives (8 or 12 bays) at the front. The server also supports three front PCIe slots (2 full-height, 1 OCP) in addition to 16x 2.5-inch drive bays.

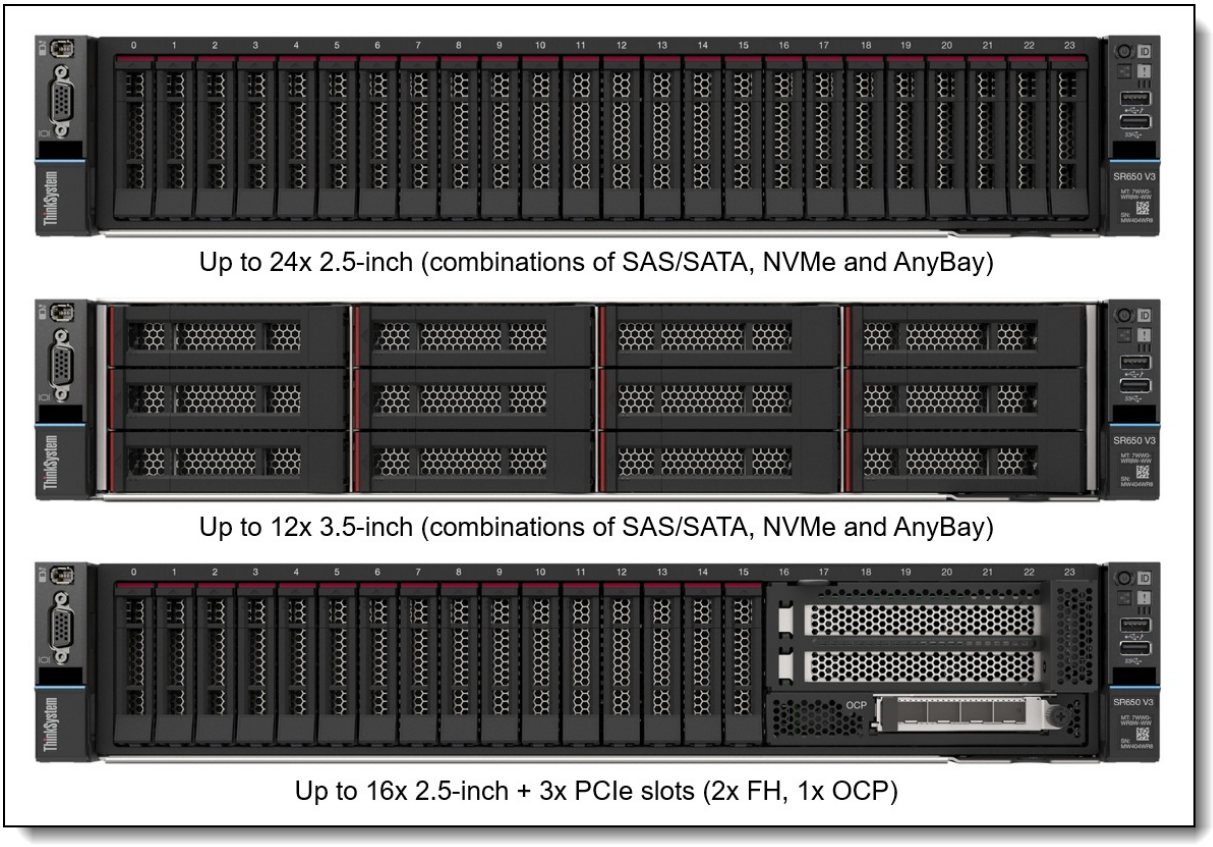

Figure 3. Front view of the ThinkSystem SR650 V3

The following figure shows the components visible from the rear of the server. The figure shows one configuration, with eight PCIe slots, however there are additional rear configurations which include 3.5-inch drive bays, 2.5-inch drive bays, or 7mm drive bays.

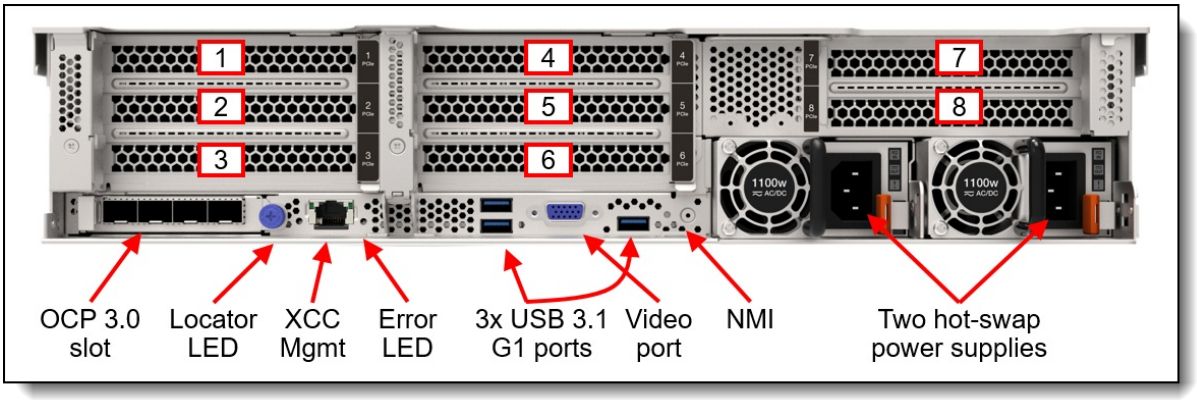

Figure 4. Rear view of the ThinkSystem SR650 V3 (configuration with eight PCIe slots)

The following figure shows the locations of key components inside the server.

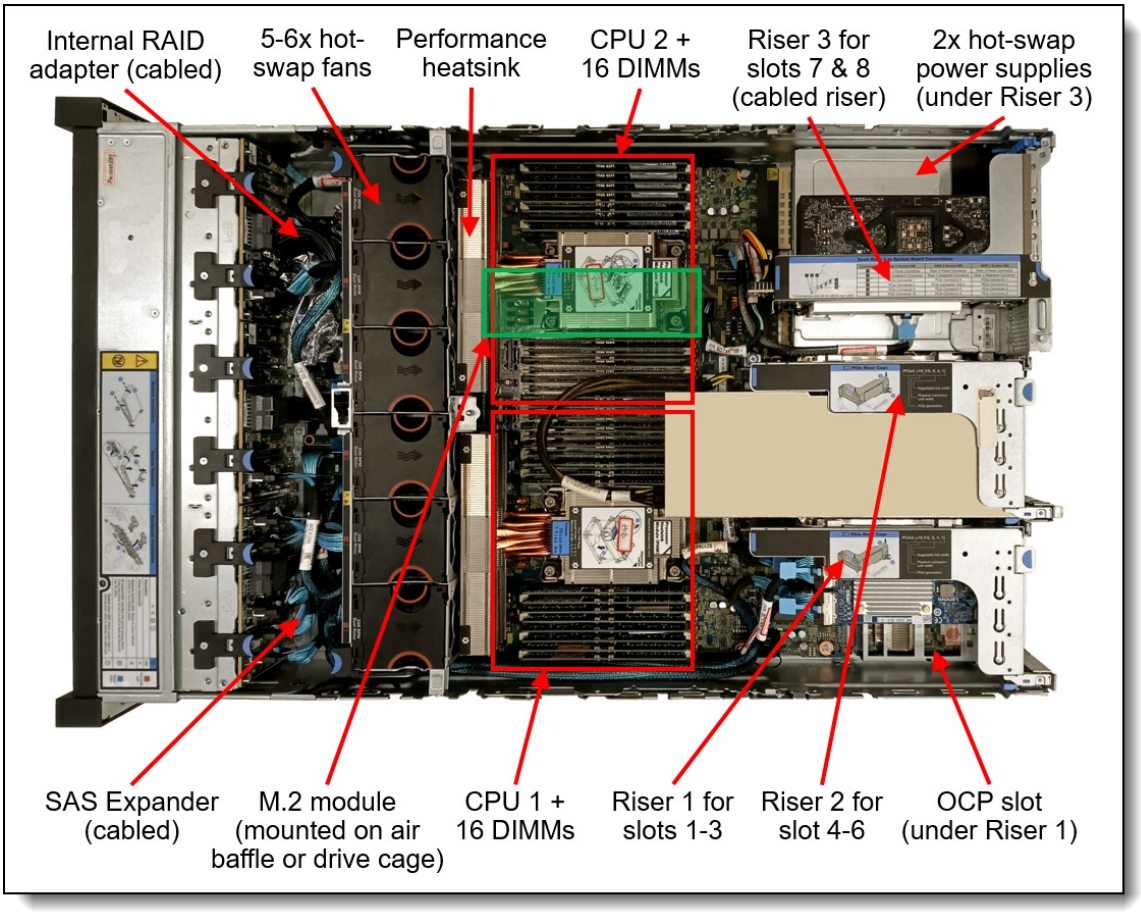

Figure 5. Internal view of the ThinkSystem SR650 V3

System architecture

The following figure shows the architectural block diagram of the SR650 V3, showing the major components and their connections.

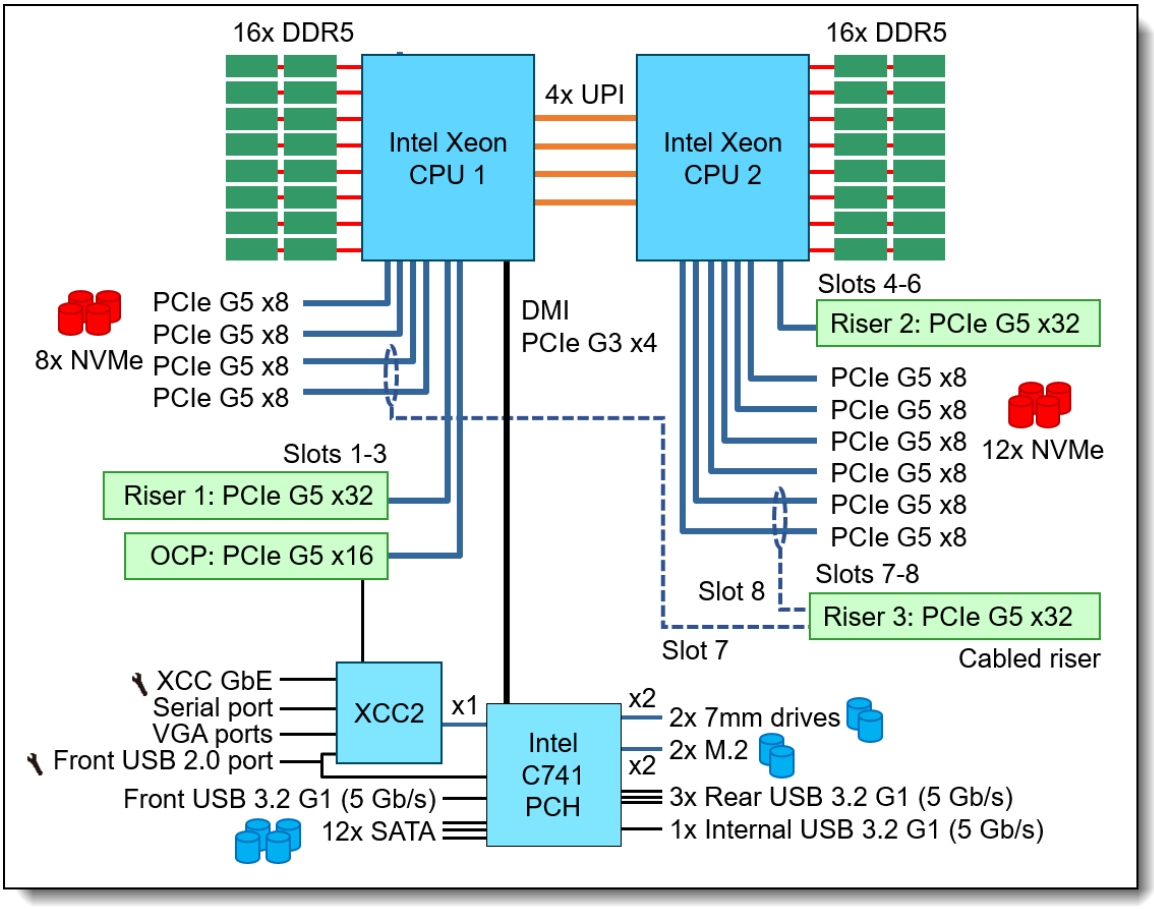

Figure 6. SR650 V3 system architectural block diagram

Standard specifications

The following table lists the standard specifications.

Table 2. Standard specifications

Components	Specification
Machine types	7D75 - 1 year warranty 7D76 - 3 year warranty
Form factor	2U rack
Processor	One or two 4th-generation Intel Xeon Scalable processor (formerly codenamed "Sapphire Rapids"). Supports processors up to 60 cores, core speeds of up to 4.0 GHz, and TDP ratings of up to 350 W.
Chipset	Intel C741 "Emmitsburg" chipset, part of the platform codenamed "Eagle Stream"
Memory	32 DIMM slots with two processors (16 DIMM slots per processor). Each processor has 8 memory channels, with 2 DIMMs per channel (DPC). Lenovo TruDDR5 RDIMMs, Value RDIMMs, and 3DS RDIMMs are supported. DIMMs operate at up to 4800 MHz at 1 DPC and up to 4400 MHz at 2 DPC.

Components	Specification
Persistent memory	No support.
Memory maximum	Up to 8TB by using 32x 256GB 3DS RDIMMs
Memory protection	ECC, SDDC (for x4-based memory DIMMs), ADDDC (for x4-based memory DIMMs excluding Value RDIMMs, requires Platinum or Gold processors), and memory mirroring.
Disk drive bays	Up to 20x 3.5-inch or 40x 2.5-inch hot-swap drive bays: • Front bays can be 3.5-inch (8 or 12 bays) or 2.5-inch (8, 16 or 24 bays) • Middle bays can be 3.5-inch (4 bays) or 2.5-inch (8 bays) • Rear bays can be 3.5-inch (2 or 4 bays) or 2.5-inch (4 or 8 bays) • Combinations of SAS/SATA, NVMe, or AnyBay (supporting SAS, SATA or NVMe) are available The server also supports these drives for OS boot or drive storage: • Two 7mm drives at the rear of the server (in addition to any 2.5-inch or 3.5-inch drive bays) • Internal M.2 module supporting up to two M.2 drives See Supported drive bay combinations for details.
Maximum internal storage	• 2.5-inch drives: ◦ 1228.8TB using 40x 30.72TB 2.5-inch SAS/SATA SSDs ◦ 491.52TB using 32x 15.36TB 2.5-inch NVMe SSDs ◦ 96TB using 40x 2.4TB 2.5-inch HDDs ◦ 15.36TB using 2x 7.68TB 7mm SSDs • 3.5-inch drives: ◦ 400TB using 20x 20TB 3.5-inch HDDs ◦ 307.2TB using 20x 15.36TB 3.5-inch SAS/SATA SSDs ◦ 153.6TB using 12x 12.8TB 3.5-inch NVMe SSDs
Storage controller	• 14x Onboard SATA ports (Intel VROC SATA RAID, formerly known as Intel RSTe RAID) • Up to 20x Onboard NVMe ports (includes Intel VROC NVMe RAID, with optional license for non-Intel NVMe SSDs) • NVMe Retimer Adapter (supports Intel VROC NVMe RAID) • 12 Gb SAS/SATA RAID adapters ◦ 8, 16 or 32 ports ◦ Up to 8GB flash-backed cache ◦ PCIe 4.0 or PCIe 3.0 host interface • 12 Gb SAS/SATA HBA (non-RAID) ◦ 8-port and 16-port ◦ PCIe 4.0 or PCIe 3.0 host interface
Optical drive bays	No internal optical drive
Tape drive bays	No internal backup drive
Network interfaces	Dedicated OCP 3.0 SFF slot with PCIe 5.0 x16 host interface. Supports a variety of 2-port and 4-port adapters with 1, 10, 25 or 100 GbE network connectivity. One port can optionally be shared with the XClarity Controller 2 (XCC2) management processor for Wake-on-LAN and NC-SI support.

Components	Specification
PCIe slots	Up to 10x PCIe slots with rear access, plus a slot dedicated to the OCP adapter. Slot are either PCIe 5.0 or 4.0 depending on riser selection and rear drive bay selection. The use of some slots requires two processors. Slots are configured using three riser cards. Riser 1 (slots 1-3) and Riser 2 (slots 4-6) are installed in slots in the system board, Riser 3 (slots 7-8) and Riser 4 (9-10) are cabled to ports on the system board. A variety of riser cards are available. See theI/O expansion for details. For 2.5-inch front drive configurations, the server supports the installation of a RAID adapter or HBA in a dedicated area that does not consume any of the PCIe slots. The server also supports slots at the front of the server (configurations with up to 16 drive bays) (planned for 2Q/2023): • 1x OCP slot • 2x PCIe x16 full-height half-length slots
GPU support	Supports up to 8x single-wide GPUs or up to 3x double-wide GPUs
Ports	Front: 1x USB 3.2 G1 (5 Gb/s) port, 1x USB 2.0 port (also for XCC local management), External diagnostics port, optional VGA port. Rear: 3x USB 3.2 G1 (5 Gb/s) ports, 1x VGA video port, 1x RJ-45 1GbE systems management port for XCC remote management. Optional DB-9 COM serial port (installs in slot 3). Internal: 1x USB 3.2 G1 (5 Gb/s) connector for operating system or license key purposes
Cooling	6x (with two processors installed) or 5x (with one processor installed) single-rotor or dual-rotor hot swap 60 mm fans, configuration dependent. Fans are N+1 redundant, tolerating a single-rotor failure. One fan integrated in each power supply.
Power supply	Up to two hot-swap redundant AC power supplies, 80 PLUS Platinum or 80 PLUS Titanium certification. 750 W, 1100 W, 1800 W, 2400 W and 2600W AC options, supporting 220 V AC. 750 W and 1100 W options also support 110V input supply. In China only, all power supply options support 240 V DC. Also available is a 1100W power supply with a -48V DC input.
Video	Embedded graphics with 16 MB memory with 2D hardware accelerator, integrated into the XClarity Controller 2 management controller. Maximum resolution is 1920x1200 32bpp at 60Hz.
Hot-swap parts	Drives, power supplies, and fans.
Systems management	Operator panel with status LEDs. Optional External Diagnostics Handset with LCD display. Models with 8x or 16x 2.5-inch front drive bays can optionally support an Integrated Diagnostics Panel. XClarity Controller 2 (XCC2) embedded management controller, XClarity Administrator centralized infrastructure delivery, XClarity Integrator plugins, and XClarity Energy Manager centralized server power management. Optional XClarity Controller Platinum to enable remote control and other functions.
Security features	Chassis intrusion switch, Power-on password, administrator's password, Root of Trust module supporting TPM 2.0 and Platform Firmware Resiliency (PFR). Optional lockable front security bezel.
Operating systems supported	Microsoft Windows Server, Windows 10/11, Red Hat Enterprise Linux, SUSE Linux Enterprise Server, VMware ESXi, Ubuntu Server. See the Operating system support section for specifics.
Limited warranty	Three-year or one-year (model dependent) customer-replaceable unit and onsite limited warranty with 9x5 next business day (NBD).

Components	Specification
Service and support	Optional service upgrades are available through Lenovo Services: 4-hour or 2-hour response time, 6-hour fix time, 1-year or 2-year warranty extension, software support for Lenovo hardware and some third-party applications.
Dimensions	Width: 445 mm (17.5 in.), height: 87 mm (3.4 in.), depth: 766 mm (30.1 in.). See Physical and electrical specifications for details.
Weight	Maximum: 38.8 kg (85.5 lb)

Models

ThinkSystem SR650 V3 models can be configured by using the Lenovo Data Center Solution Configurator (DCSC).

Configure-to-order (CTO) models are used to create models with factory-integrated server customizations. For CTO models, two base CTO models are available for the SR650 V3 as listed in the following table, CTO1WW and CTOLWW:

- The CTO1WW base CTO model is for general business and is selectable by choosing **General Purpose** mode in DCSC.
- The CTOLWW base model is intended for High Performance Computing (HPC) and Artificial Intelligence (AI) configurations and solutions, including configurations for Lenovo Scalable Infrastructure (LeSI), and is enabled using either the **HPC & AI LeSI Solutions** mode or **HPC & AI Hardware** mode in DCSC. CTOLWW configurations can also be built using System x and Cluster Solutions Configurator (x-config).

Preconfigured server models may also be available for the SR650 V3, however these are region-specific; that is, each region may define their own server models, and not all server models are available in every region.

The following table lists the base CTO models of the ThinkSystem SR650 V3 server.

Table 3. Base CTO models

Machine Type/Model General purpose	Machine Type/Model for HPC and AI	Description
7D76CTO1WW	7D76CTOLWW	ThinkSystem SR650 V3 – 3-year Warranty
7D75CTO1WW	7D75CTOLWW	ThinkSystem SR650 V3 – 1-year Warranty
7D77CTO1WW	7D77CTOLWW	ThinkSystem SR650 V3 – SAP HANA configurations with 3-year warranty

Models of the SR650 V3 are defined based on whether the server has 2.5-inch drive bays at the front (called the 2.5-inch chassis) or whether it has 3.5-inch drive bays at the front (called the 3.5-inch chassis). For models, the feature codes for these chassis bases are as listed in the following table.

Table 4. Chassis base feature codes

Feature code	Description
BLKK	ThinkSystem SR650 V3 24x2.5" Chassis
BLKJ	ThinkSystem SR650 V3 12x3.5" Chassis

The following tables list the available models, grouped by region.

- Models for Asia Pacific region
- Models for Australia and New Zealand

- Models for EMEA region

Refer to the Specifications section for information about standard features of the server.

Common to all models:

- Power supplies are Platinum unless otherwise stated
- All models include the External Diagnostics Handset port
- All models include a Toolless Slide Rail Kit

Models for Asia Pacific region

The following table lists the models for the Asia Pacific region: Australia, Bangladesh, Brunei, Hong Kong, India, Japan, Korea, Sri Lanka, Malaysia, New Zealand, Philippines, Singapore, Thailand, Taiwan, Vietnam

Table 5. Models for Asia Pacific markets

Model	Intel Xeon Scalable processor†	Memory	RAID	Drive bays	OCP	Slots	Power supply	Front VGA	XCC	Fans	Intru sw.
Standard models with a 3-year warranty (machine type 7D76)											
7D76A01UAP	1x Silver 4410T 10C 150W 2.7G	1x 16GB	9350-16i	12x 3.5" SAS Open bay	Open	3 (x16, x8, x8) Gen4	1x750W	Yes	Std	5x Std	Opt
7D76A01XAP	1x Silver 4410T 10C 150W 2.7G	1x 16GB	9350-8i	8x 2.5" SAS Open bay	Open	3 (x16, x8, x8) Gen4	1x750W	Yes	Std	5x Std	Opt
7D76A021AP	1x Silver 4410Y 12C 150W 2.0G	1x 16GB	9350-8i	8x 2.5" SAS Open bay	Open	3 (x16, x8, x8) Gen4	1x750W	Yes	Std	5x Std	Opt
7D76A02JAP	1x Silver 4410Y 12C 150W 2.0G	1x 16GB	9350-16i	12x 3.5" SAS Open bay	Open	3 (x16, x8, x8) Gen4	1x750W	Yes	Std	5x Std	Opt
7D76A01TAP	1x Gold 5415+ 8C 150W 2.9G	1x 16GB	9350-16i	12x 3.5" SAS Open bay	Open	3 (x16, x8, x8) Gen4	1x750W	Yes	Std	5x Std	Opt
7D76A01WAP	1x Gold 5415+ 8C 150W 2.9G	1x 16GB	9350-8i	8x 2.5" SAS Open bay	Open	3 (x16, x8, x8) Gen4	1x750W	Yes	Std	5x Std	Opt

† Processor description: Processor model, number of cores, thermal design power (TDP), core frequency

Models for Australia and New Zealand

AP models: Customers in Australia and New Zealand also have access to the Asia Pacific region models.

Common to all Australia and New Zealand models:

- All models include a Toolless Slide Rail Kit and Cable Management Arm

Table 6. Models for Australia and New Zealand

Model	Intel Xeon Scalable processor†	Memory	RAID	Drive bays	OCP	Slots	Power supply	Front VGA	XCC	Fans	Intru sw.
TopSeller models with a 3-year warranty (machine type 7D76)											
7D76A01VAU	1x Silver 4410Y 12C 150W 2.0G	1x 16GB	9350-16i	12x 3.5" SAS Open bay	Open	3 (x16, x8, x8) Gen4	1x750W	Yes	Plat	5x Perf	Opt
7D76A029AU	1x Silver 4410Y 12C 150W 2.0G	1x 16GB	5350-8i	8x 2.5" SAS Open bay	Open	3 (x16, x8, x8) Gen4	1x750W	Yes	Plat	5x Perf	Opt
7D76A02EAU	1x Silver 4410Y 12C 150W 2.0G	1x 32GB 2Rx8	9350-8i	8x 2.5" SAS Open bay	Open	3 (x16, x8, x8) Gen4	1x750W	Yes	Plat	5x Perf	Opt
7D76A02GAU	1x Gold 5416S 16C 150W 2.0G	1x 32GB 2Rx8	9350-8i	8x 2.5" SAS Open bay	Open	3 (x16, x8, x8) Gen4	1x750W	Yes	Plat	5x Perf	Opt
7D76A022AU	1x Gold 5418Y 24C 185W 2.0G	1x 32GB 2Rx8	9350-8i	8x 2.5" SAS Open bay	Open	3 (x16, x8, x8) Gen4	1x750W	Yes	Plat	5x Perf	Opt
7D76A02SAU	1x Gold 5418Y 24C 185W 2.0G	1x 32GB 2Rx8	Option	16x 2.5" Any Open bay	Open	3 (x16, x8, x8) Gen5	1x750W	Yes	Plat	5x Perf	Opt

† Processor description: Processor model, number of cores, thermal design power (TDP), core frequency

Models for EMEA region

Table 7. Models for EMEA region

Model	Intel Xeon Scalable processor†	Memory	RAID	Drive bays	OCP	Slots	Power supply	Front VGA	XCC	Fans	Intru sw.
Standard models with a 3-year warranty (machine type 7D76)											
7D76A01YEA	1x Silver 4410Y 12C 150W 2.0G	1x 64GB	SATA	12x 3.5" SAS Open bay	Open	Open	1x1100W Titanium	Opt	Plat	5x Std	Yes
7D76A023EA	1x Silver 4410Y 12C 150W 2.0G	1x 64GB	9350-8i 2GB Int	8x 2.5" SAS Open bay	Open	Open	1x1100W Titanium	Opt	Plat	5x Std	Yes
7D76A02KEA	1x Silver 4410Y 12C 150W 2.0G	1x 64GB	SATA	8x 3.5" SAS Open bay	Open	Open	1x1100W Titanium	Opt	Plat	5x Std	Yes
7D76A02QEA	1x Silver 4410Y 12C 150W 2.0G	1x 64GB	940-8i 4GB	8x 2.5" SAS Open bay	Open	3 (x16, x8, x8) Gen4	1x1100W Titanium	Opt	Plat	5x Std	Yes
7D76A034EA	1x Silver 4410Y 12C 150W 2.0G	1x 64GB	Option	Option 2.5" Open bay	Open	Open	1x1100W Titanium	Opt	Plat	5x Std	Yes
7D76A01SEA	1x Gold 5415+ 8C 150W 2.9G	1x 64GB	9350-8i 2GB Int	8x 2.5" SAS Open bay	Open	Open	1x1100W Titanium	Opt	Plat	5x Std	Yes
7D76A035EA	1x Gold 5415+ 8C 150W 2.9G	1x 64GB	Option	Option 2.5" Open bay	Open	Open	1x1100W Titanium	Opt	Plat	5x Std	Yes
7D76A020EA	1x Gold 5416S 16C 150W 2.0G	1x 64GB	9350-8i 2GB Int	8x 2.5" SAS Open bay	Open	Open	1x1100W Titanium	Opt	Plat	5x Std	Yes
7D76A02BEA	1x Gold 5416S 16C 150W 2.0G	1x 64GB	SATA	12x 3.5" SAS Open bay	Open	Open	1x1100W Titanium	Opt	Plat	5x Std	Yes

Model	Intel Xeon Scalable processor†	Memory	RAID	Drive bays	OCP	Slots	Power supply	Front VGA	XCC	Fans	Intru sw.
7D76A02NEA	1x Gold 5416S 16C 150W 2.0G	1x 64GB	940-8i 4GB	8x 2.5" SAS Open bay	Open	3 (x16, x8, x8) Gen4	1x1100W Titanium	Opt	Plat	5x Std	Yes
7D76A02VEA	1x Gold 5416S 16C 150W 2.0G	1x 64GB	SATA	8x 3.5" SAS Open bay	Open	Open	1x1100W Titanium	Opt	Plat	5x Std	Yes
7D76A024EA	1x Gold 5418Y 24C 185W 2.0G	1x 64GB	9350-8i 2GB Int	8x 2.5" SAS Open bay	Open	Open	1x1100W Titanium	Opt	Plat	5x Std	Yes
7D76A02MEA	1x Gold 5418Y 24C 185W 2.0G	1x 64GB	940-8i 4GB	8x 2.5" SAS Open bay	Open	3 (x16, x8, x8) Gen4	1x1100W Titanium	Opt	Plat	5x Std	Yes
7D76A036EA	1x Gold 5418Y 24C 185W 2.0G	1x 64GB	Option	Option 2.5" Open bay	Open	Open	1x1100W Titanium	Opt	Plat	5x Std	Yes
7D76A028EA	1x Gold 6426Y 16C 185W 2.5G	1x 64GB	9350-8i 2GB Int	8x 2.5" SAS Open bay	Open	Open	1x1100W Titanium	Opt	Plat	5x Std	Yes
7D76A02CEA	1x Gold 6426Y 16C 185W 2.5G	1x 64GB	SATA	12x 3.5" SAS Open bay	Open	Open	1x1100W Titanium	Opt	Plat	5x Std	Yes
7D76A038EA	1x Gold 6426Y 16C 185W 2.5G	1x 64GB	Option	Option 2.5" Open bay	Open	Open	1x1100W Titanium	Opt	Plat	5x Std	Yes
7D76A02FEA	1x Gold 6430 32C 270W 2.1G	1x 64GB	940-8i 4GB	8x 2.5" SAS Open bay	Open	3 (x16, x8, x8) Gen4	1x1100W Titanium	Opt	Plat	5x Perf	Yes
7D76A02LEA	1x Gold 6430 32C 270W 2.1G	1x 64GB	SATA	12x 3.5" SAS Open bay	Open	Open	1x1100W Titanium	Opt	Plat	5x Perf	Yes
7D76A02TEA	1x Gold 6430 32C 270W 2.1G	1x 64GB	9350-8i 2GB Int	8x 2.5" SAS Open bay	Open	Open	1x1100W Titanium	Opt	Plat	5x Perf	Yes
7D76A033EA	1x Gold 6430 32C 270W 2.1G	1x 64GB	Option	Option 2.5" Open bay	Open	Open	1x1800W Titanium	Opt	Plat	5x Perf	Yes
7D76A039EA	1x Gold 6434 8C 195W 3.7G	1x 64GB	Option	Option 2.5" Open bay	Open	Open	1x1100W Titanium	Opt	Plat	5x Perf	Yes
7D76A02AEA	1x Gold 6438Y+ 32C 205W 2.0G	1x 64GB	9350-8i 2GB Int	8x 2.5" SAS Open bay	Open	Open	1x1100W Titanium	Opt	Plat	5x Std	Yes
7D76A037EA	1x Gold 6438Y+ 32C 205W 2.0G	1x 64GB	Option	Option 2.5" Open bay	Open	Open	1x1100W Titanium	Opt	Plat	5x Std	Yes
7D76A02UEA	1x Gold 6444Y 16C 270W 3.6G	1x 64GB	9350-8i 2GB Int	8x 2.5" SAS Open bay	Open	Open	1x1100W Titanium	Opt	Plat	5x Perf	Yes
7D76A031EA	1x Gold 6444Y 16C 270W 3.6G	1x 64GB	Option	Option 2.5" Open bay	Open	Open	1x1800W Titanium	Opt	Plat	5x Perf	Yes
7D76A032EA	1x Gold 6448Y 32C 225W 2.1G	1x 64GB	Option	Option 2.5" Open bay	Open	Open	1x1800W Titanium	Opt	Plat	5x Perf	Yes
7D76A030EA	1x Platinum 8452Y 36C 300W 2.0G	1x 64GB	Option	Option 2.5" Open bay	Open	Open	1x1800W Titanium	Opt	Plat	5x Perf	Yes

† Processor description: Processor model, number of cores, thermal design power (TDP), core frequency

Processor options

The SR650 V3 supports processors in the 4th Gen Intel Xeon Scalable Processor family. The server supports one or two processors.

Topics in this section:

- Processor options
- Processor features
- One-processor configurations
- Thermal requirements for processors
- UEFI operating modes

Processor options

All supported processors have the following characteristics:

- 8 DDR5 memory channels at 2 DIMMs per channel
- Up to 4 UPI links between processors at 16 GT/s
- 80 PCIe 5.0 I/O lanes

The following table lists the processors that are currently supported by the SR650 V3.

Table 8. SR650 V3 processor support

Part number	Feature code	SKU	Description	Quantity supported
CTO only	BQ68	3408U	Intel Xeon Bronze 3408U 8C 125W 1.8GHz Processor	1*
4XG7A84164	BQ64	4410T	ThinkSystem SR650 V3 Intel Xeon Silver 4410T 10C 150W 2.7GHz Processor Option Kit w/o Fan	2
4XG7A84167	BQ67	4410Y	ThinkSystem SR650 V3 Intel Xeon Silver 4410Y 12C 150W 2.0GHz Processor Option Kit w/o Fan	2
4XG7A84169	BQ69	4416+	ThinkSystem SR650 V3 Intel Xeon Silver 4416+ 20C 165W 2.0GHz Processor Option Kit w/o Fan	2
CTO only	BQ6J	5411N	Intel Xeon Gold 5411N 24C 165W 1.9GHz Processor	1*
CTO only	BU1V	5412U	Intel Xeon Gold 5412U 24C 185W 2.1GHz Processor	1*
4XG7A84163	BQ63	5415+	ThinkSystem SR650 V3 Intel Xeon Gold 5415+ 8C 150W 2.9GHz Processor Option Kit w/o Fan	2
4XG7A84178	BQ6L	5416S	ThinkSystem SR650 V3 Intel Xeon Gold 5416S 16C 150W 2.0GHz Processor Option Kit w/o Fan	2
4XG7A84176	BQ6H	5418N	ThinkSystem SR650 V3 Intel Xeon Gold 5418N 24C 165W 1.8GHz Processor Option Kit w/o Fan	2
4XG7A84166	BQ66	5418Y	ThinkSystem SR650 V3 Intel Xeon Gold 5418Y 24C 185W 2.0GHz Processor Option Kit w/o Fan	2
4XG7A84165	BQ65	5420+	ThinkSystem SR650 V3 Intel Xeon Gold 5420+ 28C 205W 2.0GHz Processor Option Kit w/o Fan	2
CTO only	BPPD	6414U	Intel Xeon Gold 6414U 32C 250W 2.0GHz Processor	1*
4XG7A84172	BQ6C	6416H	ThinkSystem SR650 V3 Intel Xeon Gold 6416H 18C 165W 2.2GHz Processor Option Kit w/o Fan	2
4XG7A84171	BQ6B	6418H	ThinkSystem SR650 V3 Intel Xeon Gold 6418H 24C 185W 2.1GHz Processor Option Kit w/o Fan	2
CTO only	BQ6G	6421N	Intel Xeon Gold 6421N 32C 185W 1.8GHz Processor	1*

Part number	Feature code	SKU	Description	Quantity supported
4XG7A84160	BPQF	6426Y	ThinkSystem SR650 V3 Intel Xeon Gold 6426Y 16C 185W 2.5GHz Processor Option Kit w/o Fan	2
4XG7A84175	BQ6F	6428N	ThinkSystem SR650 V3 Intel Xeon Gold 6428N 32C 185W 1.8GHz Processor Option Kit w/o Fan	2
4XG7A82861	BPPC	6430	ThinkSystem SR650 V3 Intel Xeon Gold 6430 32C 270W 2.1GHz Processor Option Kit w/o Fan	2
4XG7A84158	BPQC	6434	ThinkSystem SR650 V3 Intel Xeon Gold 6434 8C 195W 3.7GHz Processor Option Kit w/o Fan	2
4XG7A84174	BQ6E	6434H	ThinkSystem SR650 V3 Intel Xeon Gold 6434H 8C 195W 3.7GHz Processor Option Kit w/o Fan	2
4XG7A84177	BQ6K	6438M	ThinkSystem SR650 V3 Intel Xeon Gold 6438M 32C 205W 2.2GHz Processor Option Kit w/o Fan	2
4XG7A84173	BQ6D	6438N	ThinkSystem SR650 V3 Intel Xeon Gold 6438N 32C 205W 2.0GHz Processor Option Kit w/o Fan	2
4XG7A84161	BQ62	6438Y+	ThinkSystem SR650 V3 Intel Xeon Gold 6438Y+ 32C 205W 2.0GHz Processor Option Kit w/o Fan	2
4XG7A84159	BPQE	6442Y	ThinkSystem SR650 V3 Intel Xeon Gold 6442Y 24C 225W 2.6GHz Processor Option Kit w/o Fan	2
4XG7A84157	BPQB	6444Y	ThinkSystem SR650 V3 Intel Xeon Gold 6444Y 16C 270W 3.6GHz Processor Option Kit w/o Fan	2
4XG7A84170	BQ6A	6448H	ThinkSystem SR650 V3 Intel Xeon Gold 6448H 32C 250W 2.4GHz Processor Option Kit w/o Fan	2
4XG7A84162	BPQD	6448Y	ThinkSystem SR650 V3 Intel Xeon Gold 6448Y 32C 225W 2.1GHz Processor Option Kit w/o Fan	2
4XG7A82872	BPPM	6454S	ThinkSystem SR650 V3 Intel Xeon Gold 6454S 32C 270W 2.2GHz Processor Option Kit w/o Fan	2
4XG7A82869	BPPH	8444H	ThinkSystem SR650 V3 Intel Xeon Platinum 8444H 16C 270W 2.9GHz Processor Option Kit w/o Fan	2
4XG7A82867	BPPG	8450H	ThinkSystem SR650 V3 Intel Xeon Platinum 8450H 28C 250W 2.0GHz Processor Option Kit w/o Fan	2
4XG7A82862	BPPB	8452Y	ThinkSystem SR650 V3 Intel Xeon Platinum 8452Y 36C 300W 2.0GHz Processor Option Kit w/o Fan	2
4XG7A82866	BPPF	8454H	ThinkSystem SR650 V3 Intel Xeon Platinum 8454H 32C 270W 2.1GHz Processor Option Kit w/o Fan	2
4XG7A82879	BPPT	8458P	ThinkSystem SR650 V3 Intel Xeon Platinum 8458P 44C 350W 2.7GHz Processor Option Kit w/o Fan	2
4XG7A82865	BPPN	8460H	ThinkSystem SR650 V3 Intel Xeon Platinum 8460H 40C 330W 2.2GHz Processor Option Kit w/o Fan	2
4XG7A82873	BPPQ	8460Y+	ThinkSystem SR650 V3 Intel Xeon Platinum 8460Y+ 40C 300W 2.0GHz Processor Option Kit w/o Fan	2
CTO only	BPPK	8461V	Intel Xeon Platinum 8461V 48C 300W 2.2GHz Processor	1*
4XG7A86665	BPQA	8462Y+	ThinkSystem SR650 V3 Intel Xeon Platinum 8462Y+ 32C 300W 2.8GHz Processor Option Kit w/o Fan	2
4XG7A82880	BPPU	8468	ThinkSystem SR650 V3 Intel Xeon Platinum 8468 48C 350W 2.1GHz Processor Option Kit w/o Fan	2

Part number	Feature code	SKU	Description	Quantity supported
4XG7A82864	BPPE	8468H	ThinkSystem SR650 V3 Intel Xeon Platinum 8468H 48C 330W 2.1GHz Processor Option Kit w/o Fan	2
4XG7A82875	BPPP	8468V	ThinkSystem SR650 V3 Intel Xeon Platinum 8468V 48C 330W 2.4GHz Processor Option Kit w/o Fan	2
4XG7A82881	BN0N	8470	ThinkSystem SR650 V3 Intel Xeon Platinum 8470 52C 350W 2.0GHz Processor Option Kit w/o Fan	2
4XG7A82870	BPPJ	8470N	ThinkSystem SR650 V3 Intel Xeon Platinum 8470N 52C 300W 1.7GHz Processor Option Kit w/o Fan	2
CTO only	BPPR	8471N	Intel Xeon Platinum 8471N 52C 300W 1.8GHz Processor	1*
4XG7A82882	BN0M	8480+	ThinkSystem SR650 V3 Intel Xeon Platinum 8480+ 56C 350W 2.0GHz Processor Option Kit w/o Fan	2
4XG7A82878	BPPS	8490H	ThinkSystem SR650 V3 Intel Xeon Platinum 8490H 60C 350W 1.9GHz Processor Option Kit w/o Fan	2

* These processors are single-socket capable processors and are only available in configure-to-order builds or in preconfigured models. Not available as option part numbers.

Configuration notes:

- Processor options include a heatsink but do not include a system fan

Processor features

The 4th Gen Intel Xeon Scalable processors introduce new embedded accelerators to add even more processing capability:

- Intel Data Streaming Accelerator (Intel DSA)
  Drive high performance for storage, networking, and data-intensive workloads by improving streaming data movement and transformation operations. Intel Data Streaming Accelerator (Intel DSA) is designed to offload the most common data movement tasks that cause overhead in data center-scale deployments. Intel DSA helps speed up data movement across the CPU, memory, and caches, as well as all attached memory, storage, and network devices.
- QuickAssist Technology (Intel QAT)
  Help reduce system resource consumption by providing accelerated cryptography, key protection, and data compression with Intel QuickAssist Technology (Intel QAT). By offloading encryption and decryption, this built-in accelerator helps free up processor cores and helps systems serve a larger number of clients.
- Intel Dynamic Load Balancer (Intel DLB)
  Improve the system performance related to handling network data on multi-core Intel Xeon Scalable processors. Intel Dynamic Load Balancer (Intel DLB) enables the efficient distribution of network processing across multiple CPU cores/threads and dynamically distributes network data across multiple CPU cores for processing as the system load varies. Intel DLB also restores the order of networking data packets processed simultaneously on CPU cores.
- Intel In-Memory Analytics Accelerator (Intel IAA)
  Run database and analytics workloads faster, with potentially greater power efficiency. Intel In-Memory Analytics Accelerator (Intel IAA) increases query throughput and decreases the memory footprint for in-memory database and big data analytics workloads. Intel IAA is ideal for in-memory databases, open source databases and data stores like RocksDB, Redis, Cassandra, and MySQL.

The following table summarizes the key features of all supported processors in the SR650 V3.

Table 9. Processor features

CPU model	Cores/ threads	Core speed (Base / TB max†)	L3 cache*	Max memory speed	UPI 2.0 links & speed	TDP	Accelerators				SGX Enclave Size
							DSA	QAT	DLB	IAA	
3408U	8 / 8**	1.8 / 1.9 GHz	22.5 MB*	4000 MHz	None‡	125W	1	0	0	0	64 GB
4410T	10 / 20	2.7 / 4.0 GHz	26.25 MB*	4000 MHz	2 / 16 GT/s	150W	1	0	0	0	64 GB
4410Y	12 / 24	2.0 / 3.9 GHz	30 MB*	4000 MHz	2 / 16 GT/s	150W	1	0	0	0	64 GB
4416+	20 / 40	2.0 / 3.9 GHz	37.5 MB	4000 MHz	2 / 16 GT/s	165W	1	1	1	1	64 GB
5411N	24 / 48	1.9 / 3.9 GHz	45 MB	4400 MHz	None‡	165W	1	2	2	0	128 GB
5412U	24 / 48	2.1 / 3.9 GHz	45 MB	4400 MHz	None‡	185W	1	0	0	0	128 GB
5415+	8 / 16	2.9 / 4.1 GHz	22.5 MB*	4400 MHz	3 / 16 GT/s	150W	1	1	1	1	128 GB
5416S	16 / 32	2.0 / 4.0 GHz	30 MB	4400 MHz	3 / 16 GT/s	150W	1	2	2	0	128 GB
5418N	24 / 48	1.8 / 3.8 GHz	45 MB	4000 MHz	3 / 16 GT/s	165W	1	2	2	0	128 GB
5418Y	24 / 48	2.0 / 3.8 GHz	45 MB	4400 MHz	3 / 16 GT/s	185W	1	0	0	0	128 GB
5420+	28 / 56	2.0 / 4.1 GHz	52.5 MB	4400 MHz	3 / 16 GT/s	205W	1	1	1	1	128 GB
6414U	32 / 64	2.0 / 3.4 GHz	60 MB	4800 MHz	None‡	250W	1	0	0	0	128 GB
6416H	18 / 36	2.2 / 4.2 GHz	45 MB*	4800 MHz	3 / 16 GT/s	165W	1	0	0	1	512 GB
6418H	24 / 48	2.1 / 4.0 GHz	60 MB*	4800 MHz	3 / 16 GT/s	185W	1	0	0	1	512 GB
6421N	32 / 64	1.8 / 3.6 GHz	60 MB	4400 MHz	None‡	185W	1	0	0	0	128 GB
6426Y	16 / 32	2.5 / 4.1 GHz	37.5 MB*	4800 MHz	3 / 16 GT/s	185W	1	0	0	0	128 GB
6428N	32 / 64	1.8 / 3.8 GHz	60 MB	4000 MHz	3 / 16 GT/s	185W	1	2	2	0	128 GB
6430	32 / 64	2.1 / 3.4 GHz	60 MB	4400 MHz	3 / 16 GT/s	270W	1	0	0	0	128 GB
6434	8 / 16	3.7 / 4.1 GHz	22.5 MB*	4800 MHz	3 / 16 GT/s	195W	1	0	0	0	128 GB
6434H	8 / 16	3.7 / 4.1 GHz	22.5 MB*	4800 MHz	3 / 16 GT/s	195W	1	0	0	1	512 GB
6438M	32 / 64	2.2 / 3.9 GHz	60 MB	4800 MHz	3 / 16 GT/s	205W	1	0	0	1	128 GB
6438N	32 / 64	2.0 / 3.6 GHz	60 MB	4800 MHz	3 / 16 GT/s	205W	1	2	2	0	128 GB
6438Y+	32 / 64	2.0 / 4.0 GHz	60 MB	4800 MHz	3 / 16 GT/s	205W	1	1	1	1	128 GB
6442Y	24 / 48	2.6 / 4.0 GHz	60 MB*	4800 MHz	3 / 16 GT/s	225W	1	0	0	0	128 GB
6444Y	16 / 32	3.6 / 4.1 GHz	45 MB*	4800 MHz	3 / 16 GT/s	270W	1	0	0	0	128 GB
6448H	32 / 64	2.4 / 4.1 GHz	60 MB	4800 MHz	3 / 16 GT/s	250W	1	2	2	1	512 GB
6448Y	32 / 64	2.1 / 4.1 GHz	60 MB	4800 MHz	3 / 16 GT/s	225W	1	0	0	0	128 GB
6454S	32 / 64	2.2 / 3.4 GHz	60 MB	4800 MHz	4 / 16 GT/s	270W	4	4	4	0	128 GB
8444H	16 / 32	2.9 / 4.0 GHz	45 MB*	4800 MHz	4 / 16 GT/s	270W	4	0	0	4	512 GB
8450H	28 / 56	2.0 / 3.5 GHz	75 MB*	4800 MHz	4 / 16 GT/s	250W	4	0	0	4	512 GB
8452Y	36 / 72	2.0 / 3.2 GHz	67.5 MB	4800 MHz	4 / 16 GT/s	300W	1	0	0	0	128 GB
8454H	32 / 64	2.1 / 3.4 GHz	82.5 MB*	4800 MHz	4 / 16 GT/s	270W	4	4	4	4	512 GB
8458P	44 / 88	2.7 / 3.8 GHz	82.5 MB	4800 MHz	3 / 16 GT/s	350W	1	1	1	1	512 GB
8460H	40 / 80	2.2 / 3.8 GHz	105 MB*	4800 MHz	4 / 16 GT/s	330W	4	0	0	4	512 GB
8460Y+	40 / 80	2.0 / 3.7 GHz	105 MB*	4800 MHz	4 / 16 GT/s	300W	1	1	1	1	128 GB
8461V	48 / 96	2.2 / 3.7 GHz	97.5 MB*	4800 MHz	None‡	300W	1	1	1	1	128 GB
8462Y+	32 / 64	2.8 / 4.1 GHz	60 MB	4800 MHz	3 / 16 GT/s	300W	1	1	1	1	128 GB
8468	48 / 96	2.1 / 3.8 GHz	105 MB*	4800 MHz	4 / 16 GT/s	350W	1	0	0	0	512 GB
8468H	48 / 96	2.1 / 3.8 GHz	105 MB*	4800 MHz	4 / 16 GT/s	330W	4	4	4	4	512 GB
8468V	48 / 96	2.4 / 3.8 GHz	97.5 MB*	4800 MHz	3 / 16 GT/s	330W	1	1	1	1	128 GB
8470	52 / 104	2.0 / 3.8 GHz	105 MB*	4800 MHz	4 / 16 GT/s	350W	1	0	0	0	512 GB
8470N	52 / 104	1.7 / 3.6 GHz	97.5 MB	4800 MHz	4 / 16 GT/s	300W	4	4	4	0	128 GB
8471N	52 / 104	1.8 / 3.6 GHz	97.5 MB	4800 MHz	None‡	300W	4	4	4	0	128 GB

CPU model	Cores/ threads	Core speed (Base / TB max†)	L3 cache*	Max memory speed	UPI 2.0 links & speed	TDP	Accelerators				SGX Enclave Size
							DSA	QAT	DLB	IAA	
8480+	56 / 112	2.0 / 3.8 GHz	105 MB	4800 MHz	4 / 16 GT/s	350W	1	1	1	1	512 GB
8490H	60 / 120	1.9 / 3.5 GHz	112.5 MB	4800 MHz	4 / 16 GT/s	350W	4	4	4	4	512 GB

† The maximum single-core frequency at with the processor is capable of operating
* L3 cache is 1.875 MB per core or larger. Processors with a larger L3 cache per core are marked with an *
** Bronze 3408U processor does not support Hyper-Threading Technology
‡ SKUs with a U suffix as well as some other SKUs have no UPI links and are are single-socket only

One-processor configurations

The SR650 V3 can be used with only one processor installed. Most core functions of the server (including the XClarity Controller) are connected to processor 1 as shown in the System architecture section.

With only one processor, the server has the following capabilities:

- 16 memory DIMMs for a 4TB maximum
- Slot 1-3 (riser 1) and slots 7-8 (riser 3) are available; Slot 4-6 (riser 2) are not available

Drive support is as follows:

- Front SAS/SATA drives are supported - 8, 16, 24 drives (2.5-inch) or 8, 12 drives (3.5-inch)
- Front NVMe drives are supported - up to 8 drives (2.5-inch) or 4 drives (3.5-inch)
- Rear SAS/SATA drives are supported - 4x 3.5-inch drives or up to 4x 2.5-inch drives
- M.2 drives are supported
- 7mm rear drives are supported

Controller support is as follows:

- 12x onboard SATA
- 12x NVMe (8x onboard + 1x 4-port retimer adapter)
- RAID adapters/HBAs installed in slots 1-3
- Internal RAID/HBA controller (CFF form factor) with SAS/SATA-only configurations

Riser 3 is supported under the following conditions:

- No onboard NVMe connections are available
- With the x8/x8 PCIe G4 Riser3 (BHZX) selected, Slots 7 and 8 are both connected each with x8 lanes
- With the x16/x16 PCIe G4 Riser3 (BHZY) selected, Slot 7 is connected with x16 lanes; Slot 8 is not connected

The following components are not supported:

- Front AnyBay drives are not supported (except 8x SAS/SATA + 4x AnyBay 3.5-inch which is supported)
- Middle NVMe drive bays are not supported (SAS/SATA is supported)
- Rear 4x 3.5-inch drive bay backplane (this backplane gets power from Riser 2 which requires CPU 2)

Thermal requirements for processors

For thermal requirements for processors, see the Thermal Rules section in the Information Center for the SR650 V3:
https://pubs.lenovo.com/sr650-v3/thermal_rules

UEFI operating modes

The SR650 V3 offers preset operating modes that affect energy consumption and performance. These modes are a collection of predefined low-level UEFI settings that simplify the task of tuning the server to suit your business and workload requirements.

The following table lists the feature codes that allow you to specify the mode you wish to preset in the factory for CTO orders.

Table 10. UEFI operating mode presets in DCSC

Feature code	Description
BFYB	Operating mode selection for: "Maximum Performance Mode"
BFYC	Operating mode selection for: "Minimal Power Mode"
BFYD	Operating mode selection for: "Efficiency Favoring Power Savings Mode"
BFYE	Operating mode selection for: "Efficiency - Favoring Performance Mode"

The preset modes for the SR650 V3 are as follows:

- **Maximum Performance Mode** (feature BFYB): Achieves maximum performance but with higher power consumption and lower energy efficiency.
- **Minimal Power Mode** (feature BFYC): Minimize the absolute power consumption of the system.
- **Efficiency Favoring Power Savings Mode** (feature BFYD): Maximize the performance/watt efficiency with a bias towards power savings. It is expected that will be the favored mode for SPECpower benchmark testing for example.
- **Efficiency Favoring Performance Mode** (feature BFYE): Maximize the performance/watt efficiency with a bias towards performance. It is the favored mode for Energy Star certification for example.

For details about these preset modes, and all other performance and power efficiency UEFI settings offered in the SR650 V3, see the paper "Tuning UEFI Settings for Performance and Energy Efficiency on Intel Xeon Scalable Processor-Based ThinkSystem Servers", available from https://lenovopress.lenovo.com/lp1477.

Memory options

The SR650 V3 uses Lenovo TruDDR5 memory operating at up to 4800 MHz. The server supports up to 32 DIMMs with 2 processors. The processors have 8 memory channels and support 2 DIMMs per channel. The server supports up to 8TB of memory using 32x 256GB 3DS RDIMMs and two processors.

The following table lists the memory options that are available for the server.

Lenovo TruDDR5 memory uses the highest quality components that are sourced from Tier 1 DRAM suppliers and only memory that meets the strict requirements of Lenovo is selected. It is compatibility tested and tuned to maximize performance and reliability. From a service and support standpoint, Lenovo TruDDR5 memory automatically assumes the system warranty, and Lenovo provides service and support worldwide.

Table 11. Memory options

Part number	Feature code	Description
DDR5 9x4 RDIMMs - 4800 MHz		
4X77A77483	BNW5	ThinkSystem 32GB TruDDR5 4800MHz (1Rx4) 9x4 RDIMM
4X77A77033	BKTN	ThinkSystem 64GB TruDDR5 4800MHz (2Rx4) 9x4 RDIMM
DDR5 10x4 RDIMMs - 4800 MHz		
4X77A77029	BKTL	ThinkSystem 16GB TruDDR5 4800MHz (1Rx8) RDIMM
4X77A77030	BNF6	ThinkSystem 32GB TruDDR5 4800MHz (1Rx4) 10x4 RDIMM
4X77A77031	BKTM	ThinkSystem 32GB TruDDR5 4800MHz (2Rx8) RDIMM
4X77A77032	BNF9	ThinkSystem 64GB TruDDR5 4800MHz (2Rx4) 10x4 RDIMM
DDR5 10x4 3DS RDIMMs - 4800 MHz		
4X77A77034	BNFC	ThinkSystem 128GB TruDDR5 4800MHz (4Rx4) 3DS RDIMM
4X77A77035	BNF8	ThinkSystem 256GB TruDDR5 4800MHz (8Rx4) 3DS RDIMM

9x4 RDIMMs (also known as Optimized or EC4 RDIMMs) are a new lower-cost DDR5 memory option supported in ThinkSystem V3 servers. 9x4 DIMMs offer the same performance as standard RDIMMs (known as 10x4 or EC8 modules), however they support lower fault-tolerance characteristics. Standard RDIMMs and 3DS RDIMMs support two 40-bit subchannels (that is, a total of 80 bits), whereas 9x4 RDIMMs support two 36-bit subchannels (a total of 72 bits). The extra bits in the subchannels allow standard RDIMMs and 3DS RDIMMs to support Single Device Data Correction (SDDC), however 9x4 RDIMMs do not support SDDC. Note, however, that all DDR5 DIMMs, including 9x4 RDIMMs, support Bounded Fault correction, which enables the server to correct most common types of DRAM failures.

For more information on DDR5 memory, see the Lenovo Press paper, *Introduction to DDR5 Memory*, available from https://lenovopress.com/lp1618.

The following rules apply when selecting the memory configuration:

- The server supports three types of DIMMs: 9x4 RDIMMs, RDIMMs, and 3DS RDIMMs; UDIMMs and LRDIMMs are not supported
- Mixing of DIMM types is not supported (9x4 DIMMs with 10x4 RDIMMs, 9x4 DIMMs with 3DS RDIMMs, 10x4 RDIMMs with 3DS RDIMMs)
- The mixing of 128GB 3DS RDIMMs and 256GB 3DS RDIMMs is supported, however all DIMM slots must be populated evenly: 8x 128GB DIMMs and 8x 256GB DIMMs per processor
- Mixing x4 and x8 DIMMs is not supported
- Mixing of DIMM rank counts is supported. Follow the required installation order installing the DIMMs with the higher rank counts first.
- Mixing of DIMM capacities is supported, however only two different capacities are supported across all channels of the processor (eg 16GB and 32GB). Follow the required installation order installing the larger DIMMs first.

For best performance, consider the following:

- Ensure the memory installed is at least the same speed as the memory bus of the selected processor.
- Populate all 8 memory channels.

The following memory protection technologies are supported:

- ECC detection/correction
- Bounded Fault detection/correction
- SDDC (for x4-based memory DIMMs; look for "x4" in the DIMM description)
- ADDDC (for 10x4-based memory DIMMs, not supported with 9x4 DIMMs)
- Memory mirroring

Note: Memory sparing is not supported

If memory channel mirroring is used, then DIMMs must be installed in pairs (minimum of one pair per processor), and both DIMMs in the pair must be identical in type and size. 50% of the installed capacity is available to the operating system. Memory rank sparing is not supported.

Internal storage

The SR650 V3 has three drive bay zones and supports up to 20x 3.5-inch or 40x 2.5-inch hot-swap drive bays or a combination of drive bays, depending on the selected chassis and backplane configuration. The server also supports configurations without any drive bays if desired.

The three drive bay zones are as follows:

- Front:
  - Up to 12x 3.5-inch hot-swap bays, or
  - Up to 24x 2.5-inch hot-swap bays
- Middle:
  - 4x 3.5-inch hot-swap bays, or
  - 8x 2.5-inch hot-swap bays
- Rear:
  - Up to 4x 3.5-inch hot-swap bays, or
  - Up to 8x 2.5-inch hot-swap bays
  - Also supports 2x 7mm hot-swap drives bays

All drives are hot-swap and are accessible from the front, from the rear, or from drive bays that are located in the middle of the server (accessible when you remove the top cover of the server).

The server also supports one or two M.2 drives, installed in an M.2 adapter internal to the server.

In this section:

- NVMe drive support
- Front drive bays
- Mid drive bays
- Rear drive bays
- Storage configurations
- Field upgrades
- RAID flash power module (supercap) support
- 7mm drives
- M.2 drives
- SED encryption key management with ISKLM

NVMe drive support

The SR650 V3 supports NVMe drives to maximize storage performance.

- Up to 32 NVMe drives (36 planned for 2023) in a 2.5-inch drive configuration, without oversubscription (that is, each x4 drive has a dedicated x4 (4 lanes) connection to the processor, either direct to the processor or via a retimer adapter)
  - Up to 24 installed in front bays

    - Up to 32 installed in front and mid bays
    - Up to 36 installed in front, mid and rear bays (rear support planned for 2023)
- Up to 8 NVMe drives in a 3.5-inch drive configuration, without oversubscription
    - All installed in mid bays

Riser 3 support: The use of the onboard NVMe ports is mutually exclusive with Riser 3, as these use the same PCIe connectors. See the System architecture section.

The specifics of these configurations are covered in the Storage configurations section. The tables in those sections indicate the number of NVMe drives in each configuration.

In addition, the SR650 V3 supports two 7mm NVMe drives for use as boot drives. These two drives optionally support RAID via Intel VROC.

The RAID 940-8i and RAID 940-16i adapters also support NVMe through a feature named Tri-Mode support (or Trimode support). This feature enables the use of NVMe U.3 drives at the same time as SAS and SATA drives. Cabling of the controller to the backplanes is the same as with SAS/SATA drives, and the NVMe drives are connected via a PCIe x1 link to the controller.

NVMe drives connected using Tri-Mode support provide better performance than SAS or SATA drives: A SATA SSD has a data rate of 6Gbps, a SAS SSD has a data rate of 12Gbps, whereas an NVMe U.3 Gen 4 SSD with a PCIe x1 link will have a data rate of 16Gbps. NVMe drives typically also have lower latency and higher IOPS compared to SAS and SATA drives. Tri-Mode is supported with U.3 NVMe drives in either 2.5-inch and 3.5-inch form factor and requires an AnyBay backplane.

Tri-Mode requires U.3 drives: Only NVMe drives with a U.3 interface are supported. U.2 drives are not supported. See the Internal drive options section for the U.3 drives supported by the server.

Front drive bays

The front drive bay zone supports the following configurations:

- 3.5-inch drive bays (all hot-swap)
  - No backplane and no drives (supports field upgrades)
  - 8x 3.5-inch SAS/SATA
  - 12x 3.5-inch SAS/SATA
  - 12x 3.5-inch SAS/SATA with an attached SAS expander for 4x rear bays
  - 8x 3.5-inch SAS/SATA + 4x 3.5-inch AnyBay
  - 8x 3.5-inch SAS/SATA + 4x 3.5-inch NVMe
- 2.5-inch drive bays (all hot-swap)
  - No backplane and no drives (supports field upgrades)
  - 8x SAS/SATA
  - 16x SAS/SATA
  - 24x SAS/SATA
  - 24x SAS/SATA with an attached SAS expander for 4x rear bays
  - 8x NVMe
  - 12x NVMe
  - 16x NVMe
  - 24x NVMe
  - 8x AnyBay
  - 16x AnyBay
  - 8x SAS/SATA + 8x AnyBay
  - 16x SAS/SATA + 8x AnyBay
  - 8x SAS/SATA + 8x NVMe
  - 16x SAS/SATA + 8x NVMe
  - 8x SAS/SATA + 16x NVMe
  - 8x AnyBay + 8x NVMe
  - 8x AnyBay + 16x NVMe
- 2.5-inch drive bays (all hot-swap) that support front PCIe slots
  - 16x SAS/SATA
  - 8x SAS/SATA + 8x NVMe
  - 8x SAS/SATA + 8x AnyBay

These configurations are shown in the following figures. The feature codes listed are the backplane feature codes when ordering CTO and correspond to the feature codes listed in the table below the figure. Note that NVMe and AnyBay backplanes may be available either PCIe Gen4 (G4) or PCIe Gen5 (G5) as listed in the figures.

Tip: Configurations with 8x or 16x total drive bays can be configured with or without an Integrated Diagnostics Panel with pull-out LCD display. With the Integrated Diagnostics Display, 8-bay configurations can be upgrade to 16 bays, however 16-bay configurations cannot be upgrade to 24 bays. See the Local management section for details.

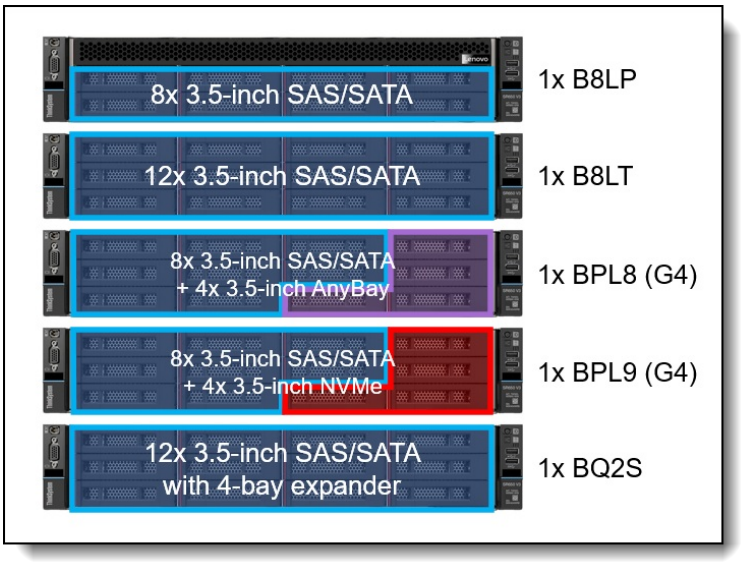

Figure 7. SR650 V3 front drive bay configurations - 3.5-inch drive bays

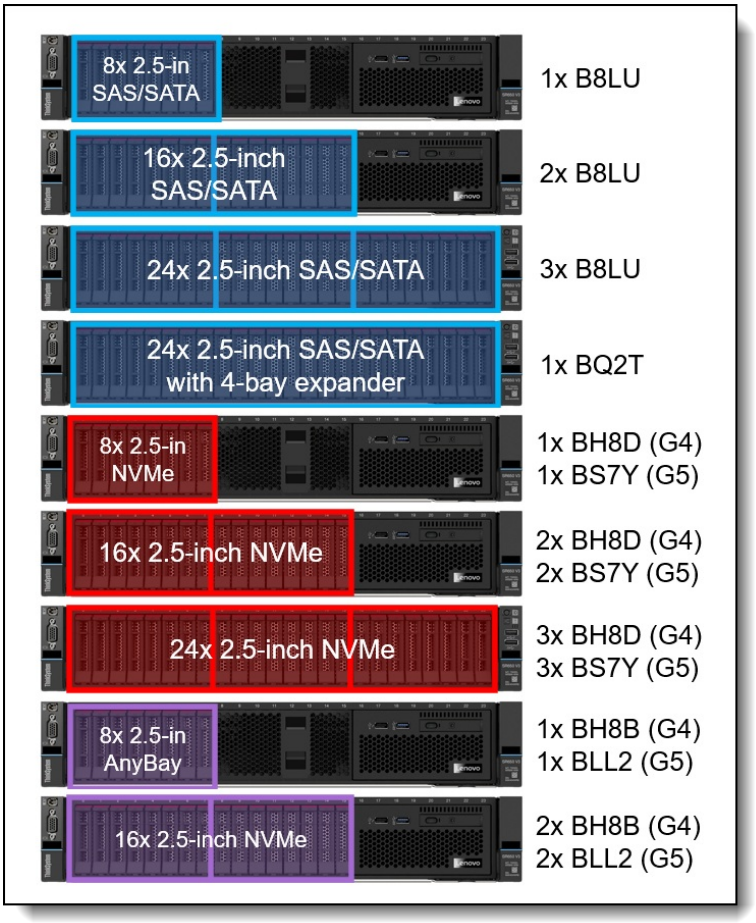

Figure 8. SR650 V3 front drive bay configurations - 2.5-inch drive bays, all the same drive type

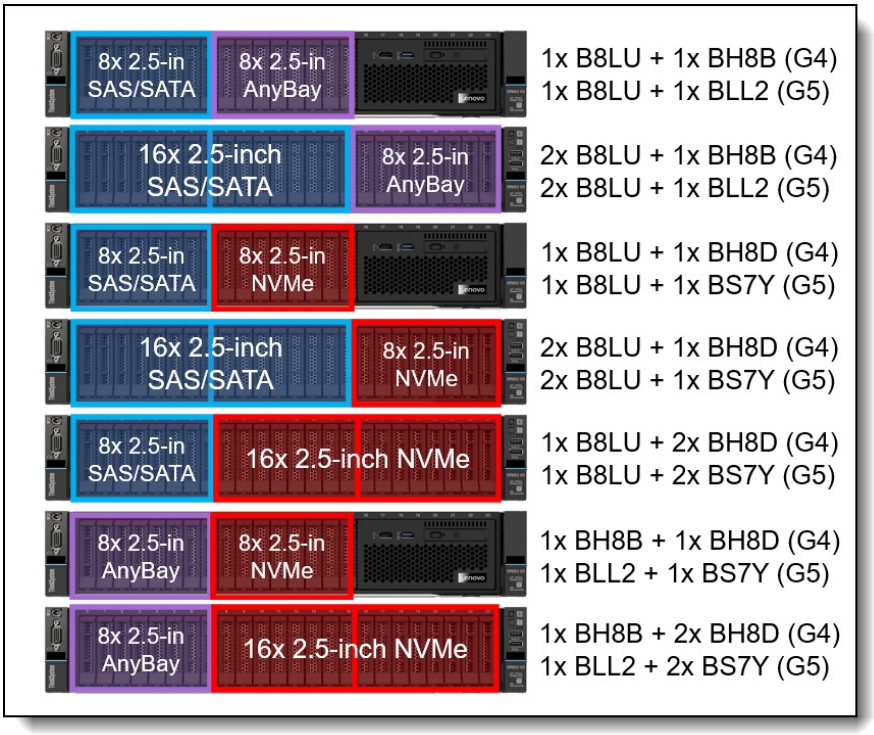

Figure 9. SR650 V3 front drive bay configurations - 2.5-inch drive bays, combinations

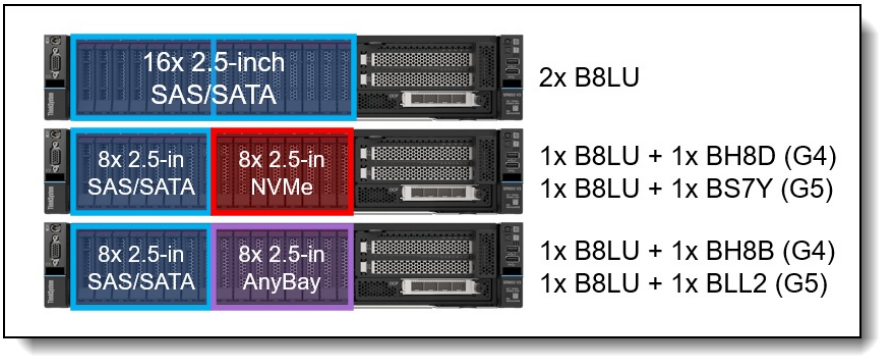

Figure 10. SR650 V3 front drive bay configurations - 2.5-inch drive bays with front PCIe slots (planned for 2Q/2023)

The backplanes used to provide these drive bays are listed in the following table.

Field upgrades: All front backplanes are available as part numbers for field upgrades along with require cable option kits, as described in the Field upgrades section below.

Table 12. Backplanes for front drive bays

Feature	Description	Bays	PCIe Gen	Maximum supported
Front 3.5-inch drive backplanes				
B8LP	ThinkSystem 2U 8x3.5" SAS/SATA Backplane	8	-	1
B8LT	ThinkSystem 2U 12x3.5" SAS/SATA Backplane	12	-	1
BPL8	ThinkSystem 2U 8x3.5" SAS/SATA+4 AnyBay Backplane	12	Gen4	1
BPL9	ThinkSystem 2U 8x3.5" SAS/SATA+4 NVMe Backplane	12	Gen4	1
BQ2S	ThinkSystem 2U 12x3.5" SAS/SATA with Rear 4-Bay Expander Backplane	12*	-	1
Front 2.5-inch drive backplanes				
B8LU	ThinkSystem 2U 8x2.5" SAS/SATA Backplane	8	-	3
BH8D	ThinkSystem 2U/4U 8x2.5" NVMe Backplane	8	Gen4	3
BS7Y	ThinkSystem 2U 8x2.5" Gen5 NVMe Backplane	8	Gen5	3
BH8B	ThinkSystem 2U/4U 8x2.5" AnyBay Backplane	8	Gen4	3
BLL2	ThinkSystem 2U 8x2.5" Gen5 AnyBay Backplane	8	Gen5	3
BQ2T	ThinkSystem 2U 24x2.5" SAS/SATA with Rear 4-Bay Expander Backplane	24*	-	1
Integrated Diagnostics Panel (for 2.5-inch configurations with 8 or 16 bays only)				
BMJA	ThinkSystem 2U 16x2.5" Front Operator Panel v2	-	-	1

* Backplane has an onboard SAS expander that provides connectivity to SAS/SATA drive bays in a separate rear backplane (order the rear backplane separately)

The use of front drive bays has the following configuration rules:

- If 3.5-inch front drive bays are used, an internal RAID adapter or HBA is not supported as the adapter and bays occupy the same physical space
- Any 8x 2.5-inch and 16x 2.5-inch drive configuration (SAS/SATA, AnyBay, or NVMe) can optionally be configured for use with the Integrated Diagnostics Panel as described in the Local management section. 3.5-inch drive configurations do not support the Integrated Diagnostics Panel.

Mid drive bays

The SR650 V3 supports hot-swap drives installed in the middle of the server chassis. The drive bays are accessible by removing the top lid of the server and levering the mid drive chassis up at the front.

The following configurations are supported:

- 4x 3.5-inch hot-swap SAS/SATA drive bays
- 8x 2.5-inch hot-swap SAS/SATA drive bays
- 8x 2.5-inch hot-swap NVMe drive bays

The drive bays in the open position are shown in the following figure.

M.2 support: When mid drive bays are configured, the M.2 adapter is installed on the mid drive bay mechanical as shown in the images.

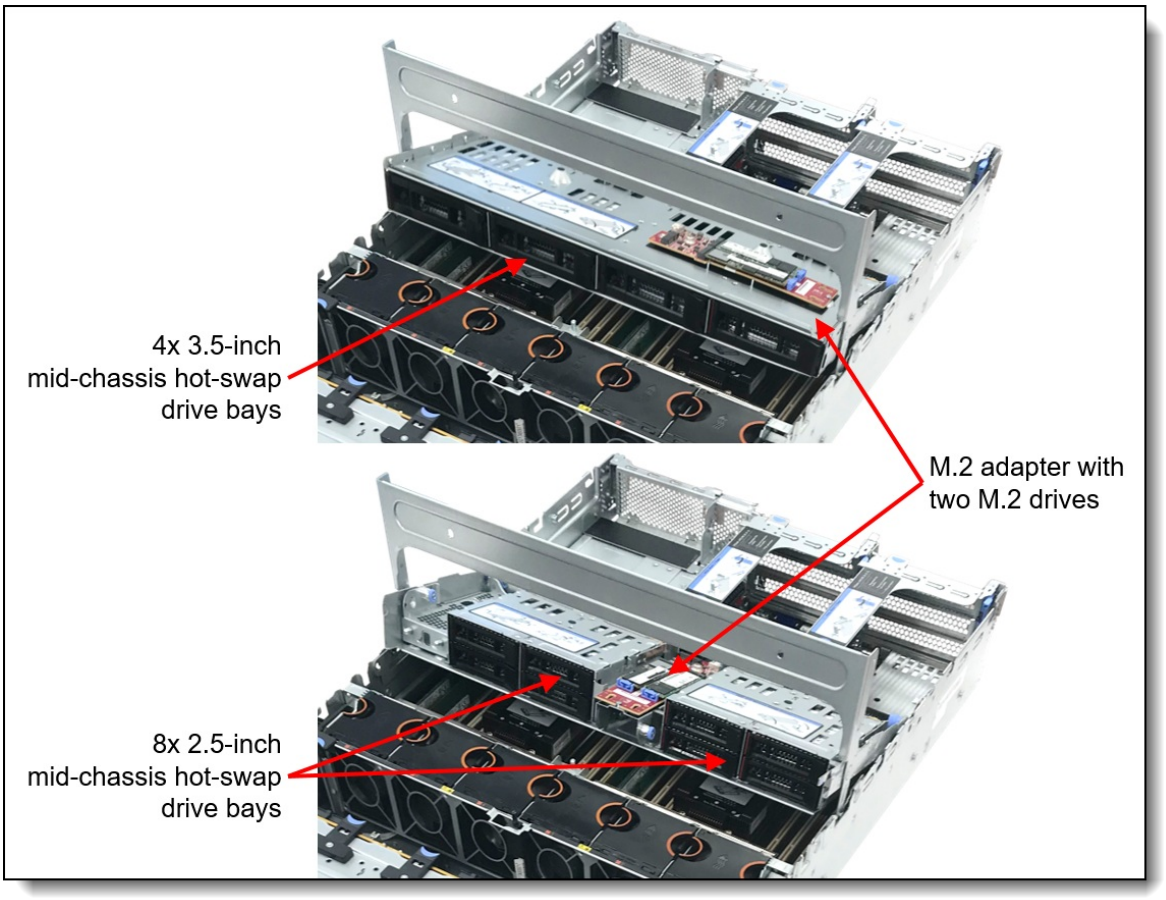

Figure 11. Mid-chassis drive bays

The backplanes used to provide these drive bays are listed in the following table.

Table 13. Backplanes for mid drive bays

Feature code	Description	Maximum supported
Mid - 3.5-inch drive backplane		
BCQK	ThinkSystem 2U 4x3.5" SAS/SATA Middle Backplane	1
Mid - 2.5-inch drive backplane		
BCQL	ThinkSystem 2U 4x2.5" SAS/SATA Middle Backplane	2‡
BDY7	ThinkSystem 2U 4x2.5" Middle NVMe Backplane	2‡

‡ 2.5-inch drive backplanes for the mid-chassis area must be installed in pairs. NVMe and SAS/SATA cannot be mixed.

Field upgrades: Backplanes are available as part numbers for field upgrades along with require cable option kits, as described in the Field upgrades section below.

The use of drive bays in the mid-chassis area has the following configuration rules:

- All processors are supported. Higher TDP processors will require the performance heatsinks.
- Full-length adapter cards are not supported
- GPUs (including low profile GPUs such as the NVIDIA A2) are not supported

- The use of mid drive bays requires Riser 1 be installed, since power for the mid bay backplanes comes from Riser 1

Rear drive bays

The SR650 V3 supports hot-swap drives installed at the rear of the server chassis. Supported configurations are as follows:

- 3.5-inch hot-swap drives
  - 2x SAS/SATA drive bays
  - 4x SAS/SATA drive bays
- 2.5-inch hot-swap drives
  - 4x SAS/SATA drive bays
  - 4x AnyBay drive bays
  - 8x SAS/SATA drive bays

The configurations are shown in the following figure.

Note: The 4x 2.5-inch AnyBay backplane (feature BSE3) is planned for support in 1H/2023.

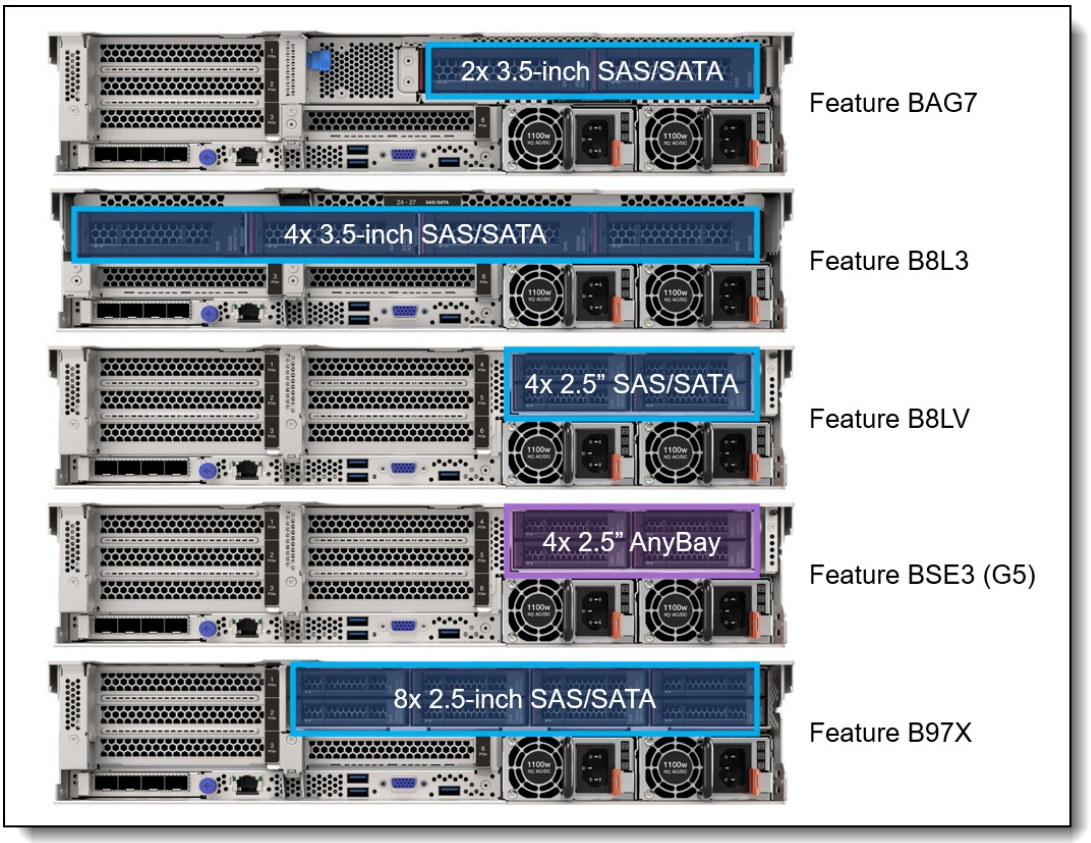

Figure 12. Rear 2.5-inch and 3.5-inch drive bay configurations

The backplanes used to provide these drive bays are listed in the following table.

7mm drives: The SR650 V3 supports two 7mm drives. See the 7mm drives section for details.

Table 14. Backplanes for rear drive bays

Feature code	Description	PCIe Gen	Maximum supported
Rear - 3.5-inch drive backplanes			
BAG7	ThinkSystem 2U 2x3.5" SAS/SATA Rear Backplane	-	1
B8L3	ThinkSystem 1U/2U 4x3.5" SAS/SATA Backplane	-	1
Rear - 2.5-inch drive backplanes			
B8LV	ThinkSystem 2U 4x2.5" SAS/SATA Backplane	-	1
BSE3	ThinkSystem 4x2.5" AnyBay Gen5 Backplane	Gen5	1*
B97X	ThinkSystem 2U 8x2.5" SAS/SATA Rear Backplane	1	1

* Planned to be supported in 1H/2023

Field upgrades: Backplanes are available as part numbers for field upgrades along with require cable option kits, as described in the Field upgrades section below.

The use of rear drive bays has the following configuration rules:

- The use of rear bays restricts the number of slots and the choice of risers that are supported. See the I/O expansion section for details.
- The use of rear drive bays may require that Riser 1 or Riser 2 be installed, since power for the rear backplane comes from that riser.

Storage configurations

This section describes the various combinations of front and rear drives that the server supports, as well as M.2 support.

In this section:

- Overview of configurations
- Details - Configurations with 3.5-inch front drive bays
- Details - Configurations with 2.5-inch front drive bays

Front PCIe slots: Support for front PCIe slots is planned for 2Q/2023.

Overview of configurations

The following tables summarize the storage configurations for the SR650 V3. For details, including processor requirements, M.2 and 7mm support, and controller selections, see the Storage configurations - Details section.

Storage configurations - 3.5-inch front drives

The following table summarizes the configurations that use 3.5-inch front drive bays.

Click to jump down to the details of the 3.5-inch configurations.

Table 15. Storage configurations - 3.5-inch front drives

Config	Total drives (NVMe)	Front			Mid			Rear				Backplanes
		SAS/ SATA	Any Bay	NVMe	3.5" SAS	2.5" SAS	2.5" NVMe	3.5" SAS	2.5" SAS	2.5" NVMe	2.5" Any	
1	8 (0)	8	0	0	0	0	0	0	0	0	0	8x3.5" SAS/SATA (B8LP)
2	12 (0)	12	0	0	0	0	0	0	0	0	0	12x3.5" SAS/SATA (B8LT)
3	14 (0)	12	0	0	0	0	0	2	0	0	0	**Front**: 12x3.5" SAS/SATA (B8LT); **Rear**: 2x3.5" SAS/SATA (BAG7)
4	16 (0)	12	0	0	0	0	0	4	0	0	0	**Front**: 12x3.5" SAS/SATA (B8LT); **Rear**: 4x3.5" SAS/SATA (B8L3)
5	16 (0)	12	0	0	0	0	0	0	4	0	0	**Front**: 12x3.5" SAS/SATA (B8LT); **Rear**: 4x2.5" SAS/SATA (B8LV)
6	20 (0)	12	0	0	4	0	0	4	0	0	0	**Front**: 12x3.5" SAS/SATA (B8LT); **Mid**: 4x3.5" SAS/SATA (BCQK); **Rear**: 4x3.5" SAS/SATA (B8L3)
6A	16 (0)	12	0	0	4	0	0	0	0	0	0	**Front**: 12x3.5" SAS/SATA (B8LT); **Mid**: 4x3.5" SAS/SATA (BCQK)
6B	16 (0)	12	0	0	0	4	0	0	0	0	0	**Front**: 12x3.5" SAS/SATA (B8LT); **Mid**: 4x2.5" SAS/SATA (BCQL)
7A	12 (4)	8	4	0	0	0	0	0	0	0	0	1x 8xS/S+ 4xABay (BPL8)
7B	12 (4)	8	0	4	0	0	0	0	0	0	0	1x 8xS/S+4xNVMe (BPL9)
8A	16 (4)	8	4	0	0	0	0	4	0	0	0	**Front**: 1x 8xS/S+ 4xABay (BPL8); **Rear**: 4x3.5" SAS/SATA (B8L3)
8B	16 (4)	8	0	4	0	0	0	4	0	0	0	**Front**: 1x 8xS/S+4xNVMe (BPL9); **Rear**: 4x3.5" SAS/SATA (B8L3)
26	20 (8)	12	0	0	0	0	8	0	0	0	0	**Front**: 12x3.5" SAS/SATA (B8LT); **Mid**: 2x 4x2.5" NVMe (BDY7)
42	12 (0)	12	0	0	0	0	0	0	0	0	0	12x3.5" SAS/SATA with Expander (BQ2S)
43	16 (0)	12	0	0	0	0	0	4	0	0	0	**Front**: 12x3.5" SAS/SATA with Expander (BQ2S); **Rear**: 4x3.5" SAS/SATA (B8L3)
44	16 (4)	12	0	0	0	0	0	0	0	0	4	**Front**: 12x3.5" SAS/SATA with Expander (BQ2S); **Rear**: 4x 2.5" AnyBay (BSE3)
45	14 (0)	12	0	0	0	0	0	2	0	0	0	**Front**: 12x3.5" SAS/SATA with Expander (BQ2S); **Rear**: 2x3.5" SAS/SATA (BAG7)
46	20 (0)	12	0	0	4	0	0	4	0	0	0	**Front**: 12x3.5" SAS/SATA with Expander (BQ2S); **Mid**: 4x3.5" SAS/SATA (BCQK); **Rear**: 4x3.5" SAS/SATA (B8L3)
54	16 (4)	12	0	0	0	0	0	0	0	0	4	**Front**: 12x3.5" SAS/SATA (B8LT); **Rear**: 4x 2.5" AnyBay (BSE3)

Storage configurations - 2.5-inch front drives

The following table summarizes the configurations that use 2.5-inch front drive bays.

Click to jump down to the details of the 2.5-inch configurations.

Table 16. Storage configurations - 2.5-inch front drives

Config	Total drives (NVMe)	Front			Mid			Rear				Backplanes
		SAS/ SATA	Any Bay	NVMe	3.5" SAS	2.5" SAS	2.5" NVMe	3.5" SAS	2.5" SAS	2.5" NVMe	2.5" Any	
9	8 (0)	8	0	0	0	0	0	0	0	0	0	1x 8x2.5" SAS/SATA (B8LU)
10	8 (8)	0	8	0	0	0	0	0	0	0	0	1x 8x2.5" AnyBay (BH8B)
11	8 (8)	0	0	8	0	0	0	0	0	0	0	1x 8x2.5" NVMe (BH8D)
12	16 (0)	16	0	0	0	0	0	0	0	0	0	2x 8x2.5" SAS/SATA (B8LU)
13	16 (16)	0	8	8	0	0	0	0	0	0	0	8xNVMe (BH8D) + 8xAnyBay (BH8B)
14A	16 (16)	0	0	16	0	0	0	0	0	0	0	2x 8xNVMe (BH8D)
14B	16 (16)	0	16	0	0	0	0	0	0	0	0	2x 8xAnyBay (BH8B)
15	16 (8)	8	8	0	0	0	0	0	0	0	0	1x 8x2.5" SAS/SATA (B8LU) + 1x 8x2.5" AnyBay (BH8B)
16	16 (8)	8	0	8	0	0	0	0	0	0	0	1x 8x2.5" SAS/SATA (B8LU) + 1x 8x2.5" NVMe (BH8D)
17	24 (8)	16	8	0	0	0	0	0	0	0	0	2x 8x2.5" SAS/SATA (B8LU) + 1x 8x2.5" AnyBay (BH8B)
18	24 (8)	16	0	8	0	0	0	0	0	0	0	2x 8x2.5" SAS/SATA (B8LU) + 1x 8x2.5" NVMe (BH8D)
19	24 (16)	8	0	16	0	0	0	0	0	0	0	1x 8x2.5" SAS/SATA (B8LU) + 2x 8x2.5" NVMe (BH8D)
19	24 (16)	8	16	0	0	0	0	0	0	0	0	1x 8x2.5" SAS/SATA (B8LU) + 2x 8xAnyBay (BH8B)
20	24 (0)	24	0	0	0	0	0	0	0	0	0	3x 8x2.5" SAS/SATA (B8LU)
21	24 (24)	0	0	24	0	0	0	0	0	0	0	3x 8xNVMe (BH8D)
21	24 (24)	0	24	0	0	0	0	0	0	0	0	3x 8xAnyBay (BH8B)
21A	24 (24)	0	8	16	0	0	0	0	0	0	0	1x 8xAnyBay (BH8B) + 2x 8xNVMe (BH8D)
22	28 (8)	16	8	0	0	0	0	0	4	0	0	**Front**: 2x 8x2.5" SAS/SATA (B8LU) + 1x 8x2.5" AnyBay (BH8B); **Rear**: 4x2.5" SAS/SATA (B8LV)
23	28 (0)	24	0	0	0	0	0	0	4	0	0	**Front**: 3x 8x2.5" SAS/SATA (B8LU); **Rear**: 4x2.5" SAS/SATA (B8LV)
23A	32 (0)	24	0	0	0	0	0	0	8	0	0	**Front**: 3x 8x2.5" SAS/SATA (B8LU); **Rear**: 8x2.5" SAS/SATA (B97X)
24	32 (32)	0	0	24	0	0	8	0	0	0	0	**Front**: 3x 8xNVMe (BH8D); **Mid**: 2x 4x2.5" NVMe (BDY7)
25	40 (0)	24	0	0	0	8	0	0	8	0	0	**Front**: 3x 8x2.5" SAS/SATA (B8LU); **Mid**: 2x 4x2.5" SAS/SATA (BCQL); **Rear**: 8x2.5" SAS/SATA (B97X)
25A	28 (0)	24	0	0	0	4	0	0	0	0	0	**Front**: 3x 8x2.5" SAS/SATA (B8LU); **Mid**: 4x2.5" SAS/SATA (BCQL)
25B	32 (0)	24	0	0	0	8	0	0	0	0	0	**Front**: 3x 8x2.5" SAS/SATA (B8LU); **Mid**: 2x 4x2.5" SAS/SATA (BCQL)

Config	Total drives (NVMe)	Front			Mid			Rear				Backplanes
		SAS/ SATA	Any Bay	NVMe	3.5" SAS	2.5" SAS	2.5" NVMe	3.5" SAS	2.5" SAS	2.5" NVMe	2.5" Any	
25C	36 (0)	24	0	0	0	8	0	0	4	0	0	**Front**: 3x 8x2.5" SAS/SATA (B8LU); **Mid**: 2x 4x2.5" SAS/SATA (BCQL); **Rear**: 4x2.5" SAS/SATA (B8LV)
27	14 (0)	14	0	0	0	0	0	0	0	0	0	2x 8x2.5" SAS/SATA
29A	16 (16)	0	16	0	0	0	0	0	0	0	0	2x 8xAnyBay (BH8B)
29B	16 (16)	0	16	0	0	0	0	0	0	0	0	2x 8xAnyBay (BH8B)
41	8 (8)	0	8	0	0	0	0	0	0	0	0	1x 8x2.5" AnyBay (BH8B)
47	24 (0)	24	0	0	0	0	0	0	0	0	0	24x2.5" SAS/SATA with Expander (BQ2T)
48	28 (0)	24	0	0	0	0	0	0	4	0	0	**Front**: 24x2.5" SAS/SATA with Expander (BQ2T); **Rear**: 4x2.5" SAS/SATA (B8LV)
49	28 (4)	24	0	0	0	0	0	0	0	0	4	**Front**: 24x2.5" SAS/SATA with Expander (BQ2T); **Rear**: 4x 2.5" AnyBay (BSE3)
50	32 (0)	24	0	0	0	0	0	0	8	0	0	**Front**: 24x2.5" SAS/SATA with Expander (BQ2T); **Rear**: 8x2.5" SAS/SATA (B97X)
51	28 (28)	0	0	24	0	0	0	0	0	0	4	**Front**: 3x 8xNVMe (BH8D); **Rear**: 4x 2.5" AnyBay (BSE3)
55	28 (4)	24	0	0	0	0	0	0	0	0	4	**Front**: 3x 8x2.5" SAS/SATA (B8LU); **Rear**: 4x 2.5" AnyBay (BSE3)
60	8 (8)	0	8	0	0	0	0	0	0	0	0	1x 8x2.5" AnyBay Gen5 (BLL2)
61	8 (8)	0	0	8	0	0	0	0	0	0	0	1x 8x2.5" NVMe Gen5 (BS7Y)
62	16 (16)	0	8	8	0	0	0	0	0	0	0	1x 8x2.5" AnyBay Gen5 (BLL2) + 1x 8x2.5" NVMe Gen5 (BS7Y)
63	16 (16)	0	0	16	0	0	0	0	0	0	0	2x 8x2.5" NVMe Gen5 (BS7Y)
64	16 (8)	8	8	0	0	0	0	0	0	0	0	1x 8x2.5" SAS/SATA (B8LU) + 1x 8x2.5" AnyBay Gen5 (BLL2)
65	16 (8)	8	0	8	0	0	0	0	0	0	0	1x 8x2.5" SAS/SATA (B8LU) + 1x 8x2.5" NVMe Gen5 (BS7Y)
67	24 (8)	16	8	0	0	0	0	0	0	0	0	2x 8x2.5" SAS/SATA (B8LU) + 1x 8x2.5" AnyBay Gen5 (BLL2)
68	24 (8)	16	0	8	0	0	0	0	0	0	0	2x 8x2.5" SAS/SATA (B8LU) + 1x 8x2.5" NVMe Gen5 (BS7Y)
69	24 (16)	8	0	16	0	0	0	0	0	0	0	1x 8x2.5" SAS/SATA (B8LU) + 2x 8x2.5" NVMe Gen5 (BS7Y)
70	24 (24)	0	0	24	0	0	0	0	0	0	0	3x 8x2.5" NVMe Gen5 (BS7Y)
71	24 (24)	0	8	16	0	0	0	0	0	0	0	1x 8x2.5" AnyBay Gen5 (BLL2) + 2x 8x2.5" NVMe Gen5 (BS7Y)
72	28 (8)	16	8	0	0	0	0	0	4	0	0	**Front**: 2x 8x2.5" SAS/SATA (B8LU) + 1x 8x2.5" AnyBay Gen5 (BLL2); **Rear**: 4x2.5" SAS/SATA (B8LV)
73	32 (32)	0	0	24	0	0	8	0	0	0	0	**Front**: 3x 8x2.5" NVMe Gen5 (BS7Y); **Mid**: 2x 4x2.5" NVMe (BDY7)
75A	16 (16)	0	16	0	0	0	0	0	0	0	0	2x 8x2.5" AnyBay Gen5 (BLL2)
75B	16 (16)	0	16	0	0	0	0	0	0	0	0	2x 8x2.5" AnyBay Gen5 (BLL2)

Config	Total drives (NVMe)	Front			Mid			Rear				Backplanes
		SAS/ SATA	Any Bay	NVMe	3.5" SAS	2.5" SAS	2.5" NVMe	3.5" SAS	2.5" SAS	2.5" NVMe	2.5" Any	
82A	8 (8)	0	8	0	0	0	0	0	0	0	0	1x 8x2.5" AnyBay Gen5 (BLL2)
82B	8 (8)	0	8	0	0	0	0	0	0	0	0	1x 8x2.5" AnyBay Gen5 (BLL2)
83A	8 (8)	0	0	8	0	0	0	0	0	0	0	1x 8x2.5" NVMe Gen5 (BS7Y)
83B	8 (8)	0	0	8	0	0	0	0	0	0	0	1x 8x2.5" NVMe Gen5 (BS7Y)
84A	16 (8)	8	8	0	0	0	0	0	0	0	0	1x 8x2.5" SAS/SATA (B8LU) + 1x 8x2.5" AnyBay Gen5 (BLL2)
84B	16 (8)	8	8	0	0	0	0	0	0	0	0	
85A	16 (8)	8	0	8	0	0	0	0	0	0	0	1x 8x2.5" SAS/SATA (B8LU) + 1x 8x2.5" NVMe Gen5 (BS7Y)
85B	16 (8)	8	0	8	0	0	0	0	0	0	0	1x 8x2.5" SAS/SATA (B8LU) + 1x 8x2.5" NVMe Gen5 (BS7Y)
86A	24 (8)	16	8	0	0	0	0	0	0	0	0	2x 8x2.5" SAS/SATA (B8LU) + 1x 8x2.5" AnyBay Gen5 (BLL2)
86B	24 (8)	16	8	0	0	0	0	0	0	0	0	2x 8x2.5" SAS/SATA (B8LU) + 1x 8x2.5" AnyBay Gen5 (BLL2)
87A	24 (8)	16	0	8	0	0	0	0	0	0	0	2x 8x2.5" SAS/SATA (B8LU) + 1x 8x2.5" NVMe Gen5 (BS7Y)
87B	24 (8)	16	0	8	0	0	0	0	0	0	0	2x 8x2.5" SAS/SATA (B8LU) + 1x 8x2.5" NVMe Gen5 (BS7Y)
88	12 (12)	0	0	12	0	0	0	0	0	0	0	2x 8xNVMe (BH8D)
89A	16 (16)	0	0	16	0	0	0	0	0	0	0	2x 8x2.5" NVMe Gen5 (BS7Y)
89B	16 (16)	0	0	16	0	0	0	0	0	0	0	2x 8x2.5" NVMe Gen5 (BS7Y)
89C	16 (16)	0	0	16	0	0	0	0	0	0	0	2x 8x2.5" NVMe Gen5 (BS7Y)
90A	16 (16)	0	8	8	0	0	0	0	0	0	0	1x 8x2.5" AnyBay Gen5 (BLL2) + 1x 8x2.5" NVMe Gen5 (BS7Y)
90B	16 (16)	0	8	8	0	0	0	0	0	0	0	1x 8x2.5" AnyBay Gen5 (BLL2) + 1x 8x2.5" NVMe Gen5 (BS7Y)
91	16 (16)	0	8	8	0	0	0	0	0	0	0	1x 8x2.5" AnyBay Gen5 (BLL2) + 1x 8x2.5" NVMe Gen5 (BS7Y)
91A	24 (16)	8	0	16	0	0	0	0	0	0	0	1x 8x2.5" SAS/SATA (B8LU) + 2x 8x2.5" NVMe Gen5 (BS7Y)
91B	24 (16)	8	0	16	0	0	0	0	0	0	0	1x 8x2.5" SAS/SATA (B8LU) + 2x 8x2.5" NVMe Gen5 (BS7Y)
92	16 (12)	4	12	0	0	0	0	0	0	0	0	2x 8x2.5" AnyBay Gen5 (BLL2)
93A	16 (16)	0	16	0	0	0	0	0	0	0	0	2x 8x2.5" AnyBay Gen5 (BLL2)
93B	16 (16)	0	16	0	0	0	0	0	0	0	0	2x 8x2.5" AnyBay Gen5 (BLL2)
93C	16 (16)	0	16	0	0	0	0	0	0	0	0	2x 8x2.5" AnyBay Gen5 (BLL2)
93D	16 (16)	0	16	0	0	0	0	0	0	0	0	2x 8x2.5" AnyBay Gen5 (BLL2)
94A	24 (24)	0	0	24	0	0	0	0	0	0	0	3x 8x2.5" NVMe Gen5 (BS7Y)
94B	24 (24)	0	0	24	0	0	0	0	0	0	0	3x 8x2.5" NVMe Gen5 (BS7Y)
95A	24 (24)	0	8	16	0	0	0	0	0	0	0	1x 8x2.5" AnyBay Gen5 (BLL2) + 2x 8x2.5" NVMe Gen5 (BS7Y)
95B	24 (24)	0	8	16	0	0	0	0	0	0	0	1x 8x2.5" AnyBay Gen5 (BLL2) + 2x 8x2.5" NVMe Gen5 (BS7Y)
96	28 (8)	16	8	0	0	0	0	0	4	0	0	**Front**: 2x 8x2.5" SAS/SATA (B8LU) + 1x 8x2.5" AnyBay Gen5 (BLL2); **Rear**: 4x2.5" SAS/SATA (B8LV)

Config	Total drives (NVMe)	Front			Mid			Rear				Backplanes
		SAS/ SATA	Any Bay	NVMe	3.5" SAS	2.5" SAS	2.5" NVMe	3.5" SAS	2.5" SAS	2.5" NVMe	2.5" Any	
97	32 (32)	0	0	24	0	0	8	0	0	0	0	**Front**: 3x 8x2.5" NVMe Gen5 (BS7Y); **Mid**: 2x 4x2.5" NVMe (BDY7)
98	28 (28)	0	0	24	0	0	0	0	0	0	4	**Front**: 3x 8x2.5" NVMe Gen5 (BS7Y); **Rear**: 4x 2.5" AnyBay (BSE3)

Details - 3.5-inch front bays

The following table lists the detailed configurations that use 3.5-inch front drive bays.

Click to go back to the overview of 3.5-inch configurations.

Note: 7mm and M.2 support is to be determined.

Table 17. Details - 3.5-inch front bays

Config	CPUs	Front			Mid			Rear				Backplanes	7mm	M.2	Supported controllers
		SAS/ SATA	Any Bay	NVMe	3.5" SAS	2.5" SAS	2.5" NVMe	3.5" SAS	2.5" SAS	2.5" NVMe	2.5" Any				
1-1	1 or 2	8	0	0	0	0	0	0	0	0	0	8x3.5" SAS/SATA (B8LP)			OB SATA
1-2	1 or 2														(5350-8i or 9350-8i or 4350-8i)
1-3	1 or 2														(940-8i or 540-8i or 440-8i)
2-1	1 or 2	12	0	0	0	0	0	0	0	0	0	12x3.5" SAS/SATA (B8LT)			OB SATA
2-2	1 or 2														(9350-16i or 4350-16i)
2-3	1 or 2														(940-16i or 540-16i or 440-16i)
3-1	1 or 2	12	0	0	0	0	0	2	0	0	0	**Front**: 12x3.5" SAS/SATA (B8LT); **Rear**: 2x3.5" SAS/SATA (BAG7)			OB SATA
3-2	1 or 2														(9350-16i or 4350-16i)
3-3	1 or 2														(940-16i or 540-16i or 440-16i)
4-1	1 or 2	12	0	0	0	0	0	4	0	0	0	**Front**: 12x3.5" SAS/SATA (B8LT); **Rear**: 4x3.5" SAS/SATA (B8L3)			(9350-16i or 4350-16i)
4-2	1 or 2														(940-16i or 540-16i or 440-16i)
5-1	1 or 2	12	0	0	0	0	0	0	4	0	0	**Front**: 12x3.5" SAS/SATA (B8LT); **Rear**: 4x2.5" SAS/SATA (B8LV)			(9350-16i or 4350-16i)
5-2	1 or 2														(940-16i or 540-16i or 440-16i)

Config	CPUs	Front			Mid			Rear				Backplanes	7m	M.	Supported controllers
		SAS/ SATA	Any Bay	NVMe	3.5" SAS	2.5" SAS	2.5" NVMe	3.5" SAS	2.5" SAS	2.5" NVMe	2.5" Any				
6-1	1 or 2	12	0	0	4	0	0	4	0	0	0	**Front**: 12x3.5" SAS/SATA (B8LT); **Mid**: 4x3.5" SAS/SATA (BCQK); **Rear**: 4x3.5" SAS/SATA (B8L3)			940-32i
6A-1	1 or 2	12	0	0	4	0	0	0	0	0	0	**Front**: 12x3.5" SAS/SATA (B8LT); **Mid**: 4x3.5" SAS/SATA (BCQK)			(9350-16i or 4350-16i)
6A-2	1 or 2														(940-16i or 540-16i or 440-16i)
6B-1	1 or 2	12	0	0	0	4	0	0	0	0	0	**Front**: 12x3.5" SAS/SATA (B8LT); **Mid**: 4x2.5" SAS/SATA (BCQL)			(9350-16i or 4350-16i)
6B-2	1 or 2														(940-16i or 540-16i or 440-16i)
7A-1	1 or 2	8	4	0	0	0	0	0	0	0	0	1x 8xS/S+ 4xABay (BPL8)			OB SATA + OB NVMe
7A-2	1 or 2														(9350-16i or 4350-16i) + OB NVMe
7A-3	1 or 2														(940-16i or 540-16i or 440-16i) + OB NVMe
7B-1	1 or 2	8	0	4	0	0	0	0	0	0	0	1x 8xS/S+4xNVMe (BPL9)			OB SATA + OB NVMe
7B-2	1 or 2														(5350-8i or 9350-8i or 4350-8i) + OB NVMe
7B-3	1 or 2														(940-8i or 540-8i or 440-8i) + OB NVMe
8A-1	1 or 2	8	4	0	0	0	0	4	0	0	0	**Front**: 1x 8xS/S+ 4xABay (BPL8); **Rear**: 4x3.5" SAS/SATA (B8L3)			(9350-16i or 4350-16i) + OB NVMe
8A-2	1 or 2														(940-16i or 540-16i or 440-16i) + OB NVMe
8B-1	Error	8	0	4	0	0	0	4	0	0	0	**Front**: 1x 8xS/S+4xNVMe (BPL9); **Rear**: 4x3.5" SAS/SATA (B8L3)			(9350-16i or 4350-16i) + OB NVMe
8B-2	Error														(940-16i or 540-16i or 440-16i) + OB NVMe

Config	CPUs	Front			Mid			Rear				Backplanes	7m	M.	Supported controllers
		SAS/ SATA	Any Bay	NVMe	3.5" SAS	2.5" SAS	2.5" NVMe	3.5" SAS	2.5" SAS	2.5" NVMe	2.5" Any				
26-1	2 only	12	0	0	0	0	8	0	0	0	0	**Front**: 12x3.5" SAS/SATA (B8LT); **Mid**: 2x 4x2.5" NVMe (BDY7)			**Front**: OB SATA; **Mid**: OB NVMe
26-2	2 only														**Front**: (9350-16i or 4350-16i); **Mid**: OB NVMe
26-3	2 only														**Front**: (940-16i or 540-16i or 440-16i); **Mid**: OB NVMe
42-1	1 or 2	12	0	0	0	0	0	0	0	0	0	12x3.5" SAS/SATA with Expander (BQ2S)			(5350-8i or 9350-8i or 4350-8i)
42-2	1 or 2														(940-8i or 540-8i or 440-8i)
43-1	1 or 2	12	0	0	0	0	0	4	0	0	0	**Front**: 12x3.5" SAS/SATA with Expander (BQ2S); **Rear**: 4x3.5" SAS/SATA (B8L3)			(5350-8i or 9350-8i or 4350-8i)
43-2	1 or 2														(940-8i or 540-8i or 440-8i)
44-1	1 or 2	12	0	0	0	0	0	0	0	0	4	**Front**: 12x3.5" SAS/SATA with Expander (BQ2S); **Rear**: 4x 2.5" AnyBay (BSE3)			**Front**: (5350-8i or 9350-8i or 4350-8i); **Rear**: OB NVMe
44-2	1 or 2														**Front**: (940-8i or 540-8i or 440-8i); **Rear**: OB NVMe
45-1	1 or 2	12	0	0	0	0	0	2	0	0	0	**Front**: 12x3.5" SAS/SATA with Expander (BQ2S); **Rear**: 2x3.5" SAS/SATA (BAG7)			(5350-8i or 9350-8i or 4350-8i)
45-2	1 or 2														(940-8i or 540-8i or 440-8i)
46-1	1 or 2	12	0	0	4	0	0	4	0	0	0	**Front**: 12x3.5" SAS/SATA with Expander (BQ2S); **Mid**: 4x3.5" SAS/SATA (BCQK); **Rear**: 4x3.5" SAS/SATA (B8L3)			(9350-16i or 4350-16i)
46-2	1 or 2														(940-16i or 540-16i or 440-16i)

Config	CPUs	Front			Mid			Rear				Backplanes	7m	M.	Supported controllers
		SAS/ SATA	Any Bay	NVMe	3.5" SAS	2.5" SAS	2.5" NVMe	3.5" SAS	2.5" SAS	2.5" NVMe	2.5" Any				
54-1	1 or 2	12	0	0	0	0	0	0	0	0	4	**Front**: 12x3.5" SAS/SATA (B8LT); **Rear**: 4x 2.5" AnyBay (BSE3)			(9350-16i or 4350-16i) + OB NVMe
54-2	1 or 2														(940-16i or 540-16i or 440-16i) + OB NVMe

Details - 2.5-inch front bays

The following table lists the detailed configurations that use 2.5-inch front drive bays.

Click to go back to the overview of 2.5-inch configurations.

Note: 7mm and M.2 support is to be determined.

Table 18. Details - 2.5-inch front bays

Config	CPUs	Front			Mid			Rear				Backplanes	7mm	M.2	Supported controllers
		SAS/ SATA	Any Bay	NVMe	3.5" SAS	2.5" SAS	2.5" NVMe	3.5" SAS	2.5" SAS	2.5" NVMe	2.5" Any				
9-1	1 or 2	8	0	0	0	0	0	0	0	0	0	1x 8x2.5" SAS/SATA (B8LU)			OB SATA
9-2	1 or 2														(5350-8i or 9350-8i or 4350-8i)
9-3	1 or 2														(940-8i or 540-8i or 440-8i)
9-4	1 or 2														(9350-16i or 4350-16i)
9-5	1 or 2														(940-16i or 540-16i or 440-16i)
9-6	2 only														(5350-8i or 9350-16i CFF or 940-16i CFF or 440-16i CFF)
9-6-1	1 only														(5350-8i or 9350-16i CFF or 940-16i CFF or 440-16i CFF)
10-1	1 or 2	0	8	0	0	0	0	0	0	0	0	1x 8x2.5" AnyBay (BH8B)			(5350-8i or 9350-8i or 4350-8i) + OB NVMe
10-2	1 or 2														(940-8i or 540-8i or 440-8i) + OB NVMe
10-3	1 or 2														(9350-16i or 4350-16i) + OB NVMe

Config	CPUs	Front			Mid			Rear				Backplanes	7m	M.	Supported controllers
		SAS/ SATA	Any Bay	NVMe	3.5" SAS	2.5" SAS	2.5" NVMe	3.5" SAS	2.5" SAS	2.5" NVMe	2.5" Any				
10-4	1 or 2														(940-16i or 540-16i or 440-16i) + OB NVMe
10-5	1 or 2														(5350-8i or 9350-16i CFF or 940-16i CFF or 440-16i CFF) + OB NVMe
10-6	1 or 2														(5350-8i or 9350-8i or 4350-8i) + OB NVMe
10-7	1 or 2														(940-8i or 540-8i or 440-8i) + OB NVMe
10-8	1 or 2														(9350-16i or 4350-16i) + OB NVMe
10-9	1 or 2														(940-16i or 540-16i or 440-16i) + OB NVMe
11-1	1 or 2	0	0	8	0	0	0	0	0	0	0	1x 8x2.5" NVMe (BH8D)			OB NVMe
11-2	1 or 2														OB NVMe
12-1	1 or 2	16	0	0	0	0	0	0	0	0	0	2x 8x2.5" SAS/SATA (B8LU)			(9350-16i or 4350-16i)
12-2	1 or 2														(940-16i or 540-16i or 440-16i)
12-3	1 or 2														(2x 5350-8i or 2x 9350-8i or 2x 4350-8i)
12-4	1 or 2														2x (940-8i or 540-8i or 440-8i)
12-5	2 only														(9350-16i CFF or 940-16i CFF or 440-16i CFF)
12-5-1	1 only														(9350-16i CFF or 940-16i CFF or 440-16i CFF)
12-6	1 or 2														(5350-8i or 9350-8i or 4350-8i) + OB SATA
12-7	1 or 2														(940-8i or 540-8i or 440-8i) + OB SATA

Config	CPUs	Front			Mid			Rear				Backplanes	7m	M.2	Supported controllers
		SAS/ SATA	Any Bay	NVMe	3.5" SAS	2.5" SAS	2.5" NVMe	3.5" SAS	2.5" SAS	2.5" NVMe	2.5" Any				
13-1	2 only	0	8	8	0	0	0	0	0	0	0	8xNVMe (BH8D) + 8xAnyBay (BH8B)			(5350-8i or 9350-8i or 4350-8i) + OB NVMe
13-2	2 only														(940-8i or 540-8i or 440-8i) + OB NVMe
13-3	2 only														(5350-8i or 9350-16i CFF or 940-16i CFF or 440-16i CFF) + OB NVMe
14A-1	2 only	0	0	16	0	0	0	0	0	0	0	2x 8xNVMe (BH8D)			OB NVMe
14B-1	1 or 2	0	16	0	0	0	0	0	0	0	0	2x 8xAnyBay (BH8B)			940-16i Tri-mode
14B-2	1 or 2														2x 940-8i Tri-mode
15-1	1 or 2	8	8	0	0	0	0	0	0	0	0	1x 8x2.5" SAS/SATA (B8LU) + 1x 8x2.5" AnyBay (BH8B)			(9350-16i or 4350-16i) + OB NVMe
15-2	1 or 2														(940-16i or 540-16i or 440-16i) + OB NVMe
15-3	1 or 2														(2x 5350-8i or 2x 9350-8i or 2x 4350-8i) + OB NVMe
15-4	1 or 2														2x (940-8i or 540-8i or 440-8i) + OB NVMe
15-5	1 or 2														(9350-16i CFF or 940-16i CFF or 440-16i CFF) + OB NVMe
15-6	1 or 2														(9350-16i or 4350-16i) + OB NVMe
15-7	1 or 2														(940-16i or 540-16i or 440-16i) + OB NVMe
15-8	1 or 2														(2x 5350-8i or 2x 9350-8i or 2x 4350-8i) + OB NVMe
15-9	1 or 2														2x (940-8i or 540-8i or 440-8i) + OB NVMe

Config	CPUs	Front			Mid			Rear				Backplanes	7m	M.2	Supported controllers
		SAS/ SATA	Any Bay	NVMe	3.5" SAS	2.5" SAS	2.5" NVMe	3.5" SAS	2.5" SAS	2.5" NVMe	2.5" Any				
16-1	1 or 2	8	0	8	0	0	0	0	0	0	0	1x 8x2.5" SAS/SATA (B8LU) + 1x 8x2.5" NVMe (BH8D)			OB SATA + OB NVMe
16-2	1 or 2														(5350-8i or 9350-8i or 4350-8i) + OB NVMe
16-3	1 or 2														(940-8i or 540-8i or 440-8i) + OB NVMe
16-3-1	1 or 2														(5350-8i or 9350-16i CFF or 940-16i CFF or 440-16i CFF) + OB NVMe
16-4	1 or 2														OB SATA + OB NVMe
16-5	1 or 2														(5350-8i or 9350-8i or 4350-8i) + OB NVMe
16-6	1 or 2														(940-8i or 540-8i or 440-8i) + OB NVMe
17-1	1 or 2	16	8	0	0	0	0	0	0	0	0	2x 8x2.5" SAS/SATA (B8LU) + 1x 8x2.5" AnyBay (BH8B)			940-32i + OB NVMe
17-2	1 or 2														(5350-8i or 9350-8i or 4350-8i) + OB NVMe + Exp-44i
17-3	1 or 2														(940-8i or 540-8i or 440-8i) + OB NVMe + Exp-44i
17-4	1 or 2														(9350-16i CFF or 940-16i CFF or 440-16i CFF) + OB NVMe + Exp-44i
17-5	1 or 2														3x (940-8i or 540-8i or 440-8i) + OB NVMe
17-6	1 or 2														940-32i + OB NVMe
17-7	1 or 2														(5350-8i or 9350-8i or 4350-8i) + OB NVMe + Exp-44i

Config	CPUs	Front			Mid			Rear				Backplanes	7m	M.	Supported controllers
		SAS/ SATA	Any Bay	NVMe	3.5" SAS	2.5" SAS	2.5" NVMe	3.5" SAS	2.5" SAS	2.5" NVMe	2.5" Any				
17-8	1 or 2														(940-8i or 540-8i or 440-8i) + OB NVMe + Exp-44i
18-1-1	1 or 2	16	0	8	0	0	0	0	0	0	0	2x 8x2.5" SAS/SATA (B8LU) + 1x 8x2.5" NVMe (BH8D)			(9350-16i or 4350-16i) + OB NVMe
18-1	1 or 2														(940-16i or 540-16i or 440-16i) + OB NVMe
18-2	1 or 2														(5350-8i or 9350-8i or 4350-8i) + OB NVMe + Exp-44i
18-3	1 or 2														(940-8i or 540-8i or 440-8i) + OB NVMe + Exp-44i
18-4	1 or 2														(5350-8i or 9350-8i or 4350-8i) + OB NVMe + Exp-44i
18-5	1 or 2														(940-8i or 540-8i or 440-8i) + OB NVMe + Exp-44i
19-1	2 only	8	0	16	0	0	0	0	0	0	0	1x 8x2.5" SAS/SATA (B8LU) + 2x 8x2.5" NVMe (BH8D)			(5350-8i or 9350-8i or 4350-8i) + OB NVMe
19-2	2 only														(940-8i or 540-8i or 440-8i) + OB NVMe
19-3	1 or 2	8	16	0	0	0	0	0	0	0	0	1x 8x2.5" SAS/SATA (B8LU) + 2x 8xAnyBay (BH8B)			(940-8i or 540-8i or 440-8i) + 940-16i Tri-mode
20-1	1 or 2	24	0	0	0	0	0	0	0	0	0	3x 8x2.5" SAS/SATA (B8LU)			940-32i
20-2	1 or 2														(9350-16i CFF or 940-16i CFF or 440-16i CFF) + Exp-44i
20-2-1	1 only														(9350-16i CFF or 940-16i CFF or 440-16i CFF) + Exp-44i

Config	CPUs	Front			Mid			Rear				Backplanes	7m	M.2	Supported controllers
		SAS/ SATA	Any Bay	NVMe	3.5" SAS	2.5" SAS	2.5" NVMe	3.5" SAS	2.5" SAS	2.5" NVMe	2.5" Any				
20-3	1 or 2														(5350-8i or 9350-8i or 4350-8i) + Exp-44i
20-4	1 or 2														(940-8i or 540-8i or 440-8i) + Exp-44i
20-5	1 or 2														3x (5350-8i or 9350-8i or 4350-8i)
20-6	1 or 2														3x (940-8i or 540-8i or 440-8i)
20-7	1 or 2														(9350-16i or 4350-16i) + (5350-8i or 9350-8i or 4350-8i)
20-8	1 or 2														(940-16i or 540-16i or 440-16i) + (940-8i or 540-8i or 440-8i)
21-1	2 only	0	0	24	0	0	0	0	0	0	0	3x 8xNVMe (BH8D)			OB NVMe + Retimer
21-2	1 or 2	0	24	0	0	0	0	0	0	0	0	3x 8xAnyBay (BH8B)			940-16i Tri-mode + 940-8i Tri-mode
21-3	1 or 2														3x 940-8i Tri-mode
21A-1	2 only	0	8	16	0	0	0	0	0	0	0	1x 8xAnyBay (BH8B) + 2x 8xNVMe (BH8D)			(5350-8i or 9350-8i or 4350-8i) + OB NVMe + 1x Retimer
21A-2	2 only														(940-8i or 540-8i or 440-8i) + OB NVMe + 1x Retimer
22-1	1 or 2	16	8	0	0	0	0	0	4	0	0	**Front**: 2x 8x2.5" SAS/SATA (B8LU) + 1x 8x2.5" AnyBay (BH8B); **Rear**: 4x2.5" SAS/SATA (B8LV)			940-32i + OB NVMe
22-2	1 or 2														(5350-8i or 9350-8i or 4350-8i) + OB NVMe + Exp-44i
22-3	1 or 2														(940-8i or 540-8i or 440-8i) + OB NVMe + Exp-44i

Config	CPUs	Front			Mid			Rear				Backplanes	7m	M.	Supported controllers
		SAS/ SATA	Any Bay	NVMe	3.5" SAS	2.5" SAS	2.5" NVMe	3.5" SAS	2.5" SAS	2.5" NVMe	2.5" Any				
22-4	1 or 2														(9350-16i CFF or 940-16i CFF or 440-16i CFF) + OB NVMe + Exp-44i
22-5	1 or 2														4x (5350-8i or 9350-8i or 4350-8i) + OB NVMe
22-6	1 or 2														4x (940-8i or 540-8i or 440-8i) + OB NVMe
22-7	1 or 2														940-32i + OB NVMe
22-8	1 or 2														(5350-8i or 9350-8i or 4350-8i) + OB NVMe + Exp-44i
22-9	1 or 2														(940-8i or 540-8i or 440-8i) + OB NVMe + Exp-44i
23-1	1 or 2	24	0	0	0	0	0	0	4	0	0	**Front**: 3x 8x2.5" SAS/SATA (B8LU); **Rear**: 4x2.5" SAS/SATA (B8LV)			940-32i
23-2	1 or 2														(5350-8i or 9350-8i or 4350-8i) + Exp-44i
23-3	1 or 2														(940-8i or 540-8i or 440-8i) + Exp-44i
23-4	1 or 2														(9350-16i or 4350-16i) + Exp-44i
23-5	1 or 2														(940-16i or 540-16i or 440-16i) + Exp-44i
23-6	1 or 2														(9350-16i CFF or 940-16i CFF or 440-16i CFF) + Exp-44i
23-6-1	1 only														(9350-16i CFF or 940-16i CFF or 440-16i CFF) + Exp-44i

Config	CPUs	Front			Mid			Rear				Backplanes	7m	M.	Supported controllers
		SAS/ SATA	Any Bay	NVMe	3.5" SAS	2.5" SAS	2.5" NVMe	3.5" SAS	2.5" SAS	2.5" NVMe	2.5" Any				
23A-1	1 or 2	24	0	0	0	0	0	0	8	0	0	**Front**: 3x 8x2.5" SAS/SATA (B8LU); **Rear**: 8x2.5" SAS/SATA (B97X)			940-32i
23A-2	1 or 2														2x (9350-16i or 4350-16i)
23A-3	1 or 2														2x (940-16i or 540-16i or 440-16i)
23A-4	1 or 2														9350-16i CFF + (9350-16i or 4350-16i)
23A-4-1	1 only														9350-16i CFF + (9350-16i or 4350-16i)
23A-5	1 or 2														(940-16i CFF or 440-16i CFF) + (940-16i or 540-16i or 440-16i)
23A-5-1	1 only														(940-16i CFF or 440-16i CFF) + (940-16i or 540-16i or 440-16i)
23A-6	1 or 2														(5350-8i or 9350-8i or 4350-8i) + Exp-44i
23A-7	1 or 2														(940-8i or 540-8i or 440-8i) + Exp-44i
23A-8	1 or 2														(9350-16i or 4350-16i) + Exp-44i
23A-9	1 or 2														(940-16i or 540-16i or 440-16i) + Exp-44i
23A-10	1 or 2														(9350-16i CFF or 940-16i CFF or 440-16i CFF) + Exp-44i
23A-10-1	1 or 2														(9350-16i CFF or 940-16i CFF or 440-16i CFF) + Exp-44i
24-1	2 only	0	0	24	0	0	8	0	0	0	0	**Front**: 3x 8xNVMe (BH8D); **Mid**: 2x 4x2.5" NVMe (BDY7)			**Front**: OB NVMe + Retimer; **Mid**: 2x Retimer

Config	CPUs	Front			Mid			Rear				Backplanes	7m	M.	Supported controllers
		SAS/ SATA	Any Bay	NVMe	3.5" SAS	2.5" SAS	2.5" NVMe	3.5" SAS	2.5" SAS	2.5" NVMe	2.5" Any				
25-1	1 or 2	24	0	0	0	8	0	0	8	0	0	**Front**: 3x 8x2.5" SAS/SATA (B8LU); **Mid**: 2x 4x2.5" SAS/SATA (BCQL); **Rear**: 8x2.5" SAS/SATA (B97X)			(9350-16i or 4350-16i) + Exp-44i
25-2	1 or 2														(940-16i or 540-16i or 440-16i) + Exp-44i
25-3	1 or 2														(9350-16i CFF or 940-16i CFF or 440-16i CFF) + Exp-44i
25-3-1	1 or 2														(9350-16i CFF or 940-16i CFF or 440-16i CFF) + Exp-44i
25A-1	1 or 2	24	0	0	0	4	0	0	0	0	0	**Front**: 3x 8x2.5" SAS/SATA (B8LU); **Mid**: 4x2.5" SAS/SATA (BCQL)			940-32i
25A-2	1 or 2														2x (9350-16i or 4350-16i)
25A-3	1 or 2														2x (940-16i or 540-16i or 440-16i)
25B-1	1 or 2	24	0	0	0	8	0	0	0	0	0	**Front**: 3x 8x2.5" SAS/SATA (B8LU); **Mid**: 2x 4x2.5" SAS/SATA (BCQL)			940-32i
25B-2	1 or 2														2x (9350-16i or 4350-16i)
25B-3	1 or 2														2x (940-16i or 540-16i or 440-16i)
25C-1	1 or 2	24	0	0	0	8	0	0	4	0	0	**Front**: 3x 8x2.5" SAS/SATA (B8LU); **Mid**: 2x 4x2.5" SAS/SATA (BCQL); **Rear**: 4x2.5" SAS/SATA (B8LV)			**Front**: 940-32i; **Mid**: (940-8i or 540-8i or 440-8i)
25C-2	1 or 2														(5350-8i or 9350-8i or 4350-8i) + Exp-44i
25C-3	1 or 2														(940-8i or 540-8i or 440-8i) + Exp-44i
25C-4	1 or 2														(9350-16i or 4350-16i) + Exp-44i
25C-5	1 or 2														(940-16i or 540-16i or 440-16i) + Exp-44i
25C-6	1 or 2														(9350-16i CFF or 940-16i CFF or 440-16i CFF) + Exp-44i

Config	CPUs	Front			Mid			Rear				Backplanes	7m	M.	Supported controllers
		SAS/ SATA	Any Bay	NVMe	3.5" SAS	2.5" SAS	2.5" NVMe	3.5" SAS	2.5" SAS	2.5" NVMe	2.5" Any				
25C-6-1	1 or 2														(9350-16i CFF or 940-16i CFF or 440-16i CFF) + Exp-44i
27-1	1 or 2	14	0	0	0	0	0	0	0	0	0	2x 8x2.5" SAS/SATA			**Front**: OB SATA; **Mid**: 2x 8x2.5" SAS/SATA
29A-1	2 only	0	16	0	0	0	0	0	0	0	0	2x 8xAnyBay (BH8B)			(9350-16i or 4350-16i) + OB NVMe
29A-2	2 only														(940-16i or 540-16i or 440-16i) + OB NVMe
29B-1	2 only	0	16	0	0	0	0	0	0	0	0	2x 8xAnyBay (BH8B)			(9350-16i or 4350-16i) + OB NVMe
29B-2	2 only														(940-16i or 540-16i or 440-16i) + OB NVMe
41-1	1 or 2	0	8	0	0	0	0	0	0	0	0	1x 8x2.5" AnyBay (BH8B)			940-8i Tri-mode
47-1	1 or 2	24	0	0	0	0	0	0	0	0	0	24x2.5" SAS/SATA with Expander (BQ2T)			(5350-8i or 9350-8i or 4350-8i)
47-2	1 or 2														(940-8i or 540-8i or 440-8i)
48-1	1 or 2	24	0	0	0	0	0	0	4	0	0	**Front**: 24x2.5" SAS/SATA with Expander (BQ2T); **Rear**: 4x2.5" SAS/SATA (B8LV)			(5350-8i or 9350-8i or 4350-8i)
48-2	1 or 2														(940-8i or 540-8i or 440-8i)
49-1	1 or 2	24	0	0	0	0	0	0	0	0	4	**Front**: 24x2.5" SAS/SATA with Expander (BQ2T); **Rear**: 4x 2.5" AnyBay (BSE3)			**Front**: (5350-8i or 9350-8i or 4350-8i) + OB NVMe; **Rear**: OB NVMe
49-2	1 or 2														**Front**: (940-8i or 540-8i or 440-8i) + OB NVMe; **Rear**: OB NVMe

Config	CPUs	Front			Mid			Rear				Backplanes	7m	M.2	Supported controllers
		SAS/ SATA	Any Bay	NVMe	3.5" SAS	2.5" SAS	2.5" NVMe	3.5" SAS	2.5" SAS	2.5" NVMe	2.5" Any				
50-1	1 or 2	24	0	0	0	0	0	0	8	0	0	**Front**: 24x2.5" SAS/SATA with Expander (BQ2T); **Rear**: 8x2.5" SAS/SATA (B97X)			(9350-16i CFF or 940-16i CFF or 440-16i CFF)
50-2	1 or 2														(9350-16i or 4350-16i)
50-3	1 or 2														(940-16i or 540-16i or 440-16i)
51-1	2 only	0	0	24	0	0	0	0	0	0	4	**Front**: 3x 8xNVMe (BH8D); **Rear**: 4x 2.5" AnyBay (BSE3)			**Front**: Retimer + OB NVMe; **Rear**: Retimer + (5350-8i or 9350-8i or 4350-8i)
51-2	2 only														**Front**: Retimer + OB NVMe; **Rear**: Retimer + (940-8i or 540-8i or 440-8i)
55-1	1 or 2	24	0	0	0	0	0	0	0	0	4	**Front**: 3x 8x2.5" SAS/SATA (B8LU); **Rear**: 4x 2.5" AnyBay (BSE3)			940-32i + OB NVMe
55-2	1 or 2														(5350-8i or 9350-8i or 4350-8i) + OB NVMe + Exp-44i
55-3	1 or 2														(940-8i or 540-8i or 440-8i) + OB NVMe + Exp-44i
55-4	1 or 2														(9350-16i or 4350-16i) + OB NVMe + Exp-44i
55-5	1 or 2														(940-16i or 540-16i or 440-16i) + OB NVMe + Exp-44i
55-6	1 or 2														(9350-16i CFF or 940-16i CFF or 440-16i CFF) + OB NVMe + Exp-44i
55-6-1	1 only														(9350-16i CFF or 940-16i CFF or 440-16i CFF) + OB NVMe + Exp-44i

Config	CPUs	Front			Mid			Rear				Backplanes	7m	M.2	Supported controllers
		SAS/ SATA	Any Bay	NVMe	3.5" SAS	2.5" SAS	2.5" NVMe	3.5" SAS	2.5" SAS	2.5" NVMe	2.5" Any				
60-1	1 or 2	0	8	0	0	0	0	0	0	0	0	1x 8x2.5" AnyBay Gen5 (BLL2)			(5350-8i or 9350-8i or 4350-8i) + OB NVMe
60-2	1 or 2														(940-8i or 540-8i or 440-8i) + OB NVMe
60-3	1 or 2														(9350-16i or 4350-16i) + OB NVMe
60-4	1 or 2														(940-16i or 540-16i or 440-16i) + OB NVMe
60-5	1 or 2														(9350-8i CFF or 940-16i CFF or 440-16i CFF) + OB NVMe
60-6	1 or 2														(5350-8i or 9350-8i or 4350-8i) + OB NVMe
60-7	1 or 2														(940-8i or 540-8i or 440-8i) + OB NVMe
60-8	1 or 2														(9350-16i or 4350-16i) + OB NVMe
60-9	1 or 2														(940-16i or 540-16i or 440-16i) + OB NVMe
61-1	1 or 2	0	0	8	0	0	0	0	0	0	0	1x 8x2.5" NVMe Gen5 (BS7Y)			OB NVMe
61-2	1 or 2														OB NVMe
62-1	2 only	0	8	8	0	0	0	0	0	0	0	1x 8x2.5" AnyBay Gen5 (BLL2) + 1x 8x2.5" NVMe Gen5 (BS7Y)			(5350-8i or 9350-8i or 4350-8i) + OB NVMe
62-2	2 only														(940-8i or 540-8i or 440-8i) + OB NVMe
62-3	2 only														(9350-16i CFF or 940-16i CFF or 440-16i CFF) + OB NVMe
63-1	2 only	0	0	16	0	0	0	0	0	0	0	2x 8x2.5" NVMe Gen5 (BS7Y)			OB NVMe

Config	CPUs	Front			Mid			Rear				Backplanes	7m	M.	Supported controllers
		SAS/ SATA	Any Bay	NVMe	3.5" SAS	2.5" SAS	2.5" NVMe	3.5" SAS	2.5" SAS	2.5" NVMe	2.5" Any				
64-1	1 or 2	8	8	0	0	0	0	0	0	0	0	1x 8x2.5" SAS/SATA (B8LU) + 1x 8x2.5" AnyBay Gen5 (BLL2)			(9350-16i or 4350-16i) + OB NVMe + 1x Retimer
64-2	1 or 2														(940-16i or 540-16i or 440-16i) + OB NVMe + 1x Retimer
64-3	1 or 2														(2x 5350-8i or 2x 9350-8i or 2x 4350-8i) + OB NVMe + 1x Retimer
64-4	1 or 2														2x (940-8i or 540-8i or 440-8i) + OB NVMe + 1x Retimer
64-5	1 or 2														(9350-16i CFF or 940-16i CFF or 440-16i CFF) + OB NVMe + 1x Retimer
64-6	1 or 2														(9350-16i or 4350-16i) + OB NVMe + 1x Retimer
64-7	1 or 2														(940-16i or 540-16i or 440-16i) + OB NVMe + 1x Retimer
64-8	1 or 2														(2x 5350-8i or 2x 9350-8i or 2x 4350-8i) + OB NVMe + 1x Retimer
64-9	1 or 2														2x (940-8i or 540-8i or 440-8i) + OB NVMe + 1x Retimer
65-1	1 or 2	8	0	8	0	0	0	0	0	0	0	1x 8x2.5" SAS/SATA (B8LU) + 1x 8x2.5" NVMe Gen5 (BS7Y)			OB SATA + OB NVMe
65-2	1 or 2														(5350-8i or 9350-8i or 4350-8i) + OB NVMe
65-3	1 or 2														(940-8i or 540-8i or 440-8i) + OB NVMe

Config	CPUs	Front			Mid			Rear				Backplanes	7m	M.	Supported controllers
		SAS/ SATA	Any Bay	NVMe	3.5" SAS	2.5" SAS	2.5" NVMe	3.5" SAS	2.5" SAS	2.5" NVMe	2.5" Any				
65-4	1 or 2														(9350-16i CFF or 940-16i CFF or 440-16i CFF) + OB NVMe
65-5	1 or 2														OB SATA + OB NVMe
65-6	1 or 2														(5350-8i or 9350-8i or 4350-8i) + OB NVMe
65-7	1 or 2														(940-8i or 540-8i or 440-8i) + OB NVMe
67-1	1 or 2	16	8	0	0	0	0	0	0	0	0	2x 8x2.5" SAS/SATA (B8LU) + 1x 8x2.5" AnyBay Gen5 (BLL2)			940-32i + OB NVMe
67-2	1 or 2														(5350-8i or 9350-8i or 4350-8i) + OB NVMe + Exp-44i
67-3	1 or 2														(940-8i or 540-8i or 440-8i) + OB NVMe + Exp-44i
67-4	1 or 2														(9350-16i CFF or 940-16i CFF or 440-16i CFF) + OB NVMe + Exp-44i
67-5	1 or 2														3x (940-8i or 540-8i or 440-8i) + OB NVMe
67-6	1 or 2														940-32i + OB NVMe
67-7	1 or 2														(5350-8i or 9350-8i or 4350-8i) + OB NVMe + Exp-44i
67-8	1 or 2														(940-8i or 540-8i or 440-8i) + OB NVMe + Exp-44i
68-1	1 or 2	16	0	8	0	0	0	0	0	0	0	2x 8x2.5" SAS/SATA (B8LU) + 1x 8x2.5" NVMe Gen5 (BS7Y)			(5350-8i or 9350-8i or 4350-8i) + OB NVMe

Config	CPUs	Front			Mid			Rear				Backplanes	7m	M.2	Supported controllers
		SAS/ SATA	Any Bay	NVMe	3.5" SAS	2.5" SAS	2.5" NVMe	3.5" SAS	2.5" SAS	2.5" NVMe	2.5" Any				
68-2	1 or 2														(940-8i or 540-8i or 440-8i) + OB NVMe
68-3	1 or 2														(5350-8i or 9350-8i or 4350-8i) + OB NVMe + Exp-44i
68-4	1 or 2														(940-8i or 540-8i or 440-8i) + OB NVMe + Exp-44i
68-5	1 or 2														(5350-8i or 9350-8i or 4350-8i) + OB NVMe + Exp-44i
68-6	1 or 2														(940-8i or 540-8i or 440-8i) + OB NVMe + Exp-44i
69-1	2 only	8	0	16	0	0	0	0	0	0	0	1x 8x2.5" SAS/SATA (B8LU) + 2x 8x2.5" NVMe Gen5 (BS7Y)			(5350-8i or 9350-8i or 4350-8i) + OB NVMe
69-2	2 only														(940-8i or 540-8i or 440-8i) + OB NVMe
70-1	2 only	0	0	24	0	0	0	0	0	0	0	3x 8x2.5" NVMe Gen5 (BS7Y)			OB NVMe + Retimer
71-1	2 only	0	8	16	0	0	0	0	0	0	0	1x 8x2.5" AnyBay Gen5 (BLL2) + 2x 8x2.5" NVMe Gen5 (BS7Y)			(5350-8i or 9350-8i or 4350-8i) + OB NVMe + 1x Retimer
71-2	2 only														(940-8i or 540-8i or 440-8i) + OB NVMe + 1x Retimer
72-1	1 or 2	16	8	0	0	0	0	0	4	0	0	**Front**: 2x 8x2.5" SAS/SATA (B8LU) + 1x 8x2.5" AnyBay Gen5 (BLL2); **Rear**: 4x2.5" SAS/SATA (B8LV)			940-32i + OB NVMe
72-2	1 or 2														(5350-8i or 9350-8i or 4350-8i) + OB NVMe + Exp-44i
72-3	1 or 2														(940-8i or 540-8i or 440-8i) + OB NVMe + Exp-44i

Config	CPUs	Front			Mid			Rear				Backplanes	7m	M.2	Supported controllers
		SAS/ SATA	Any Bay	NVMe	3.5" SAS	2.5" SAS	2.5" NVMe	3.5" SAS	2.5" SAS	2.5" NVMe	2.5" Any				
72-4	1 or 2														(9350-16i CFF or 940-16i CFF or 440-16i CFF) + OB NVMe + Exp-44i
72-5	1 or 2														4x (5350-8i or 9350-8i or 4350-8i) + OB NVMe
72-6	1 or 2														4x (940-8i or 540-8i or 440-8i) + OB NVMe
72-7	1 or 2														940-32i + OB NVMe
72-8	1 or 2														(5350-8i or 9350-8i or 4350-8i) + OB NVMe + Exp-44i
72-9	1 or 2														(940-8i or 540-8i or 440-8i) + OB NVMe + Exp-44i
73-1	2 only	0	0	24	0	0	8	0	0	0	0	**Front**: 3x 8x2.5" NVMe Gen5 (BS7Y); **Mid**: 2x 4x2.5" NVMe (BDY7)			**Front**: OB NVMe + Retimer; **Mid**: Retimer
75A-1	2 only	0	16	0	0	0	0	0	0	0	0	2x 8x2.5" AnyBay Gen5 (BLL2)			(9350-16i or 4350-16i) + OB NVMe
75A-2	2 only														(940-16i or 540-16i or 440-16i) + OB NVMe
75B-1	2 only	0	16	0	0	0	0	0	0	0	0	2x 8x2.5" AnyBay Gen5 (BLL2)			(9350-16i or 4350-16i) + OB NVMe
75B-2	2 only														(940-16i or 540-16i or 440-16i) + OB NVMe
82A-1	1 or 2	0	8	0	0	0	0	0	0	0	0	1x 8x2.5" AnyBay Gen5 (BLL2)			(5350-8i or 9350-8i or 4350-8i) + OB NVMe
82A-2	1 or 2														(940-8i or 540-8i or 440-8i) + OB NVMe

Config	CPUs	Front			Mid			Rear				Backplanes	7m	M.2	Supported controllers
		SAS/ SATA	Any Bay	NVMe	3.5" SAS	2.5" SAS	2.5" NVMe	3.5" SAS	2.5" SAS	2.5" NVMe	2.5" Any				
82A-3	1 or 2														(9350-16i or 4350-16i) + OB NVMe
82A-4	1 or 2														(940-16i or 540-16i or 440-16i) + OB NVMe
8A2-5	1 or 2														(5350-8i CFF or 9350-8i CFF or 440-8i CFF) + OB NVMe
82A-5	1 or 2														(5350-8i or 9350-8i or 4350-8i) + OB NVMe
8A2-6	1 or 2														(940-8i or 540-8i or 440-8i) + OB NVMe
82A-6	1 or 2														(9350-16i or 4350-16i) + OB NVMe
8A2-7	1 or 2														(940-16i or 540-16i or 440-16i) + OB NVMe
82B-1	2 only	0	8	0	0	0	0	0	0	0	0	1x 8x2.5" AnyBay Gen5 (BLL2)			(5350-8i or 9350-8i or 4350-8i) + OB NVMe
82B-2	2 only														(940-8i or 540-8i or 440-8i) + OB NVMe
82B-3	2 only														(9350-16i or 4350-16i) + OB NVMe
82B-4	2 only														(940-16i or 540-16i or 440-16i) + OB NVMe
82B-5	2 only														(5350-8i CFF or 9350-8i CFF or 440-8i CFF) + OB NVMe
83A-1	1 or 2	0	0	8	0	0	0	0	0	0	0	1x 8x2.5" NVMe Gen5 (BS7Y)			OB NVMe
83A-1	1 or 2														OB NVMe
83B-2	2 only	0	0	8	0	0	0	0	0	0	0	1x 8x2.5" NVMe Gen5 (BS7Y)			OB NVMe

Config	CPUs	Front			Mid			Rear				Backplanes	7m	M.	Supported controllers
		SAS/ SATA	Any Bay	NVMe	3.5" SAS	2.5" SAS	2.5" NVMe	3.5" SAS	2.5" SAS	2.5" NVMe	2.5" Any				
84A-1	1 or 2	8	8	0	0	0	0	0	0	0	0	1x 8x2.5" SAS/SATA (B8LU) + 1x 8x2.5" AnyBay Gen5 (BLL2)			(9350-16i or 4350-16i) + OB NVMe
84A-2	1 or 2														(940-16i or 540-16i or 440-16i) + OB NVMe
84A-3	1 or 2														(2x 5350-8i or 2x 9350-8i or 2x 4350-8i) + OB NVMe
84A-4	1 or 2														2x (940-8i or 540-8i or 440-8i) + OB NVMe
84A-5	1 or 2														(9350-16i CFF or 940-16i CFF or 440-16i CFF) + OB NVMe
84A-6	1 or 2														(9350-16i or 4350-16i) + OB NVMe + 1x Retimer
84A-7	1 or 2														(940-16i or 540-16i or 440-16i) + OB NVMe + 1x Retimer
84A-8	1 or 2														(2x 5350-8i or 2x 9350-8i or 2x 4350-8i) + OB NVMe + 1x Retimer
84A-9	1 or 2														2x (940-8i or 540-8i or 440-8i) + OB NVMe + 1x Retimer
84B-1	2 only	8	8	0	0	0	0	0	0	0	0				(9350-16i or 4350-16i) + OB NVMe + 1x Retimer
84B-2	2 only														(940-16i or 540-16i or 440-16i) + OB NVMe + 1x Retimer
84B-3	2 only														(2x 5350-8i or 2x 9350-8i or 2x 4350-8i) + OB NVMe + 1x Retimer

Config	CPUs	Front			Mid			Rear				Backplanes	7m	M.2	Supported controllers
		SAS/ SATA	Any Bay	NVMe	3.5" SAS	2.5" SAS	2.5" NVMe	3.5" SAS	2.5" SAS	2.5" NVMe	2.5" Any				
84B-4	2 only														2x (940-8i or 540-8i or 440-8i) + OB NVMe + 1x Retimer
84B-5	2 only														(9350-16i CFF or 940-16i CFF or 440-16i CFF) + OB NVMe + 1x Retimer
85A-1	1 or 2	8	0	8	0	0	0	0	0	0	0	1x 8x2.5" SAS/SATA (B8LU) + 1x 8x2.5" NVMe Gen5 (BS7Y)			OB SATA + OB NVMe
85A-2	1 or 2														(5350-8i or 9350-8i or 4350-8i) + OB NVMe
85A-3	1 or 2														(940-8i or 540-8i or 440-8i) + OB NVMe
85A-4	1 or 2														(9350-16i CFF or 940-16i CFF or 440-16i CFF) + OB NVMe
85A-5	1 or 2														OB SATA + OB NVMe
85A-6	1 or 2														(5350-8i or 9350-8i or 4350-8i) + OB NVMe
85A-7	1 or 2														(940-8i or 540-8i or 440-8i) + OB NVMe
85B-1	2 only	8	0	8	0	0	0	0	0	0	0	1x 8x2.5" SAS/SATA (B8LU) + 1x 8x2.5" NVMe Gen5 (BS7Y)			OB SATA + OB NVMe
85B-2	2 only														(5350-8i or 9350-8i or 4350-8i) + OB NVMe
85B-3	2 only														(940-8i or 540-8i or 440-8i) + OB NVMe
85B-4	2 only														(9350-16i CFF or 940-16i CFF or 440-16i CFF) + OB NVMe

Config	CPUs	Front			Mid			Rear				Backplanes	7m	M.2	Supported controllers
		SAS/ SATA	Any Bay	NVMe	3.5" SAS	2.5" SAS	2.5" NVMe	3.5" SAS	2.5" SAS	2.5" NVMe	2.5" Any				
86A-1	1 or 2	16	8	0	0	0	0	0	0	0	0	2x 8x2.5" SAS/SATA (B8LU) + 1x 8x2.5" AnyBay Gen5 (BLL2)			940-32i + OB NVMe
86A-2	1 or 2														(5350-8i or 9350-8i or 4350-8i) + OB NVMe + Exp-44i
86A-3	1 or 2														(940-8i or 540-8i or 440-8i) + OB NVMe + Exp-44i
86A-4	1 or 2														(9350-16i CFF or 940-16i CFF or 440-16i CFF) + OB NVMe + Exp-44i
86A-5	1 or 2														3x (940-8i or 540-8i or 440-8i) + OB NVMe
86A-6	1 or 2														940-32i + OB NVMe
86A-7	1 or 2														(5350-8i or 9350-8i or 4350-8i) + OB NVMe + Exp-44i
86A-8	1 or 2														(940-8i or 540-8i or 440-8i) + OB NVMe + Exp-44i
86B-1	2 only	16	8	0	0	0	0	0	0	0	0	2x 8x2.5" SAS/SATA (B8LU) + 1x 8x2.5" AnyBay Gen5 (BLL2)			940-32i + OB NVMe
86B-2	2 only														(5350-8i or 9350-8i or 4350-8i) + OB NVMe + Exp-44i
86B-3	2 only														(940-8i or 540-8i or 440-8i) + OB NVMe + Exp-44i
86B-4	2 only														(9350-16i CFF or 940-16i CFF or 440-16i CFF) + OB NVMe + Exp-44i
86B-5	2 only														3x (940-8i or 540-8i or 440-8i) + OB NVMe

Config	CPUs	Front			Mid			Rear				Backplanes	7m	M.2	Supported controllers
		SAS/ SATA	Any Bay	NVMe	3.5" SAS	2.5" SAS	2.5" NVMe	3.5" SAS	2.5" SAS	2.5" NVMe	2.5" Any				
87A-1	1 or 2	16	0	8	0	0	0	0	0	0	0	2x 8x2.5" SAS/SATA (B8LU) + 1x 8x2.5" NVMe Gen5 (BS7Y)			(9350-16i or 4350-16i) + OB NVMe
87A-2	1 or 2														(940-16i or 540-16i or 440-16i) + OB NVMe
87A-3	1 or 2														(5350-8i or 9350-8i or 4350-8i) + OB NVMe + Exp-44i
87A-4	1 or 2														(940-8i or 540-8i or 440-8i) + OB NVMe + Exp-44i
87A-5	1 or 2														(5350-8i or 9350-8i or 4350-8i) + OB NVMe + Exp-44i
87A-6	1 or 2														(940-8i or 540-8i or 440-8i) + OB NVMe + Exp-44i
87B-1	2 only	16	0	8	0	0	0	0	0	0	0	2x 8x2.5" SAS/SATA (B8LU) + 1x 8x2.5" NVMe Gen5 (BS7Y)			(9350-16i or 4350-16i) + OB NVMe
87B-2	2 only														(940-16i or 540-16i or 440-16i) + OB NVMe
87B-3	2 only														(5350-8i or 9350-8i or 4350-8i) + OB NVMe + Exp-44i
87B-4	2 only														(940-8i or 540-8i or 440-8i) + OB NVMe + Exp-44i
88	2 only	0	0	12	0	0	0	0	0	0	0	2x 8xNVMe (BH8D)			OB NVMe
89A-1	2 only	0	0	16	0	0	0	0	0	0	0	2x 8x2.5" NVMe Gen5 (BS7Y)			OB NVMe
89B-1	2 only	0	0	16	0	0	0	0	0	0	0	2x 8x2.5" NVMe Gen5 (BS7Y)			OB NVMe
89C-1	2 only	0	0	16	0	0	0	0	0	0	0	2x 8x2.5" NVMe Gen5 (BS7Y)			OB NVMe + 1x Retimer

Config	CPUs	Front			Mid			Rear				Backplanes	7m	M.	Supported controllers
		SAS/ SATA	Any Bay	NVMe	3.5" SAS	2.5" SAS	2.5" NVMe	3.5" SAS	2.5" SAS	2.5" NVMe	2.5" Any				
90A-1	2 only	0	8	8	0	0	0	0	0	0	0	1x 8x2.5" AnyBay Gen5 (BLL2) + 1x 8x2.5" NVMe Gen5 (BS7Y)			(5350-8i or 9350-8i or 4350-8i) + OB NVMe + 1x Retimer
90A-2	2 only														(940-8i or 540-8i or 440-8i) + OB NVMe + 1x Retimer
90A-3	2 only														(5350-8i CFF or 9350-8i CFF or 440-8i CFF) + OB NVMe + 1x Retimer
90B-1	2 only	0	8	8	0	0	0	0	0	0	0	1x 8x2.5" AnyBay Gen5 (BLL2) + 1x 8x2.5" NVMe Gen5 (BS7Y)			(5350-8i or 9350-8i or 4350-8i) + OB NVMe
90B-2	2 only														(940-8i or 540-8i or 440-8i) + OB NVMe
91-1	2 only	0	8	8	0	0	0	0	0	0	0	1x 8x2.5" AnyBay Gen5 (BLL2) + 1x 8x2.5" NVMe Gen5 (BS7Y)			(5350-8i or 9350-8i or 4350-8i) + OB NVMe + 1x Retimer
91-2	2 only														(940-8i or 540-8i or 440-8i) + OB NVMe + 1x Retimer
91A-1	2 only	8	0	16	0	0	0	0	0	0	0	1x 8x2.5" SAS/SATA (B8LU) + 2x 8x2.5" NVMe Gen5 (BS7Y)			(5350-8i or 9350-8i or 4350-8i) + OB NVMe
91A-2	2 only														(940-8i or 540-8i or 440-8i) + OB NVMe
91B-1	2 only	8	0	16	0	0	0	0	0	0	0	1x 8x2.5" SAS/SATA (B8LU) + 2x 8x2.5" NVMe Gen5 (BS7Y)			(5350-8i or 9350-8i or 4350-8i) + OB NVMe + 1x Retimer
91B-2	2 only														(940-8i or 540-8i or 440-8i) + OB NVMe + 1x Retimer
92-1	2 only	4	12	0	0	0	0	0	0	0	0	2x 8x2.5" AnyBay Gen5 (BLL2)			(9350-16i or 4350-16i) + OB NVMe

Config	CPUs	Front			Mid			Rear				Backplanes	7m	M.	Supported controllers
		SAS/ SATA	Any Bay	NVMe	3.5" SAS	2.5" SAS	2.5" NVMe	3.5" SAS	2.5" SAS	2.5" NVMe	2.5" Any				
92-2	2 only														(940-16i or 540-16i or 440-16i) + OB NVMe
93A-1	2 only	0	16	0	0	0	0	0	0	0	0	2x 8x2.5" AnyBay Gen5 (BLL2)			(9350-16i or 4350-16i) + OB NVMe
93A-2	2 only														(940-16i or 540-16i or 440-16i) + OB NVMe
93B-1	2 only	0	16	0	0	0	0	0	0	0	0	2x 8x2.5" AnyBay Gen5 (BLL2)			(9350-16i or 4350-16i) + OB NVMe
93B-2	2 only														(940-16i or 540-16i or 440-16i) + OB NVMe
93C-1	2 only	0	16	0	0	0	0	0	0	0	0	2x 8x2.5" AnyBay Gen5 (BLL2)			(9350-16i or 4350-16i) + OB NVMe + 1x Retimer
93C-2	2 only														(940-16i or 540-16i or 440-16i) + OB NVMe + 1x Retimer
93D-1	2 only	0	16	0	0	0	0	0	0	0	0	2x 8x2.5" AnyBay Gen5 (BLL2)			(9350-16i or 4350-16i) + OB NVMe + 1x Retimer
93D-2	2 only														(940-16i or 540-16i or 440-16i) + OB NVMe + 1x Retimer
94A-1	2 only	0	0	24	0	0	0	0	0	0	0	3x 8x2.5" NVMe Gen5 (BS7Y)			OB NVMe + 1x Retimer
94B-1	2 only	0	0	24	0	0	0	0	0	0	0	3x 8x2.5" NVMe Gen5 (BS7Y)			OB NVMe + 2x Retimer
95A-1	2 only	0	8	16	0	0	0	0	0	0	0	1x 8x2.5" AnyBay Gen5 (BLL2) + 2x 8x2.5" NVMe Gen5 (BS7Y)			(5350-8i or 9350-8i or 4350-8i) + OB NVMe + 1x Retimer
95A-2	2 only														(940-8i or 540-8i or 440-8i) + OB NVMe + 1x Retimer

Config	CPUs	Front			Mid			Rear				Backplanes	7m	M.2	Supported controllers
		SAS/ SATA	Any Bay	NVMe	3.5" SAS	2.5" SAS	2.5" NVMe	3.5" SAS	2.5" SAS	2.5" NVMe	2.5" Any				
95B-1	2 only	0	8	16	0	0	0	0	0	0	0	1x 8x2.5" AnyBay Gen5 (BLL2) + 2x 8x2.5" NVMe Gen5 (BS7Y)			(5350-8i or 9350-8i or 4350-8i) + OB NVMe + 2x Retimer
95B-2	2 only														(940-8i or 540-8i or 440-8i) + OB NVMe + 2x Retimer
96-1	2 only	16	8	0	0	0	0	0	4	0	0	**Front**: 2x 8x2.5" SAS/SATA (B8LU) + 1x 8x2.5" AnyBay Gen5 (BLL2); **Rear**: 4x2.5" SAS/SATA (B8LV)			940-32i + OB NVMe
96-2	2 only														(5350-8i or 9350-8i or 4350-8i) + OB NVMe + Exp-44i
96-3	2 only														(940-8i or 540-8i or 440-8i) + OB NVMe + Exp-44i
96-4	2 only														(5350-8i CFF or 9350-8i CFF or 440-8i CFF) + OB NVMe + Exp-44i
96-5	2 only														4x (5350-8i or 9350-8i or 4350-8i) + OB NVMe
96-6	2 only														4x (940-8i or 540-8i or 440-8i) + OB NVMe
97-1	2 only	0	0	24	0	0	8	0	0	0	0	**Front**: 3x 8x2.5" NVMe Gen5 (BS7Y); **Mid**: 2x 4x2.5" NVMe (BDY7)			OB NVMe + 4x Retimer
98-1	2 only	0	0	24	0	0	0	0	0	0	4	**Front**: 3x 8x2.5" NVMe Gen5 (BS7Y); **Rear**: 4x 2.5" AnyBay (BSE3)			OB NVMe + 3x Retimer

Field upgrades

The SR650 V3 is orderable without drive bays, allowing you to add a backplane, cabling and controllers as field upgrades. The server also supports upgrading some configurations by adding additional front drive bays (for example, upgrading from 8 to 16x 2.5-inch drive bays).

Upgrade path: The key criteria for upgrade support is to ensure that the target configuration is one of the supported drive bay configurations as listed in the Supported drive bay combinations section.

For example, if you are upgrading a 2.5-inch SAS/SATA drive configuration from 8 bays (Config 9) to 16 bays (Config 12), you will need these additional options:

- 4XH7A60930, ThinkSystem V2/V3 2U 8x2.5" SAS/SATA Backplane Option Kit
- 4X97A82935, ThinkSystem SR650 V3 2.5" Chassis Front BP2 SAS/SATA Cable Kit

To add drive bays you will need to order both drive backplanes and cable kits. Backplane kits do not include cables.

Topics in this section:

- 3.5-inch chassis drive bay upgrades
- 2.5-inch chassis drive bay upgrades
- Upgrading to an internal adapter

3.5-inch chassis drive bay upgrades

The table below lists the backplane kits and cable kits needed to build one of the supported 3.5-inch chassis configurations.

For more information about the backplane kits and cable kits, see the Lenovo server options site: https://serveroption.lenovo.com/cable_kit_options/

Table 19. Drive bay field upgrade for the 3.5-inch chassis (Blue = SAS/SATA, Purple = AnyBay, Red = NVMe)

Config	3.5" front bays			Mid bays			Rear bays				Backplane and cable kits required (all required)
	SAS/ SATA	Any Bay	NVMe	3.5" SAS	2.5" SAS	2.5" NVMe	3.5" SAS	2.5" SAS	2.5" NVMe	2.5" Any	
1	8	0	0	0	0	0	0	0	0	0	• **4XH7A60932**, ThinkSystem SR650 V2/SR665 8x3.5" SAS/SATA Backplane Option Kit • **4X97A87506**, ThinkSystem SR650 V2 SAS/SATA Cable from MB to Front 3.5" BP SATA0/1
2	12	0	0	0	0	0	0	0	0	0	• **4XH7A60929**, ThinkSystem V2/V3 2U 12x3.5" SAS/SATA Backplane Option Kit • **4X97A82928**, ThinkSystem SR650 V3 3.5" Chassis Front Backplane SAS/SATA Cable Kit
3	12	0	0	0	0	0	2	0	0	0	• **4XH7A60929**, ThinkSystem V2/V3 2U 12x3.5" SAS/SATA Backplane Option Kit • **4XH7A60940**, ThinkSystem SR650 V2/SR665 Rear 2x3.5" SAS/SATA Backplane Option Kit • **4X97A82928**, ThinkSystem SR650 V3 3.5" Chassis Front Backplane SAS/SATA Cable Kit • **4X97A82930**, ThinkSystem SR650 V3 3.5" Chassis Rear Backplane SAS/SATA Cable Kit

Config	3.5" front bays			Mid bays			Rear bays				Backplane and cable kits required (all required)
	SAS/ SATA	Any Bay	NVMe	3.5" SAS	2.5" SAS	2.5" NVMe	3.5" SAS	2.5" SAS	2.5" NVMe	2.5" Any	
4	12	0	0	0	0	0	4	0	0	0	• **4XH7A60929**, ThinkSystem V2/V3 2U 12x3.5" SAS/SATA Backplane Option Kit • **4XH7A60939**, ThinkSystem SR650 V2/SR665 Rear 4x3.5" SAS/SATA Backplane Option Kit • **4X97A82928**, ThinkSystem SR650 V3 3.5" Chassis Front Backplane SAS/SATA Cable Kit • **4X97A82930**, ThinkSystem SR650 V3 3.5" Chassis Rear Backplane SAS/SATA Cable Kit
5	12	0	0	0	0	0	0	4	0	0	• **4XH7A60929**, ThinkSystem V2/V3 2U 12x3.5" SAS/SATA Backplane Option Kit • **4XH7A60938**, ThinkSystem V2/V3 2U Rear 4x2.5" SAS/SATA Backplane Option Kit • **4X97A82928**, ThinkSystem SR650 V3 3.5" Chassis Front Backplane SAS/SATA Cable Kit • **4X97A82938**, ThinkSystem SR650 V3 2.5" Chassis Rear Backplane SAS/SATA Cable Kit
6	12	0	0	4	0	0	4	0	0	0	• **4XH7A60929**, ThinkSystem V2/V3 2U 12x3.5" SAS/SATA Backplane Option Kit • **4XH7A82916**, ThinkSystem SR650 V3 Middle 4x3.5" SAS/SATA Backplane Option Kit • **4XH7A60939**, ThinkSystem SR650 V2/SR665 Rear 4x3.5" SAS/SATA Backplane Option Kit • **4X97A82928**, ThinkSystem SR650 V3 3.5" Chassis Front Backplane SAS/SATA Cable Kit • **4X97A82931**, ThinkSystem SR650 V3 3.5" Chassis Middle Backplane SAS/SATA Cable Kit • **4X97A82930**, ThinkSystem SR650 V3 3.5" Chassis Rear Backplane SAS/SATA Cable Kit
6A	12	0	0	4	0	0	0	0	0	0	• **4XH7A60929**, ThinkSystem V2/V3 2U 12x3.5" SAS/SATA Backplane Option Kit • **4XH7A82916**, ThinkSystem SR650 V3 Middle 4x3.5" SAS/SATA Backplane Option Kit • **4X97A82928**, ThinkSystem SR650 V3 3.5" Chassis Front Backplane SAS/SATA Cable Kit • **4X97A82939**, ThinkSystem SR650 V3 2.5" Chassis Middle Backplane SAS/SATA Cable Kit

Config	3.5" front bays			Mid bays			Rear bays				Backplane and cable kits required (all required)
	SAS/ SATA	Any Bay	NVMe	3.5" SAS	2.5" SAS	2.5" NVMe	3.5" SAS	2.5" SAS	2.5" NVMe	2.5" Any	
6B	12	0	0	0	4	0	0	0	0	0	• **4XH7A60929**, ThinkSystem V2/V3 2U 12x3.5" SAS/SATA Backplane Option Kit • **4XH7A87509**, ThinkSystem SR650 V3 Middle 4x2.5" SAS/SATA Backplane Option Kit • **4X97A82928**, ThinkSystem SR650 V3 3.5" Chassis Front Backplane SAS/SATA Cable Kit • **4X97A82939**, ThinkSystem SR650 V3 2.5" Chassis Middle Backplane SAS/SATA Cable Kit
7A	8	4	0	0	0	0	0	0	0	0	• **4XH7A87507**, 2U 8x3.5" SAS/SATA+4 AnyBay BP • **4X97A82928**, ThinkSystem SR650 V3 3.5" Chassis Front Backplane SAS/SATA Cable Kit • **4X97A87504**, ThinkSystem SR650 V3 4x3.5" Chassis Front Backplane NVMe Cable Kit
7B	8	0	4	0	0	0	0	0	0	0	• **4XH7A87508**, ThinkSystem SR650 V3 8x3.5" SAS/SATA + 4x NVMe Backplane Option Kit • **4X97A82928**, ThinkSystem SR650 V3 3.5" Chassis Front Backplane SAS/SATA Cable Kit • **4X97A87504**, ThinkSystem SR650 V3 4x3.5" Chassis Front Backplane NVMe Cable Kit
8A	8	4	0	0	0	0	4	0	0	0	• **4XH7A87507**, 2U 8x3.5" SAS/SATA+4 AnyBay BP • **4XH7A60939**, ThinkSystem SR650 V2/SR665 Rear 4x3.5" SAS/SATA Backplane Option Kit • **4X97A82928**, ThinkSystem SR650 V3 3.5" Chassis Front Backplane SAS/SATA Cable Kit • **4X97A87504**, ThinkSystem SR650 V3 4x3.5" Chassis Front Backplane NVMe Cable Kit • **4X97A59806**, ThinkSystem SR650 V2 3.5" Chassis Rear Backplane SAS/SATA Cable Kit
8B	8	0	4	0	0	0	4	0	0	0	• **4XH7A87508**, ThinkSystem SR650 V3 8x3.5" SAS/SATA + 4x NVMe Backplane Option Kit • **4XH7A60939**, ThinkSystem SR650 V2/SR665 Rear 4x3.5" SAS/SATA Backplane Option Kit • **4X97A82928**, ThinkSystem SR650 V3 3.5" Chassis Front Backplane SAS/SATA Cable Kit • **4X97A87504**, ThinkSystem SR650 V3 4x3.5" Chassis Front Backplane NVMe Cable Kit • **4X97A59806**, ThinkSystem SR650 V2 3.5" Chassis Rear Backplane SAS/SATA Cable Kit

Config	3.5" front bays			Mid bays			Rear bays				Backplane and cable kits required (all required)
	SAS/ SATA	Any Bay	NVMe	3.5" SAS	2.5" SAS	2.5" NVMe	3.5" SAS	2.5" SAS	2.5" NVMe	2.5" Any	
26	12	0	0	0	0	8	0	0	0	0	• **4XH7A60929**, ThinkSystem V2/V3 2U 12x3.5" SAS/SATA Backplane Option Kit • **4XH7A82915**, ThinkSystem SR650 V3 Middle 8x2.5" NVMe Backplane Option Kit • **4X97A59804**, ThinkSystem SR650 V2 3.5" Chassis Front Backplane SAS/SATA Cable Kit • **4X97A82940**, ThinkSystem SR650 V3 2.5" Chassis Middle Backplane NVMe Cable Kit
42	12-EXP	0	0	0	0	0	0	0	0	0	• **4XH7A86133**, ThinkSystem 2U V3 12x3.5" Expander Backplane Option Kit • **4X97A87505**, ThinkSystem SR650 V3 3.5"/2.5" Chassis Front Expander Backplane SAS/SATA Cable Kit
43	12-EXP	0	0	0	0	0	4	0	0	0	• **4XH7A86133**, ThinkSystem 2U V3 12x3.5" Expander Backplane Option Kit • **4XH7A60939**, ThinkSystem SR650 V2/SR665 Rear 4x3.5" SAS/SATA Backplane Option Kit • **4X97A87505**, ThinkSystem SR650 V3 3.5"/2.5" Chassis Front Expander Backplane SAS/SATA Cable Kit • **4X97A82930**, ThinkSystem SR650 V3 3.5" Chassis Rear Backplane SAS/SATA Cable Kit
44	12-EXP	0	0	0	0	0	0	0	0	4	• **4XH7A86133**, ThinkSystem 2U V3 12x3.5" Expander Backplane Option Kit • **4XH7A86661**, ThinkSystem 1U 4x2.5" AnyBay Backplane • **4X97A87505**, ThinkSystem SR650 V3 3.5"/2.5" Chassis Front Expander Backplane SAS/SATA Cable Kit • **4X97A82938**, ThinkSystem SR650 V3 2.5" Chassis Rear Backplane SAS/SATA Cable Kit • **4X97A87062**, ThinkSystem SR650 V3 2.5" Chassis Rear Backplane NVMe Cable Kit
45	12-EXP	0	0	0	0	0	2	0	0	0	• **4XH7A86133**, ThinkSystem 2U V3 12x3.5" Expander Backplane Option Kit • **4XH7A82918**, ThinkSystem V3 2U Rear 4x3.5" SAS/SATA Backplane Option Kit • **4X97A87505**, ThinkSystem SR650 V3 3.5"/2.5" Chassis Front Expander Backplane SAS/SATA Cable Kit • **4X97A82930**, ThinkSystem SR650 V3 3.5" Chassis Rear Backplane SAS/SATA Cable Kit

Config	3.5" front bays			Mid bays			Rear bays				Backplane and cable kits required (all required)
	SAS/ SATA	Any Bay	NVMe	3.5" SAS	2.5" SAS	2.5" NVMe	3.5" SAS	2.5" SAS	2.5" NVMe	2.5" Any	
46	12-EXP	0	0	4	0	0	4	0	0	0	• **4XH7A86133**, ThinkSystem 2U V3 12x3.5" Expander Backplane Option Kit • **4XH7A82916**, ThinkSystem SR650 V3 Middle 4x3.5" SAS/SATA Backplane Option Kit • **4XH7A60939**, ThinkSystem SR650 V2/SR665 Rear 4x3.5" SAS/SATA Backplane Option Kit • **4X97A87505**, ThinkSystem SR650 V3 3.5"/2.5" Chassis Front Expander Backplane SAS/SATA Cable Kit • **4X97A82931**, ThinkSystem SR650 V3 3.5" Chassis Middle Backplane SAS/SATA Cable Kit • **4X97A82930**, ThinkSystem SR650 V3 3.5" Chassis Rear Backplane SAS/SATA Cable Kit
54	12	0	0	0	0	0	0	0	0	4	• **4XH7A60929**, ThinkSystem V2/V3 2U 12x3.5" SAS/SATA Backplane Option Kit • **4XH7A86661**, ThinkSystem 1U 4x2.5" AnyBay Backplane • **4X97A82928**, ThinkSystem SR650 V3 3.5" Chassis Front Backplane SAS/SATA Cable Kit • **4X97A82938**, ThinkSystem SR650 V3 2.5" Chassis Rear Backplane SAS/SATA Cable Kit • **4X97A87062**, ThinkSystem SR650 V3 2.5" Chassis Rear Backplane NVMe Cable Kit

2.5-inch chassis drive bay upgrades

The table below lists the backplane kits and cable kits needed to build one of the supported 2.5-inch chassis configurations. The configurations each have a Config number that matches the configurations listed in the Storage configurations section.

Note: Front drive cable kits are based on the location of the backplane in the server. The three backplane locations are BP1, BP2 and BP3 as shown in the following figure.

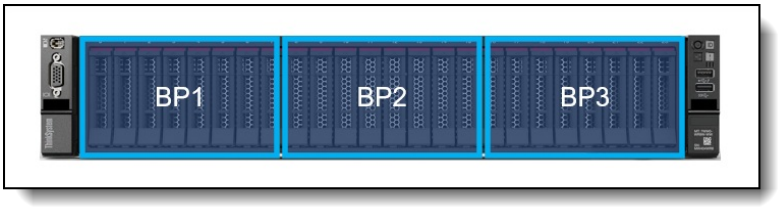

Figure 13. Backplane numbering

For more information about the backplane kits and cable kits, see the Lenovo server options site: https://serveroption.lenovo.com/cable_kit_options/

Table 20. Drive bay field upgrade for the 2.5-inch chassis (Blue = SAS/SATA, Purple = AnyBay, Red = NVMe)

Config	2.5" front bays				Mid bays			Rear bays				Backplane and cable kits required (all required)
	SAS/ SATA	Any Bay	NVMe	Tri-Mode	3.5" SAS	2.5" SAS	2.5" NVMe	3.5" SAS	2.5" SAS	2.5" NVMe	2.5" Any	
9	8	0	0	0	0	0	0	0	0	0	0	• **4XH7A60930**, ThinkSystem V2/V3 2U 8x2.5" SAS/SATA Backplane Option Kit • **4X97A82933**, ThinkSystem SR650 V3 2.5" Chassis Front BP1 SAS/SATA Cable Kit
10	0	8	0	0	0	0	0	0	0	0	0	• **4XH7A82913**, ThinkSystem SR650 V3 8x2.5" AnyBay Backplane Option Kit • **4X97A82933**, ThinkSystem SR650 V3 2.5" Chassis Front BP1 SAS/SATA Cable Kit • **4X97A82932**, ThinkSystem SR650 V3 2.5" Chassis Front BP1 NVMe Cable Kit
11	0	0	8	0	0	0	0	0	0	0	0	• **4XH7A61076**, ThinkSystem SR650 V2 8x2.5" NVMe Backplane Option Kit • **4X97A82932**, ThinkSystem SR650 V3 2.5" Chassis Front BP1 NVMe Cable Kit
12	16	0	0	0	0	0	0	0	0	0	0	• **4XH7A60930**, ThinkSystem V2/V3 2U 8x2.5" SAS/SATA Backplane Option Kit • **4XH7A60930**, ThinkSystem V2/V3 2U 8x2.5" SAS/SATA Backplane Option Kit • **4X97A82933**, ThinkSystem SR650 V3 2.5" Chassis Front BP1 SAS/SATA Cable Kit • **4X97A82935**, ThinkSystem SR650 V3 2.5" Chassis Front BP2 SAS/SATA Cable Kit
13	0	8	8	0	0	0	0	0	0	0	0	• **4XH7A82913**, ThinkSystem SR650 V3 8x2.5" AnyBay Backplane Option Kit • **4XH7A61076**, ThinkSystem SR650 V2 8x2.5" NVMe Backplane Option Kit • **4X97A82933**, ThinkSystem SR650 V3 2.5" Chassis Front BP1 SAS/SATA Cable Kit • **4X97A82932**, ThinkSystem SR650 V3 2.5" Chassis Front BP1 NVMe Cable Kit • **4X97A82934**, ThinkSystem SR650 V3 2.5" Chassis Front BP2 NVMe Cable Kit

Config	2.5" front bays				Mid bays			Rear bays				Backplane and cable kits required (all required)
	SAS/ SATA	Any Bay	NVMe	Tri-Mode	3.5" SAS	2.5" SAS	2.5" NVMe	3.5" SAS	2.5" SAS	2.5" NVMe	2.5" Any	
14A	0	0	16	0	0	0	0	0	0	0	0	• **4XH7A61076**, ThinkSystem SR650 V2 8x2.5" NVMe Backplane Option Kit • **4XH7A61076**, ThinkSystem SR650 V2 8x2.5" NVMe Backplane Option Kit • **4X97A82932**, ThinkSystem SR650 V3 2.5" Chassis Front BP1 NVMe Cable Kit • **4X97A82934**, ThinkSystem SR650 V3 2.5" Chassis Front BP2 NVMe Cable Kit
14B	0	0	0	16	0	0	0	0	0	0	0	• **4XH7A82913**, ThinkSystem SR650 V3 8x2.5" AnyBay Backplane Option Kit • **4XH7A82913**, ThinkSystem SR650 V3 8x2.5" AnyBay Backplane Option Kit • **4X97A82933**, ThinkSystem SR650 V3 2.5" Chassis Front BP1 SAS/SATA Cable Kit • **4X97A82935**, ThinkSystem SR650 V3 2.5" Chassis Front BP2 SAS/SATA Cable Kit
15	8	8	0	0	0	0	0	0	0	0	0	• **4XH7A60930**, ThinkSystem V2/V3 2U 8x2.5" SAS/SATA Backplane Option Kit • **4XH7A82913**, ThinkSystem SR650 V3 8x2.5" AnyBay Backplane Option Kit • **4X97A82933**, ThinkSystem SR650 V3 2.5" Chassis Front BP1 SAS/SATA Cable Kit • **4X97A82935**, ThinkSystem SR650 V3 2.5" Chassis Front BP2 SAS/SATA Cable Kit • **4X97A82934**, ThinkSystem SR650 V3 2.5" Chassis Front BP2 NVMe Cable Kit
16	8	0	8	0	0	0	0	0	0	0	0	• **4XH7A60930**, ThinkSystem V2/V3 2U 8x2.5" SAS/SATA Backplane Option Kit • **4XH7A61076**, ThinkSystem SR650 V2 8x2.5" NVMe Backplane Option Kit • **4X97A82933**, ThinkSystem SR650 V3 2.5" Chassis Front BP1 SAS/SATA Cable Kit • **4X97A82934**, ThinkSystem SR650 V3 2.5" Chassis Front BP2 NVMe Cable Kit

Config	2.5" front bays				Mid bays			Rear bays				Backplane and cable kits required (all required)
	SAS/ SATA	Any Bay	NVMe	Tri-Mode	3.5" SAS	2.5" SAS	2.5" NVMe	3.5" SAS	2.5" SAS	2.5" NVMe	2.5" Any	
17	16	8	0	0	0	0	0	0	0	0	0	• **4XH7A60930**, ThinkSystem V2/V3 2U 8x2.5" SAS/SATA Backplane Option Kit • **4XH7A60930**, ThinkSystem V2/V3 2U 8x2.5" SAS/SATA Backplane Option Kit • **4XH7A82913**, ThinkSystem SR650 V3 8x2.5" AnyBay Backplane Option Kit • **4X97A82933**, ThinkSystem SR650 V3 2.5" Chassis Front BP1 SAS/SATA Cable Kit • **4X97A82935**, ThinkSystem SR650 V3 2.5" Chassis Front BP2 SAS/SATA Cable Kit • **4X97A82937**, ThinkSystem SR650 V3 2.5" Chassis Front BP3 SAS/SATA Cable Kit • **4X97A82936**, ThinkSystem SR650 V3 2.5" Chassis Front BP3 NVMe Cable Kit
18	16	0	8	0	0	0	0	0	0	0	0	• **4XH7A60930**, ThinkSystem V2/V3 2U 8x2.5" SAS/SATA Backplane Option Kit • **4XH7A60930**, ThinkSystem V2/V3 2U 8x2.5" SAS/SATA Backplane Option Kit • **4XH7A61076**, ThinkSystem SR650 V2 8x2.5" NVMe Backplane Option Kit • **4X97A82933**, ThinkSystem SR650 V3 2.5" Chassis Front BP1 SAS/SATA Cable Kit • **4X97A82935**, ThinkSystem SR650 V3 2.5" Chassis Front BP2 SAS/SATA Cable Kit • **4X97A82936**, ThinkSystem SR650 V3 2.5" Chassis Front BP3 NVMe Cable Kit
19-1/2	8	0	16	0	0	0	0	0	0	0	0	• **4XH7A60930**, ThinkSystem V2/V3 2U 8x2.5" SAS/SATA Backplane Option Kit • **4XH7A61076**, ThinkSystem SR650 V2 8x2.5" NVMe Backplane Option Kit • **4XH7A61076**, ThinkSystem SR650 V2 8x2.5" NVMe Backplane Option Kit • **4X97A82933**, ThinkSystem SR650 V3 2.5" Chassis Front BP1 SAS/SATA Cable Kit • **4X97A82934**, ThinkSystem SR650 V3 2.5" Chassis Front BP2 NVMe Cable Kit • **4X97A82936**, ThinkSystem SR650 V3 2.5" Chassis Front BP3 NVMe Cable Kit

Config	2.5" front bays				Mid bays			Rear bays				Backplane and cable kits required (all required)
	SAS/ SATA	Any Bay	NVMe	Tri-Mode	3.5" SAS	2.5" SAS	2.5" NVMe	3.5" SAS	2.5" SAS	2.5" NVMe	2.5" Any	
19-3	8	0	0	16	0	0	0	0	0	0	0	• **4XH7A60930**, ThinkSystem V2/V3 2U 8x2.5" SAS/SATA Backplane Option Kit • **4XH7A82913**, ThinkSystem SR650 V3 8x2.5" AnyBay Backplane Option Kit • **4XH7A82913**, ThinkSystem SR650 V3 8x2.5" AnyBay Backplane Option Kit • **4X97A82933**, ThinkSystem SR650 V3 2.5" Chassis Front BP1 SAS/SATA Cable Kit • **4X97A82935**, ThinkSystem SR650 V3 2.5" Chassis Front BP2 SAS/SATA Cable Kit • **4X97A82937**, ThinkSystem SR650 V3 2.5" Chassis Front BP3 SAS/SATA Cable Kit
20	24	0	0	0	0	0	0	0	0	0	0	• **4XH7A60930**, ThinkSystem V2/V3 2U 8x2.5" SAS/SATA Backplane Option Kit • **4XH7A60930**, ThinkSystem V2/V3 2U 8x2.5" SAS/SATA Backplane Option Kit • **4XH7A60930**, ThinkSystem V2/V3 2U 8x2.5" SAS/SATA Backplane Option Kit • **4X97A82933**, ThinkSystem SR650 V3 2.5" Chassis Front BP1 SAS/SATA Cable Kit • **4X97A82935**, ThinkSystem SR650 V3 2.5" Chassis Front BP2 SAS/SATA Cable Kit • **4X97A82937**, ThinkSystem SR650 V3 2.5" Chassis Front BP3 SAS/SATA Cable Kit
21-1	0	0	24	0	0	0	0	0	0	0	0	• **4XH7A61076**, ThinkSystem SR650 V2 8x2.5" NVMe Backplane Option Kit • **4XH7A61076**, ThinkSystem SR650 V2 8x2.5" NVMe Backplane Option Kit • **4XH7A61076**, ThinkSystem SR650 V2 8x2.5" NVMe Backplane Option Kit • **4X97A82942**, ThinkSystem SR650 V3 24x2.5" NVMe Cable Kit

Config	2.5" front bays				Mid bays			Rear bays				Backplane and cable kits required (all required)
	SAS/ SATA	Any Bay	NVMe	Tri-Mode	3.5" SAS	2.5" SAS	2.5" NVMe	3.5" SAS	2.5" SAS	2.5" NVMe	2.5" Any	
21-2/3	0	0	0	24	0	0	0	0	0	0	0	• **4XH7A82913**, ThinkSystem SR650 V3 8x2.5" AnyBay Backplane Option Kit • **4XH7A82913**, ThinkSystem SR650 V3 8x2.5" AnyBay Backplane Option Kit • **4XH7A82913**, ThinkSystem SR650 V3 8x2.5" AnyBay Backplane Option Kit • **4X97A82933**, ThinkSystem SR650 V3 2.5" Chassis Front BP1 SAS/SATA Cable Kit • **4X97A82935**, ThinkSystem SR650 V3 2.5" Chassis Front BP2 SAS/SATA Cable Kit • **4X97A82937**, ThinkSystem SR650 V3 2.5" Chassis Front BP3 SAS/SATA Cable Kit
21A	0	8	16	0	0	0	0	0	0	0	0	• **4XH7A82913**, ThinkSystem SR650 V3 8x2.5" AnyBay Backplane Option Kit • **4XH7A61076**, ThinkSystem SR650 V2 8x2.5" NVMe Backplane Option Kit • **4XH7A61076**, ThinkSystem SR650 V2 8x2.5" NVMe Backplane Option Kit • **4X97A82933**, ThinkSystem SR650 V3 2.5" Chassis Front BP1 SAS/SATA Cable Kit • **4X97A82932**, ThinkSystem SR650 V3 2.5" Chassis Front BP1 NVMe Cable Kit • **4X97A82934**, ThinkSystem SR650 V3 2.5" Chassis Front BP2 NVMe Cable Kit • **4X97A82936**, ThinkSystem SR650 V3 2.5" Chassis Front BP3 NVMe Cable Kit

Config	2.5" front bays				Mid bays			Rear bays				Backplane and cable kits required (all required)
	SAS/ SATA	Any Bay	NVMe	Tri-Mode	3.5" SAS	2.5" SAS	2.5" NVMe	3.5" SAS	2.5" SAS	2.5" NVMe	2.5" Any	
22	16	8	0	0	0	0	0	0	4	0	0	• **4XH7A60930**, ThinkSystem V2/V3 2U 8x2.5" SAS/SATA Backplane Option Kit • **4XH7A60930**, ThinkSystem V2/V3 2U 8x2.5" SAS/SATA Backplane Option Kit • **4XH7A60934**, ThinkSystem SR665 8x2.5" AnyBay Backplane Option Kit • **4XH7A60938**, ThinkSystem V2/V3 2U Rear 4x2.5" SAS/SATA Backplane Option Kit • **4X97A82933**, ThinkSystem SR650 V3 2.5" Chassis Front BP1 SAS/SATA Cable Kit • **4X97A82935**, ThinkSystem SR650 V3 2.5" Chassis Front BP2 SAS/SATA Cable Kit • **4X97A82937**, ThinkSystem SR650 V3 2.5" Chassis Front BP3 SAS/SATA Cable Kit • **4X97A82936**, ThinkSystem SR650 V3 2.5" Chassis Front BP3 NVMe Cable Kit • **4X97A82938**, ThinkSystem SR650 V3 2.5" Chassis Rear Backplane SAS/SATA Cable Kit
23	24	0	0	0	0	0	0	0	4	0	0	• **4XH7A60930**, ThinkSystem V2/V3 2U 8x2.5" SAS/SATA Backplane Option Kit • **4XH7A60930**, ThinkSystem V2/V3 2U 8x2.5" SAS/SATA Backplane Option Kit • **4XH7A60930**, ThinkSystem V2/V3 2U 8x2.5" SAS/SATA Backplane Option Kit • **4XH7A60938**, ThinkSystem V2/V3 2U Rear 4x2.5" SAS/SATA Backplane Option Kit • **4X97A82933**, ThinkSystem SR650 V3 2.5" Chassis Front BP1 SAS/SATA Cable Kit • **4X97A82935**, ThinkSystem SR650 V3 2.5" Chassis Front BP2 SAS/SATA Cable Kit • **4X97A82937**, ThinkSystem SR650 V3 2.5" Chassis Front BP3 SAS/SATA Cable Kit • **4X97A82938**, ThinkSystem SR650 V3 2.5" Chassis Rear Backplane SAS/SATA Cable Kit

Config	2.5" front bays				Mid bays			Rear bays				Backplane and cable kits required (all required)
	SAS/ SATA	Any Bay	NVMe	Tri-Mode	3.5" SAS	2.5" SAS	2.5" NVMe	3.5" SAS	2.5" SAS	2.5" NVMe	2.5" Any	
23A	24	0	0	0	0	0	0	0	8	0	0	• **4XH7A60930**, ThinkSystem V2/V3 2U 8x2.5" SAS/SATA Backplane Option Kit • **4XH7A60930**, ThinkSystem V2/V3 2U 8x2.5" SAS/SATA Backplane Option Kit • **4XH7A60930**, ThinkSystem V2/V3 2U 8x2.5" SAS/SATA Backplane Option Kit • **4XH7A60941**, ThinkSystem SR650 V2/SR665 Rear 8x2.5" SAS/SATA Backplane Option Kit • **4X97A82933**, ThinkSystem SR650 V3 2.5" Chassis Front BP1 SAS/SATA Cable Kit • **4X97A82935**, ThinkSystem SR650 V3 2.5" Chassis Front BP2 SAS/SATA Cable Kit • **4X97A82937**, ThinkSystem SR650 V3 2.5" Chassis Front BP3 SAS/SATA Cable Kit • **4X97A82938**, ThinkSystem SR650 V3 2.5" Chassis Rear Backplane SAS/SATA Cable Kit
24	0	0	24	0	0	0	8	0	0	0	0	• **4XH7A61076**, ThinkSystem SR650 V2 8x2.5" NVMe Backplane Option Kit • **4XH7A61076**, ThinkSystem SR650 V2 8x2.5" NVMe Backplane Option Kit • **4XH7A61059**, ThinkSystem SR665 8x2.5" NVMe Backplane option Kit • **4XH7A82915**, ThinkSystem SR650 V3 Middle 8x2.5" NVMe Backplane Option Kit • **4X97A82943**, ThinkSystem SR650 V3 32x2.5" NVMe Cable Kit

Config	2.5" front bays				Mid bays			Rear bays				Backplane and cable kits required (all required)
	SAS/ SATA	Any Bay	NVMe	Tri-Mode	3.5" SAS	2.5" SAS	2.5" NVMe	3.5" SAS	2.5" SAS	2.5" NVMe	2.5" Any	
25	24	0	0	0	0	8	0	0	8	0	0	• **4XH7A60930**, ThinkSystem V2/V3 2U 8x2.5" SAS/SATA Backplane Option Kit • **4XH7A60930**, ThinkSystem V2/V3 2U 8x2.5" SAS/SATA Backplane Option Kit • **4XH7A60930**, ThinkSystem V2/V3 2U 8x2.5" SAS/SATA Backplane Option Kit • **4XH7A82914**, ThinkSystem SR650 V3 Middle 8x2.5" SAS/SATA Backplane Option Kit • **4XH7A60941**, ThinkSystem SR650 V2/SR665 Rear 8x2.5" SAS/SATA Backplane Option Kit • **4X97A82933**, ThinkSystem SR650 V3 2.5" Chassis Front BP1 SAS/SATA Cable Kit • **4X97A82935**, ThinkSystem SR650 V3 2.5" Chassis Front BP2 SAS/SATA Cable Kit • **4X97A82937**, ThinkSystem SR650 V3 2.5" Chassis Front BP3 SAS/SATA Cable Kit • **4X97A82939**, ThinkSystem SR650 V3 2.5" Chassis Middle Backplane SAS/SATA Cable Kit • **4X97A82938**, ThinkSystem SR650 V3 2.5" Chassis Rear Backplane SAS/SATA Cable Kit
25A	24	0	0	0	0	4	0	0	0	0	0	• **4XH7A60930**, ThinkSystem V2/V3 2U 8x2.5" SAS/SATA Backplane Option Kit • **4XH7A60930**, ThinkSystem V2/V3 2U 8x2.5" SAS/SATA Backplane Option Kit • **4XH7A60930**, ThinkSystem V2/V3 2U 8x2.5" SAS/SATA Backplane Option Kit • **4XH7A87509**, ThinkSystem SR650 V3 Middle 4x2.5" SAS/SATA Backplane Option Kit • **4X97A82933**, ThinkSystem SR650 V3 2.5" Chassis Front BP1 SAS/SATA Cable Kit • **4X97A82935**, ThinkSystem SR650 V3 2.5" Chassis Front BP2 SAS/SATA Cable Kit • **4X97A82937**, ThinkSystem SR650 V3 2.5" Chassis Front BP3 SAS/SATA Cable Kit • **4X97A82939**, ThinkSystem SR650 V3 2.5" Chassis Middle Backplane SAS/SATA Cable Kit

Config	2.5" front bays				Mid bays			Rear bays				Backplane and cable kits required (all required)
	SAS/ SATA	Any Bay	NVMe	Tri-Mode	3.5" SAS	2.5" SAS	2.5" NVMe	3.5" SAS	2.5" SAS	2.5" NVMe	2.5" Any	
25B	24	0	0	0	0	8	0	0	0	0	0	• **4XH7A60930**, ThinkSystem V2/V3 2U 8x2.5" SAS/SATA Backplane Option Kit • **4XH7A60930**, ThinkSystem V2/V3 2U 8x2.5" SAS/SATA Backplane Option Kit • **4XH7A60930**, ThinkSystem V2/V3 2U 8x2.5" SAS/SATA Backplane Option Kit • **4XH7A82914**, ThinkSystem SR650 V3 Middle 8x2.5" SAS/SATA Backplane Option Kit • **4X97A82933**, ThinkSystem SR650 V3 2.5" Chassis Front BP1 SAS/SATA Cable Kit • **4X97A82935**, ThinkSystem SR650 V3 2.5" Chassis Front BP2 SAS/SATA Cable Kit • **4X97A82937**, ThinkSystem SR650 V3 2.5" Chassis Front BP3 SAS/SATA Cable Kit • **4X97A82939**, ThinkSystem SR650 V3 2.5" Chassis Middle Backplane SAS/SATA Cable Kit
25C	24	0	0	0	0	8	0	0	4	0	0	• **4XH7A60930**, ThinkSystem V2/V3 2U 8x2.5" SAS/SATA Backplane Option Kit • **4XH7A60930**, ThinkSystem V2/V3 2U 8x2.5" SAS/SATA Backplane Option Kit • **4XH7A60930**, ThinkSystem V2/V3 2U 8x2.5" SAS/SATA Backplane Option Kit • **4XH7A82914**, ThinkSystem SR650 V3 Middle 8x2.5" SAS/SATA Backplane Option Kit • **4XH7A60938**, ThinkSystem V2/V3 2U Rear 4x2.5" SAS/SATA Backplane Option Kit • **4X97A82933**, ThinkSystem SR650 V3 2.5" Chassis Front BP1 SAS/SATA Cable Kit • **4X97A82935**, ThinkSystem SR650 V3 2.5" Chassis Front BP2 SAS/SATA Cable Kit • **4X97A82937**, ThinkSystem SR650 V3 2.5" Chassis Front BP3 SAS/SATA Cable Kit • **4X97A82939**, ThinkSystem SR650 V3 2.5" Chassis Middle Backplane SAS/SATA Cable Kit • **4X97A82938**, ThinkSystem SR650 V3 2.5" Chassis Rear Backplane SAS/SATA Cable Kit

Config	2.5" front bays				Mid bays			Rear bays				Backplane and cable kits required (all required)
	SAS/ SATA	Any Bay	NVMe	Tri-Mode	3.5" SAS	2.5" SAS	2.5" NVMe	3.5" SAS	2.5" SAS	2.5" NVMe	2.5" Any	
27	14	0	0	0	0	0	0	0	0	0	0	• **4XH7A60930**, ThinkSystem V2/V3 2U 8x2.5" SAS/SATA Backplane Option Kit • **4XH7A60930**, ThinkSystem V2/V3 2U 8x2.5" SAS/SATA Backplane Option Kit • **4X97A82933**, ThinkSystem SR650 V3 2.5" Chassis Front BP1 SAS/SATA Cable Kit • **4X97A82935**, ThinkSystem SR650 V3 2.5" Chassis Front BP2 SAS/SATA Cable Kit
29A/B	0	16	0	0	0	0	0	0	0	0	0	• **4XH7A82913**, ThinkSystem SR650 V3 8x2.5" AnyBay Backplane Option Kit • **4XH7A82913**, ThinkSystem SR650 V3 8x2.5" AnyBay Backplane Option Kit • **4X97A82933**, ThinkSystem SR650 V3 2.5" Chassis Front BP1 SAS/SATA Cable Kit • **4X97A82932**, ThinkSystem SR650 V3 2.5" Chassis Front BP1 NVMe Cable Kit • **4X97A82935**, ThinkSystem SR650 V3 2.5" Chassis Front BP2 SAS/SATA Cable Kit • **4X97A82934**, ThinkSystem SR650 V3 2.5" Chassis Front BP2 NVMe Cable Kit
41	0	0	0	8	0	0	0	0	0	0	0	• **4XH7A82913**, ThinkSystem SR650 V3 8x2.5" AnyBay Backplane Option Kit • **4X97A82933**, ThinkSystem SR650 V3 2.5" Chassis Front BP1 SAS/SATA Cable Kit
47	24-EXP	0	0	0	0	0	0	0	0	0	0	• **4XH7A86134**, ThinkSystem 2U V3 24x2.5" Expander Backplane Option Kit • **4X97A87505**, ThinkSystem SR650 V3 3.5"/2.5" Chassis Front Expander Backplane SAS/SATA Cable Kit
48	24-EXP	0	0	0	0	0	0	0	4	0	0	• **4XH7A86134**, ThinkSystem 2U V3 24x2.5" Expander Backplane Option Kit • **4XH7A60938**, ThinkSystem V2/V3 2U Rear 4x2.5" SAS/SATA Backplane Option Kit • **4X97A87505**, ThinkSystem SR650 V3 3.5"/2.5" Chassis Front Expander Backplane SAS/SATA Cable Kit • **4X97A82938**, ThinkSystem SR650 V3 2.5" Chassis Rear Backplane SAS/SATA Cable Kit

Config	2.5" front bays				Mid bays			Rear bays				Backplane and cable kits required (all required)
	SAS/ SATA	Any Bay	NVMe	Tri-Mode	3.5" SAS	2.5" SAS	2.5" NVMe	3.5" SAS	2.5" SAS	2.5" NVMe	2.5" Any	
49	24-EXP	0	0	0	0	0	0	0	0	0	4	• **4XH7A86134**, ThinkSystem 2U V3 24x2.5" Expander Backplane Option Kit • **4XH7A86661**, ThinkSystem 1U 4x2.5" AnyBay Backplane • **4X97A87505**, ThinkSystem SR650 V3 3.5"/2.5" Chassis Front Expander Backplane SAS/SATA Cable Kit • **4X97A82938**, ThinkSystem SR650 V3 2.5" Chassis Rear Backplane SAS/SATA Cable Kit • **4X97A87062**, ThinkSystem SR650 V3 2.5" Chassis Rear Backplane NVMe Cable Kit
50	24-EXP	0	0	0	0	0	0	0	8	0	0	• **4XH7A86134**, ThinkSystem 2U V3 24x2.5" Expander Backplane Option Kit • **4XH7A60941**, ThinkSystem SR650 V2/SR665 Rear 8x2.5" SAS/SATA Backplane Option Kit • **4X97A87505**, ThinkSystem SR650 V3 3.5"/2.5" Chassis Front Expander Backplane SAS/SATA Cable Kit • **4X97A82938**, ThinkSystem SR650 V3 2.5" Chassis Rear Backplane SAS/SATA Cable Kit

Upgrading to an internal adapter

If you have an existing configuration with an HBA or RAID adapter installed in one of the rear PCIe slots, and you wish to upgrade to one of the internal (CFF) storage adapters (HBA, RAID or SAS expander), you will need to order an additional cable kit as listed in the following table.

The cable kit to order is listed in the following table.

Table 21. Cable kit when upgrading to an Internal HBA/RAID adapter

Part number	Description
4X97A82941	ThinkSystem SR650 V3 Internal HBA/RAID Adapter Cable Kit

When adding drive bays, you will also need to add the appropriate CFF storage controller(s).

RAID flash power module (supercap) support

If you plan to add one of the RAID adapters that includes a RAID flash power module (supercap) as a field upgrade, then you may also need to order a Supercap installation kit for the supercap, depending on the location where the supercap will be installed. For CTO orders, the components needed are automatically derived when you select the RAID adapter.

The adapters that this applies to are as follows:

- Any supported RAID 9350 adapter
- Any supported RAID 940 adapter

The location of the supercaps depends on the mid-chassis drive cage used in the server, as shown in the following table.

Table 22. Supercap support

Mid drive cage	Supercaps supported	Location of supercaps	Supercap holder
No mid drive cage	4	Mounted on the air baffle	Not needed
2.5-inch drives	2	Mounted on the left side of the mid drive cage	Included with mid drive cage
3.5-inch drives	2	Mounted under the system fan cage	Order separately for field upgrades (see following table)

When adding a RAID 9350 or 940 adapter as a field upgrade to a configuration with 3.5-inch mid drive bays, order one supercap holder. Ordering information is in the following table.

Table 23. Supercap holder for 3.5-inch mid drive bay config

Part number	Feature	Description	Maximum supported
4XH7A86163	BLL8	ThinkSystem V3 2U Supercap Holder Kit	1 (holds 2 supercaps)

7mm drives

The SR650 V3 supports two 7mm drives, either both SATA or both NVMe, at the rear of the server. These drives go in place of either PCIe slot 3 (Riser 1) or PCIe slot 6 (Riser 2) as shown in the following figure.

Tip: These 7mm drives can be used in conjunction with any rear drive 2.5-inch or 3.5-inch bay combination.

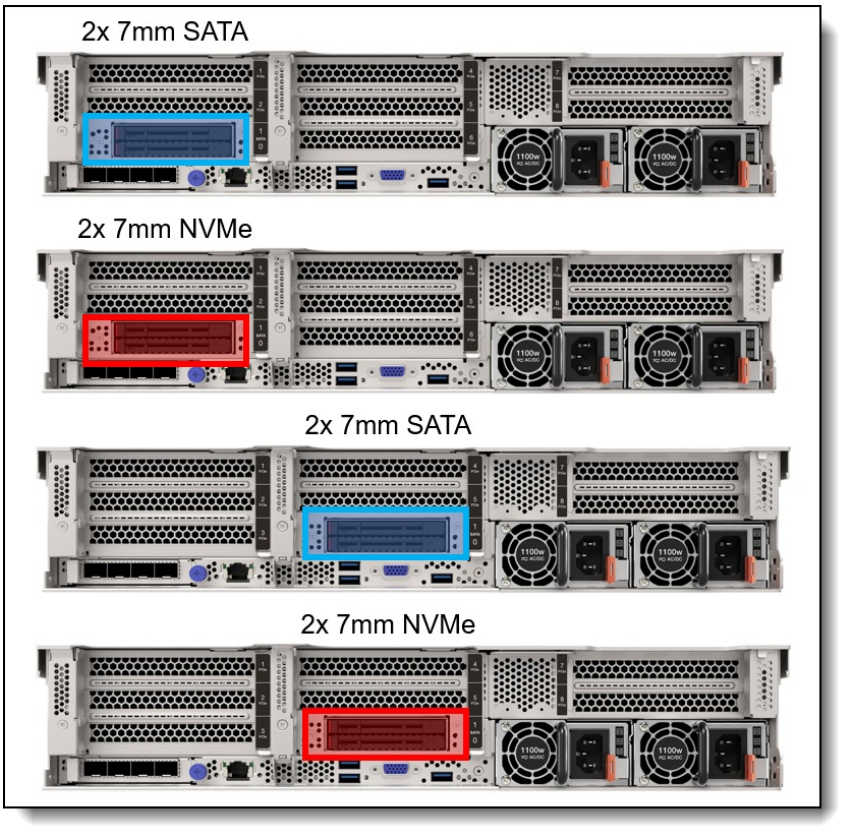

Figure 14. Rear 7mm drive bay configurations

For CTO orders, the configuration includes the drive bays and the cage the the drive bays are mounted on to.The cage required depends on where the 7mm drives are located (Riser 1 or Riser 2) and whether there are PCIe slots above the 7mm drive bays. The following table lists the ordering information.

Tip for 4x 3.5-inch rear drives: If you wish to configure 4x 3.5-inch rear drives plus 7mm drives in a CTO configuration, the 7mm drives will install in slot 6. You should specify riser card BLKP for Riser 1 and then leave Riser 2 without a riser selected.

Table 24. CTO feature code for 7mm drives

Feature code	Description	Maximum supported
Backplane - 7mm drives		
BU0N	ThinkSystem 7mm SATA/NVMe 2-Bay Rear Enablement Kit v2	1

The use of the 7mm rear drive bays has the following configuration rules:

- The 7mm drive bays support either SATA drives or NVMe drives but not both. You specify SATA or NVMe in the configurator using feature codes BTTV (SATA) or BTTW (NVMe).
- The 7mm rear drive kit is supported in either slot 3 or slot 6 but not both at the same time.
- RAID support is implemented using VROC SATA or VROC NVMe; No additional adapter is required nor supported.
- M.2 RAID and 7mm RAID are mutually exclusive: they are not supported together in the same configuration

For field upgrades, using the following ordering information. The kit includes two cages for use depending on your PCIe slot configuration. The cages are for either Riser 1 or Riser 2.

Table 25. Field upgrade part number for 7mm drives

Part number	Description
4XH7A87068	ThinkSystem SR650 V3 7mm SATA/NVMe 2-Bay Non-Raid Enablement Kit • 2-bay SATA/NVMe hot-swap drive enclosure • 1x 2FH+7mm SSD Riser cages (with 2 FH PCIe slots) • 7mm SSD Riser Cage (without PCIe slots) • 2x 7mm drive bay fillers • Signal and power cables for onboard connections

M.2 drives

The SR650 V3 supports one or two M.2 form-factor SATA or NVMe drives for use as an operating system boot solution or as additional storage.

The M.2 drives install into an M.2 module which is mounted horizontally in the server in front of the fans as shown in the Internal view of the server. In configurations with 2.5-inch front drive bays, the M.2 module is position between the drive bays and the fans. In configurations with 3.5-inch front drive bays, the M.2 module is mounted on top of the front drive bays.

The supported M.2 module is listed in the following table. For field upgrades see the M.2 field upgrades section below.

Table 26. M.2 modules

Part number	Feature code	Description	SATA drives	NVMe drives	RAID	Maximum supported
4Y37A79663	BM8X	ThinkSystem M.2 SATA/x4 NVMe 2-Bay Enablement Kit	Yes	Yes (x4 lanes)	VROC	1

Configuration notes:

- M.2 is not supported with all storage configurations - see Storage configurations for details.
- RAID support is implemented using VROC SATA or VROC NVMe; No additional adapter is required nor supported.
- M.2 is not supported with 3.5-inch front drive bays due to physical limitations
- M.2 SATA and 7mm SATA are mutually exclusive: they are not supported together in the same configuration

The ThinkSystem M.2 SATA/x4 NVMe 2-Bay Enablement Kit has the following features:

- Supports one or two M.2 drives, either SATA or NVMe
- When two drives installed, they must be either both SATA or both NVMe
- Support 42mm, 60mm, 80mm and 110mm drive form factors (2242, 2260, 2280 and 22110)
- On the SR650 V3, RAID support is implemented using VROC SATA or VROC NVMe
- Either 6Gbps SATA or PCIe 4.0 x4 interface to the drives depending on the drives installed
- Supports monitoring and reporting of events and temperature through I2C
- Firmware update via Lenovo firmware update tools

M.2 field upgrades

For field upgrades, the SR650 V3 also requires an additional M.2 cable kit. Ordering information is listed in the following table.

Table 27. M.2 Cable Kits for field upgrades

Part number	Description
4X97A82924	ThinkSystem SR650 V3 x4 M.2 SATA/NVMe Non-RAID Cable Kit

SED encryption key management with ISKLM

The server supports self-encrypting drives (SEDs) as listed in the Internal drive options section. To effectively manage a large deployment of these drives in Lenovo servers, IBM Security Key Lifecycle Manager (SKLM) offers a centralized key management solution. A Lenovo Feature on Demand (FoD) upgrade is used to enable this SKLM support in the management processor of the server.

The following table lists the part numbers and feature codes for the upgrades.

Table 28. FoD upgrades for SKLM support

Part number	Feature code	Description
Security Key Lifecycle Manager - FoD (United States, Canada, Asia Pacific, and Japan)		
00D9998	A5U1	SKLM for System x/ThinkSystem w/SEDs - FoD per Install with 1 year S&S
00D9999	AS6C	SKLM for System x/ThinkSystem w/SEDs - FoD per Install with 3 year S&S
Security Key Lifecycle Manager - FoD (Latin America, Europe, Middle East, and Africa)		
00FP648	A5U1	SKLM for System x/ThinkSystem w/SEDs - FoD per Install with 1 year S&S
00FP649	AS6C	SKLM for System x/ThinkSystem w/SEDs - FoD per Install with 3 year S&S

The IBM Security Key Lifecycle Manager software is available from Lenovo using the ordering information listed in the following table.

Table 29. IBM Security Key Lifecycle Manager licenses

Part number	Description
7S0A007FWW	IBM Security Key Lifecycle Manager Basic Edition Install License + SW Subscription & Support 12 Months
7S0A007HWW	IBM Security Key Lifecycle Manager For Raw Decimal Terabyte Storage Resource Value Unit License + SW Subscription & Support 12 Months
7S0A007KWW	IBM Security Key Lifecycle Manager For Raw Decimal Petabyte Storage Resource Value Unit License + SW Subscription & Support 12 Months
7S0A007MWW	IBM Security Key Lifecycle Manager For Usable Decimal Terabyte Storage Resource Value Unit License + SW Subscription & Support 12 Months
7S0A007PWW	IBM Security Key Lifecycle Manager For Usable Decimal Petabyte Storage Resource Value Unit License + SW Subscription & Support 12 Months

Controllers for internal storage

The SR650 V3 offers a variety of controller options for internal drives:

- For 2.5-inch and 3.5-inch drives:
  - Onboard SATA ports with software RAID support (Intel VROC SATA RAID, formerly known as Intel RSTe)
  - Onboard NVMe ports with software RAID support (Intel VROC NVMe RAID)
  - RAID adapters and HBAs for SAS/SATA drives (PCIe slot-based)

    - RAID adapters and HBAs for SAS/SATA drives (cabled in a dedicated space)
- For 7mm drive bays in the rear of the server (see the 7mm drives section)
    - SATA controller integrated into the 7mm drive bay enclosure
    - NVMe controller integrated into the 7mm drive bay enclosure (Intel VROC for RAID)
- For M.2 drives internal to the server (see M.2 drives section)
    - SATA controller integrated on the M.2 adapters
    - NVMe controller integrated on the M.2 adapters (Intel VROC for RAID)

As well as supporting RAID adapters and HBAs that install in a PCIe slot, the SR650 V3 with 2.5-inch front drive bays supports a custom form factor (CFF) adapter that is mounted in the server and cabled to one of the onboard NVMe ports. CFF adapters are not supported with 3.5-inch front drives due to a lack of physical space.

The following table lists the adapters used for the internal storage of the server.

Table 30. Internal Storage adapter support

Part number	Feature code	Description	Maximum supported	Slots supported
Onboard SATA - up to 14 drives - Intel VROC SATA RAID (Intel RSTe)				
None	AVV0	On Board SATA Software RAID Mode	1	Not applicable
Onboard NVMe - up to 20 drives - Intel VROC NVMe RAID				
None	BR9B	Intel VROC (VMD NVMe RAID) Standard (supports RAID 0, 1, 10 for all brands of drives)	1	Not applicable
4L47A39164	B96G	Intel VROC (VMD NVMe RAID) Premium (license upgrade - to enable RAID-5 support)	1	Not applicable
SAS HBA - PCIe 3.0				
4Y37A72480	BJHH	ThinkSystem 4350-8i SAS/SATA 12Gb HBA	4	1,2,3,4,5,6
4Y37A72481	BJHJ	ThinkSystem 4350-16i SAS/SATA 12Gb HBA	2	1,2,3,4,5,6
SAS HBA - PCIe 4.0				
4Y37A78601	BM51	ThinkSystem 440-8i SAS/SATA PCIe Gen4 12Gb HBA	4	1,2,3,4,5,6
4Y37A78602	BM50	ThinkSystem 440-16i SAS/SATA PCIe Gen4 12Gb HBA	2	1,2,3,4,5,6
4Y37A09725	B8P1	ThinkSystem 440-16i SAS/SATA PCIe Gen4 12Gb Internal HBA	1	CFF bay
RAID Adapter - PCIe 3.0				
4Y37A72482	BJHK	ThinkSystem RAID 5350-8i PCIe 12Gb Adapter	4	1,2,3,4,5,6
4Y37A84028	BRQV	ThinkSystem RAID 5350-8i PCIe 12Gb Internal Adapter	1	CFF bay
4Y37A72483	BJHL	ThinkSystem RAID 9350-8i 2GB Flash PCIe 12Gb Adapter	4	1,2,3,4,5,6
4Y37A72484	BJHM	ThinkSystem RAID 9350-8i 2GB Flash PCIe 12Gb Internal Adapter	1	CFF bay
4Y37A72485	BJHN	ThinkSystem RAID 9350-16i 4GB Flash PCIe 12Gb Adapter	2	1,2,3,4,5,6
4Y37A72486	BJHP	ThinkSystem RAID 9350-16i 4GB Flash PCIe 12Gb Internal Adapter	1	CFF bay
RAID Adapter - PCIe 4.0				
4Y37A78834	BMFT	ThinkSystem RAID 540-8i PCIe Gen4 12Gb Adapter	4	1,2,3,4,5,6
4Y37A78835	BNAX	ThinkSystem RAID 540-16i PCIe Gen4 12Gb Adapter	2	1,2,3,4,5,6
4Y37A09728†	B8NY	ThinkSystem RAID 940-8i 4GB Flash PCIe Gen4 12Gb Adapter	4	1,2,3,4,5,6

Part number	Feature code	Description	Maximum supported	Slots supported
4Y37A78600†	BM35	ThinkSystem RAID 940-16i 4GB Flash PCIe Gen4 12Gb Adapter	2	1,2,3,4,5,6
4Y37A09730†	B8NZ	ThinkSystem RAID 940-16i 8GB Flash PCIe Gen4 12Gb Adapter	2	1,2,3,4,5,6
4Y37A09735	B8P0	ThinkSystem RAID 940-16i 8GB Flash PCIe Gen4 12Gb Internal Adapter	1	CFF bay
4Y37A09733	B8P8	ThinkSystem RAID 940-32i 8GB Flash PCIe Gen4 12Gb Adapter	1	1,2,3,4,5,6
SAS expander				
4Y37A09736	B8P6	ThinkSystem 48 port 12Gb Internal Expander	1	CFF bay
NVMe				
4C57A65446	B98C	ThinkSystem 4-Port PCIe Gen4 NVMe Retimer Adapter	3	1,2,3,4,5,6
4Y37A09728†	BGM1	ThinkSystem RAID 940-8i 4GB Flash PCIe Gen4 12Gb Adapter for U.3	3	1,2,3,4,5,6
4Y37A78600†	BM36	ThinkSystem RAID 940-16i 4GB Flash PCIe Gen4 12Gb Adapter for U.3	1	1,2,3,4,5,6
4Y37A09730†	BDY4	ThinkSystem RAID 940-16i 8GB Flash PCIe Gen4 12Gb Adapter for U.3	1	1,2,3,4,5,6

* Only supported with 2.5-inch front drive bays. Not supported in configurations with 3.5-inch front drive bays.
† Adapter also supports PCIe 4.0 x1 connectivity to NVMe drives (requires NVMe drives with U.3 interface)
‡ Internal adapters (CFF) do not occupy any of the rear slots.

Configuration notes:

- **Supercap support limits the number of RAID adapters installable** : RAID 9350 and 940 adapters include a power module (supercap) to power the flash memory. The server supports between 1 and 4 supercaps depending on the server configuration as described in the RAID flash power module (supercap) support section. The number of supercaps supported also determines the maximum number of RAID adapters with flash that can be installed in the server.
- **Field upgrades**: If you are adding a RAID adapter with supercap to the server as a field upgrade, you may need a supercap holder as described in the RAID flash power module (supercap) support section.
- **7mm drive support**: The storage adapters listed in the table below do *not* provide connectivity to the 7mm drive bays that are optionally available at the rear of the server. The 7mm drives have their own independent RAID controller. See the 7mm drives section for details.
- **E810 Ethernet and X350 RAID/HBAs**: The use of both an Intel E810 network adapter and an X350 HBA/RAID adapter (9350, 5350 and 4350) is currently not supported in ThinkSystem servers. For details see Support Tip HT513226. Planned support for this combination of adapters is 2Q/2023 (23A).

The RAID 940-8i and RAID 940-16i adapters also support NVMe through a feature named Tri-Mode support (or Trimode support). This feature enables the use of NVMe U.3 drives at the same time as SAS and SATA drives. Cabling of the controller to the backplanes is the same as with SAS/SATA drives, and the NVMe drives are connected via a PCIe x1 link to the controller.

NVMe drives connected using Tri-Mode support provide better performance than SAS or SATA drives: A SATA SSD has a data rate of 6Gbps, a SAS SSD has a data rate of 12Gbps, whereas an NVMe U.3 Gen 4 SSD with a PCIe x1 link will have a data rate of 16Gbps. NVMe drives typically also have lower latency and higher IOPS compared to SAS and SATA drives. Tri-Mode is supported with U.3 NVMe drives in either 2.5-inch and 3.5-inch form factor and requires an AnyBay backplane.

Tri-Mode requires U.3 drives: Only NVMe drives with a U.3 interface are supported. U.2 drives are not supported. See the Internal drive options section for the U.3 drives supported by the server.

The onboard SATA controller has the following features:

- Controller integrated into the Intel PCH
- 6 Gbps SATA host interface
- Supports up to 14x SATA drives
- Supports RAID-0, 1, 5, 10 (Intel VROC SATA RAID, previously known as RSTe)
- Supports JBOD
- Supports HDDs and SSDs; can be mixed

The onboard NVMe support has the following features:

- Controller integrated into the Intel processor
- Supports up to 20x NVMe drives direct connected to onboard ports; additional drives through retimer/switch adapters
- Each drive has PCIe 5.0 x4 host interface
- Supports JBOD - Intel and non-Intel NVMe SSDs
- Supports RAID-0, 1, 10 on Intel and non-Intel NVMe SSDs - Intel VROC Standard
- VROC Premium adds RAID-5 support on Intel and non-Intel NVMe SSDs

Intel VROC onboard RAID

Intel VROC (Virtual RAID on CPU) is a feature of the Intel processor that enables RAID support.

There are two separate functions of VROC in the SR650 V3:

- Intel VROC SATA RAID, formerly known as Intel RSTe
- Intel VROC NVMe RAID

VROC SATA RAID (RSTe) is available and supported with all SATA drives, both SATA SSDs and SATA HDDs. It offers a 6 Gb/s connection to each drive and on the SR650 V3 implements RAID levels 0, 1, 5, and 10. RAID 1 is limited to 2 drives per array, and RAID 10 is limited to 4 drives per array. Hot-spare functionality is also supported.

VROC NVMe RAID offers RAID support for any NVMe drives directly connected to the ports on the server's system board or via adapters such as NVMe retimers or NVMe switch adapters. On the SR650 V3, it implements RAID levels 0, 1, and 10. RAID 1 is limited to 2 drives per array, and RAID 10 is limited to 4 drives per array. Hot-spare functionality is also supported.

Performance tip: For best performance with VROC NVMe RAID, the drives in an array should all be connected to the same processor. Spanning processors is possible however performance will be unpredictable and should be evaluated based on your workload.

By default, VROC NVMe RAID on the SR650 V3 does not support RAID 5 (VROC Standard, feature BR9B). If you wish to enable RAID-5 support, select the VROC Premium license using the ordering information in the following table. VROC Premium is fulfilled as a Feature on Demand (FoD) license and is activated via the XCC management processor user interface.

Table 31. VROC upgrade

Part number	Feature code	Description
4L47A39164	B96G	Intel VROC (VMD NVMe RAID) Premium

VROC Premium is only needed on the SR650 V3 for RAID-5 support with NVMe drives. You do not need the VROC Premium license upgrade under any of the following conditions:

- If you have SATA drives connected to the onboard SATA ports, you do not need VROC Premium
- If you are using RAID 0, 1 or 10 with NVMe drives, you do not need VROC Premium

Virtualization support: Virtualization support for Intel VROC is as follows:

- **VROC SATA RAID (RSTe)**: VROC SATA RAID is not supported by virtualization hypervisors such as ESXi, KVM, Xen, and Hyper-V. Virtualization is only supported on the onboard SATA ports in AHCI (non-RAID) mode.
- **VROC (VMD) NVMe RAID**: VROC (VMD) NVMe RAID is supported by ESXi, KVM, Xen, and Hyper-V. ESXi support is limited to RAID 1 only; other RAID levels are not supported. Windows and Linux OSes support VROC RAID NVMe, both for host boot functions and for guest OS function, and RAID-0, 1, 5, and 10 are supported.

For specifications about the RAID adapters and HBAs supported by the SR650 V3, see the ThinkSystem RAID Adapter and HBA Comparison, available from: https://lenovopress.com/lp1288-lenovo-thinksystem-raid-adapter-and-hba-reference#sr650-v2-support=SR650%2520V2

For details about these adapters, see the relevant product guide:

- SAS HBAs: https://lenovopress.com/servers/options/hba
- RAID adapters: https://lenovopress.com/servers/options/raid

Internal drive options

The following tables list the drive options for internal storage of the server.

2.5-inch hot-swap drives:

- 2.5-inch hot-swap 12 Gb SAS HDDs
- 2.5-inch hot-swap 24 Gb SAS SSDs
- 2.5-inch hot-swap 6 Gb SATA SSDs
- 2.5-inch hot-swap PCIe 4.0 NVMe SSDs

2.5-inch 7mm hot-swap drives:

- 7mm 2.5-inch hot-swap 6 Gb SATA SSDs
- 7mm 2.5-inch hot-swap PCIe 4.0 NVMe SSDs

3.5-inch hot-swap drives:

- 3.5-inch hot-swap 12 Gb SAS HDDs
- 3.5-inch hot-swap 6 Gb SATA HDDs
- 3.5-inch hot-swap 24 Gb SAS SSDs
- 3.5-inch hot-swap 6 Gb SATA SSDs
- 3.5-inch hot-swap PCIe 4.0 NVMe SSDs

M.2 drives:

- M.2 SATA drives
- M.2 PCIe 4.0 NVMe drives

M.2 drive support: The use of M.2 drives requires an additional adapter as described in the M.2 drives subsection.

SED support: The tables include a column to indicate which drives support SED encryption. The encryption functionality can be disabled if needed. Note: Not all SED-enabled drives have "SED" in the description.

Table 32. 2.5-inch hot-swap 12 Gb SAS HDDs

Part number	Feature code	Description	SED support	Max Qty
2.5-inch hot-swap HDDs - 12 Gb SAS 15K				
7XB7A00021	AULV	ThinkSystem 2.5" 300GB 15K SAS 12Gb Hot Swap 512n HDD	No	40
7XB7A00022	AULW	ThinkSystem 2.5" 600GB 15K SAS 12Gb Hot Swap 512n HDD	No	40
7XB7A00023	AULX	ThinkSystem 2.5" 900GB 15K SAS 12Gb Hot Swap 512e HDD	No	40
2.5-inch hot-swap HDDs - 12 Gb SAS 10K				
7XB7A00025	AULZ	ThinkSystem 2.5" 600GB 10K SAS 12Gb Hot Swap 512n HDD	No	40
7XB7A00027	AUM1	ThinkSystem 2.5" 1.2TB 10K SAS 12Gb Hot Swap 512n HDD	No	40
7XB7A00028	AUM2	ThinkSystem 2.5" 1.8TB 10K SAS 12Gb Hot Swap 512e HDD	No	40
4XB7A83970	BRG7	ThinkSystem 2.5" 2.4TB 10K SAS 12Gb Hot Swap 512e HDD v2	No	40
2.5-inch hot-swap SED HDDs - 12 Gb SAS 10K				
7XB7A00031	AUM5	ThinkSystem 2.5" 600GB 10K SAS 12Gb Hot Swap 512n HDD SED	Support	40
7XB7A00033	B0YX	ThinkSystem 2.5" 1.2TB 10K SAS 12Gb Hot Swap 512n HDD SED	Support	40
4XB7A84038	BRG8	ThinkSystem 2.5" 2.4TB 10K SAS 12Gb Hot Swap 512e HDD FIPS v2	Support	40

Table 33. 2.5-inch hot-swap 24 Gb SAS SSDs

Part number	Feature code	Description	SED support	Max Qty
2.5-inch hot-swap SSDs - 24 Gb SAS - Mixed Use/Mainstream (3-5 DWPD)				
4XB7A80340	BNW8	ThinkSystem 2.5" PM1655 800GB Mixed Use SAS 24Gb HS SSD	Support	40
4XB7A80341	BNW9	ThinkSystem 2.5" PM1655 1.6TB Mixed Use SAS 24Gb HS SSD	Support	40
4XB7A80342	BNW6	ThinkSystem 2.5" PM1655 3.2TB Mixed Use SAS 24Gb HS SSD	Support	40
4XB7A80343	BP3K	ThinkSystem 2.5" PM1655 6.4TB Mixed Use SAS 24Gb HS SSD	Support	40
2.5-inch hot-swap SSDs - 24 Gb SAS - Read Intensive/Entry/Capacity (<3 DWPD)				
4XB7A80318	BNWC	ThinkSystem 2.5" PM1653 960GB Read Intensive SAS 24Gb HS SSD	Support	40
4XB7A80319	BNWE	ThinkSystem 2.5" PM1653 1.92TB Read Intensive SAS 24Gb HS SSD	Support	40
4XB7A80320	BNWF	ThinkSystem 2.5" PM1653 3.84TB Read Intensive SAS 24Gb HS SSD	Support	40
4XB7A80321	BP3E	ThinkSystem 2.5" PM1653 7.68TB Read Intensive SAS 24Gb HS SSD	Support	40
4XB7A80322	BP3J	ThinkSystem 2.5" PM1653 15.36TB Read Intensive SAS 24Gb HS SSD	Support	40
4XB7A80323	BP3D	ThinkSystem 2.5" PM1653 30.72TB Read Intensive SAS 24Gb HS SSD	Support	40

Table 34. 2.5-inch hot-swap 6 Gb SATA SSDs

Part number	Feature code	Description	SED support	Max Qty
2.5-inch hot-swap SSDs - 6 Gb SATA - Mixed Use/Mainstream (3-5 DWPD)				
4XB7A82289	BQ21	ThinkSystem 2.5" 5400 MAX 480GB Mixed Use SATA 6Gb HS SSD	Support	40
4XB7A82290	BQ24	ThinkSystem 2.5" 5400 MAX 960GB Mixed Use SATA 6Gb HS SSD	Support	40
4XB7A82291	BQ22	ThinkSystem 2.5" 5400 MAX 1.92TB Mixed Use SATA 6Gb HS SSD	Support	40
4XB7A82292	BQ23	ThinkSystem 2.5" 5400 MAX 3.84TB Mixed Use SATA 6Gb HS SSD	Support	40
4XB7A17125	BA7Q	ThinkSystem 2.5" S4620 480GB Mixed Use SATA 6Gb HS SSD	No	40
4XB7A17126	BA4T	ThinkSystem 2.5" S4620 960GB Mixed Use SATA 6Gb HS SSD	No	40
4XB7A17127	BA4U	ThinkSystem 2.5" S4620 1.92TB Mixed Use SATA 6Gb HS SSD	No	40
4XB7A17128	BK7L	ThinkSystem 2.5" S4620 3.84TB Mixed Use SATA 6Gb HS SSD	No	40
2.5-inch hot-swap SSDs - 6 Gb SATA - Read Intensive/Entry (<3 DWPD)				
4XB7A82258	BQ1Q	ThinkSystem 2.5" 5400 PRO 240GB Read Intensive SATA 6Gb HS SSD	Support	40
4XB7A82259	BQ1P	ThinkSystem 2.5" 5400 PRO 480GB Read Intensive SATA 6Gb HS SSD	Support	40
4XB7A82260	BQ1R	ThinkSystem 2.5" 5400 PRO 960GB Read Intensive SATA 6Gb HS SSD	Support	40
4XB7A82261	BQ1X	ThinkSystem 2.5" 5400 PRO 1.92TB Read Intensive SATA 6Gb HS SSD	Support	40
4XB7A82262	BQ1S	ThinkSystem 2.5" 5400 PRO 3.84TB Read Intensive SATA 6Gb HS SSD	Support	40
4XB7A82263	BQ1T	ThinkSystem 2.5" 5400 PRO 7.68TB Read Intensive SATA 6Gb HS SSD	Support	40
4XB7A72438	BM8B	ThinkSystem 2.5" PM893 480GB Read Intensive SATA 6Gb HS SSD	No	40
4XB7A72439	BM8A	ThinkSystem 2.5" PM893 960GB Read Intensive SATA 6Gb HS SSD	No	40
4XB7A72440	BM89	ThinkSystem 2.5" PM893 1.92TB Read Intensive SATA 6Gb HS SSD	No	40
4XB7A72441	BM88	ThinkSystem 2.5" PM893 3.84TB Read Intensive SATA 6Gb HS SSD	No	40
4XB7A72442	BM87	ThinkSystem 2.5" PM893 7.68TB Read Intensive SATA 6Gb HS SSD	No	40
4XB7A17072	B99D	ThinkSystem 2.5" S4520 240GB Read Intensive SATA 6Gb HS SSD	No	40
4XB7A17101	BA7G	ThinkSystem 2.5" S4520 480GB Read Intensive SATA 6Gb HS SSD	No	40
4XB7A17102	BA7H	ThinkSystem 2.5" S4520 960GB Read Intensive SATA 6Gb HS SSD	No	40
4XB7A17103	BA7J	ThinkSystem 2.5" S4520 1.92TB Read Intensive SATA 6Gb HS SSD	No	40
4XB7A17104	BK77	ThinkSystem 2.5" S4520 3.84TB Read Intensive SATA 6Gb HS SSD	No	40
4XB7A17105	BK78	ThinkSystem 2.5" S4520 7.68TB Read Intensive SATA 6Gb HS SSD	No	40

Table 35. 2.5-inch hot-swap PCIe 4.0 NVMe SSDs

Part number	Feature code	Description	SED support	Max Qty
2.5-inch SSDs - U.2 PCIe 4.0 NVMe - Write Intensive/Performance (10+ DWPD)				
4XB7A17158	BKKY	ThinkSystem 2.5" U.2 P5800X 400GB Write Intensive NVMe PCIe 4.0 x4 HS SSD	No	32
4XB7A17159	BKKZ	ThinkSystem 2.5" U.2 P5800X 800GB Write Intensive NVMe PCIe 4.0 x4 HS SSD	No	32
4XB7A17160	BMM8	ThinkSystem 2.5" U.2 P5800X 1.6TB Write Intensive NVMe PCIe 4.0 x4 HS SSD	No	32
2.5-inch SSDs - U.2 PCIe 4.0 NVMe - Mixed Use/Mainstream (3-5 DWPD)				
4XB7A17129	BNEG	ThinkSystem 2.5" U.2 P5620 1.6TB Mixed Use NVMe PCIe 4.0 x4 HS SSD	Support	32
4XB7A17130	BNEH	ThinkSystem 2.5" U.2 P5620 3.2TB Mixed Use NVMe PCIe 4.0 x4 HS SSD	Support	32
4XB7A17133	BNEZ	ThinkSystem 2.5" U.2 P5620 6.4TB Mixed Use NVMe PCIe 4.0 x4 HS SSD	Support	32
4XB7A17136	BA4V	ThinkSystem 2.5" U.2 P5620 12.8TB Mixed Use NVMe PCIe 4.0 x4 HS SSD	Support	32
2.5-inch SSDs - U.3 PCIe 4.0 NVMe - Mixed Use/Mainstream (3-5 DWPD)				
4XB7A79639	BNF1	ThinkSystem 2.5" U.3 7450 MAX 800GB Mixed Use NVMe PCIe 4.0 x4 HS SSD	Support	32
4XB7A13967	BNEJ	ThinkSystem 2.5" U.3 7450 MAX 1.6TB Mixed Use NVMe PCIe 4.0 x4 HS SSD	Support	32
4XB7A13970	BNEY	ThinkSystem 2.5" U.3 7450 MAX 3.2TB Mixed Use NVMe PCIe 4.0 x4 HS SSD	Support	32
4XB7A13971	BNEL	ThinkSystem 2.5" U.3 7450 MAX 6.4TB Mixed Use NVMe PCIe 4.0 x4 HS SSD	Support	32
2.5-inch SSDs - U.2 PCIe 4.0 NVMe - Read Intensive/Entry (<3 DWPD)				
4XB7A13941	BMGD	ThinkSystem 2.5" U.2 P5520 1.92TB Read Intensive NVMe PCIe 4.0 x4 HS SSD	Support	32
4XB7A13942	BMGE	ThinkSystem 2.5" U.2 P5520 3.84TB Read Intensive NVMe PCIe 4.0 x4 HS SSD	Support	32
4XB7A13943	BNEF	ThinkSystem 2.5" U.2 P5520 7.68TB Read Intensive NVMe PCIe 4.0 x4 HS SSD	Support	32
4XB7A13631	BNEQ	ThinkSystem 2.5" U.2 P5520 15.36TB Read Intensive NVMe PCIe 4.0 x4 HS SSD	Support	32
2.5-inch SSDs - U.3 PCIe 4.0 NVMe - Read Intensive/Entry (<3 DWPD)				
4XB7A79646	BNF3	ThinkSystem 2.5" U.3 7450 PRO 960GB Read Intensive NVMe PCIe 4.0 x4 HS SSD	Support	32
4XB7A79647	BNF2	ThinkSystem 2.5" U.3 7450 PRO 1.92TB Read Intensive NVMe PCIe 4.0 x4 HS SSD	Support	32
4XB7A79648	BNF5	ThinkSystem 2.5" U.3 7450 PRO 3.84TB Read Intensive NVMe PCIe 4.0 x4 HS SSD	Support	32
4XB7A79649	BNF4	ThinkSystem 2.5" U.3 7450 PRO 7.68TB Read Intensive NVMe PCIe 4.0 x4 HS SSD	Support	32

Note: NVMe PCIe SSDs support surprise hot removal and hot insertion, provided the operating system supports PCIe SSD hot-swap.

Table 36. 7mm 2.5-inch hot-swap 6 Gb SATA SSDs

Part number	Feature code	Description	SED support	Max Qty
7mm 2.5-inch hot-swap SSDs - 6 Gb SATA - Read Intensive/Entry (<3 DWPD)				
4XB7A82264	BQ1U	ThinkSystem 7mm 5400 PRO 240GB Read Intensive SATA 6Gb HS SSD	Support	2
4XB7A82265	BQ1V	ThinkSystem 7mm 5400 PRO 480GB Read Intensive SATA 6Gb HS SSD	Support	2
4XB7A82266	BQ1W	ThinkSystem 7mm 5400 PRO 960GB Read Intensive SATA 6Gb HS SSD	Support	2
4XB7A82267	BR13	ThinkSystem 7mm 5400 PRO 1.92TB Read Intensive SATA 6Gb HS SSD	Support	2
4XB7A82268	BR12	ThinkSystem 7mm 5400 PRO 3.84TB Read Intensive SATA 6Gb HS SSD	Support	2
4XB7A82269	BR11	ThinkSystem 7mm 5400 PRO 7.68TB Read Intensive SATA 6Gb HS SSD	Support	2
4XB7A17106	BK79	ThinkSystem 7mm S4520 240GB Read Intensive SATA 6Gb HS SSD	No	2
4XB7A17107	BK7A	ThinkSystem 7mm S4520 480GB Read Intensive SATA 6Gb HS SSD	No	2
4XB7A17108	BK7B	ThinkSystem 7mm S4520 960GB Read Intensive SATA 6Gb HS SSD	No	2

Table 37. 7mm 2.5-inch hot-swap PCIe 4.0 NVMe SSDs

Part number	Feature code	Description	SED support	Max Qty
7mm 2.5-inch hot-swap SSDs - PCIe 4.0 NVMe - Read Intensive/Entry (<3 DWPD)				
4XB7A82853	BPZ4	ThinkSystem 7mm U.3 7450 PRO 960GB Read Intensive NVMe PCIe 4.0 x4 HS SSD	Support	2
4XB7A82855	BPZ5	ThinkSystem 7mm U.3 7450 PRO 1.92TB Read Intensive NVMe PCIe 4.0 x4 HS SSD	Support	2
4XB7A82856	BPZ6	ThinkSystem 7mm U.3 7450 PRO 3.84TB Read Intensive NVMe PCIe 4.0 x4 HS SSD	Support	2

Note: NVMe PCIe SSDs support surprise hot removal and hot insertion, provided the operating system supports PCIe SSD hot-swap.

Table 38. 3.5-inch hot-swap 12 Gb SAS HDDs

Part number	Feature code	Description	SED support	Max Qty
3.5-inch hot-swap HDDs - 12 Gb NL SAS				
7XB7A00042	AUU5	ThinkSystem 3.5" 2TB 7.2K SAS 12Gb Hot Swap 512n HDD	No	20
7XB7A00043	AUU6	ThinkSystem 3.5" 4TB 7.2K SAS 12Gb Hot Swap 512n HDD	No	20
7XB7A00044	AUU7	ThinkSystem 3.5" 6TB 7.2K SAS 12Gb Hot Swap 512e HDD	No	20
7XB7A00045	B0YR	ThinkSystem 3.5" 8TB 7.2K SAS 12Gb Hot Swap 512e HDD	No	20
7XB7A00046	AUUG	ThinkSystem 3.5" 10TB 7.2K SAS 12Gb Hot Swap 512e HDD	No	20
7XB7A00067	B117	ThinkSystem 3.5" 12TB 7.2K SAS 12Gb Hot Swap 512e HDD	No	20
4XB7A13906	B496	ThinkSystem 3.5" 14TB 7.2K SAS 12Gb Hot Swap 512e HDD	No	20
4XB7A13911	B7EZ	ThinkSystem 3.5" 16TB 7.2K SAS 12Gb Hot Swap 512e HDD	No	20
4XB7A38266	BCFP	ThinkSystem 3.5" 18TB 7.2K SAS 12Gb Hot Swap 512e HDD	No	20
4XB7A80353	BPKU	ThinkSystem 3.5" 20TB 7.2K SAS 12Gb Hot Swap 512e HDD	No	20
3.5-inch hot-swap SED HDDs - 12 Gb NL SAS				
7XB7A00066	B0YQ	ThinkSystem 3.5" 8TB 7.2K SAS 12Gb Hot Swap 512e HDD FIPS	Support	20

Table 39. 3.5-inch hot-swap 6 Gb SATA HDDs

Part number	Feature code	Description	SED support	Max Qty
3.5-inch hot-swap HDDs - 6 Gb NL SATA				
7XB7A00049	AUUF	ThinkSystem 3.5" 1TB 7.2K SATA 6Gb Hot Swap 512n HDD	No	20
7XB7A00050	AUUD	ThinkSystem 3.5" 2TB 7.2K SATA 6Gb Hot Swap 512n HDD	No	20
7XB7A00051	AUU8	ThinkSystem 3.5" 4TB 7.2K SATA 6Gb Hot Swap 512n HDD	No	20
7XB7A00052	AUUA	ThinkSystem 3.5" 6TB 7.2K SATA 6Gb Hot Swap 512e HDD	No	20
7XB7A00053	AUU9	ThinkSystem 3.5" 8TB 7.2K SATA 6Gb Hot Swap 512e HDD	No	20
7XB7A00054	AUUB	ThinkSystem 3.5" 10TB 7.2K SATA 6Gb Hot Swap 512e HDD	No	20
7XB7A00068	B118	ThinkSystem 3.5" 12TB 7.2K SATA 6Gb Hot Swap 512e HDD	No	20
4XB7A13907	B497	ThinkSystem 3.5" 14TB 7.2K SATA 6Gb Hot Swap 512e HDD	No	20
4XB7A13914	B7F0	ThinkSystem 3.5" 16TB 7.2K SATA 6Gb Hot Swap 512e HDD	No	20
4XB7A38130	BCFH	ThinkSystem 3.5" 18TB 7.2K SATA 6Gb Hot Swap 512e HDD	No	20
4XB7A80354	BPKV	ThinkSystem 3.5" 20TB 7.2K SATA 6Gb Hot Swap 512e HDD	No	20

Table 40. 3.5-inch hot-swap 24 Gb SAS SSDs

Part number	Feature code	Description	SED support	Max Qty
3.5-inch hot-swap SSDs - 24 Gb SAS - Mixed Use/Mainstream (3-5 DWPD)				
4XB7A80344	BNW7	ThinkSystem 3.5" PM1655 800GB Mixed Use SAS 24Gb HS SSD	Support	20
4XB7A80345	BNWA	ThinkSystem 3.5" PM1655 1.6TB Mixed Use SAS 24Gb HS SSD	Support	20
4XB7A80346	BNWB	ThinkSystem 3.5" PM1655 3.2TB Mixed Use SAS 24Gb HS SSD	Support	20
4XB7A80347	BP3G	ThinkSystem 3.5" PM1655 6.4TB Mixed Use SAS 24Gb HS SSD	Support	20
3.5-inch hot-swap SSDs - 24 Gb SAS - Read Intensive/Entry/Capacity (<3 DWPD)				
4XB7A80324	BNWD	ThinkSystem 3.5" PM1653 960GB Read Intensive SAS 24Gb HS SSD	Support	20
4XB7A80325	BNWG	ThinkSystem 3.5" PM1653 1.92TB Read Intensive SAS 24Gb HS SSD	Support	20
4XB7A80326	BNWH	ThinkSystem 3.5" PM1653 3.84TB Read Intensive SAS 24Gb HS SSD	Support	20
4XB7A80327	BP3F	ThinkSystem 3.5" PM1653 7.68TB Read Intensive SAS 24Gb HS SSD	Support	20
4XB7A80328	BP3H	ThinkSystem 3.5" PM1653 15.36TB Read Intensive SAS 24Gb HS SSD	Support	20

Table 41. 3.5-inch hot-swap 6 Gb SATA SSDs

Part number	Feature code	Description	SED support	Max Qty
3.5-inch hot-swap SSDs - 6 Gb SATA - Mixed Use/Mainstream (3-5 DWPD)				
4XB7A17137	BA4W	ThinkSystem 3.5" S4620 480GB Mixed Use SATA 6Gb HS SSD	No	20
4XB7A17138	BA4X	ThinkSystem 3.5" S4620 960GB Mixed Use SATA 6Gb HS SSD	No	20
4XB7A17139	BA4Y	ThinkSystem 3.5" S4620 1.92TB Mixed Use SATA 6Gb HS SSD	No	20
4XB7A17140	BK7P	ThinkSystem 3.5" S4620 3.84TB Mixed Use SATA 6Gb HS SSD	No	20
3.5-inch hot-swap SSDs - 6 Gb SATA - Read Intensive/Entry (<3 DWPD)				
4XB7A17118	BA7K	ThinkSystem 3.5" S4520 240GB Read Intensive SATA 6Gb HS SSD	No	20
4XB7A17119	BA7L	ThinkSystem 3.5" S4520 480GB Read Intensive SATA 6Gb HS SSD	No	20
4XB7A17120	BA7M	ThinkSystem 3.5" S4520 960GB Read Intensive SATA 6Gb HS SSD	No	20
4XB7A17121	BA7N	ThinkSystem 3.5" S4520 1.92TB Read Intensive SATA 6Gb HS SSD	No	20
4XB7A17122	BK7F	ThinkSystem 3.5" S4520 3.84TB Read Intensive SATA 6Gb HS SSD	No	20
4XB7A17123	BK7G	ThinkSystem 3.5" S4520 7.68TB Read Intensive SATA 6Gb HS SSD	No	20

Table 42. 3.5-inch hot-swap PCIe 4.0 NVMe SSDs

Part number	Feature code	Description	SED support	Max Qty
3.5-inch SSDs - U.2 PCIe 4.0 NVMe - Write Intensive/Performance (10+ DWPD)				
4XB7A17161	BMM7	ThinkSystem 3.5" U.2 P5800X 400GB Write Intensive NVMe PCIe 4.0 x4 HS SSD	No	12
4XB7A17162	BMM5	ThinkSystem 3.5" U.2 P5800X 800GB Write Intensive NVMe PCIe 4.0 x4 HS SSD	No	12
4XB7A77070	BMM6	ThinkSystem 3.5" U.2 P5800X 1.6TB Write Intensive NVMe PCIe 4.0 x4 HS SSD	No	12
3.5-inch SSDs - U.2 PCIe 4.0 NVMe - Mixed Use/Mainstream (3-5 DWPD)				
4XB7A17141	BNEK	ThinkSystem 3.5" U.2 P5620 1.6TB Mixed Use NVMe PCIe 4.0 x4 HS SSD	Support	12
4XB7A17143	BNEM	ThinkSystem 3.5" U.2 P5620 3.2TB Mixed Use NVMe PCIe 4.0 x4 HS SSD	Support	12
4XB7A17144	BNEN	ThinkSystem 3.5" U.2 P5620 6.4TB Mixed Use NVMe PCIe 4.0 x4 HS SSD	Support	12
4XB7A17148	BNEP	ThinkSystem 3.5" U.2 P5620 12.8TB Mixed Use NVMe PCIe 4.0 x4 HS SSD	Support	12
3.5-inch SSDs - U.2 PCIe 4.0 NVMe - Read Intensive/Entry (<3 DWPD)				
4XB7A13632	BNES	ThinkSystem 3.5" U.2 P5520 1.92TB Read Intensive NVMe PCIe 4.0 x4 HS SSD	Support	12
4XB7A76777	BNET	ThinkSystem 3.5" U.2 P5520 3.84TB Read Intensive NVMe PCIe 4.0 x4 HS SSD	Support	12
4XB7A76778	BNEU	ThinkSystem 3.5" U.2 P5520 7.68TB Read Intensive NVMe PCIe 4.0 x4 HS SSD	Support	12
4XB7A76779	BNF0	ThinkSystem 3.5" U.2 P5520 15.36TB Read Intensive NVMe PCIe 4.0 x4 HS SSD	Support	12

Note: NVMe PCIe SSDs support surprise hot removal and hot insertion, provided the operating system supports PCIe SSD hot-swap.

Table 43. M.2 SATA drives

Part number	Feature code	Description	SED support	Max Qty
M.2 SSDs - 6 Gb SATA - Read Intensive/Entry (<3 DWPD)				
4XB7A82286	BQ1Z	ThinkSystem M.2 5400 PRO 240GB Read Intensive SATA 6Gb NHS SSD	Support	2
4XB7A82287	BQ1Y	ThinkSystem M.2 5400 PRO 480GB Read Intensive SATA 6Gb NHS SSD	Support	2
4XB7A82288	BQ20	ThinkSystem M.2 5400 PRO 960GB Read Intensive SATA 6Gb NHS SSD	Support	2
7N47A00130	AUUV	ThinkSystem M.2 128GB SATA 6Gbps Non-Hot Swap SSD	No	2

Table 44. M.2 PCIe 4.0 NVMe drives

Part number	Feature code	Description	SED support	Max Qty
M.2 SSDs - PCIe 4.0 NVMe - Read Intensive/Entry (<3 DWPD)				
4XB7A13999	BKSR	ThinkSystem M.2 7450 PRO 960GB Read Intensive NVMe PCIe 4.0 x4 NHS SSD	Support	2

USB memory key

For general portable storage needs, the server also supports the USB memory key option that is listed in the following table.

Table 45. USB memory key

Part number	Feature	Description
4X77A77065	BNWN	ThinkSystem USB 32GB USB 3.0 Flash Drive

Internal backup units

The server does not supports any internal backup units, such as tape drives or RDX drives. External backup units are available as described in the External backup units section.

Optical drives

The server supports the external USB optical drive listed in the following table.

Table 46. External optical drive

Part number	Feature code	Description
7XA7A05926	AVV8	ThinkSystem External USB DVD RW Optical Disk Drive

The drive is based on the Lenovo Slim DVD Burner DB65 drive and supports the following formats: DVD-RAM, DVD-RW, DVD+RW, DVD+R, DVD-R, DVD-ROM, DVD-R DL, CD-RW, CD-R, CD-ROM.

I/O expansion

The server supports a total of up to 10x rear-accessible PCIe slots, plus a dedicated OCP 3.0 SFF slot for networking. Slot availability is based on riser selection. The use of some slots requires that both processors be installed as listed below.

Topics in this section:

- Slot layout and connections
- Ordering information
- Serial port
- Slot field upgrades

Slot layout and connections

The slots are provided by riser cards:

- Riser 1: Slots 1, 2 and 3, all full-height slots (connect to CPU 1)
- Riser 2: Slots 4, 5, and 6, all full-height slots (connect to CPU 2)

- Riser 3: Slot 7 and 8
  - When configured as full-height slots: Slot 7 connects to CPU 1, slot 8 to CPU 2
  - When configured as low-profile slots: Both slots connect to CPU 1
- Riser 4: Slots 9 and 10 (connect to CPU 2)

NVMe support: The use of Riser 3 is mutually exclusive to onboard NVMe support as they use the same PCIe connectors.

The slots in each riser are either PCIe x16 or PCIe x8 depending on the riser card selected as listed in the table below. All x8 slots are open-ended and physically support x16 adapters. Depending on the risers selected, slots are either PCIe 5.0 or PCIe 4.0.

The SR650 V3 also supports front-accessible PCIe slots (planned for 2Q/2023): 2x PCIe 4.0 x16 slots plus a dedicated OCP 3.0 SFF slot for networking. Front-accessible slots are as follows:

- Slot 11: PCIe 4.0 x16 FHHL (connects to CPU 2)
- Slot 12: PCIe 4.0 x16 FHHL (connects to CPU 2)

As discussed in the Internal storage section, the server supports drive bays in the rear of the server. Depending on the drive bays selected, the number of slots available for adapters is reduced. The figure below shows the supported combinations of slots and drive bays.

Internal HBA/RAID adapter: For configurations with 2.5-inch front drive bays, an internal RAID adapter or HBA can be installed in a dedicated space and cabled to a PCIe x8 connector, thereby freeing up a slot for other purposes.

The following figure shows the locations of the rear-accessible slots for each configuration selection. The OCP slot in located in the lower-left corner.

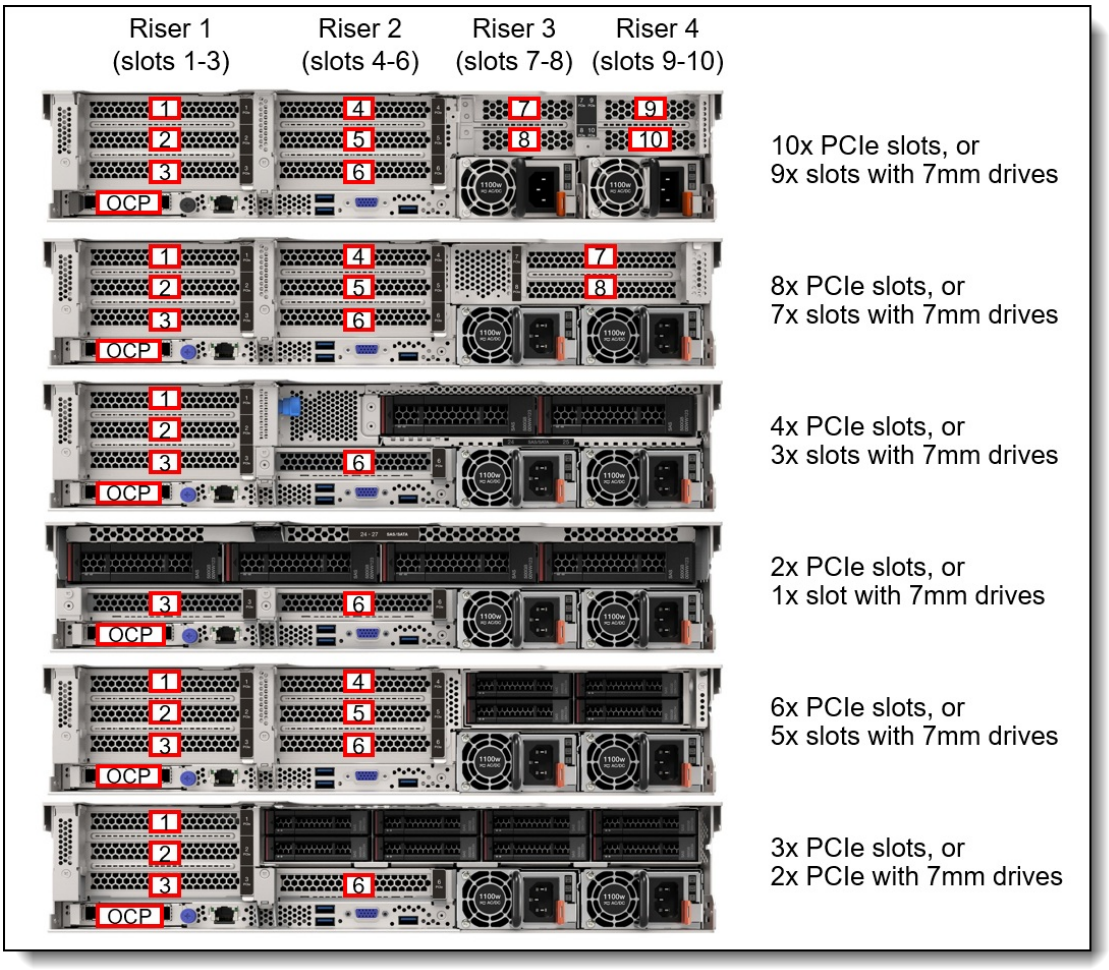

Figure 15. SR650 V3 rear slot configurations

The following figure shows the locations of the front-accessible slots.

Front PCIe slots: Support for front PCIe slots is planned for 2Q/2023.

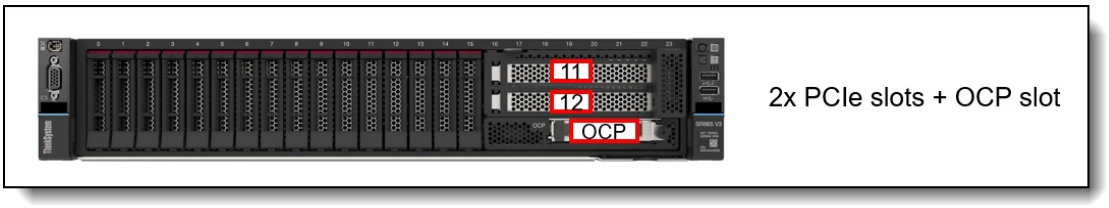

Figure 16. SR650 V3 front slots

Ordering information

The following table lists the riser cards available for CTO builds and for field upgrades.

No slots: It is also possible to build a configuration without any slots, in which case slot fillers will be derived in the configurator. Slots can be added later as field upgrades using option part numbers as listed in the table.

Table 47. Riser cards

Part number	Feature code	Description	Slot configuration* (Green = Gen5, Blue = Gen4)				Purpose
Rear Riser 1 (FH slots)			**Slot 1**	**Slot 2**	**Slot 3**		
4XH7A82898	BPQU	ThinkSystem V3 2U x16/x8/x8 PCIe Gen5 Riser 1 or 2	Gen5 x16	Gen5 x8	Gen5 x8		3 slots PCIe 5.0
4XH7A82896	BLKL	ThinkSystem V3 2U x16/x8/x8 PCIe Gen4 Riser1 or 2	Gen4 x16	Gen4 x8	Gen4 x8		3 slots PCIe 4.0
4XH7A82900	BPQV	ThinkSystem V3 2U x16/x16/E PCIe Gen5 Riser1 or 2	Gen5 x16	Gen5 x16	No slot		2 slots PCIe 5.0; COM port or 7mm drives in slot 3
4XH7A82892	BLKM	ThinkSystem V3 2U x16/x16/E PCIe Gen4 Riser1 or 2	Gen4 x16	Gen4 x16	No slot		2 slots PCIe 4.0; COM port or 7mm drives in slot 3
4XH7A82902	BPQW	ThinkSystem V3 2U E/x16/x16 PCIe Gen5 Riser1 or 2	No slot	Gen5 x16	Gen4 x16		2 slots PCIe 5.0; DW GPU in slot 2
4XH7A82894	BLKN	ThinkSystem V3 2U G4 E/x16/x16 PCIe Riser1 or 2	No slot	Gen4 x16	Gen4 x16		2 slots PCIe 4.0; DW GPU in slot 2
4XH7A82890	BLKP	ThinkSystem V3 2U x16 PCIe Gen4 Riser1 or 2	No slot	No slot	Gen4 x16		1 slot PCIe 4.0; For 4x 3.5-inch rear drives
Rear Riser 2 (FH slots)			**Slot 4**	**Slot 5**	**Slot 6**		
4XH7A82898	BPQU	ThinkSystem V3 2U x16/x8/x8 PCIe Gen5 Riser 1 or 2	Gen5 x16	Gen5 x8	Gen5 x8		3 slots PCIe 5.0
4XH7A82896	BLKL	ThinkSystem V3 2U x16/x8/x8 PCIe Gen4 Riser1 or 2	Gen4 x16	Gen4 x8	Gen4 x8		3 slots PCIe 4.0
4XH7A82900	BPQV	ThinkSystem V3 2U x16/x16/E PCIe Gen5 Riser1 or 2	Gen5 x16	Gen5 x16	No slot		2 slots PCIe 5.0; COM port or 7mm drives in slot 6
4XH7A82892	BLKM	ThinkSystem V3 2U x16/x16/E PCIe Gen4 Riser1 or 2	Gen4 x16	Gen4 x16	No slot		2 slots PCIe 4.0; COM port or 7mm drives in slot 6

Part number	Feature code	Description	Slot configuration* (Green = Gen5, Blue = Gen4)				Purpose
4XH7A82902	BPQW	ThinkSystem V3 2U E/x16/x16 PCIe Gen5 Riser1 or 2	No slot	Gen5 x16	Gen4 x16		2 slots PCIe 5.0; DW GPU in slot 5
4XH7A82894	BLKN	ThinkSystem V3 2U G4 E/x16/x16 PCIe Riser1 or 2	No slot	Gen4 x16	Gen4 x16		2 slots PCIe 4.0; DW GPU in slot 5
4XH7A82890	BLKP	ThinkSystem V3 2U x16 PCIe Gen4 Riser1 or 2	No slot	No slot	Gen4 x16		1 slot PCIe 4.0; For 2x or 4x 3.5-inch rear drives
Rear Riser 3 (2x FH slots)			**Slot 7**	**Slot 8**			
4XH7A82907	BLL9	ThinkSystem V3 2U x16/x16 PCIe Gen5 Riser3 Kit	Gen5 x16	Gen5 x16			2x PCIe 5.0 x16 slots; DW GPU in slot 7
4XH7A82905	BPKG	ThinkSystem V3 2U x16/x16 PCIe Gen4 Riser3 Kit with Cage	Gen4 x16	Gen4 x16			2x PCIe 4.0 x16 slots; DW GPU in slot 7
4XH7A82906	BPKH	ThinkSystem V3 2U x8/x8 PCIe Gen5 Riser3 Kit with Cage	Gen5 x8	Gen5 x8			2x PCIe 5.0 x8 slots
4XH7A82904	BPKF	ThinkSystem V3 2U x8/x8 PCIe Gen4 Riser3 Kit with Cage	Gen4 x8	Gen4 x8			2x PCIe 4.0 x8 slots
Rear Riser 3 & 4 (4x LP slots)			**Slot 7**	**Slot 8**	**Slot 9**	**Slot 10**	
4XH7A86662	BQ2W†	ThinkSystem V3 Rear PCIe Gen5 2x8 w/o Retimer HS Riser	Gen5 x8	Gen5 x8			2x PCIe 5.0 x8 slots
	BTMS†	ThinkSystem V3 2U PCIe Gen5 Riser 3/4 Option Kit			Gen5 x8	Gen4 x8	2x PCIe x8 slots (Gen 5, Gen4)
Front Riser (planned for 2Q/2023)			**Slot 11**	**Slot 12**			
CTO only	BQ2X‡	ThinkSystem V3 Front PCIe Gen4 2x16 Riser	Gen4 x16	Gen4 x16			2x PCIe 4.0 x16 front-accessible slots

* All PCIe x8 slots are open ended and will physically support x16 adapters
† In the configurator, when feature BQ2W is selected, BTMS is automatically derived and provides slots 9 & 10. 4XH7A85888 contains both risers.
‡ Planned for 2Q/2023

Configuration rules:

- For best performance, install PCIe 5.0 adapters in PCIe 5.0 (Gen5) slots
- The server only supports one OCP slot, either in the rear of the server or the front of the server, not both (front OCP slot planned for 2Q/2023)
- If you want to configure 4x low profile slots for slots 7-10, select feature BQ2W which provides riser 3 (slots 7, 8). Feature BTMS will then be automatically derived to provide riser 4 (slots 9 & 10), along with the necessary cables. Option part number 4XH7A85888 contains both of these risers and the cables.
- If you want to add both a 7mm drive enclosure plus 2x PCIe slots above it, you will need to order the 7mm drive option (either 4XH7A85898 or 4XH7A85899) plus the x16/x16/E riser kit (4XH7A82900 for PCIe Gen 5 or 4XH7A82892 for Gen 4). The riser kit part number provides the 2-slot riser card.
- All PCIe x8 slots are open ended and will physically support x16 adapters

Serial port

The SR650 V3 optionally supports a RS-232 serial port by adding a COM port bracket to either slot 3 or slot 6. Ordering information is shown in the following table.

Front PCIe slots: The serial port is not supported in the front PCIe slots

Table 48. Serial port

Part number	Feature code	Description
4X97A82921	BMNJ	ThinkSystem COM Port Upgrade Kit

The bracket is shown in the following figure. The option part number includes both Low Profile and Full Height brackets.

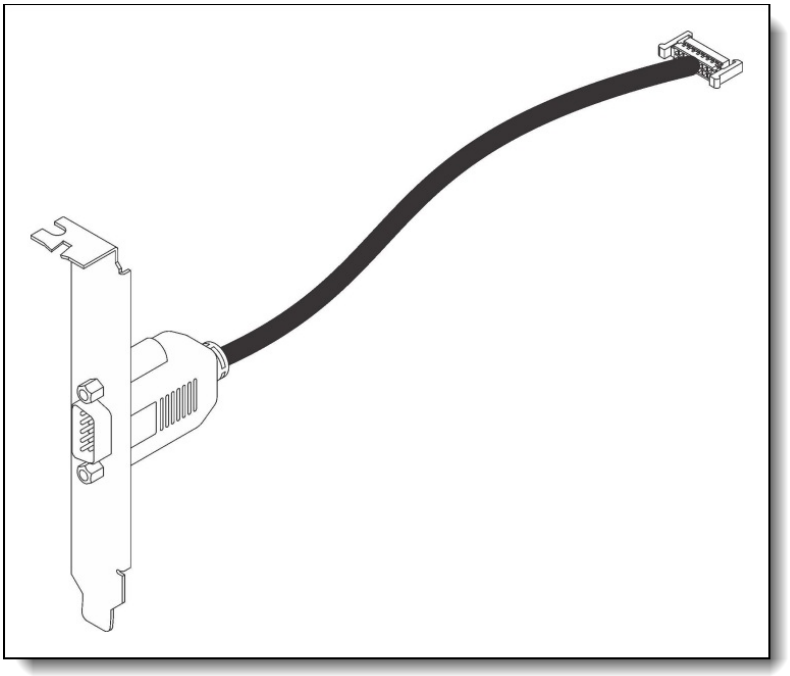

Figure 17. ThinkSystem COM Port Upgrade Kit v2

Slot field upgrades

Slot configurations can also be ordered as field upgrades using option part numbers, as listed in the following table.

Table 49. Slot field upgrades

Part number	Description
Riser 1 and Riser 2 field upgrades - PCIe Gen5	
4XH7A82898	ThinkSystem V3 2U x16/x8/x8 PCIe G5 Riser 1/2 Option Kit
4XH7A82900	ThinkSystem V3 2U x16/x16/E PCIe G5 Riser 1/2 Option Kit
4XH7A82902	ThinkSystem V3 2U E/x16/x16 PCIe G5 Riser 1/2 Option Kit
Riser 1 and Riser 2 field upgrades - PCIe Gen4	
4XH7A82896	ThinkSystem V3 2U x16/x8/x8 PCIe G4 Riser 1/2 Option Kit
4XH7A82892	ThinkSystem V3 2U x16/x16/E PCIe G4 Riser 1/2 Option Kit
4XH7A82894	ThinkSystem V3 2U E/x16/x16 PCIe G4 Riser 1/2 Option Kit
4XH7A82890	ThinkSystem V3 2U x16 PCIe G4 Riser 1/2 Option Kit
Riser 3 and 4 field upgrades - PCIe Gen5	
4XH7A82906	ThinkSystem SR650 V3 x8/x8 PCIe Gen5 Riser3 Option Kit
4XH7A82907	ThinkSystem SR650 V3 x16/x16 PCIe Gen5 Riser3 Option Kit
4XH7A86662	ThinkSystem V3 2U PCIe Gen5 Riser 3/4 Option Kit
4XH7A87511	ThinkSystem Single Processor SR650 V3 x8/x8 PCIe Gen4 Riser3 Kit (To support Riser 3 when only 1 processor is installed)
4X97A82946	ThinkSystem 2nd Processor Upgrade SR650 V3 PCIe Gen5 Riser3 Cable Kit (For use when adding a second processor to the server; replaces existing Riser 3 cabling)
Riser 3 and 4 field upgrades - PCIe Gen4	
4XH7A82904	ThinkSystem SR650 V3 x8/x8 PCIe Gen4 Riser3 Option Kit
4XH7A82905	ThinkSystem SR650 V3 x16/x16 PCIe Gen4 Riser3 Option Kit
4XH7A87512	ThinkSystem Single Processor SR650 V3 x8/x8 PCIe Gen5 Riser3 Kit (To support Riser 3 when only 1 processor is installed)
4X97A82944	ThinkSystem 2nd Processor Upgrade SR650 V3 PCIe Gen4 Riser3 Cable Kit (For use when adding a second processor to the server; replaces existing Riser 3 cabling)

Network adapters

The server has a dedicated OCP 3.0 SFF slot with PCIe 5.0 x16 host interface. See Figure 3 for the locatior of the OCP slot.

The following table lists the supported OCP adapters. One port can optionally be shared with the XCC management processor for Wake-on-LAN and NC-SI support. Only 1 OCP card can be installed in the server, either rear-accessible or front-accessible.

Table 50. Supported OCP adapters

Part number	Feature code	Description	Maximum supported
Gigabit Ethernet			
4XC7A08235	B5T1	ThinkSystem Broadcom 5719 1GbE RJ45 4-port OCP Ethernet Adapter	1
4XC7A08277	B93E	ThinkSystem Intel I350 1GbE RJ45 4-port OCP Ethernet Adapter	1
10 Gb Ethernet - 10GBASE-T			
4XC7A08236	B5ST	ThinkSystem Broadcom 57416 10GBASE-T 2-port OCP Ethernet Adapter	1
4XC7A08240	B5T4	ThinkSystem Broadcom 57454 10GBASE-T 4-port OCP Ethernet Adapter	1
4XC7A08278	BCD5	ThinkSystem Intel X710-T2L 10GBASE-T 2-port OCP Ethernet Adapter	1
4XC7A80268	BPPY	ThinkSystem Intel X710-T4L 10GBase-T 4-Port OCP Ethernet Adapter	1
25 Gb Ethernet			
4XC7A08237	BN2T	ThinkSystem Broadcom 57414 10/25GbE SFP28 2-Port OCP Ethernet Adapter	1
4XC7A80567	BPPW	ThinkSystem Broadcom 57504 10/25GbE SFP28 4-Port OCP Ethernet Adapter	1
4XC7A08294	BCD4	ThinkSystem Intel E810-DA2 10/25GbE SFP28 2-Port OCP Ethernet Adapter	1
4XC7A80269	BP8L	ThinkSystem Intel E810-DA4 10/25GbE SFP28 4-Port OCP Ethernet Adapter	1
4XC7A62582	BE4T	ThinkSystem Mellanox ConnectX-6 Lx 10/25GbE SFP28 2-Port OCP Ethernet Adapter	1
100 Gb Ethernet			
4XC7A08243	BPPX	ThinkSystem Broadcom 57508 100GbE QSFP56 2-Port OCP Ethernet Adapter	1

The following table lists additional supported network adapters that can be installed in the regular PCIe slots.

Table 51. Supported PCIe Network Adapters

Part number	Feature	Description	Max Qty	Slots supported	PCIe lanes
Gigabit Ethernet					
7ZT7A00484	AUZV	ThinkSystem Broadcom 5719 1GbE RJ45 4-Port PCIe Ethernet Adapter	8	1 - 10	x8
7ZT7A00535	AUZW	ThinkSystem I350-T4 PCIe 1Gb 4-Port RJ45 Ethernet Adapter	8	1 - 10	x4
10 Gb Ethernet - 10GBASE-T					
7ZT7A00496	AUKP	ThinkSystem Broadcom 57416 10GBASE-T 2-Port PCIe Ethernet Adapter	8	1 - 10	x8
4XC7A08245	B5SU	ThinkSystem Broadcom 57454 10GBASE-T 4-port PCIe Ethernet Adapter	8	1 - 10	x8
4XC7A80266	BNWL	ThinkSystem Intel X710-T2L 10GBase-T 2-Port PCIe Ethernet Adapter	8	1 - 10	x8
4XC7A79699	BMXB	ThinkSystem Intel X710-T4L 10GBase-T 4-Port PCIe Ethernet Adapter	8	1 - 10	x8
25 Gb Ethernet					
4XC7A08238	BK1H	ThinkSystem Broadcom 57414 10/25GbE SFP28 2-port PCIe Ethernet Adapter	8	1 - 10	x8
4XC7A80566	BNWM	ThinkSystem Broadcom 57504 10/25GbE SFP28 4-Port PCIe Ethernet Adapter	6	1,2,4,5,7,8	x16
4XC7A08295	BCD6	ThinkSystem Intel E810-DA2 10/25GbE SFP28 2-Port PCIe Ethernet Adapter	8	1 - 10	x8
4XC7A80267	BP8M	ThinkSystem Intel E810-DA4 10/25GbE SFP28 4-Port PCIe Ethernet Adapter	6	1,2,4,5,7,8	x16
4XC7A62580	BE4U	ThinkSystem Mellanox ConnectX-6 Lx 10/25GbE SFP28 2-Port PCIe Ethernet Adapter	8	1 - 10	x8
100 Gb Ethernet					
4XC7A08297	BK1J	ThinkSystem Broadcom 57508 100GbE QSFP56 2-port PCIe 4 Ethernet Adapter	6	1,2,4,5,7,8	x16
4XC7A08248	B8PP	ThinkSystem Mellanox ConnectX-6 Dx 100GbE QSFP56 2-port PCIe Ethernet Adapter	6	1,2,4,5,7,8	x16
HDR100 InfiniBand (100 GbE)					
4C57A14177	B4R9	ThinkSystem Mellanox ConnectX-6 HDR100/100GbE QSFP56 1-port PCIe VPI Adapter	6	1,2,4,5,7,8	x16
4C57A14178	B4RA	ThinkSystem Mellanox ConnectX-6 HDR100/100GbE QSFP56 2-port PCIe VPI Adapter	6	1,2,4,5,7,8	x16
HDR and NDR200 InfiniBand (200 GbE)					
4C57A15326	B4RC	ThinkSystem Mellanox ConnectX-6 HDR/200GbE QSFP56 1-port PCIe 4 VPI Adapter	6	1,2,4,5,7,8	x16
4XC7A81883	BQBN	ThinkSystem Nvidia ConnectX-7 NDR200/HDR QSFP112 2-Port PCIe Gen5 x16 InfiniBand Adapter	6	1,2,4,5,7,8	x16
NDR InfiniBand (400 GbE)					
4XC7A80289	BQ1N	ThinkSystem NVIDIA ConnectX-7 NDR400 OSFP 1-Port PCIe Gen5 Adapter	6	1,2,4,5,7,8	x16

For more information, including the transceivers and cables that each adapter supports, see the list of Lenovo Press Product Guides in the Networking adapters category:
https://lenovopress.com/servers/options/ethernet

Configuration requirements:

- Adapters with a x16 host interface require a x16 slot to maximize performance
- PCIe Gen5 adapters will require a Gen5 riser to maximize performance
- **E810 Ethernet and X350 RAID/HBAs**: The use of both an Intel E810 network adapter and an X350 HBA/RAID adapter (9350, 5350 and 4350) is currently not supported in ThinkSystem servers. For details see Support Tip HT513226. Planned support for this combination of adapters is 2Q/2023 (23A).

Fibre Channel host bus adapters

The following table lists the Fibre Channel HBAs supported by the SR650 V3.

Table 52. Fibre Channel HBAs

Part number	Feature code	Description	Max qty	Slots supported	PCIe lanes
64 Gb Fibre Channel HBAs					
4XC7A77485	BLC1	ThinkSystem Emulex LPe36002 64Gb 2-port PCIe Fibre Channel Adapter	10	All slots	Gen4 x8
32 Gb Fibre Channel HBAs					
4XC7A76498	BJ3G	ThinkSystem Emulex LPe35000 32Gb 1-port PCIe Fibre Channel Adapter v2	10	All slots	Gen4 x8
4XC7A76525	BJ3H	ThinkSystem Emulex LPe35002 32Gb 2-port PCIe Fibre Channel Adapter v2	10	All slots	Gen4 x8
4XC7A08279	BA1G	ThinkSystem QLogic QLE2770 32Gb 1-Port PCIe Fibre Channel Adapter	10	All slots	Gen4 x8
4XC7A08276	BA1F	ThinkSystem QLogic QLE2772 32Gb 2-Port PCIe Fibre Channel Adapter	10	All slots	Gen4 x8
16 Gb Fibre Channel HBAs					
01CV840	ATZV	Emulex 16Gb Gen6 FC Dual-port HBA	10	All slots	Gen3 x8
01CV830	ATZU	Emulex 16Gb Gen6 FC Single-port HBA	10	All slots	Gen3 x8
01CV760	ATZC	QLogic 16Gb Enhanced Gen5 FC Dual-port HBA	10	All slots	Gen3 x8
01CV750	ATZB	QLogic 16Gb Enhanced Gen5 FC Single-port HBA	10	All slots	Gen3 x8

For more information, see the list of Lenovo Press Product Guides in the Host bus adapters category:
https://lenovopress.com/servers/options/hba

SAS adapters for external storage

The following table lists SAS HBAs and RAID adapters supported by SR650 V3 server for use with external storage.

Table 53. Adapters for external storage

Part number	Feature code	Description	PCIe lanes	Max qty	Slots supported
SAS HBAs					
4Y37A78837	BNWK	ThinkSystem 440-8e SAS/SATA PCIe Gen4 12Gb HBA	Gen4 x8	8	1 - 10
4Y37A09724	B8P7	ThinkSystem 440-16e SAS/SATA PCIe Gen4 12Gb HBA	Gen4 x8	8	1 - 10
External RAID adapters					
4Y37A78836	BNWJ	ThinkSystem RAID 940-8e 4GB Flash PCIe Gen4 12Gb Adapter	Gen4 x8	4*	1 - 10

* See below regarding supercap requirements

For a comparison of the functions of the supported storage adapters, see the ThinkSystem RAID Adapter and HBA Reference:
https://lenovopress.lenovo.com/lp1288#sr650-v3-support=SR650%2520V3&internal-or-external-ports=External

The RAID 940-8e adapter uses a flash power module (supercap), which can be installed in one of up to 4 locations in the server depending on the server configuration. See the RAID flash power module (supercap) support section for details. The number of 940-8e RAID adapters supported is based on how many supercaps can be installed in the server. If an internal RAID adapter with flash power modules is installed, the maximum number of 940-8e adapters supported is reduced by 1.

For more information, see the list of Lenovo Press Product Guides in the Host bus adapters and RAID adapters categories:

https://lenovopress.com/servers/options/hba
https://lenovopress.com/servers/options/raid

Flash storage adapters

The SR650 V3 currently does not support PCIe Flash Storage adapters.

GPU adapters

This section describes the supported GPUs.

- GPU part numbers
- Riser selections for double-wide GPUs
- GPU Enablement Kit
- GPU cable kits

GPU part numbers

The SR650 V3 supports the following graphics processing units (GPUs).

Table 54. Supported GPUs

Part number	Feature code	Description	Max.	Slots supported	PCIe width	TDP	Aux power
Single-wide GPUs							
4X67A81547	BP05	ThinkSystem NVIDIA A2 16GB PCIe Gen4 Passive GPU	8	1 - 8	x8	60W	No
CTO only	BQZT	ThinkSystem NVIDIA A2 16GB PCIe Gen4 Passive GPU w/o CEC	8	1 - 8	x8	60W	No
4X67A79777	BMXD	ThinkSystem NVIDIA T1000 8GB PCIe Active GPU	6	1 - 8	x16	50 W	No
4X67A79778	BMXE	ThinkSystem NVIDIA T400 4GB PCIe Active GPU	6	1 - 8	x16	30 W	No
Double-wide GPUs							
4X67A82257	BR9U	ThinkSystem NVIDIA H100 80GB PCIe Gen5 Passive GPU	3	2,5,7*	x16	350W	Yes
4X67A76715	BLK1	ThinkSystem NVIDIA A100 80GB PCIe Gen4 Passive GPU	3	2,5,7*	x16	300W	Yes
CTO only	BQZP	ThinkSystem NVIDIA A100 80GB PCIe Gen4 Passive GPU w/o CEC	3	2,5,7*	x16	300W	Yes
4X67A72593	BQZQ	ThinkSystem NVIDIA A40 48GB PCIe Gen4 Passive GPU w/o CEC	3	2,5,7*	x16	300W	Yes
4X67A76581	BJHG	ThinkSystem NVIDIA A30 24GB PCIe Gen4 Passive GPU	3	2,5,7*	x16	165W	Yes
CTO only	BQZR	ThinkSystem NVIDIA A30 24GB PCIe Gen4 Passive GPU w/o CEC	3	2,5,7*	x16	165W	Yes
4X67A76727	BNFE	ThinkSystem NVIDIA A16 64GB Gen4 PCIe Passive GPU	3	2,5,7*	x16	300W	Yes
CTO only	BQZU	ThinkSystem NVIDIA A16 64GB Gen4 PCIe Passive GPU w/o CEC	3	2,5,7*	x16	300W	Yes
4X67A71310	BFT0	ThinkSystem NVIDIA RTX A6000 48GB PCIe Active GPU	3	2,5,7*	x16	300W	Yes
4X67A76726	BNFD	ThinkSystem NVIDIA RTX A4500 20GB PCIe Active GPU	3	2,5,7*	x16	200W	Yes
4X67A76720	BMT9	ThinkSystem NVIDIA RTX A2000 12GB PCIe Active GPU	3	2,5,7*	x16	70W	No

* When a double-wide GPU is installed in slot 2, 5 or 7, the adjacent slot 1, 4 and 8 respectively is not available

For information about these GPUs, see the ThinkSystem GPU Summary, available at: https://lenovopress.com/lp0768-thinksystem-thinkagile-gpu-summary

Configuration rules

The following configuration requirements must be met when installing GPUs:

- Some NVIDIA A Series GPUs are available as two feature codes, one with a CEC chip and one without a CEC chip (ones without the CEC chip have "w/o CEC" in the name). The CEC is a secondary Hardware Root of Trust (RoT) module that provides an additional layer of security, which can be used by customers who have high regulatory requirements or high security standards. NVIDIA uses a multi-layered security model and hence the protection offered by the primary Root of Trust embedded in the GPU is expected to be sufficient for most customers. The CEC defeatured products

still offer Secure Boot, Secure Firmware Update, Firmware Rollback Protection, and In-Band Firmware Update Disable. Specifically, without the CEC chip, the GPU does not support Key Revocation, and Firmware Attestation. CEC and non-CEC GPUs of the same type of GPU can be mixed in field upgrades.

- All GPUs installed must be identical
- When a double-wide GPU is installed in slot 2, 5 or 7, the adjacent slot 1, 4 and 8 respectively is not available
- Flash storage adapters are not supported.
- Middle drive bays and Rear drive bays are not supported
- The following GPUs are not supported with PCIe Gen 5 risers:
  - ThinkSystem NVIDIA T1000 8GB PCIe Active GPU
  - ThinkSystem NVIDIA T400 4GB PCIe Active GPU

Riser selections for double-wide GPUs

When a double-wide GPU is installed in slot 2, 5 or 7, the adjacent slot 1, 4 and 8 respectively is not available. The riser cards listed in the following table are used with double-wide GPUs.

Table 55. Risers needed for double-wide GPUs

Riser	Part number	Feature code	Description
Riser 1 (GPU in slot 2) - PCIe Gen5	4XH7A82902	BPQW	ThinkSystem V3 2U E/x16/x16 PCIe Gen5 Riser1 or 2
Riser 1 (GPU in slot 2) - PCIe Gen4	4XH7A82894	BLKN	ThinkSystem V3 2U G4 E/x16/x16 PCIe Riser1 or 2
Riser 2 (GPU in slot 5) - PCIe Gen5	4XH7A82902	BPQW	ThinkSystem V3 2U E/x16/x16 PCIe Gen5 Riser1 or 2
Riser 2 (GPU in slot 5) - PCIe Gen4	4XH7A82894	BLKN	ThinkSystem V3 2U G4 E/x16/x16 PCIe Riser1 or 2
Riser 3 (GPU in slot 7) - PCIe Gen5	4XH7A85887	BLL9	ThinkSystem V3 2U x16/x16 PCIe Gen5 Riser3 Kit
Riser 3 (GPU in slot 7) - PCIe Gen4	4XH7A85885	BPKG	ThinkSystem V3 2U x16/x16 PCIe Gen4 Riser3 Kit with Cage

GPU Enablement Kit

When installing any full-length GPU as a field upgrade, you will also need to order the GPU Enablement Kit as listed in the following table. This kit is not required for the NVIDIA A2 GPU.

Table 56. ThinkSystem SR665 V3 GPU Full Length Thermal Option Kit

Part number	Description	Maximum supported
4X67A82883	ThinkSystem SR650 V3 GPU Full Length Thermal Option Kit • 2x 1U processor performance heatsinks - replace existing 2U heatsinks (SBB7A53929) • 1x ThinkSystem 2U GPU air duct - replaces main air baffle (SBB7A43701) • 3x GPU extend air ducts - needed in a zone if an A10 or other single-wide GPU > 75W is installed in the upper slot (SBB7A43702) • 3x Air duct fillers - needed in each riser zone if no GPU is installed in that zone (SBB7A17338) • 3x GPU power cables for double-wide GPUs (SBB7A49792) • 3x GPU power cables for single-wide GPUs (SBB7A44786) • 3x GPU power Y-cables when 2x single-wide GPUs installed on one riser (SBB7A23757)	1

The following figure shows the GPU air duct with GPU air duct fillers and GPU extend air ducts installed.

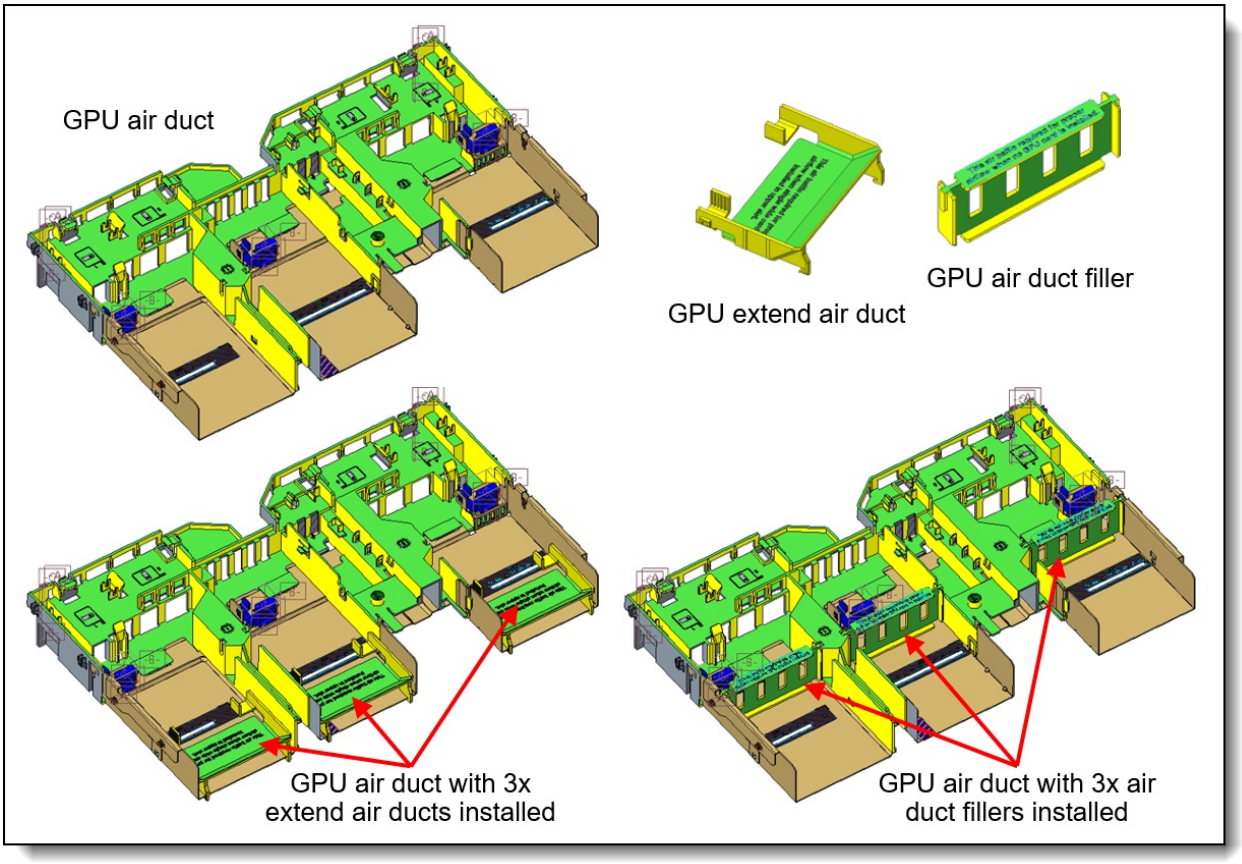

Figure 18. SR650 V3 GPU air duct

GPU cable kits

The following cable kits are offered to provide auxiliary power cables for GPUs that require one. See the GPU part numbers section to see which GPUs require an auxiliary power cable.

Configuration notes:

- This cable kits are only required for field upgrades; factory (CTO) orders will automatically include any required cables.
- For double-wide GPUs, The DW (double-wide) cable kit is only required if you are adding *additional* double-wide GPUs to a server that already has a DW GPU installed from a CTO order. If you are doing a field upgrade to install the *first* DW GPU to a server, order the ThinkSystem SR650 V3 GPU Full Length Thermal Option Kit, 4X67A82883 instead, since the Enablement Kit includes the necessary power cables.

Table 57. GPU cable kits

Part number	Description
4X97A82948	ThinkSystem SR650 V3 DW GPU Cable Kit • 3x GPU power cables for double-wide GPUs (SBB7A49792) • 3x GPU power cables for single-wide GPUs (SBB7A44786) • 3x GPU power Y-cables when 2x single-wide GPUs installed on one riser (SBB7A23757)

Cooling

The SR650 V3 server has up to six 60 mm hot-swap fans. Five fans are needed when one processor is installed and six fans are required when two processors are installed. The server offers N+1 redundancy. The server also has one or two additional fans integrated in each of the two power supplies.

Depending on the configuration, the server will need either Standard fans (single-rotor 17K RPM) or Performance fans (dual-rotor 21K RPM).

Under the following conditions, Standard fans can be used:

- Processor TDP < 270W
- No GPUs
- No 256GB 3DS RDIMMs
- No mid-chassis or rear drive backplanes
- None of the following network adapters:
  - Any 100Gb, 200Gb or 400Gb adapter
  - ThinkSystem Broadcom 57454 10GBASE-T 4-port OCP Ethernet Adapter
  - ThinkSystem Broadcom 57416 10GBASE-T 2-port OCP Ethernet Adapter
- Not the following configuration:
  - 12x 3.5-inch front drive bays with an OCP adapter installed

If any conditions are not met, Performance fans are required.

Ordering information for the fans is listed in the following table.

Table 58. Fan ordering information

Part number	Feature code	Description	Quantity required
4F17A14497	BH8F	ThinkSystem V2/V3 2U Standard Fan option Kit	1x CPU: 5 2x CPUs: 6
4F17A82884	BLL6	ThinkSystem V3 2U Performance Fan Option Kit	1x CPU: 5 2x CPUs: 6

Power supplies

The SR650 V3 supports up to two redundant hot-swap power supplies.

The power supply choices are listed in the following table. Both power supplies used in server must be identical.

Tip: When configuring a server in the DCSC configurator, power consumption is calculated precisely by interfacing with Lenovo Capacity Planner. You can therefore select the appropriate power supply for your configuration. However, do consider future upgrades that may require additional power needs.

Table 59. Power supply options

Part number	Feature code	Description	Connector	Max quantity	110V AC	220V AC	240V DC PRC only	-48V DC
AC input power - 80 PLUS Titanium efficiency								
4P57A82019	BR1X	ThinkSystem 750W 230V Titanium Hot-Swap Gen2 Power Supply v3	C13	2	No	Yes	Yes	No
4P57A72666	BLKH	ThinkSystem 1100W 230V Titanium Hot-Swap Gen2 Power Supply	C13	2	No	Yes	Yes	No
4P57A78359	BPK9	ThinkSystem 1800W 230V Titanium Hot-Swap Gen2 Power Supply	C13	2	No	Yes	Yes	No
4P57A72667	BKTJ	ThinkSystem 2600W 230V Titanium Hot-Swap Gen2 Power Supply	C19	2	No	Yes	Yes	No
AC input power - 80 PLUS Platinum efficiency								
4P57A72670	BNFG	ThinkSystem 750W 230V/115V Platinum Hot-Swap Gen2 Power Supply v3	C13	2	Yes	Yes	Yes	No
4P57A72671	BNFH	ThinkSystem 1100W 230V/115V Platinum Hot-Swap Gen2 Power Supply v3	C13	2	Yes	Yes	Yes	No
4P57A26294	BMUF	ThinkSystem V2 1800W (230V) Platinum Hot-Swap Power Supply v2	C13	2	No	Yes	Yes	No
4P57A26295	B962	ThinkSystem 2400W 230V Platinum Hot-Swap Gen2 Power Supply	C19	2	No	Yes	Yes	No
-48V DC input power								
4P57A26296	B8QE	ThinkSystem 1100W -48V DC Hot-Swap Gen2 Power Supply	DC	2	No	No	No	Yes

Supported power supplies are auto-sensing dual-voltage units, supporting both 110V AC (100-127V 50/60 Hz) and 220V AC (200-240V 50/60 Hz) power. For China customers, all power supplies support 240V DC.

AC power supplies up to 1800W have a C14 connector. AC power supplies 2400W and above have a C19 connector.

The supported -48V DC power supply has a Weidmuller TOP 4GS/3 7.6 terminal as shown in the following figure.



Figure 19. Connector on the ThinkSystem 1100W -48V DC Hot-Swap Gen2 Power Supply

Power supply options do not include a line cord. For server configurations, the inclusion of a power cord is model dependent. Configure-to-order models can be configured without power cords if desired.

The supported hot-swap power supplies have the following LEDs:

- Power input LED:
  - Green: The power supply is connected to the AC power source
  - Off: The power supply is disconnected from the AC power source or a power problem has occurred
- Power output LED:
  - Green: The server is on and the power supply is working normally
  - Blinking green: The power supply is in Standby mode (see below)
  - Off: The server is powered off, or the power supply is not working properly
- Power supply error LED:
  - Off: The power supply is working normally
  - Yellow: The power supply has failed

Standby mode: When Standby mode (also known as zero-output mode) is configured in System Setup and the server power load is sufficiently low, one of the installed power supplies enters into the Standby state while the other one delivers entire load. When the power load increases, the standby power supply will switch to Active state to provide sufficient power to the server. Standby mode can be enabled or disabled in System Setup (F1 at boot time) via System Settings > Power > Zero Output and select either Enable or Disable. If you select Disable, then both power supplies will be in the Active state.

Power cords

Line cords and rack power cables with C13 connectors can be ordered as listed in the following table.

110V customers: If you plan to use the 1100W power supply with a 110V power source, select a power cable that is rated above 10A. Power cables that are rated at 10A or below are not supported with 110V power.

Table 60. Power cords

Part number	Feature code	Description
Rack cables - C13 to C14		
SL67B08593	BPHZ	0.5m, 10A/100-250V, C13 to C14 Jumper Cord
00Y3043	A4VP	1.0m, 10A/100-250V, C13 to IEC 320-C14 Rack Power Cable
4L67A08367	B0N5	1.0m, 13A/100-250V, C13 to C14 Jumper Cord
39Y7937	6201	1.5m, 10A/100-250V, C13 to IEC 320-C14 Rack Power Cable
4L67A08368	B0N6	1.5m, 13A/100-250V, C13 to C14 Jumper Cord
4L67A08365	B0N4	2.0m, 10A/100-250V, C13 to IEC 320-C14 Rack Power Cable
4L67A08369	6570	2.0m, 13A/100-250V, C13 to C14 Jumper Cord
4L67A08366	6311	2.8m, 10A/100-250V, C13 to IEC 320-C14 Rack Power Cable
4L67A08370	6400	2.8m, 13A/100-250V, C13 to C14 Jumper Cord
39Y7932	6263	4.3m, 10A/100-250V, C13 to IEC 320-C14 Rack Power Cable
4L67A08371	6583	4.3m, 13A/100-250V, C13 to C14 Rack Power Cable
Rack cables - C13 to C14 (Y-cable)		
00Y3046	A4VQ	1.345m, 2X C13 to C14 Jumper Cord, Rack Power Cable
00Y3047	A4VR	2.054m, 2X C13 to C14 Jumper Cord, Rack Power Cable
Rack cables - C13 to C20		
39Y7938	6204	2.8m, 10A/100-250V, C13 to IEC 320-C20 Rack Power Cable
Rack cables - C13 to C20 (Y-cable)		
47C2491	A3SW	1.2m, 16A/100-250V, 2 Short C13s to Short C20 Rack Power Cable
47C2492	A3SX	2.5m, 16A/100-250V, 2 Long C13s to Short C20 Rack Power Cable
47C2493	A3SY	2.8m, 16A/100-250V, 2 Short C13s to Long C20 Rack Power Cable
47C2494	A3SZ	4.1m, 16A/100-250V, 2 Long C13s to Long C20 Rack Power Cable
Line cords		
39Y7930	6222	2.8m, 10A/250V, C13 to IRAM 2073 (Argentina) Line Cord
81Y2384	6492	4.3m 10A/220V, C13 to IRAM 2073 (Argentina) Line Cord
39Y7924	6211	2.8m, 10A/250V, C13 to AS/NZ 3112 (Australia/NZ) Line Cord
81Y2383	6574	4.3m, 10A/230V, C13 to AS/NZS 3112 (Aus/NZ) Line Cord
69Y1988	6532	2.8m, 10A/250V, C13 to NBR 14136 (Brazil) Line Cord
81Y2387	6404	4.3m, 10A/250V, C13 - 2P+Gnd (Brazil) Line Cord
39Y7928	6210	2.8m, 220-240V, C13 to GB 2099.1 (China) Line Cord
81Y2378	6580	4.3m, 10A/220V, C13 to GB 2099.1 (China) Line Cord
39Y7918	6213	2.8m, 10A/250V, C13 to DK2-5a (Denmark) Line Cord
81Y2382	6575	4.3m, 10A/230V, C13 to DK2-5a (Denmark) Line Cord
39Y7917	6212	2.8m, 10A/230V, C13 to CEE7-VII (Europe) Line Cord
81Y2376	6572	4.3m, 10A/230V, C13 to CEE7-VII (Europe) Line Cord
39Y7927	6269	2.8m, 10A/250V, C13(2P+Gnd) (India) Line Cord
81Y2386	6567	4.3m, 10A/240V, C13 to IS 6538 (India) Line Cord
39Y7920	6218	2.8m, 10A/250V, C13 to SI 32 (Israel) Line Cord
81Y2381	6579	4.3m, 10A/230V, C13 to SI 32 (Israel) Line Cord
39Y7921	6217	2.8m, 220-240V, C13 to CEI 23-16 (Italy/Chile) Line Cord

Part number	Feature code	Description
81Y2380	6493	4.3m, 10A/230V, C13 to CEI 23-16 (Italy/Chile) Line Cord
4L67A08362	6495	4.3m, 12A/200V, C13 to JIS C-8303 (Japan) Line Cord
39Y7922	6214	2.8m, 10A/250V, C13 to SABS 164 (S Africa) Line Cord
81Y2379	6576	4.3m, 10A/230V, C13 to SABS 164 (South Africa) Line Cord
39Y7926	6335	4.3m, 12A/100V, C13 to JIS C-8303 (Japan) Line Cord
39Y7925	6219	2.8m, 220-240V, C13 to KETI (S Korea) Line Cord
81Y2385	6494	4.3m, 12A/220V, C13 to KSC 8305 (S. Korea) Line Cord
39Y7919	6216	2.8m, 10A/250V, C13 to SEV 1011-S24507 (Swiss) Line Cord
81Y2390	6578	4.3m, 10A/230V, C13 to SEV 1011-S24507 (Sws) Line Cord
23R7158	6386	2.8m, 10A/125V, C13 to CNS 10917-3 (Taiwan) Line Cord
81Y2375	6317	2.8m, 10A/240V, C13 to CNS 10917-3 (Taiwan) Line Cord
81Y2374	6402	2.8m, 13A/125V, C13 to CNS 60799 (Taiwan) Line Cord
4L67A08363	AX8B	4.3m, 10A 125V, C13 to CNS 10917 (Taiwan) Line Cord
81Y2389	6531	4.3m, 10A/250V, C13 to 76 CNS 10917-3 (Taiwan) Line Cord
81Y2388	6530	4.3m, 13A/125V, C13 to CNS 10917 (Taiwan) Line Cord
39Y7923	6215	2.8m, 10A/250V, C13 to BS 1363/A (UK) Line Cord
81Y2377	6577	4.3m, 10A/230V, C13 to BS 1363/A (UK) Line Cord
90Y3016	6313	2.8m, 10A/120V, C13 to NEMA 5-15P (US) Line Cord
46M2592	A1RF	2.8m, 10A/250V, C13 to NEMA 6-15P Line Cord
00WH545	6401	2.8m, 13A/120V, C13 to NEMA 5-15P (US) Line Cord
4L67A08359	6370	4.3m, 10A/125V, C13 to NEMA 5-15P (US) Line Cord
4L67A08361	6373	4.3m, 10A/250V, C13 to NEMA 6-15P (US) Line Cord
4L67A08360	AX8A	4.3m, 13A/120V, C13 to NEMA 5-15P (US) Line Cord

Power cords (C19 connectors)

Line cords and rack power cables with C19 connectors can be ordered as listed in the following table.

Table 61. Power cords (C19 connectors)

Part number	Feature code	Description
Rack cables		
4L67A86677	BPJ0	0.5m, 16A/100-250V, C19 to IEC 320-C20 Rack Power Cable
4L67A86678	B4L0	1.0m, 16A/100-250V, C19 to IEC 320-C20 Rack Power Cable
4L67A86679	B4L1	1.5m, 16A/100-250V, C19 to IEC 320-C20 Rack Power Cable
4L67A86680	B4L2	2.0m, 16A/100-250V, C19 to IEC 320-C20 Rack Power Cable
39Y7916	6252	2.5m, 16A/100-240V, C19 to IEC 320-C20 Rack Power Cable
4L67A86681	B4L3	4.3m, 16A/100-250V, C19 to IEC 320-C20 Rack Power Cable
Line cords		
40K9777	6276	4.3m, 220-240V, C19 to IRAM 2073 (Argentina) Line cord
40K9773	6284	4.3m, 220-240V, C19 to AS/NZS 3112 (Aus/NZ) Line cord
40K9775	6277	4.3m, 250V, C19 to NBR 14136 (Brazil) Line Cord
40K9774	6288	4.3m, 220-240V, C19 to GB2099.1 (China) Line cord

Part number	Feature code	Description
40K9769	6283	4.3m, 16A/230V, C19 to IEC 309-P+N+G (Den/Sws) Line Cord
40K9766	6279	4.3m, 220-240V, C19 to CEE7-VII (European) Line cord
40K9776	6285	4.3m, 220-240V, C19 to IS6538 (India) Line cord
40K9771	6282	4.3m, 220-240V, C19 to SI 32 (Israel) Line cord
40K9768	6281	4.3m, 220-240V, C19 to CEI 23-16 (Italy) Line cord
40K9770	6280	4.3m, 220-240V, C19 to SABS 164 (South Africa) Line cord
41Y9231	6289	4.3m, 15A/250V, C19 to KSC 8305 (S. Korea) Line Cord
81Y2391	6549	4.3m, 16A/230V, C19 to SEV 1011 (Sws) Line Cord
41Y9230	6287	4.3m, 16A/250V, C19 to CNS 10917-3 (Taiwan) Line Cord
40K9767	6278	4.3m, 220-240V, C19 to BS 1363/A w/13A fuse (UK) Line Cord
40K9772	6275	4.3m, 16A/208V, C19 to NEMA L6-20P (US) Line Cord
00D7197	A1NV	4.3m, 15A/250V, C19 to NEMA 6-15P (US) Line Cord

-48V DC power cord

For the -48V DC Power Supply, the following power cable is supported.

Table 62. -48V DC power cable

Part number	Feature code	Description
4X97A59831	BE4V	2.5m, -48VDC Interconnecting Cable

Systems management

The SR650 V3 contains an integrated service processor, XClarity Controller 2 (XCC), which provides advanced control, monitoring, and alerting functions. The XCC2 is based on the AST2600 baseboard management controller (BMC) using a dual-core ARM Cortex A7 32-bit RISC service processor running at 1.2 GHz.

Topics in this section:

- System I/O Board
- Local management
- System status with XClarity Mobile
- Remote management
- XCC2 Platinum
- Lenovo XClarity Provisioning Manager
- Lenovo XClarity Administrator
- Lenovo XClarity Integrators
- Lenovo XClarity Essentials
- Lenovo XClarity Energy Manager
- Lenovo Capacity Planner

System I/O Board

The SR650 V3 implements a separate System I/O Board that connects to the Processor Board. The location of the System I/O Board (also known as the Rear I/O Board in DCSC) is shown in the Components and connectors section. The System I/O Board contains all the connectors visible at the rear of the server as shown in the following figure.

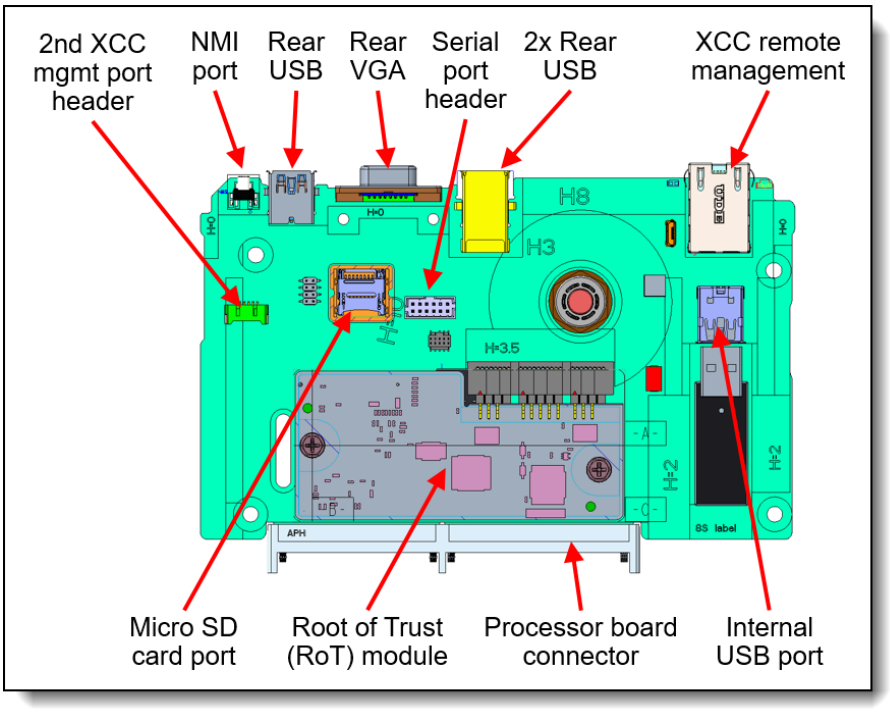

Figure 20. System I/O Board

The board also has the following components:

- Root of Trust (RoT) module - an optional daughter card that implements Platform Firmware Resiliency (PFR) hardware Root of Trust (RoT) which enables the server to be NIST SP800-193 compliant. For more details about PFR, see the Security section.

- Connector to enable an additional redundant Ethernet connection to the XCC2 controller. The connector is used in conjuction with the ThinkSystem Redundant System Management Port Adapter. For details, see the Remote management section.
- Internal USB port - to allow the booting of an operating system from a USB key. The VMware ESXi preloads use this port for example. Preloads are described in the Operating system support section.
- MicroSD card port to enable the use of a MicroSD card for additional storage for use with the XCC2 controller. XCC2 can use the storage as a Remote Disc on Card (RDOC) device (up to 4GB of storage). It can also be used to store firmware updates (including N-1 firmware history) for ease of deployment.

  Tip: Without a MicroSD card installed, the XCC2 controller will have 100MB of available RDOC storage.

Ordering information for the supported USB drive and Micro SD card are listed in the following table.

Table 63. Media for use with the System I/O Board

Part number	Feature code	Description
4X77A77065	BNWN	ThinkSystem USB 32GB USB 3.0 Flash Drive
4X77A77064	BNWP	ThinkSystem MicroSD 32GB Class 10 Flash Memory Card

Local management

The SR650 V3 offers a front operator panel with key LED status indicators, as shown in the following figure.

Tip: The Network LED only shows network activity of the installed OCP network adapter.

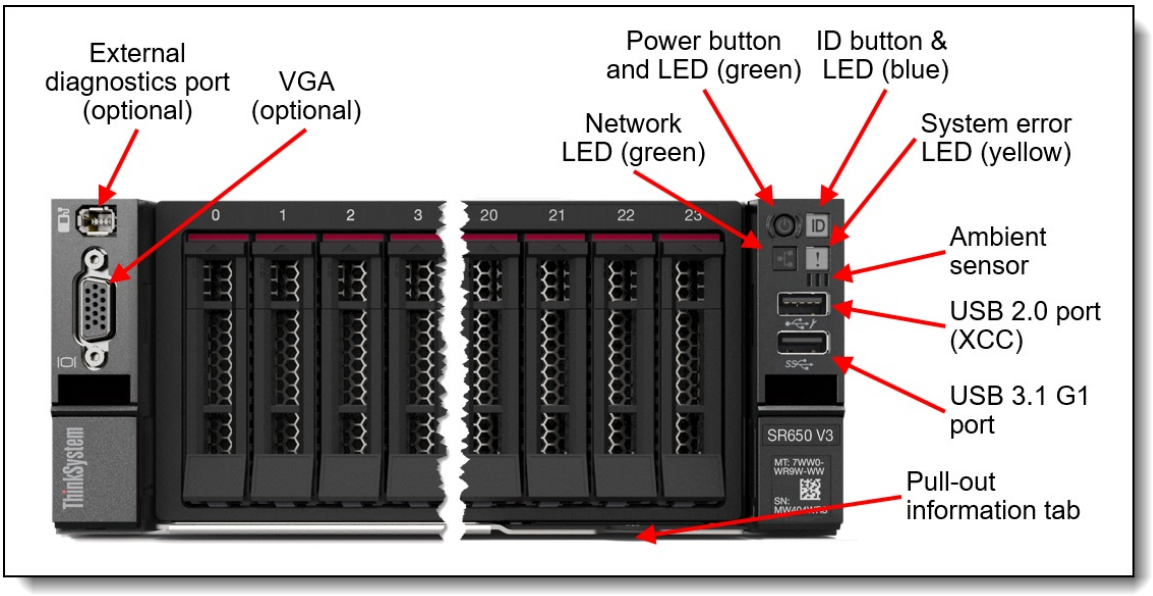

Figure 21. Front operator controls are on the left and right side of the server

Light path diagnostics

The server offers light path diagnostics. If an environmental condition exceeds a threshold or if a system component fails, XCC lights LEDs inside the server to help you diagnose the problem and find the failing part. The server has fault LEDs next to the following components:

- Each memory DIMM

- Each drive bay
- Each power supply

Front VGA and External Diagnostics ports

The VGA port at the rear of the server is included in all models, however the VGA port at the front of the server is optional. Also optional is the External Diagnostics port which enables the use of the External Diagnostics Handset.

To configure either the VGA port or the External Diagnostics port at the front of the server, select one of the following feature codes when configuring the server.

Table 64. Front VGA port

Part number	Feature code	Description	Front VGA port	External diagnostics port
CTO only	BQQ2	ThinkSystem 2U V3 EIA Latch Standard	No	No
4XH7A86164	BQQ1	ThinkSystem V3 2U EIA Latch with VGA & External Diagnostics Ports	Included	Included
4X97A87065	BQQ4	ThinkSystem 2U V3 EIA Latch with External Diagnostics Port	No	Included
4X97A87067	BQQ3	ThinkSystem 2U V3 EIA Latch with VGA Port	Included	No

External Diagnostics Handset

The SR650 V3 optionally has a port to connect an External Diagnostics Handset as described in the preceding section. The External Diagnostics Handset has the same functions as the Integrated Diagnostics Panel but has the advantages of not consuming space on the front of the server plus it can be shared among many servers in your data center. The handset has a magnet on the back of it to allow you to easily mount it on a convenient place on any rack cabinet.

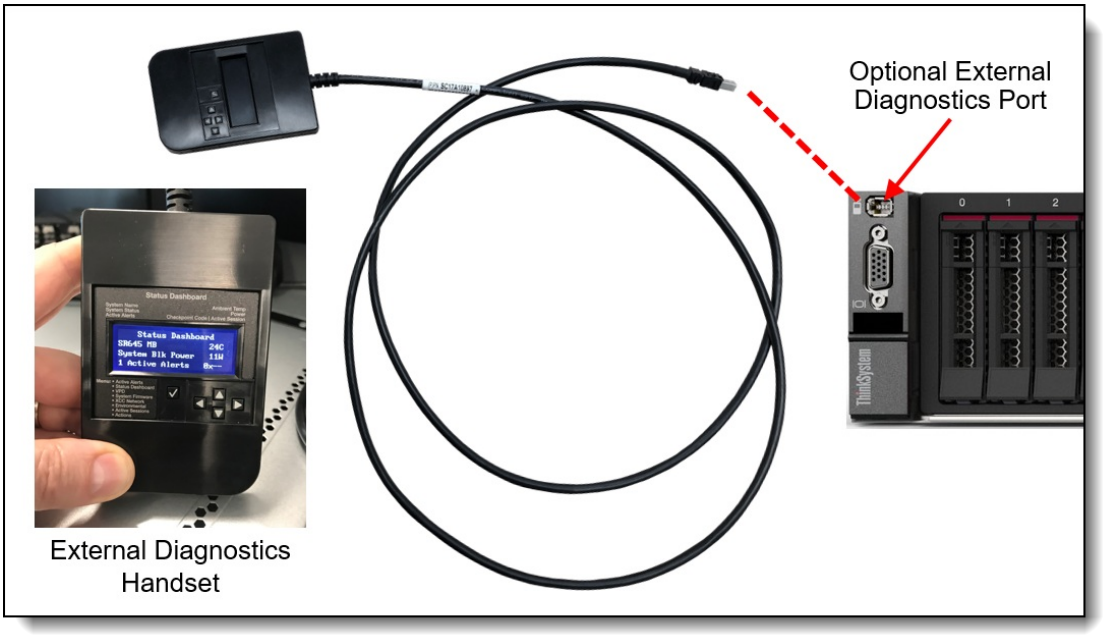

Figure 22. External Diagnostics Handset

Ordering information for the External Diagnostics Handset with is listed in the following table.

Table 65. External Diagnostics Handset ordering information

Part number	Feature code	Description
4TA7A64874	BEUX	ThinkSystem External Diagnostics Handset

Integrated Diagnostics Panel for 8x 2.5-inch and 16x 2.5-inch drive bay configurations

For configurations with 8x 2.5-inch or 16x 2.5-inch drive bays at the front, the server can optionally be configured to have a pull-out Integrated Diagnostics Panel. The following figure shows the standard (fixed) operator panel and the optional Integrated Diagnostics Panel.

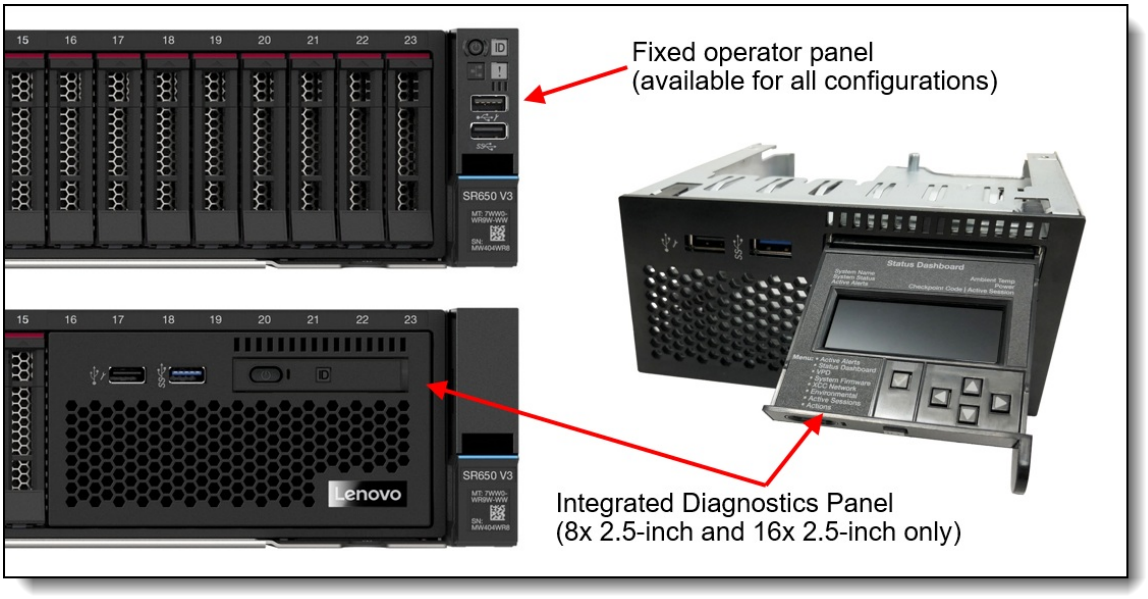

Figure 23. Operator panel choices for the 8x 2.5-inch drive bay configuration

The Integrated Diagnostics Panel allows quick access to system status, firmware, network, and health information. The LCD display on the panel and the function buttons give you access to the following information:

- Active alerts
- Status Dashboard
- System VPD: machine type & mode, serial number, UUID string
- System firmware levels: UEFI and XCC firmware
- XCC network information: hostname, MAC address, IP address, DNS addresses
- Environmental data: Ambient temperature, CPU temperature, AC input voltage, estimated power consumption
- Active XCC sessions
- System reset action

The Integrated Diagnostics Panel can be configured as listed in the following table. It is only available configure-to-order (CTO); not available as a field upgrade.

Table 66. Ordering information for the Integrated Diagnostics Panel

Part number	Feature code	Description
CTO only	BMJA	ThinkSystem 2U 16x2.5" Front Operator Panel v2

Information pull-out tab

The front of the server also houses an information pull-out tab (also known as the network access tag). See Figure 2 for the location. A label on the tab shows the network information (MAC address and other data) to remotely access the service processor.

System status with XClarity Mobile

The XClarity Mobile app includes a tethering function where you can connect your Android or iOS device to the server via USB to see the status of the server.

The steps to connect the mobile device are as follows:

1. Enable USB Management on the server, by holding down the ID button for 3 seconds (or pressing the dedicated USB management button if one is present)
2. Connect the mobile device via a USB cable to the server's USB port with the management symbol 
3. In iOS or Android settings, enable Personal Hotspot or USB Tethering
4. Launch the Lenovo XClarity Mobile app

Once connected you can see the following information:

- Server status including error logs (read only, no login required)
- Server management functions (XClarity login credentials required)

Remote management

The server offers a dedicated RJ45 port at the rear of the server for remote management via the XClarity Controller management processor. The port supports 10/100/1000 Mbps speeds.

Remote server management is provided through industry-standard interfaces:

- Intelligent Platform Management Interface (IPMI) Version 2.0
- Simple Network Management Protocol (SNMP) Version 3 (no SET commands; no SNMP v1)
- Common Information Model (CIM-XML)
- Representational State Transfer (REST) support
- Redfish support (DMTF compliant)
- Web browser - HTML 5-based browser interface (Java and ActiveX not required) using a responsive design (content optimized for device being used - laptop, tablet, phone) with NLS support

The SR650 V3 also supports the use of an OCP adapter that provides an additional redundant Ethernet connection to the XCC2 controller. Ordering information is listed in the following table.

Table 67. Redundant System Management Port Adapter

Part number	Feature code	Description	Maximum quantity
4XC7A85319	BTMQ	ThinkSystem V3 Management NIC Adapter Kit	1

The use of this adapter allows concurrent remote access using both the connection on the adapter and the onboard RJ45 remote management port provided by the server. The adapter and onboard port have separate IP addresses.

Configuration rules:

- The Redundant System Management Port Adapter is installed in the OCP adapter slot at the rear of the server and is mutually exclusive with any OCP network adapter.

- It is not supported installed in the front OCP slot (if the front OCP slot is configured)
- If the Redundant System Management Port Adapter is installed in the rear slot, then the front OCP slot (if configured) cannot be used.

The following figure shows the server with the Redundant System Management Port Adapter installed in the OCP slot.

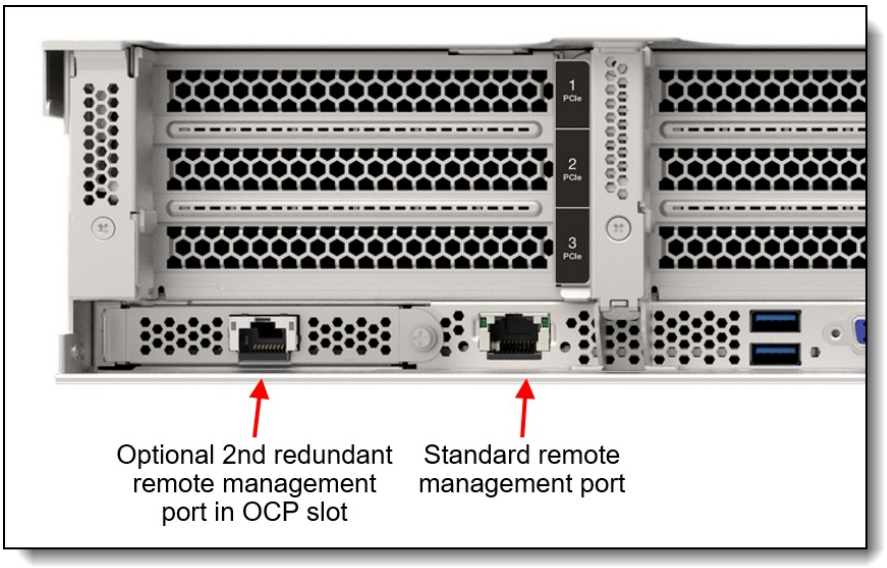

Figure 24. SR650 V3 with the Redundant System Management Port Adapter installed

IPMI via the Ethernet port (IPMI over LAN) is supported, however it is disabled by default. For CTO orders you can specify whether you want to the feature enabled or disabled in the factory, using the feature codes listed in the following table.

Table 68. IPMI-over-LAN settings

Feature code	Description
B7XZ	Disable IPMI-over-LAN (default)
B7Y0	Enable IPMI-over-LAN

XCC2 Platinum

The XCC2 service processor in the SR650 V3 supports an upgrade to a Platinum level of features. Compared to the XCC functions of ThinkSystem V2 and earlier systems, Platinum adds the same features as Enterprise and Advanced levels in ThinkSystem V2, plus additional features.

XCC2 Platinum adds the following Enterprise and Advanced functions:

- Remotely viewing video with graphics resolutions up to 1600x1200 at 75 Hz with up to 23 bits per pixel, regardless of the system state
- Remotely accessing the server using the keyboard and mouse from a remote client
- International keyboard mapping support
- Syslog alerting
- Redirecting serial console via SSH
- Component replacement log (Maintenance History log)
- Access restriction (IP address blocking)
- Lenovo SED security key management
- Displaying graphics for real-time and historical power usage data and temperature
- Boot video capture and crash video capture

- Virtual console collaboration - Ability for up to 6 remote users to be log into the remote session simultaneously
- Remote console Java client
- Mapping the ISO and image files located on the local client as virtual drives for use by the server
- Mounting the remote ISO and image files via HTTPS, SFTP, CIFS, and NFS
- Power capping
- System utilization data and graphic view
- Single sign on with Lenovo XClarity Administrator
- Update firmware from a repository
- License for XClarity Energy Manager

XCC2 Platinum also adds the following features that are new to XCC2:

- System Guard - Monitor hardware inventory for unexpected component changes, and simply log the event or prevent booting
- Enterprise Strict Security mode - Enforces FIPS 140-3 level security and enhanced NIST 800-193 support
- Neighbor Group - Enables administrators to manage and synchronize configurations and firmware level across multiple servers
- Mini-Log - New service tool that provides XCC first-failure logs in HTML and JSON format

Ordering information is listed in the following table. XCC2 Platinum is a software license upgrade - no additional hardware is required.

Table 69. XCC2 Platinum license upgrade

Part number	Feature code	Description
7S0X000DWW	S91X	Lenovo XClarity XCC2 Platinum Upgrade

Lenovo XClarity Provisioning Manager

Lenovo XClarity Provisioning Manager (LXPM) is a UEFI-based application embedded in ThinkSystem servers and accessible via the F1 key during system boot.

LXPM provides the following functions:

- Graphical UEFI Setup
- System inventory information and VPD update
- System firmware updates (UEFI and XCC)
- RAID setup wizard
- OS installation wizard (including unattended OS installation)
- Diagnostics functions

Lenovo XClarity Administrator

Lenovo XClarity Administrator is a centralized resource management solution designed to reduce complexity, speed response, and enhance the availability of Lenovo systems and solutions. It provides agent-free hardware management for ThinkSystem servers, in addition to ThinkServer, System x, and Flex System servers. The administration dashboard is based on HTML 5 and allows fast location of resources so tasks can be run quickly.

Because Lenovo XClarity Administrator does not require any agent software to be installed on the managed endpoints, there are no CPU cycles spent on agent execution, and no memory is used, which means that up to 1GB of RAM and 1 - 2% CPU usage is saved, compared to a typical managed system where an agent is required.

Lenovo XClarity Administrator is an optional software component for the SR650 V3. The software can be downloaded and used at no charge to discover and monitor the SR650 V3 and to manage firmware upgrades.

If software support is required for Lenovo XClarity Administrator, or premium features such as configuration management and operating system deployment are required, Lenovo XClarity Pro software subscription should be ordered. Lenovo XClarity Pro is licensed on a per managed system basis, that is, each managed Lenovo system requires a license.

The following table lists the geo-specific Lenovo XClarity software license options.

Table 70. Lenovo XClarity software options

Part number (NA, AP, Japan markets)	Part number (EMEA, LA markets)	Description
00MT201	00MT207	Lenovo XClarity Pro, per Managed Endpoint w/1 Yr SW S&S
00MT202	00MT208	Lenovo XClarity Pro, per Managed Endpoint w/3 Yr SW S&S
00MT203	00MT209	Lenovo XClarity Pro, per Managed Endpoint w/5 Yr SW S&S

Lenovo XClarity Administrator offers the following standard features that are available at no charge:

- Auto-discovery and monitoring of Lenovo systems
- Firmware updates and compliance enforcement
- External alerts and notifications via SNMP traps, syslog remote logging, and e-mail
- Secure connections to managed endpoints
- NIST 800-131A or FIPS 140-2 compliant cryptographic standards between the management solution and managed endpoints
- Integration into existing higher-level management systems such as cloud automation and orchestration tools through REST APIs, providing extensive external visibility and control over hardware resources
- An intuitive, easy-to-use GUI
- Scripting with Windows PowerShell, providing command-line visibility and control over hardware resources

Lenovo XClarity Administrator offers the following premium features that require an optional Pro license:

- Pattern-based configuration management that allows to define configurations once and apply repeatedly without errors when deploying new servers or redeploying existing servers without disrupting the fabric
- Bare-metal deployment of operating systems and hypervisors to streamline infrastructure provisioning

For more information, refer to the Lenovo XClarity Administrator Product Guide:
http://lenovopress.com/tips1200

Lenovo XClarity Integrators

Lenovo also offers software plug-in modules, Lenovo XClarity Integrators, to manage physical infrastructure from leading external virtualization management software tools including those from Microsoft and VMware.

These integrators are offered at no charge, however if software support is required, a Lenovo XClarity Pro software subscription license should be ordered.

Lenovo XClarity Integrators offer the following additional features:

- Ability to discover, manage, and monitor Lenovo server hardware from VMware vCenter or Microsoft System Center
- Deployment of firmware updates and configuration patterns to Lenovo x86 rack servers and Flex System from the virtualization management tool
- Non-disruptive server maintenance in clustered environments that reduces workload downtime by dynamically migrating workloads from affected hosts during rolling server updates or reboots
- Greater service level uptime and assurance in clustered environments during unplanned hardware events by dynamically triggering workload migration from impacted hosts when impending hardware failures are predicted

For more information about all the available Lenovo XClarity Integrators, see the Lenovo XClarity Administrator Product Guide: https://lenovopress.com/tips1200-lenovo-xclarity-administrator

Lenovo XClarity Essentials

Lenovo offers the following XClarity Essentials software tools that can help you set up, use, and maintain the server at no additional cost:

- Lenovo Essentials OneCLI

  OneCLI is a collection of server management tools that uses a command line interface program to manage firmware, hardware, and operating systems. It provides functions to collect full system health information (including health status), configure system settings, and update system firmware and drivers.

- Lenovo Essentials UpdateXpress

  The UpdateXpress tool is a standalone GUI application for firmware and device driver updates that enables you to maintain your server firmware and device drivers up-to-date and help you avoid unnecessary server outages. The tool acquires and deploys individual updates and UpdateXpress System Packs (UXSPs) which are integration-tested bundles.

- Lenovo Essentials Bootable Media Creator

  The Bootable Media Creator (BOMC) tool is used to create bootable media for offline firmware update.

For more information and downloads, visit the Lenovo XClarity Essentials web page: http://support.lenovo.com/us/en/documents/LNVO-center

Lenovo XClarity Energy Manager

Lenovo XClarity Energy Manager (LXEM) is a power and temperature management solution for data centers. It is an agent-free, web-based console that enables you to monitor and manage power consumption and temperature in your data center through the management console. It enables server density and data center capacity to be increased through the use of power capping.

LXEM is a licensed product. A single-node LXEM license is included with the XClarity Controller Platinum upgrade as described in the Remote Management section. If your server does not have the XCC Platinum upgrade, Energy Manager licenses can be ordered as shown in the following table.

Table 71. Lenovo XClarity Energy Manager

Part number	Description
4L40E51621	Lenovo XClarity Energy Manager Node License (1 license needed per server)

For more information about XClarity Energy Manager, see the following resources:

- Lenovo Support page:
  https://datacentersupport.lenovo.com/us/en/solutions/lnvo-lxem
- Lenovo Information Center:
  https://sysmgt.lenovofiles.com/help/topic/LXEM/lxem_overview.html?cp=4

Lenovo Capacity Planner

Lenovo Capacity Planner is a power consumption evaluation tool that enhances data center planning by enabling IT administrators and pre-sales professionals to understand various power characteristics of racks, servers, and other devices. Capacity Planner can dynamically calculate the power consumption, current, British Thermal Unit (BTU), and volt-ampere (VA) rating at the rack level, improving the planning efficiency for large scale deployments.

For more information, refer to the Capacity Planner web page:
http://datacentersupport.lenovo.com/us/en/solutions/lnvo-lcp

Security

Topics in this section:

- Security features
- Platform Firmware Resiliency - Lenovo ThinkShield
- Intel Transparent Supply Chain
- Security standards

Security features

The SR650 V3 server offers the following electronic security features:

- Secure Boot function of the Intel Xeon processor
- Support for Platform Firmware Resiliency (PFR) hardware Root of Trust (RoT) - see the Platform Firmware Resiliency section
- Firmware signature processes compliant with FIPS and NIST requirements
- Administrator and power-on password
- Integrated Trusted Platform Module (TPM) supporting TPM 2.0
- Self-encrypting drives (SEDs) with support for enterprise key managers - see the SED encryption key management section

The server is NIST SP 800-147B compliant.

The SR650 V3 server also offers the following physical security features:

- Optional chassis intrusion switch
- Optional lockable front security bezel

The optional lockable front security bezel is shown in the following figure and includes a key that enables you to secure the bezel over the drives and system controls thereby reducing the chance of unauthorized or accidental access to the server.

Front PCIe slots: The use of the security bezel is not supported when the server has front PCIe slots.



Figure 25. Lockable front security bezel

The dimensions of the security bezel are:

- Width: 437 mm (17.2 in.)
- Height: 87 mm (3.4 in.)
- Width: 23 mm (0.9 in.)

The following table lists the security options for the SR650 V3.

Table 72. Security features

Part number	Feature code	Description
4X97A82927	BAJJ	ThinkSystem V3 Intrusion Cable
4XH7A09886	B8M2	ThinkSystem SR650 V2/SR665 Security Bezel v2

Platform Firmware Resiliency - Lenovo ThinkShield

Lenovo's ThinkShield Security is a transparent and comprehensive approach to security that extends to all dimensions of our data center products: from development, to supply chain, and through the entire product lifecycle.

The ThinkSystem SR650 V3 includes Platform Firmware Resiliency (PFR) hardware Root of Trust (RoT) which enables the system to be NIST SP800-193 compliant. This offering further enhances key platform subsystem protections against unauthorized firmware updates and corruption, to restore firmware to an integral state, and to closely monitor firmware for possible compromise from cyber attacks.

PFR operates upon the following server components:

- UEFI image – the low-level server firmware that connects the operating system to the server hardware
- XCC image – the management "engine" software that controls and reports on the server status separate from the server operating system
- FPGA image – the code that runs the server's lowest level hardware controller on the motherboard

The Lenovo Platform Root of Trust Hardware performs the following three main functions:

- Detection – Measures the firmware and updates for authenticity
- Recovery – Recovers a corrupted image to a known-safe image
- Protection – Monitors the system to ensure the known-good firmware is not maliciously written

These enhanced protection capabilities are implemented using a dedicated, discrete security processor whose implementation has been rigorously validated by leading third-party security firms. Security evaluation results and design details are available for customer review – providing unprecedented transparency and assurance.

The SR650 V3 includes support for Secure Boot, a UEFI firmware security feature developed by the UEFI Consortium that ensures only immutable and signed software are loaded during the boot time. The use of Secure Boot helps prevent malicious code from being loaded and helps prevent attacks, such as the installation of rootkits. Lenovo offers the capability to enable secure boot in the factory, to ensure end-to-end protection. Alternatively, Secure Boot can be left disabled in the factory, allowing the customer to enable it themselves at a later point, if desired.

The following table lists the feature code to enable secure boot in the factory, or to leave it disabled.

Table 73. Secure Boot options

Part number	Feature code	Description	Purpose
CTO only	BPKQ	TPM 2.0 with security boot	Configure the system in the factory with Secure Boot enabled.
CTO only	BPKR	TPM 2.0	Configure the system without Secure Boot enabled. Customers can enable Secure Boot later if desired.

Tip: If Secure Boot is not enabled in the factory, it can be enabled later by the customer. However once Secure Boot is enabled, it cannot be disabled.

Intel Transparent Supply Chain

Add a layer of protection in your data center and have peace of mind that the server hardware you bring into it is safe authentic and with documented, testable, and provable origin.

Lenovo has one of the world's best supply chains, as ranked by Gartner Group, backed by extensive and mature supply chain security programs that exceed industry norms and US Government standards. Now we are the first Tier 1 manufacturer to offer Intel® Transparent Supply Chain in partnership with Intel, offering you an unprecedented degree of supply chain transparency and assurance.

To enable Intel Transparent Supply Chain for the Intel-based servers in your order, add the following feature code in the DCSC configurator, under the Security tab.

Table 74. Intel Transparent Supply Chain ordering information

Feature code	Description
BB0P	Intel Transparent Supply Chain

For more information on this offering, see the paper *Introduction to Intel Transparent Supply Chain on Lenovo ThinkSystem Servers*, available from https://lenovopress.com/lp1434-introduction-to-intel-transparent-supply-chain-on-thinksystem-servers.

Security standards

The SR650 V3 supports the following security standards and capabilities:

- **Industry Standard Security Capabilities**
  - Intel CPU Enablement
    - AES-NI (Advanced Encryption Standard New Instructions)
    - CBnT (Converged Boot Guard and Trusted Execution Technology)
    - CET (Control flow Enforcement Technology)
    - Hardware-based side channel attack resilience enhancements
    - MKTME/TME (Multi-Key Total Memory Encryption)

        - SGX (Software Guard eXtensions)
        - SGX-TEM (Trusted Environment Mode)
        - TDX (Trust Domain Extensions)
        - TXT (Trusted eXecution Technology)
        - VT (Virtualization Technology)
        - XD (eXecute Disable)
    - Microsoft Windows Security Enablement
        - Credential Guard
        - Device Guard
        - Host Guardian Service
    - TCG (Trusted Computing Group) TPM (Trusted Platform Module) 2.0
    - UEFI (Unified Extensible Firmware Interface) Forum Secure Boot
- **Hardware Root of Trust and Security**
    - Independent security subsystem providing platform-wide NIST SP800-193 compliant Platform Firmware Resilience (PFR)
    - Management domain RoT supplemented by the Secure Boot features of XCC
- **Platform Security**

  For more information on platform security, see the paper “How to Harden the Security of your ThinkSystem Server and Management Applications” available from https://lenovopress.com/lp1260-how-to-harden-the-security-of-your-thinksystem-server.

    - Boot and run-time firmware integrity monitoring with rollback to known-good firmware (e.g., “self-healing”)
    - Non-volatile storage bus security monitoring and filtering
    - Resilient firmware implementation, such as to detect and defeat unauthorized flash writes or SMM (System Management Mode) memory incursions
    - Patented IPMI KCS channel privileged access authorization (USPTO Patent# 11,256,810)
    - Host and management domain authorization, including integration with CyberArk for enterprise password management
    - KMIP (Key Management Interoperability Protocol) compliant, including support for IBM SKLM and Thales KeySecure
    - Reduced “out of box” attack surface
    - Configurable network services
    - FIPS 140-3 (in process) validated cryptography for XCC
    - CNSA Suite 1.0 Quantum-resistant cryptography for XCC
    - Lenovo System Guard
- **Standards Compliance and/or Support**
    - NIST SP800-131A rev 2 “Transitioning the Use of Cryptographic Algorithms and Key Lengths”
    - NIST SP800-147B “BIOS Protection Guidelines for Servers”
    - NIST SP800-193 “Platform Firmware Resiliency Guidelines”
    - ISO/IEC 11889 “Trusted Platform Module Library”
    - Common Criteria TCG Protection Profile for “PC Client Specific TPM 2.0”
    - European Union Commission Regulation 2019/424 (“ErP Lot 9”) “Ecodesign Requirements for Servers and Data Storage Products” Secure Data Deletion
    - Optional FIPS 140-2 validated Self-Encrypting Disks (SEDs) with external KMIP-based key management
- **Product and Supply Chain Security**

- Suppliers validated through Lenovo's Trusted Supplier Program
- Developed in accordance with Lenovo's Secure Development Lifecycle (LSDL)
- Continuous firmware security validation through automated testing, including static code analysis, dynamic network and web vulnerability testing, software composition analysis, and subsystem-specific testing, such as UEFI security configuration validation
- Ongoing security reviews by US-based security experts, with attestation letters available from our third-party security partners
- Digitally signed firmware, stored and built on US-based infrastructure and signed on US-based Hardware Security Modules (HSMs)
- Manufacturing transparency via Intel Transparent Supply Chain (for details, see https://lenovopress.com/lp1434-introduction-to-intel-transparent-supply-chain-on-lenovo-thinksystem-servers)
- TAA (Trade Agreements Act) compliant manufacturing, by default in Mexico for North American markets with additional US and EU manufacturing options
- US 2019 NDAA (National Defense Authorization Act) Section 889 compliant

Rack installation

The following table lists the rack installation options that are available for the SR650 V3.

Table 75. Rack installation options

Part number	Feature	Description
Rail Kits		
4M17A13564	BK7W	ThinkSystem Toolless Friction Rail v2
4M17A11754	B8LA	ThinkSystem Toolless Slide Rail Kit v2
4M17A11756	B91Y	ThinkSystem Toolless Slide Rail Kit v2 with 2U CMA
Enhanced Rail Kits for > 34 kg server weight*		
4M17A11755	B8LB	ThinkSystem Toolless Slide Rail Kit v2 Enhanced
4M17A11757	B97N	ThinkSystem Toolless Slide Rail Kit v2 Enhanced with 2U CMA
Separate Cable Management Arm		
7M27A05698	B135	ThinkSystem 2U CMA Upgrade Kit for Toolless Slide Rail

* The Enhanced Slide Rail Kits are used when the server is shipped in a rack and the server is 34 kg or heavier (configuration with 20x 3.5-inch HDDs for example)

The following table summarizes the rail kit features and specifications.

Table 76. Rail kit features and specifications summary

Feature	ThinkSystem Toolless Friction Rail v2	ThinkSystem Toolless Slide Rail Kit v2	ThinkSystem Toolless Slide Rail Kit v2 Enhanced	ThinkSystem Toolless Slide Rail Kit v2 with 2U CMA	ThinkSystem Toolless Slide Rail Kit v2 Enhanced with 2U CMA
Option part number	4M17A13564	4M17A11754	4M17A11755	4M17A11756	4M17A11757
Rail type	Half-out slide rail (friction)	Full-out slide rail (ball bearing)	Full-out slide rail (ball bearing)	Full-out slide rail (ball bearing)	Full-out slide rail (ball bearing)
Toolless installation	Yes	Yes	Yes	Yes	Yes
CMA support	No	Optional, 7M27A05698*	Optional, 7M27A05698*	Included	Included
Supported rack type	Four-post IBM and Lenovo standard rack, complying with the IEC standard	Four-post IBM and Lenovo standard rack, complying with the IEC standard	Four-post IBM and Lenovo standard rack, complying with the IEC standard	Four-post IBM and Lenovo standard rack, complying with the IEC standard	Four-post IBM and Lenovo standard rack, complying with the IEC standard
In-rack server maintenance	No	Yes	Yes	Yes	Yes
1U PDU support	Yes	Yes	Yes	Yes	Yes
0U PDU support	Yes	Limited support**	Limited support**	Limited support**	Limited support**
Supported mounting holes	Square or round	Square or round	Square, round, or threaded	Square or round	Square, round, or threaded
Thickness of mounting flanges	2.0-3.3 mm (0.08-0.13 inches)	2.0-3.3 mm (0.08-0.13 inches)	2.0-3.3 mm (0.08-0.13 inches)	2.0-3.3 mm (0.08-0.13 inches)	2.0-3.3 mm (0.08-0.13 inches)
Supported distance between front and rear mounting flanges‡	610-864 mm (24-34 inches)	610-813 mm (24-32 inches)	635-813 mm (25-32 inches)	610-813 mm (24-32 inches)	635-813 mm (25-32 inches)
Rail length†	751 mm (29.6 inches)	740 mm (29.1 inches)	740 mm (29.1 inches)	820 mm (32.3 inches)	820 mm (32.3 inches)

* CMA mounting brackets are not preinstalled on the rail. The CMA mounting brackets are contained in the CMA option kit package and you will need to install the CMA mounting brackets first. For detailed instructions, refer to the documentation that comes with the CMA option kit.
** If you want to install the rails and a 0U PDU into the same rack, the rack must meet the height and depth requirements as described in ThinkSystem Rail Support Matrix.
‡ For best performance, it is recommended that you install the rails to the racks with a 719-mm distance (28.31-inch, Lenovo rack default distance) between the front and rear mounting flanges.
† Measured when mounted on the rack, from the front surface of the front mounting flange to the rear most point of the rail. Rail is in closed position.

Operating system support

The SR650 V3 supports the following operating systems:

- Microsoft Windows 10 Professional (x64)
- Microsoft Windows 11 Professional (x64)
- Microsoft Windows Server 2019
- Microsoft Windows Server 2022
- Red Hat Enterprise Linux 8.6
- Red Hat Enterprise Linux 8.7
- Red Hat Enterprise Linux 9.0
- Red Hat Enterprise Linux 9.1
- SUSE Linux Enterprise Server 15 SP4
- SUSE Linux Enterprise Server 15 Xen SP4
- Ubuntu 22.04 LTS 64-bit
- VMware ESXi 7.0 U3
- VMware ESXi 8.0

For a complete list of supported, certified and tested operating systems, plus additional details and links to relevant web sites, see the Operating System Interoperability Guide:
https://lenovopress.lenovo.com/osig#servers=sr650-v3-7d75-7d76

For configure-to-order configurations, the server can be preloaded with VMware ESXi installed on M.2 cards or 7mm drives. Ordering information is listed in the following table.

Table 77. VMware ESXi preload

Feature code	Description
BMEY	VMware ESXi 7.0 U3 (Factory Installed)
BMT5	VMware ESXi 8.0 (Factory Installed)

You can download supported VMware vSphere hypervisor images from the following web page and load it on the M.2 drives or 7mm drives using the instructions provided:

https://vmware.lenovo.com/content/custom_iso/

Physical and electrical specifications

The SR650 V3 has the following overall physical dimensions, excluding components that extend outside the standard chassis, such as EIA flanges, front security bezel (if any), and power supply handles:

- Width: 445 mm (17.5 inches)
- Height: 87 mm (3.4 inches)
- Depth: 766 mm (30.1 inches)

The following table lists the detailed dimensions. See the figure below for the definition of each dimension.

Table 78. Detailed dimensions

Dimension	Description
482 mm	X_a = Width, to the outsides of the front EIA flanges
435 mm	X_b = Width, to the rack rail mating surfaces
445 mm	X_c = Width, to the outer most chassis body feature
87 mm	Y_a = Height, from the bottom of chassis to the top of the chassis
698 mm	Z_a = Depth, from the rack flange mating surface to the rearmost I/O port surface
732 mm	Z_b = Depth, from the rack flange mating surface to the rearmost feature of the chassis body
727 mm (≤1100W PSU) 755 mm (1800W PSU) 781 mm (2400W PSU)	Z_c = Depth, from the rack flange mating surface to the rearmost feature such as power supply handle
34 mm	Z_d = Depth, from the forwardmost feature on front of EIA flange to the rack flange mating surface
46 mm	Z_e = Depth, from the front of security bezel (if applicable) or forwardmost feature to the rack flange mating surface

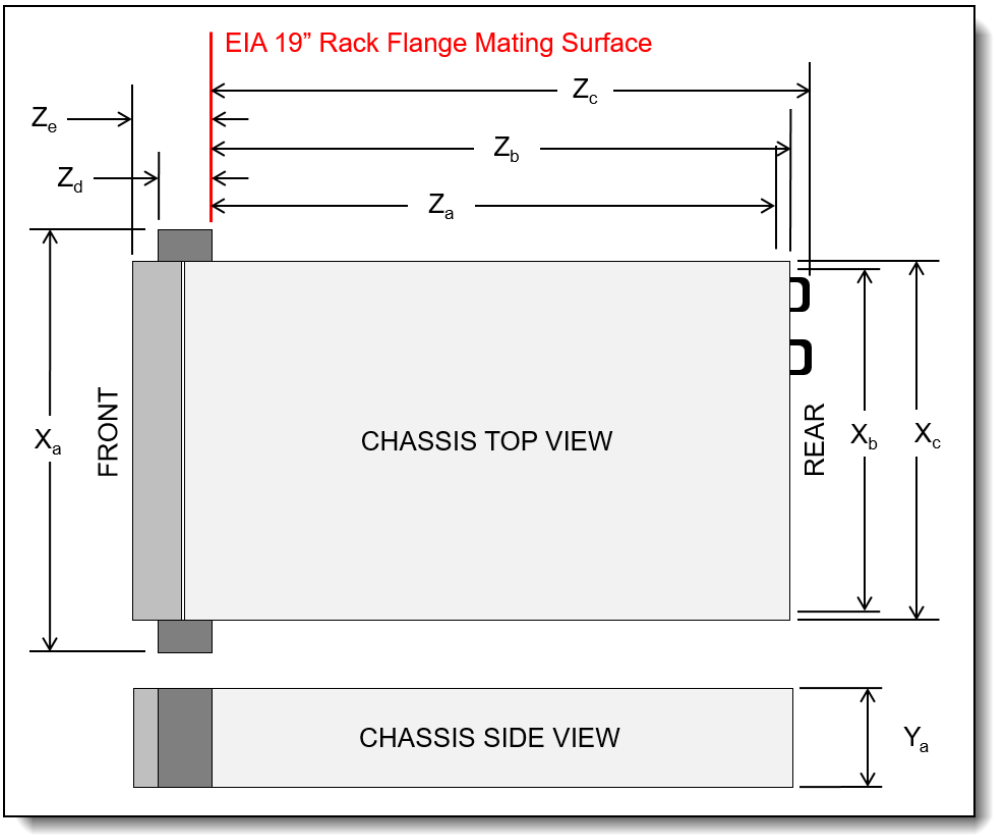

Figure 26. Server dimensions

The shipping dimensions (cardboard packaging) of the SR650 V3 are as follows:

- Width: 592 mm (23.3 inches)
- Height: 282 mm (11.1 inches)
- Depth: 992 mm (39.1 inches)

The server has the following weight:

- Base configuration: 21.4 kg (47.2 lb)
- Maximum weight: 38.8 kg (85.5 lb)

Electrical specifications for AC input power supplies:

- Input voltage:
  - 100 to 127 (nominal) Vac, 50 Hz or 60 Hz
  - 200 to 240 (nominal) Vac, 50 Hz or 60 Hz
  - 180 to 300 Vdc (China only)
- Inlet current: See the following table.

Table 79. Maximum inlet current

Part number	Description	100V AC	200V AC	220V AC	240V DC
AC input power - 80 PLUS Titanium efficiency					
4P57A82019	ThinkSystem 750W 230V Titanium Hot-Swap Gen2 Power Supply v3	No support	4A	3.6A	3.3A
4P57A72666	ThinkSystem 1100W 230V Titanium Hot-Swap Gen2 Power Supply	No support	5.9A	5.3A	5A
4P57A78359	ThinkSystem 1800W 230V Titanium Hot-Swap Gen2 Power Supply	No support	9.7A	8.7A	8.3A
4P57A72667	ThinkSystem 2600W 230V Titanium Hot-Swap Gen2 Power Supply	No support	13.2A	13A	11.9A
AC input power - 80 PLUS Platinum efficiency					
4P57A72670	ThinkSystem 750W 230V/115V Platinum Hot-Swap Gen2 Power Supply v3	8.4A	4.1A	3.69A	3.5A
4P57A72671	ThinkSystem 1100W 230V/115V Platinum Hot-Swap Gen2 Power Supply v3	12A	6A	5.4A	5.1A
4P57A26294	ThinkSystem V2 1800W (230V) Platinum Hot-Swap Power Supply v2	No support	10A	9.1A	9A
4P57A26295	ThinkSystem 2400W 230V Platinum Hot-Swap Gen2 Power Supply	No support	14A	12.6A	12A

Electrical specifications for DC input power supply:

- Input voltage: -48 to -60 Vdc
- Inlet current (1100W power supply): 26 A

Operating environment

The SR650 V3 server complies with ASHRAE Class A2 specifications with most configurations, and depending on the hardware configuration, also complies with ASHRAE Class A3 and Class A4 specifications.

Depending on the hardware configuration, the SR650 V3 server also complies with ASHRAE Class H1 specification. System performance may be impacted when operating temperature is outside ASHRAE H1 specification.

Temperature and humidity

The server is supported in the following environment:

- Air temperature:
  - Operating:
    - ASHRAE Class A2: 10°C to 35°C (50°F to 95°F); the maximum ambient temperature decreases by 1°C for every 300 m (984 ft) increase in altitude above 900 m (2,953 ft).
    - ASHRAE Class A3: 5°C to 40°C (41°F to 104°F); the maximum ambient temperature decreases by 1°C for every 175 m (574 ft) increase in altitude above 900 m (2,953 ft).
    - ASHRAE Class A4: 5°C to 45°C (41°F to 113°F); the maximum ambient temperature decreases by 1°C for every 125 m (410 ft) increase in altitude above 900 m (2,953 ft).
    - ASHRAE Class H1: 5 °C to 25 °C (41 °F to 77 °F); Decrease the maximum ambient temperature by 1°C for every 500 m (1640 ft) increase in altitude above 900 m (2,953 ft).
  - Server off: 5°C to 45°C (41°F to 113°F)
  - Shipment/storage: -40°C to 60°C (-40°F to 140°F)
- Maximum altitude: 3,050 m (10,000 ft)
- Relative Humidity (non-condensing):
  - Operating
    - ASHRAE Class A2: 8% to 80%; maximum dew point: 21°C (70°F)
    - ASHRAE Class A3: 8% to 85%; maximum dew point: 24°C (75°F)
    - ASHRAE Class A4: 8% to 90%; maximum dew point: 24°C (75°F)
    - ASHRAE Class H1: 8% to 80%; Maximum dew point: 17°C (63°F)
  - Shipment/storage: 8% to 90%

Acoustical noise emissions

The server has the following acoustic noise emissions declaration:

- Sound power level (L_{WAd}):
  - Idling: 5.9 Bel (Min), 6.5 Bel (Typical), 7.3 Bel (GPU rich), 7.3 Bel (Storage rich)
  - Operating: 6.5 Bel (Min), 8.1 Bel (Typical), 8.7 Bel (GPU rich), 7.5 Bel (Storage rich)
- Sound pressure level (L_{pAm}):
  - Idling: 41.5 dBA (Min), 51 dBA (Typical), 60.2 dBA (GPU rich), 60.2 dBA (Storage rich)
  - Operating: 48.3 dBA (Min), 66.6 dBA (Typical), 71.9 dBA (GPU rich), 61.3 dBA (Storage rich)

Notes:

- These sound levels were measured in controlled acoustical environments according to procedures specified by ISO7779 and are reported in accordance with ISO 9296.
- The declared acoustic sound levels are based on the following configurations, which may change depending on configuration/conditions：
  - Min: 2x 240W CPU, 12x 64GB RDIMMs, 8x SAS HDDs, RAID 940-8i, Intel E810-DA2 10/25GbE SFP28 2-Port OCP, 2x 1100W PSU
  - Typical: 2x 300W CPU, 24x 64GB RDIMMs, 16x SAS HDDs, RAID 940-8i, Intel E810-DA2 10/25GbE SFP28 2-Port OCP, 2x 1800W PSU
  - GPU rich: 2x 300W CPU, 24x 64GB RDIMMs, 16x SAS HDDs, RAID 940-16i, Intel E810-DA2 10/25GbE SFP28 2-Port OCP, 3x A100 80G GPUs, 2x 2400W PSU
  - Storage rich: 2x 240W CPU, 12x 64GB RDIMMs, 16x SAS HDDs, RAID 940-8i, Intel E810-DA2 10/25GbE SFP28 2-Port OCP, 2x 1800W PSU
- Government regulations (such as those prescribed by OSHA or European Community Directives) may govern noise level exposure in the workplace and may apply to you and your server installation. The actual sound pressure levels in your installation depend upon a variety of factors, including the number of racks in the installation; the size, materials, and configuration of the room; the noise levels from other equipment; the room ambient temperature, and employee's location in relation to the equipment. Further, compliance with such government regulations depends on a variety of additional factors, including the duration of employees' exposure and whether employees wear hearing protection. Lenovo recommends that you consult with qualified experts in this field to determine whether you are in compliance with the applicable regulations.

Shock and vibration

The server has the following vibration and shock limits:

- Vibration:
  - Operating: 0.21 G rms at 5 Hz to 500 Hz for 15 minutes across 3 axes
  - Non-operating: 1.04 G rms at 2 Hz to 200 Hz for 15 minutes across 6 surfaces
- Shock:
  - Operating: 15 G for 3 milliseconds in each direction (positive and negative X, Y, and Z axes)
  - Non-operating:
    - 23 kg - 31 kg: 35 G for 152 in./sec velocity change across 6 surfaces (3x GPU config, 2.5” config)
    - 32 kg - 68 kg: 35 G for 136 in./sec velocity change across 6 surfaces (20x 3.5” HDD config)

Particulate contamination

Airborne particulates (including metal flakes or particles) and reactive gases acting alone or in combination with other environmental factors such as humidity or temperature might damage the system that might cause the system to malfunction or stop working altogether.

The following specifications indicate the limits of particulates that the system can tolerate:

- Reactive gases:
  - The reactivity rate of copper coupons shall be less than 200 Angstroms per month (Å/month)
  - The reactivity rate of silver coupons shall be less than 200 Å/month
- Airborne particulates:
  - The room air should be continuously filtered with MERV 8 filters.
  - Air entering a data center should be filtered with MERV 11 or preferably MERV 13 filters.
  - The deliquescent relative humidity of the particulate contamination should be more than 60% RH
  - Data centers must be free of zinc whiskers

For additional information, see the Specifications section of the Setup Guide for the server, available from the Lenovo ThinkSystem Information Center, https://thinksystem.lenovofiles.com/help/index.jsp

Warranty and Support

The SR650 V3 has a 1-year or 3-year warranty based on the machine type of the system:

- 7D75 - 1 year warranty
- 7D76 - 3 year warranty
- 7D77 - 3 year warranty

The standard warranty terms are customer-replaceable unit (CRU) and onsite (for field-replaceable units FRUs only) with standard call center support during normal business hours and 9x5 Next Business Day Parts Delivered.

Lenovo's additional support services provide a sophisticated, unified support structure for your data center, with an experience consistently ranked number one in customer satisfaction worldwide. Available offerings include:

- **Premier Support**

  Premier Support provides a Lenovo-owned customer experience and delivers direct access to technicians skilled in hardware, software, and advanced troubleshooting, in addition to the following:

  - Direct technician-to-technician access through a dedicated phone line
  - 24x7x365 remote support
  - Single point of contact service
  - End to end case management
  - Third-party collaborative software support
  - Online case tools and live chat support
  - On-demand remote system analysis
- **Warranty Upgrade (Preconfigured Support)**

  Services are available to meet the on-site response time targets that match the criticality of your systems.

  - 3, 4, or 5 years of service coverage
  - 1-year or 2-year post-warranty extensions
  - **Foundation Service**: 9x5 service coverage with next business day onsite response. YourDrive YourData is an optional extra (see below).
  - **Essential Service:** 24x7 service coverage with 4-hour onsite response or 24-hour committed repair (available only in select markets). Bundled with YourDrive YourData.
  - **Advanced Service:** 24x7 service coverage with 2-hour onsite response or 6-hour committed repair (available only in select markets). Bundled with YourDrive YourData.

- **Managed Services**

  Lenovo Managed Services provides continuous 24x7 remote monitoring (plus 24x7 call center availability) and proactive management of your data center using state-of-the-art tools, systems, and practices by a team of highly skilled and experienced Lenovo services professionals.

  Quarterly reviews check error logs, verify firmware & OS device driver levels, and software as needed. We'll also maintain records of latest patches, critical updates, and firmware levels, to ensure you systems are providing business value through optimized performance.

- **Technical Account Management (TAM)**

  A Lenovo Technical Account Manager helps you optimize the operation of your data center based on a deep understanding of your business. You gain direct access to your Lenovo TAM, who serves as your single point of contact to expedite service requests, provide status updates, and furnish reports to track incidents over time. In addition, your TAM will help proactively make service recommendations and manage your service relationship with Lenovo to make certain your needs are met.

- **Enterprise Server Software Support**

  Enterprise Software Support is an additional support service providing customers with software support on Microsoft, Red Hat, SUSE, and VMware applications and systems. Around the clock availability for critical problems plus unlimited calls and incidents helps customers address challenges fast, without incremental costs. Support staff can answer troubleshooting and diagnostic questions, address product comparability and interoperability issues, isolate causes of problems, report defects to software vendors, and more.

- **YourDrive YourData**

  Lenovo's YourDrive YourData is a multi-drive retention offering that ensures your data is always under your control, regardless of the number of drives that are installed in your Lenovo server. In the unlikely event of a drive failure, you retain possession of your drive while Lenovo replaces the failed drive part. Your data stays safely on your premises, in your hands. The YourDrive YourData service can be purchased in convenient bundles and is optional with Foundation Service. It is bundled with Essential Service and Advanced Service.

- **Health Check**

  Having a trusted partner who can perform regular and detailed health checks is central to maintaining efficiency and ensuring that your systems and business are always running at their best. Health Check supports Lenovo-branded server, storage, and networking devices, as well as select Lenovo-supported products from other vendors that are sold by Lenovo or a Lenovo-Authorized Reseller.

Examples of region-specific warranty terms are second or longer business day parts delivery or parts-only base warranty.

If warranty terms and conditions include onsite labor for repair or replacement of parts, Lenovo will dispatch a service technician to the customer site to perform the replacement. Onsite labor under base warranty is limited to labor for replacement of parts that have been determined to be field-replaceable units (FRUs). Parts that are determined to be customer-replaceable units (CRUs) do not include onsite labor under base warranty.

If warranty terms include parts-only base warranty, Lenovo is responsible for delivering only replacement parts that are under base warranty (including FRUs) that will be sent to a requested location for self-service. Parts-only service does not include a service technician being dispatched onsite. Parts must be changed at customer's own cost and labor and defective parts must be returned following the instructions supplied with the spare parts.

Lenovo Service offerings are region-specific. Not all preconfigured support and upgrade options are available in every region. For information about Lenovo service upgrade offerings that are available in your region, refer to the following resources:

- Service part numbers in Lenovo Data Center Solution Configurator (DCSC):
  http://dcsc.lenovo.com/#/services
- Lenovo Services Availability Locator
  http://lenovolocator.com/

For service definitions, region-specific details, and service limitations, please refer to the following documents:

- Lenovo Statement of Limited Warranty for Infrastructure Solutions Group (ISG) Servers and System Storage
  http://pcsupport.lenovo.com/us/en/solutions/ht503310
- Lenovo Data Center Services Agreement
  http://support.lenovo.com/us/en/solutions/ht116628

Services

Lenovo Services is a dedicated partner to your success. Our goal is to reduce your capital outlays, mitigate your IT risks, and accelerate your time to productivity.

Note: Some service options may not be available in all markets or regions. For more information, go to https://www.lenovo.com/services. For information about Lenovo service upgrade offerings that are available in your region, contact your local Lenovo sales representative or business partner.

Here's a more in-depth look at what we can do for you:

- **Asset Recovery Services**

  Asset Recovery Services (ARS) helps customers recover the maximum value from their end-of-life equipment in a cost-effective and secure way. On top of simplifying the transition from old to new equipment, ARS mitigates environmental and data security risks associated with data center equipment disposal. Lenovo ARS is a cash-back solution for equipment based on its remaining market value, yielding maximum value from aging assets and lowering total cost of ownership for your customers. For more information, see the ARS page, https://lenovopress.com/lp1266-reduce-e-waste-and-grow-your-bottom-line-with-lenovo-ars.

- **Assessment Services**

  An Assessment helps solve your IT challenges through an onsite, multi-day session with a Lenovo technology expert. We perform a tools-based assessment which provides a comprehensive and thorough review of a company's environment and technology systems. In addition to the technology based functional requirements, the consultant also discusses and records the non-functional business requirements, challenges, and constraints. Assessments help organizations like yours, no matter how large or small, get a better return on your IT investment and overcome challenges in the ever-changing technology landscape.

- **Design Services**

  Professional Services consultants perform infrastructure design and implementation planning to support your strategy. The high-level architectures provided by the assessment service are turned into low level designs and wiring diagrams, which are reviewed and approved prior to implementation. The implementation plan will demonstrate an outcome-based proposal to provide business capabilities through infrastructure with a risk-mitigated project plan.

- **Basic Hardware Installation**

  Lenovo experts can seamlessly manage the physical installation of your server, storage, or networking hardware. Working at a time convenient for you (business hours or off shift), the technician will unpack and inspect the systems on your site, install options, mount in a rack cabinet, connect to power and network, check and update firmware to the latest levels, verify operation, and dispose of the packaging, allowing your team to focus on other priorities.

- **Deployment Services**

  When investing in new IT infrastructures, you need to ensure your business will see quick time to value with little to no disruption. Lenovo deployments are designed by development and engineering teams who know our Products & Solutions better than anyone else, and our technicians own the process from delivery to completion. Lenovo will conduct remote preparation and planning, configure & integrate systems, validate systems, verify and update appliance firmware, train on administrative tasks, and provide post-deployment documentation. Customer's IT teams leverage our skills to enable IT staff to transform with higher level roles and tasks.

- **Integration, Migration, and Expansion Services**

  Move existing physical & virtual workloads easily, or determine technical requirements to support increased workloads while maximizing performance. Includes tuning, validation, and documenting ongoing run processes. Leverage migration assessment planning documents to perform necessary migrations.

Regulatory compliance

The SR650 V3 conforms to the following standards:

- ANSI/UL 62368-1
- IEC 62368-1 (CB Certificate and CB Test Report)
- FCC - Verified to comply with Part 15 of the FCC Rules, Class A
- Canada ICES-003, issue 7, Class A
- CSA C22.2 No. 62368-1
- CISPR 32, Class A, CISPR 35
- Japan VCCI, Class A
- Taiwan BSMI CNS13438, Class A; CNS14336-1; Section 5 of CNS15663
- CE, UKCA Mark (EN55032 Class A, EN62368-1, EN55024, EN55035, EN61000-3-2, EN61000-3-3, (EU) 2019/424, and EN50581-1 (RoHS))
- Korea KN32, Class A, KN35
- Russia, Belorussia and Kazakhstan, TP EAC 037/2016 (for RoHS)
- Russia, Belorussia and Kazakhstan, EAC: TP TC 004/2011 (for Safety); TP TC 020/2011 (for EMC)
- Australia/New Zealand AS/NZS CISPR 32, Class A; AS/NZS 62368.1
- UL Green Guard, UL2819
- Energy Star 3.0
- EPEAT (NSF/ ANSI 426) Bronze
- China CCC certificate, GB17625.1; GB4943.1; GB/T9254
- China CECP certificate, CQC3135
- China CELP certificate, HJ 2507-2011
- Japanese Energy-Saving Act
- Mexico NOM-019
- TUV-GS (EN62368-1, and EK1-ITB2000)
- India BIS 13252 (Part 1)
- Germany GS

External drive enclosures

The server supports attachment to external drive enclosures using a RAID controller with external ports or a SAS host bus adapter. Adapters supported by the server are listed in the SAS adapters for external storage section.

Note: Information provided in this section is for ordering reference purposes only. For the operating system and adapter support details, refer to the interoperability matrix for a particular storage enclosure that can be found on the Lenovo Data Center Support web site:
http://datacentersupport.lenovo.com

Table 80. External drive enclosures

Description	Part number		
	Worldwide	Japan	PRC
Lenovo Storage D1212 LFF Disk Expansion with Dual SAS IO Modules	4587A11	4587A1J	4587A1C
Lenovo Storage D1224 SFF Disk Expansion with Dual SAS IO Modules	4587A31	4587A3J	4587A3C
Lenovo Storage D3284 4TB x 84 HD Expansion Enclosure	641311F		
Lenovo Storage D3284 6TB x 84 HD Expansion Enclosure	641312F		
Lenovo Storage D3284 8TB x 84 HD Expansion Enclosure	641313F		
Lenovo Storage D3284 10TB x 84 HD Expansion Enclosure	641314F		

For details about supported drives, adapters, and cables, see the following Lenovo Press Product Guides:

- Lenovo Storage D1212 and D1224
  http://lenovopress.com/lp0512
- Lenovo Storage D3284
  http://lenovopress.com/lp0513

External storage systems

Lenovo offers the ThinkSystem DE Series and ThinkSystem DM Series external storage systems for high-performance storage. See the DE Series and DM Series product guides for specific controller models, expansion enclosures and configuration options:

- ThinkSystem DE Series Storage
  https://lenovopress.com/storage/thinksystem/de-series#rt=product-guide
- ThinkSystem DM Series Storage
  https://lenovopress.com/storage/thinksystem/dm-series#rt=product-guide

External backup units

The following table lists the external backup options that are offered by Lenovo.

Table 81. External backup options

Part number	Description
External RDX USB drives	
4T27A10725	ThinkSystem RDX External USB 3.0 Dock
External SAS tape backup drives	
6160S7E	IBM TS2270 Tape Drive Model H7S
6160S8E	IBM TS2280 Tape Drive Model H8S
6160S9E	IBM TS2290 Tape Drive Model H9S
External SAS tape backup autoloaders	
6171S7R	IBM TS2900 Tape Autoloader w/LTO7 HH SAS
6171S8R	IBM TS2900 Tape Autoloader w/LTO8 HH SAS
6171S9R	IBM TS2900 Tape Autoloader w/LTO9 HH SAS
External tape backup libraries	
6741A1F	IBM TS4300 3U Tape Library-Base Unit
6741A3F	IBM TS4300 3U Tape Library-Expansion Unit
Full High 8 Gb Fibre Channel for TS4300	
01KP938	LTO 7 FH Fibre Channel Drive
01KP954	LTO 8 FH Fibre Channel Drive
02JH837	LTO 9 FH Fibre Channel Drive
Half High 8 Gb Fibre Channel for TS4300	
01KP936	LTO 7 HH Fibre Channel Drive
01KP952	LTO 8 HH Fibre Channel Drive
02JH835	LTO 9 HH Fibre Channel Drive
Half High 6 Gb SAS for TS4300	
01KP937	LTO 7 HH SAS Drive
01KP953	LTO 8 HH SAS Drive
02JH836	LTO 9 HH SAS Drive

For more information, see the list of Product Guides in the Backup units category:
https://lenovopress.com/servers/options/backup

Fibre Channel SAN switches

Lenovo offers the ThinkSystem DB Series of Fibre Channel SAN switches for high-performance storage expansion. See the DB Series product guides for models and configuration options:

- ThinkSystem DB Series SAN Switches:
  https://lenovopress.com/storage/switches/rack#rt=product-guide

Uninterruptible power supply units

The following table lists the uninterruptible power supply (UPS) units that are offered by Lenovo.

Table 82. Uninterruptible power supply units

Part number	Description
55941AX	RT1.5kVA 2U Rack or Tower UPS (100-125VAC)
55941KX	RT1.5kVA 2U Rack or Tower UPS (200-240VAC)
55942AX	RT2.2kVA 2U Rack or Tower UPS (100-125VAC)
55942KX	RT2.2kVA 2U Rack or Tower UPS (200-240VAC)
55943AX	RT3kVA 2U Rack or Tower UPS (100-125VAC)
55943KX	RT3kVA 2U Rack or Tower UPS (200-240VAC)
55945KX	RT5kVA 3U Rack or Tower UPS (200-240VAC)
55946KX	RT6kVA 3U Rack or Tower UPS (200-240VAC)
55948KX	RT8kVA 6U Rack or Tower UPS (200-240VAC)
55949KX	RT11kVA 6U Rack or Tower UPS (200-240VAC)
55948PX	RT8kVA 6U 3:1 Phase Rack or Tower UPS (380-415VAC)
55949PX	RT11kVA 6U 3:1 Phase Rack or Tower UPS (380-415VAC)
55943KT†	ThinkSystem RT3kVA 2U Standard UPS (200-230VAC) (2x C13 10A, 2x GB 10A, 1x C19 16A outlets)
55943LT†	ThinkSystem RT3kVA 2U Long Backup UPS (200-230VAC) (2x C13 10A, 2x GB 10A, 1x C19 16A outlets)
55946KT†	ThinkSystem RT6kVA 5U UPS (200-230VAC) (2x C13 10A outlets, 1x Terminal Block output)
5594XKT†	ThinkSystem RT10kVA 5U UPS (200-230VAC) (2x C13 10A outlets, 1x Terminal Block output)

† Only available in China and the Asia Pacific market.

For more information, see the list of Product Guides in the UPS category:
https://lenovopress.com/servers/options/ups

Power distribution units

The following table lists the power distribution units (PDUs) that are offered by Lenovo.

Table 83. Power distribution units

Part number	Feature code	Description	ANZ	ASEAN	Brazil	EET	MEA	RUCIS	WE	HTK	INDIA	JAPAN	LA	NA	PRC
0U Basic PDUs															
00YJ776	ATZY	0U 36 C13/6 C19 24A 1 Phase PDU	N	Y	Y	N	N	N	N	N	N	Y	Y	Y	N
00YJ777	ATZZ	0U 36 C13/6 C19 32A 1 Phase PDU	Y	Y	N	Y	Y	Y	Y	Y	Y	N	N	Y	Y
00YJ778	AU00	0U 21 C13/12 C19 32A 3 Phase PDU	Y	Y	N	Y	Y	Y	Y	Y	Y	N	N	Y	Y
0U Switched and Monitored PDUs															
00YJ783	AU04	0U 12 C13/12 C19 Switched and Monitored 48A 3 Phase PDU	N	N	Y	N	N	N	Y	N	N	Y	Y	Y	N
00YJ781	AU03	0U 20 C13/4 C19 Switched and Monitored 24A 1 Phase PDU	N	N	Y	N	Y	N	Y	N	N	Y	Y	Y	N
00YJ782	AU02	0U 18 C13/6 C19 Switched and Monitored 32A 3 Phase PDU	Y	Y	Y	Y	Y	Y	Y	Y	Y	N	Y	N	Y
00YJ780	AU01	0U 20 C13/4 C19 Switched and Monitored 32A 1 Phase PDU	Y	Y	Y	Y	Y	Y	Y	Y	Y	N	Y	N	Y
1U Switched and Monitored PDUs															
4PU7A81117	BNDV	1U 18 C19/C13 switched and monitored 48A 3P WYE PDU - ETL	N	N	N	N	N	N	N	N	N	N	N	Y	N
4PU7A77467	BLC4	1U 18 C19/C13 Switched and Monitored 80A 3P Delta PDU	N	N	N	N	N	N	N	N	N	Y	N	Y	N
4PU7A77469	BLC6	1U 12 C19/C13 switched and monitored 60A 3P Delta PDU	N	N	N	N	N	N	N	N	N	N	N	Y	N
4PU7A77468	BLC5	1U 12 C19/C13 switched and monitored 32A 3P WYE PDU	Y	Y	Y	Y	Y	Y	Y	Y	Y	N	Y	Y	Y
4PU7A81118	BNDW	1U 18 C19/C13 switched and monitored 48A 3P WYE PDU - CE	Y	Y	Y	Y	Y	Y	Y	Y	Y	N	Y	N	Y
1U Ultra Density Enterprise PDUs (9x IEC 320 C13 + 3x IEC 320 C19 outlets)															
71763NU	6051	Ultra Density Enterprise C19/C13 PDU 60A/208V/3PH	N	N	Y	N	N	N	N	N	N	Y	Y	Y	N
71762NX	6091	Ultra Density Enterprise C19/C13 PDU Module	Y	Y	Y	Y	Y	Y	Y	Y	Y	Y	Y	Y	Y
1U C13 Enterprise PDUs (12x IEC 320 C13 outlets)															
39M2816	6030	DPI C13 Enterprise PDU Plus Module (WW)	Y	Y	Y	Y	Y	Y	Y	Y	Y	Y	Y	Y	Y
39Y8941	6010	DPI C13 Enterprise PDU Module (WW)	Y	Y	Y	Y	Y	Y	Y	Y	Y	Y	Y	Y	Y
1U C19 Enterprise PDUs (6x IEC 320 C19 outlets)															
39Y8948	6060	DPI C19 Enterprise PDU Module (WW)	Y	Y	Y	Y	Y	Y	Y	Y	Y	Y	Y	Y	Y
1U Front-end PDUs (3x IEC 320 C19 outlets)															
39Y8938	6002	DPI Single-phase 30A/120V Front-end PDU (US)	Y	Y	Y	Y	Y	Y	Y	Y	Y	Y	Y	Y	Y
39Y8939	6003	DPI Single-phase 30A/208V Front-end PDU (US)	Y	Y	Y	Y	Y	Y	Y	Y	Y	Y	Y	Y	Y

Part number	Feature code	Description	ANZ	ASEAN	Brazil	EET	MEA	RUCIS	WE	HTK	INDIA	JAPAN	LA	NA	PRC
39Y8934	6005	DPI Single-phase 32A/230V Front-end PDU (International)	Y	Y	Y	Y	Y	Y	Y	Y	Y	Y	Y	Y	Y
39Y8940	6004	DPI Single-phase 60A/208V Front-end PDU (US)	Y	N	Y	Y	Y	Y	Y	N	N	Y	Y	Y	N
39Y8935	6006	DPI Single-phase 63A/230V Front-end PDU (International)	Y	Y	Y	Y	Y	Y	Y	Y	Y	Y	Y	Y	Y
1U NEMA PDUs (6x NEMA 5-15R outlets)															
39Y8905	5900	DPI 100-127V NEMA PDU	Y	Y	Y	Y	Y	Y	Y	Y	Y	Y	Y	Y	Y
Line cords for 1U PDUs that ship without a line cord															
40K9611	6504	4.3m, 32A/380-415V, EPDU/IEC 309 3P+N+G 3ph wye (non-US) Line Cord	Y	Y	Y	Y	Y	Y	Y	Y	Y	Y	Y	Y	Y
40K9612	6502	4.3m, 32A/230V, EPDU to IEC 309 P+N+G (non-US) Line Cord	Y	Y	Y	Y	Y	Y	Y	Y	Y	Y	Y	Y	Y
40K9613	6503	4.3m, 63A/230V, EPDU to IEC 309 P+N+G (non-US) Line Cord	Y	Y	Y	Y	Y	Y	Y	Y	Y	Y	Y	Y	Y
40K9614	6500	4.3m, 30A/208V, EPDU to NEMA L6-30P (US) Line Cord	Y	Y	Y	Y	Y	Y	Y	Y	Y	Y	Y	Y	Y
40K9615	6501	4.3m, 60A/208V, EPDU to IEC 309 2P+G (US) Line Cord	N	N	Y	N	N	N	Y	N	N	Y	Y	Y	N
40K9617	6505	4.3m, 32A/230V, Souriau UTG Female to AS/NZ 3112 (Aus/NZ) Line Cord	Y	Y	Y	Y	Y	Y	Y	Y	Y	Y	Y	Y	Y
40K9618	6506	4.3m, 32A/250V, Souriau UTG Female to KSC 8305 (S. Korea) Line Cord	Y	Y	Y	Y	Y	Y	Y	Y	Y	Y	Y	Y	Y

For more information, see the Lenovo Press documents in the PDU category:
https://lenovopress.com/servers/options/pdu

Rack cabinets

The following table lists the supported rack cabinets.

Table 84. Rack cabinets

Part number	Description
93072RX	25U Standard Rack (1000mm)
93072PX	25U Static S2 Standard Rack (1000mm)
7D6DA007WW	ThinkSystem 42U Onyx Primary Heavy Duty Rack Cabinet (1200mm)
7D6DA008WW	ThinkSystem 42U Pearl Primary Heavy Duty Rack Cabinet (1200mm)
93604PX	42U 1200mm Deep Dynamic Rack
93614PX	42U 1200mm Deep Static Rack
93634PX	42U 1100mm Dynamic Rack
93634EX	42U 1100mm Dynamic Expansion Rack
93074RX	42U Standard Rack (1000mm)
7D6EA009WW	ThinkSystem 48U Onyx Primary Heavy Duty Rack Cabinet (1200mm)
7D6EA00AWW	ThinkSystem 48U Pearl Primary Heavy Duty Rack Cabinet (1200mm)

For specifications about these racks, see the Lenovo Rack Cabinet Reference, available from:
https://lenovopress.com/lp1287-lenovo-rack-cabinet-reference

For more information, see the list of Product Guides in the Rack cabinets category:
https://lenovopress.com/servers/options/racks

KVM console options

The following table lists the supported KVM consoles.

Table 85. KVM console

Part number	Description
4XF7A73009	ThinkSystem 18.5" LCD Console (with English keyboard)

The following table lists the available KVM switches and the options that are supported with them.

Table 87. KVM switches and options

Part number	Description
KVM Console switches	
1754D2X	Global 4x2x32 Console Manager (GCM32)
1754D1X	Global 2x2x16 Console Manager (GCM16)
1754A2X	Local 2x16 Console Manager (LCM16)
1754A1X	Local 1x8 Console Manager (LCM8)
Cables for GCM and LCM Console switches	
46M5383	Virtual Media Conversion Option Gen2 (VCO2)
46M5382	Serial Conversion Option (SCO)

For more information, see the list of Product Guides in the KVM Switches and Consoles category:
http://lenovopress.com/servers/options/kvm

Lenovo Financial Services

Lenovo Financial Services reinforces Lenovo's commitment to deliver pioneering products and services that are recognized for their quality, excellence, and trustworthiness. Lenovo Financial Services offers financing solutions and services that complement your technology solution anywhere in the world.

We are dedicated to delivering a positive finance experience for customers like you who want to maximize your purchase power by obtaining the technology you need today, protect against technology obsolescence, and preserve your capital for other uses.

We work with businesses, non-profit organizations, governments and educational institutions to finance their entire technology solution. We focus on making it easy to do business with us. Our highly experienced team of finance professionals operates in a work culture that emphasizes the importance of providing outstanding customer service. Our systems, processes and flexible policies support our goal of providing customers with a positive experience.

We finance your entire solution. Unlike others, we allow you to bundle everything you need from hardware and software to service contracts, installation costs, training fees, and sales tax. If you decide weeks or months later to add to your solution, we can consolidate everything into a single invoice.

Our Premier Client services provide large accounts with special handling services to ensure these complex transactions are serviced properly. As a premier client, you have a dedicated finance specialist who manages your account through its life, from first invoice through asset return or purchase. This specialist develops an in-depth understanding of your invoice and payment requirements. For you, this dedication provides a high-quality, easy, and positive financing experience.

For your region-specific offers, please ask your Lenovo sales representative or your technology provider about the use of Lenovo Financial Services. For more information, see the following Lenovo website:

https://www.lenovo.com/us/en/landingpage/lenovo-financial-services/

Related publications and links

For more information, see these resources:

- ThinkSystem SR650 V3 product page:
  https://www.lenovo.com/us/en/p/racks/len21ts0013
- ThinkSystem SR650 V3 datasheet
  https://lenovopress.com/ds0143
- Interactive 3D Tour of the ThinkSystem SR650 V3:
  https://lenovopress.lenovo.com/lp1621-thinksystem-sr650-v3-interactive-3d-tour
- ThinkSystem SR650 V3 drivers and support
  http://datacentersupport.lenovo.com/products/servers/thinksystem/sr650v3/7d76/downloads
- Lenovo ThinkSystem SR650 V3 product publications:
  https://pubs.lenovo.com/sr650-v3/
  - User Guide, which includes:
    - System Configuration Guide
    - Hardware Maintenance Guide
  - Rack Installation Guides
  - Messages and Codes Reference
  - UEFI Manual for ThinkSystem Servers
- User Guides for options:
  https://serveroption.lenovo.com
- ServerProven hardware compatibility:
  http://serverproven.lenovo.com

Related product families

Product families related to this document are the following:

- 2-Socket Rack Servers
- ThinkSystem SR650 V3 Server

Notices

Lenovo may not offer the products, services, or features discussed in this document in all countries. Consult your local Lenovo representative for information on the products and services currently available in your area. Any reference to a Lenovo product, program, or service is not intended to state or imply that only that Lenovo product, program, or service may be used. Any functionally equivalent product, program, or service that does not infringe any Lenovo intellectual property right may be used instead. However, it is the user's responsibility to evaluate and verify the operation of any other product, program, or service. Lenovo may have patents or pending patent applications covering subject matter described in this document. The furnishing of this document does not give you any license to these patents. You can send license inquiries, in writing, to:

Lenovo (United States), Inc.
8001 Development Drive
Morrisville, NC 27560
U.S.A.
Attention: Lenovo Director of Licensing

LENOVO PROVIDES THIS PUBLICATION ”AS IS” WITHOUT WARRANTY OF ANY KIND, EITHER EXPRESS OR IMPLIED, INCLUDING, BUT NOT LIMITED TO, THE IMPLIED WARRANTIES OF NON-INFRINGEMENT, MERCHANTABILITY OR FITNESS FOR A PARTICULAR PURPOSE. Some jurisdictions do not allow disclaimer of express or implied warranties in certain transactions, therefore, this statement may not apply to you.

This information could include technical inaccuracies or typographical errors. Changes are periodically made to the information herein; these changes will be incorporated in new editions of the publication. Lenovo may make improvements and/or changes in the product(s) and/or the program(s) described in this publication at any time without notice.

The products described in this document are not intended for use in implantation or other life support applications where malfunction may result in injury or death to persons. The information contained in this document does not affect or change Lenovo product specifications or warranties. Nothing in this document shall operate as an express or implied license or indemnity under the intellectual property rights of Lenovo or third parties. All information contained in this document was obtained in specific environments and is presented as an illustration. The result obtained in other operating environments may vary. Lenovo may use or distribute any of the information you supply in any way it believes appropriate without incurring any obligation to you.

Any references in this publication to non-Lenovo Web sites are provided for convenience only and do not in any manner serve as an endorsement of those Web sites. The materials at those Web sites are not part of the materials for this Lenovo product, and use of those Web sites is at your own risk. Any performance data contained herein was determined in a controlled environment. Therefore, the result obtained in other operating environments may vary significantly. Some measurements may have been made on development-level systems and there is no guarantee that these measurements will be the same on generally available systems. Furthermore, some measurements may have been estimated through extrapolation. Actual results may vary. Users of this document should verify the applicable data for their specific environment.

© Copyright Lenovo 2023. All rights reserved.

This document, LP1601, was created or updated on March 1, 2023.

Send us your comments in one of the following ways:

- Use the online Contact us review form found at:
  https://lenovopress.lenovo.com/LP1601
- Send your comments in an e-mail to:
  comments@lenovopress.com

This document is available online at https://lenovopress.lenovo.com/LP1601.

Trademarks

Lenovo and the Lenovo logo are trademarks or registered trademarks of Lenovo in the United States, other countries, or both. A current list of Lenovo trademarks is available on the Web at https://www.lenovo.com/us/en/legal/copytrade/.

The following terms are trademarks of Lenovo in the United States, other countries, or both:
Lenovo®
AnyBay®
Bootable Media Creator
Flex System
Lenovo Services
ServerProven®
System x®
ThinkShield®
ThinkServer®
ThinkSystem®
TopSeller
UpdateXpress System Packs
XClarity®

The following terms are trademarks of other companies:

Intel®, Intel Optane™, and Xeon® are trademarks of Intel Corporation or its subsidiaries.

Linux® is the trademark of Linus Torvalds in the U.S. and other countries.

ActiveX®, Hyper-V®, Microsoft®, PowerShell, Windows PowerShell®, Windows Server®, and Windows® are trademarks of Microsoft Corporation in the United States, other countries, or both.

SPECpower® is a trademark of the Standard Performance Evaluation Corporation (SPEC).

Other company, product, or service names may be trademarks or service marks of others.